PCB LED Indicators

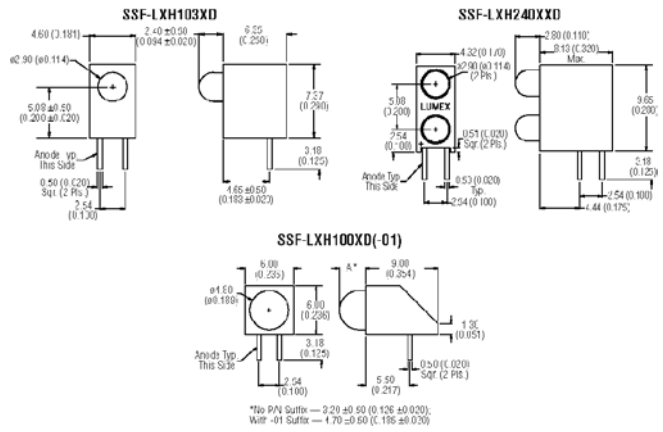

T3 mm, Single LED, Standard

Stock No.	Mfr.'s Type	Emitted Color	Wavelength Peak (nm)	Lens Color	IV mCD @ /mA*	Viewing Angle	EACH 1-99	EACH 100-999	EACH 1000-Up
670-1083	SSF-LXH103GD	Green	565	Green Diff.	15/20	80	**.21**	**.18**	**.15**
670-1084	SSF-LXH103ID	Red	635	Red Diff.	30/20	60	**.21**	**.18**	**.15**
670-1085	SSF-LXH103YD	Yellow	585	Yellow Diff.	15/20	80	**.21**	**.18**	**.15**

T3 mm, Single LED, Low Current

670-1086	SSF-LXH103LGD	Green	565	Green Diff.	15/2	80	**.22**	**.19**	**.15**
670-1087	SSF-LXH103LID	Red	635	Red Diff.	40/2	60	**.28**	**.26**	**.23**
670-1088	SSF-LXH103LYD	Yellow	585	Yellow Diff.	15/2	80	**.22**	**.19**	**.15**

T3 mm, Dual Tower LED

670-1089	SSF-LXH240GGD	Green	565/565	Green Diff.	15/20	80	**.49**	**.42**	**.35**
670-1090	SSF-LXH240IID	Red	635/635	Red Diff.	15/20	80	**.49**	**.42**	**.35**
670-1091	SSF-LXH240YYD	Yellow	585/585	Yellow Diff.	15/20	80	**.49**	**.42**	**.35**

T5 mm, Single LED, Standard

670-1092	SSF-LXH100GD	Green	565	Green Diff.	30/20	60	**.28**	**.25**	**.22**
670-1093	SSF-LXH100ID	Red	635	Red Diff.	40/20	60	**.25**	**.22**	**.18**
670-1094	SSF-LXH100YD	Yellow	585	Yellow Diff.	30/20	60	**.25**	**.22**	**.18**

T5 mm, Single LED, Long Protrusion

670-1095	SSF-LXH100GD-01	Green	565	Green Diff.	30/20	60	**.22**	**.19**	**.16**
670-1096	SSF-LXH100ID-01	Red	635	Red Diff.	40/20	60	**.24**	**.21**	**.17**
670-1097	SSF-LXH100YD-01	Yellow	585	Yellow Diff.	30/20	60	**.24**	**.21**	**.17**

*Per segment

LED Displays

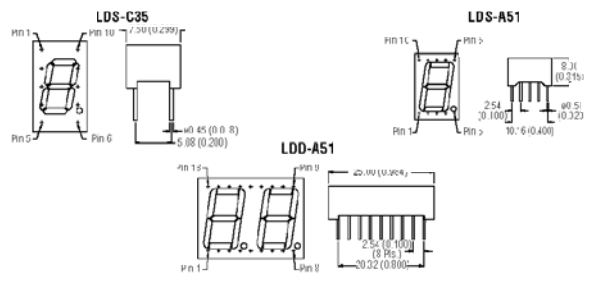

T3 mm, Size LED Lamps

Stock No.	Mfr.'s Type	Emitted Color	Wavelength Peak (nm)	Face/Segment (Off Condition)	IV mCD @ 10 µA	Common Pin	EACH 1-99	EACH 100-999	EACH 1000-Up
670-1126	LDS-A352RI	Green	565	Grey/White	2800	Anode	**1.76**	**1.53**	**1.25**
670-1127	LDS-A356RI	Super Red	660	Grey/White	7000	Anode	**1.92**	**1.72**	**1.65**
670-1128	LDS-C352RI	Green	565	Grey/White	3350	Cathode	**1.13**	**.98**	**.80**
670-1129	LDS-C356RI	Super Red	660	Grey/White	7000	Cathode	**1.75**	**1.59**	**1.41**

0.56", Single Digit

670-0130	LDS-A512RI	Green	565	Grey/White	2250	Anode	**1.26**	**1.10**	**.89**
670-0131	LDS-A514RI	Red	635	Grey/White	3900	Anode	**1.15**	**1.00**	**.81**
670-0132	LDS-A516RI	Super Red	660	Grey/White	12000	Anode	**2.35**	**2.04**	**1.66**

0.56", Dual Digit

670-0133	LDD-A512RI	Green	565	Grey/White	3900	Anode	**1.77**	**1.54**	**1.25**
670-0135	LDD-A514RI	Red	635	Grey/White	3900	Anode	**1.70**	**1.47**	**1.20**

Panel Mount LED Indicators

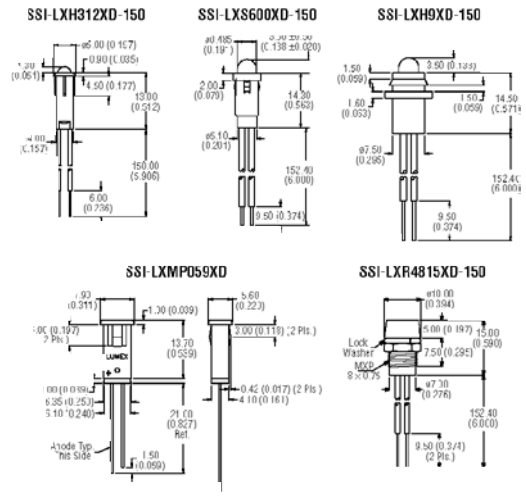

T3 mm, LED Indicators, Plastic

Stock No.	Mfr.'s Type*	Emitted Color	Wavelength Peak (nm)	Lens Color	IV mCD @ 20 mA	Viewing Angle	EACH 1-99	EACH 100-999	EACH 1000-Up
670-1099	SSI-LXH312GD-150	Green	565	Green Diff.	10	80	**.76**	**.69**	**.58**
670-1100	SSI-LXH312YD-150	Yellow	585	Yellow Diff.	10	80	**.60**	**.52**	**.42**
670-1102	SSI-LXH312SRD-150	Super Red	660	Red Diff.	70	80	**.76**	**.66**	**.54**

Push-In Panel Mount, 1/4" Round Hole

670-1103	SSI-LXH600GD-150	Green	565	Green Diff.	30	60	**.60**	**.52**	**.42**
670-1104	SSI-LXH600YD-150	Yellow	585	Yellow Diff.	30	60	**.60**	**.52**	**.42**
670-1105	SSI-LXH600SRD-150	Super Red	660	Red Diff.	100	60	**.80**	**.69**	**.56**

T5 mm, Rear of Panel Installation

670-1106	SSI-LXH9GD-150	Green	565	Green Diff.	30	60	**2.69**	**2.48**	**2.27**
670-1107	SSI-LXH9YD-150	Yellow	585	Yellow Diff.	30	60	**2.69**	**2.60**	**2.27**
670-1108	SSI-LXH9SRD-150	Super Red	660	Red Diff.	80	60	**1.72**	**1.48**	**1.20**

2 × 5 Rectangular Assembly

670-1109	SSI-LXMP059GD	Green	565	Green Diff.	10	80	**.47**	**.41**	**.33**
670-1110	SSI-LXMP059ID	Red	635	Red Diff.	10	80	**.47**	**.41**	**.33**
670-1111	SSI-LXMP059YD	Yellow	585	Yellow Diff.	10	80	**.47**	**.41**	**.33**

T5 mm, Metal Reflector Indicator

670-1112	SSI-LXR4815GD-150	Green	565	Green Diff.	20	80	**2.25**	**2.08**	**1.85**
670-1113	SSI-LXR4815YD-150	Yellow	585	Yellow Diff.	20	80	**1.79**	**1.54**	**1.24**
670-1114	SSI-LXR4815SRD-150	Super Red	660	Red Diff.	40	60	**2.19**	**1.88**	**1.52**

*-150 indicates 6" leads

Laser Diodes

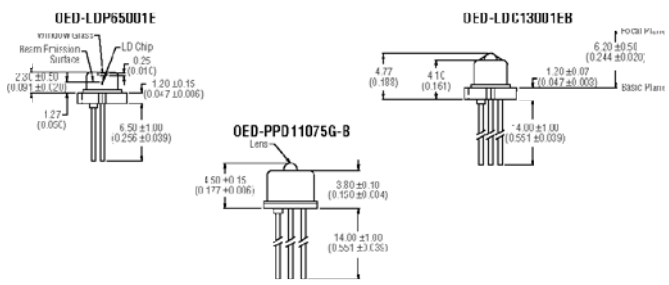

Emitters

Stock No.	Mfr.'s Type	Output Power (mW)	Wavelength Typ. λnm	Current (mA) Ith	Iop	Operating Voltage (V)	EACH 1-24	EACH 25-Up
670-0140	OED-LDP65001E	5	650	20	35	2.2	**6.23**	**5.99**
670-0141	OED-LDC13001EB	10	1310	12	—	1.2	**70.99**	**68.27**
670-0142	OED-LDC15001EB	5	1550	8	—	1.2	**155.84**	**149.85**

Detectors

Stock No.	Mfr.'s Type	Reverse Voltage (V)	Forward Current (mA)	Detection Range Typ. (nm)	Cutoff Frequency (GHz)	Rise/Fall Time (ns)	EACH 1-24	EACH 25-Up
670-0143	OED-PPD11075G-B	25	2	1310	2	0.2	**38.10**	**36.63**