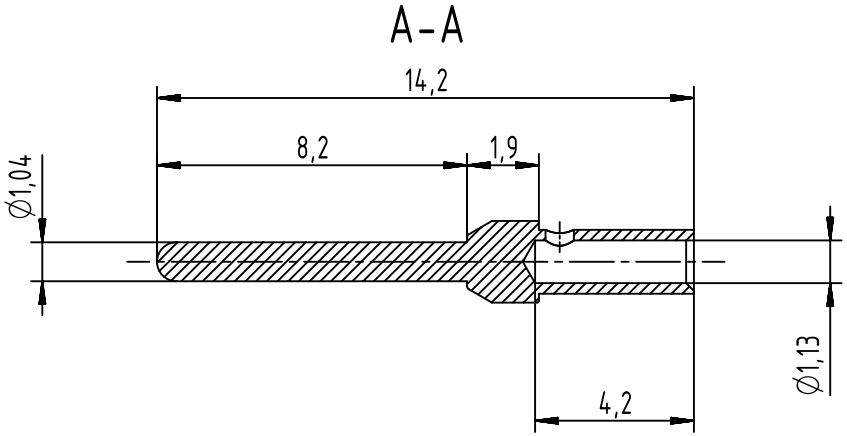

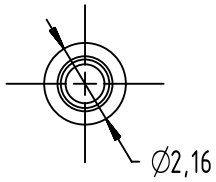

Crimping of AWG 20-24:

hand tool: 09 99 000 0501
locator: 09 99 000 0531

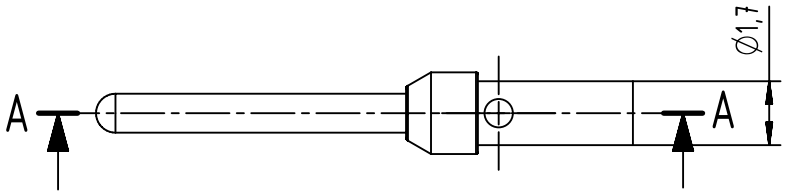

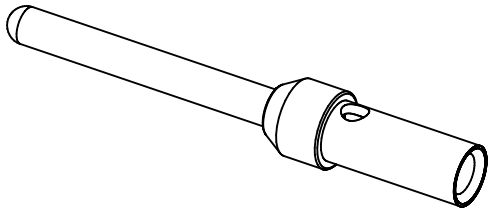

09 67 000 8576 580	PL1	5000
09 67 000 8576	PL1	100
Part number	Gold plating (over nickel)	Bulk packaging

All Dimensions in mm
Original Size DIN A4

All rights reserved

Department EC PD - FR

HARTING Electronics GmbH
D-32339 Espelkamp

Scale	Free size tol.	Ref.
5:1		Sub.

Created by	Inspected by	Standardisation	Date	State
DOUGE	BAGDIKIAN	HOFFMANN	2014-01-30	Final Release

Title: D-Sub turned AWG 20-24 male crimp contact

Doc-Key / ECM-Nr.
100562538/UGD/001/A
500000070252

Type	Number	Rev.	Page
TB	09670008576	A	1/1

A4