FEMTOCLOCKS™ CRYSTAL-TO-3.3V, 2.5V LVPECL CLOCK GENERATOR

ICS843022I-48

General Description

The ICS843022I-48 is a Fibre Channel Clock Generator. The ICS843022I-48 uses a 25MHz crystal to synthesize 125MHz or 75MHz. The ICS843022I-48 has excellent phase jitter performance, over the 12kHz – 20MHz integration range. The ICS843022I-48 is packaged in a small 8-pin TSSOP, making it ideal for use in systems with limited board space.

Features

- One differential 3.3V or 2.5V LVPECL output
- Crystal oscillator interface designed for 25MHz, 18pF parallel resonant crystal
- Output frequencies: 125MHz or 75MHz (selectable)
- RMS phase jitter @ 125MHz, using a 25MHz crystal (12kHz - 20MHz): 0.72ps (typical) @ 3.3V
- Full 3.3V and 2.5V operating supply
- -40°C to 85°C ambient operating temperature
- Available in both standard (RoHS 5) and lead-free (RoHS 6) packages

Function Table

Inputs			Output Frequencies (with a 25MHz crystal)
FREQ_SEL	M Divide	N Divide	
0	÷20	÷4	125MHz (default)
1	÷24	÷8	75MHz

Block Diagram

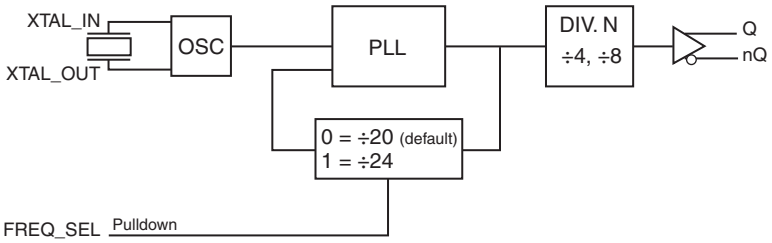

Pin Assignment

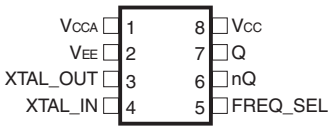

ICS843022I-48

8-Lead TSSOP

4.40mm x 3.0mm x 0.925mm package body

G Package

Top View

TABLE 1. PIN DESCRIPTIONS

Number	Name	Type		Description
1	V_{CCA}	Power		Analog supply pin.
2	V_{EE}	Power		Negative supply pin.
3, 4	XTAL_OUT, XTAL_IN	Input		Crystal oscillator interface. XTAL_IN is the input, XTAL_OUT is the output.
5	FREQ_SEL	Input	Pulldown	Frequency select pin. LVCMOS/LVTTL interface levels.
6, 7	nQ, Q	Output		Differential clock output. LVPECL interface levels.
8	V_{CC}	Power		Core supply pin.

NOTE: *Pulldown* refers to internal input resistors. See Table 2, Pin Characteristics, for typical values.

TABLE 2. PIN CHARACTERISTICS

Symbol	Parameter	Test Conditions	Minimum	Typical	Maximum	Units
C_{IN}	Input Capacitance			4		pF
$R_{PULLDOWN}$	Input Pulldown Resistor			51		kΩ

Absolute Maximum Ratings

Supply Voltage, V_{CC}	4.6V
Inputs, V_I	-0.5V to V_{CC} + 0.5V
Outputs, I_O	
Continuous Current	50mA
Surge Current	100mA
Package Thermal Impedance, θ_{JA}	101.7°C/W (0 mps)
Storage Temperature, T_{STG}	-65°C to 150°C

NOTE: Stresses beyond those listed under Absolute Maximum Ratings may cause permanent damage to the device. These ratings are stress specifications only. Functional operation of product at these conditions or any conditions beyond those listed in the *DC Characteristics* or *AC Characteristics* is not implied. Exposure to absolute maximum rating conditions for extended periods may affect product reliability.

Table 3A. Power Supply DC Characteristics, $V_{CC} = V_{CCA} = 3.3V±5\%$, T_A = -40°C to 85°C

Symbol	Parameter	Test Conditions	Minimum	Typical	Maximum	Units
V_{CC}	Core Supply Voltage		3.135	3.3	3.465	V
V_{CCA}	Analog Supply Voltage		V_{CC} – 0.10	3.3	V_{CC}	V
I_{CCA}	Analog Supply Current				10	mA
I_{EE}	Power Supply Current				80	mA

Table 3B. Power Supply DC Characteristics, $V_{CC} = V_{CCA} = 2.5V±5\%$, T_A = -40°C to 85°C

Symbol	Parameter	Test Conditions	Minimum	Typical	Maximum	Units
V_{CC}	Core Supply Voltage		2.375	2.5	2.625	V
V_{CCA}	Analog Supply Voltage		V_{CC} – 0.10	2.5	V_{CC}	V
I_{CCA}	Analog Supply Current				10	V
I_{EE}	Power Supply Current				75	mA

Table 3C. LVCMOS/LVTTL DC Characteristics, $V_{CC} = V_{CCA} = 3.3V±5\%$, T_A = -40°C to 85°C

Symbol	Parameter	Test Conditions	Minimum	Typical	Maximum	Units
V_{IH}	Input High Voltage		1.3		V_{CC} + 0.3	V
V_{IL}	Input Low Voltage		-0.3		0.7	V
I_{IH}	Input High Current	$V_{CC} = V_{IN} = 3.465V$			150	µA
I_{IL}	Input Low Current	$V_{CC} = 3.465V$, $V_{IN} = 0V$	-5			µA

Table 3D. LVCMOS/LVTTL DC Characteristics, $V_{CC} = V_{CCA} = 2.5V±5\%$, T_A = -40°C to 85°C

Symbol	Parameter	Test Conditions	Minimum	Typical	Maximum	Units
V_{IH}	Input High Voltage		1.1		V_{CC} + 0.3	V
V_{IL}	Input Low Voltage		-0.3		0.5	V
I_{IH}	Input High Current	$V_{CC} = V_{IN} = 2.625V$			150	µA
I_{IL}	Input Low Current	$V_{CC} = 2.625V$, $V_{IN} = 0V$	-5			µA

TABLE 3E. LVPECL DC CHARACTERISTICS, $V_{CC} = V_{CCA} = 3.3V±5\%$ OR $2.5V±5\%$, $T_A = -40°C$ TO $85°C$

Symbol	Parameter	Test Conditions	Minimum	Typical	Maximum	Units
V_{OH}	Output High Voltage; NOTE 1		V_{CC} - 1.4		V_{CC} - 0.9	V
V_{OL}	Output Low Voltage; NOTE 1		V_{CC} - 2.0		V_{CC} - 1.7	V
V_{SWING}	Peak-to-Peak Output Voltage Swing		0.6		1.0	V

NOTE 1: Outputs terminated with 50Ω to V_{CC} - 2V.

TABLE 4. CRYSTAL CHARACTERISTICS

Parameter	Test Conditions	Minimum	Typical	Maximum	Units
Mode of Oscillation		Fundamental			
Frequency			25		MHz
Equivalent Series Resistance (ESR)				50	Ω
Shunt Capacitance				7	pF
Drive Level				100	µW

NOTE: It is not recommended to overdrive the crystal input with an external clock.

TABLE 5A. AC CHARACTERISTICS, $V_{CC} = V_{CCA} = 3.3V±5\%$, $T_A = -40°C$ TO $85°C$

Symbol	Parameter	Test Conditions	Minimum	Typical	Maximum	Units
f_{OUT}	Output Frequency			125		MHz
				75		MHz
$t_{jit}(Ø)$	RMS Phase Jitter; NOTE 1	125MHz, Integration Range: 12kHz - 20MHz		0.72		ps
		75MHz, Integration Range: 900kHz - 7.5MHz		0.51		ps
t_R / t_F	Output Rise/Fall Time	20% to 80%	250		450	ps
odc	Output Duty Cycle		48		52	%

NOTE 1: Please refer to the Phase Noise Plot.

TABLE 5B. AC CHARACTERISTICS, $V_{CC} = V_{CCA} = 2.5V±5\%$, $T_A = -40°C$ TO $85°C$

Symbol	Parameter	Test Conditions	Minimum	Typical	Maximum	Units
f_{OUT}	Output Frequency			125		MHz
				75		MHz
$t_{jit}(Ø)$	RMS Phase Jitter; NOTE 1	125MHz, Integration Range: 12kHz - 20MHz		0.66		ps
		75MHz, Integration Range: 900kHz - 7.5MHz		0.60		ps
t_R / t_F	Output Rise/Fall Time	20% to 80%	250		450	ps
odc	Output Duty Cycle		48		52	%

NOTE 1: Please refer to the Phase Noise Plot.

Typical Phase Noise at 125MHz @ 3.3V

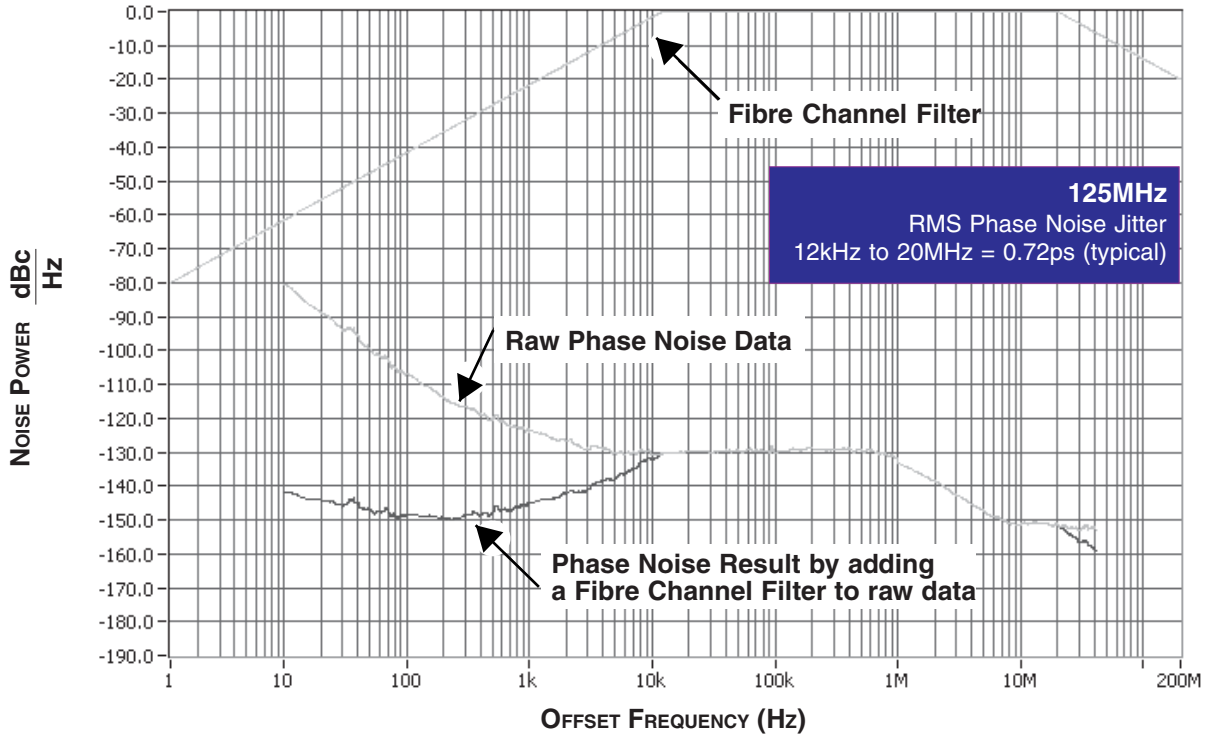

Typical Phase Noise at 75MHz @ 3.3V

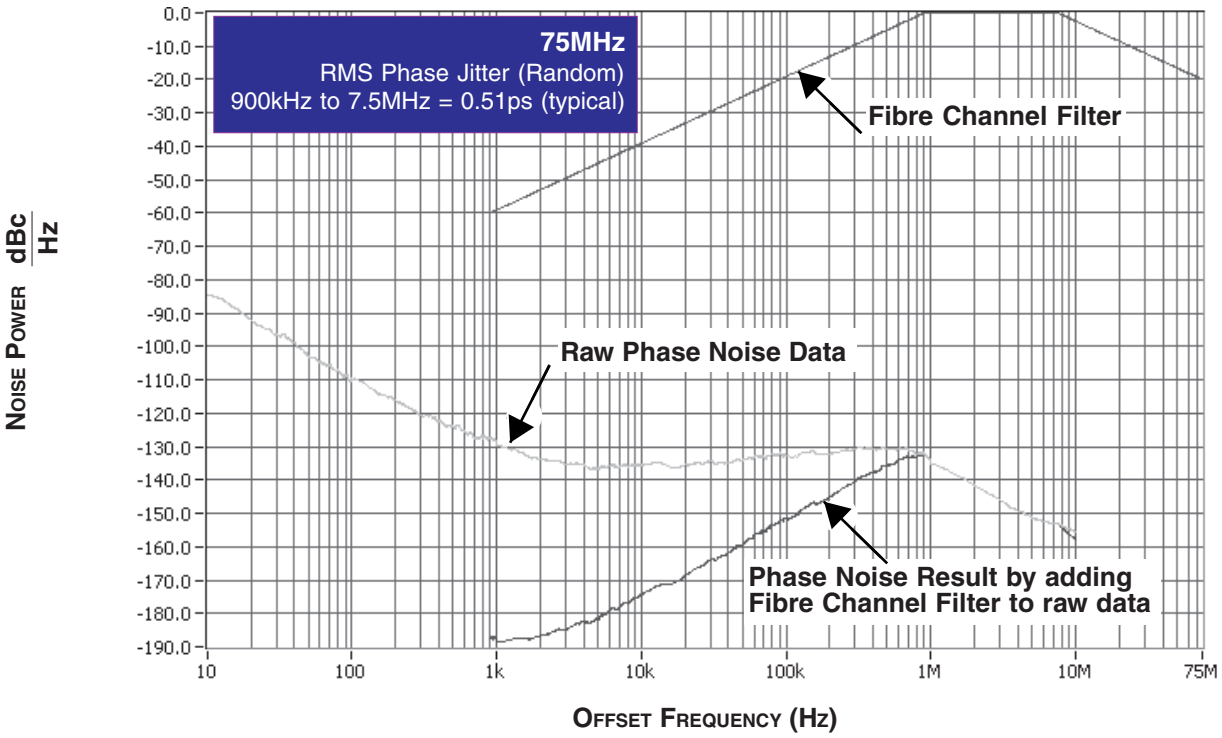

PARAMETER MEASUREMENT INFORMATION

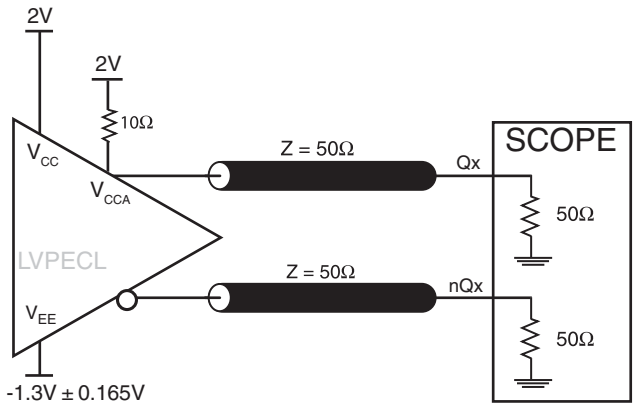

3.3V OUTPUT LOAD AC TEST CIRCUIT

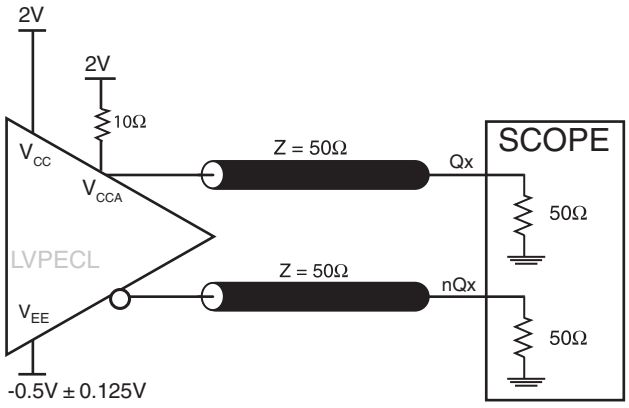

2.5V OUTPUT LOAD AC TEST CIRCUIT

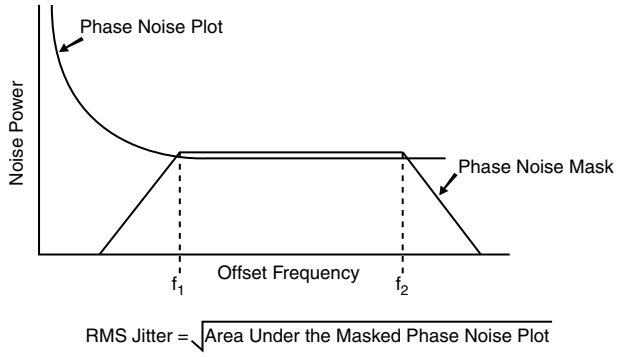

OUTPUT DUTY CYCLE/PULSE WIDTH/PERIOD

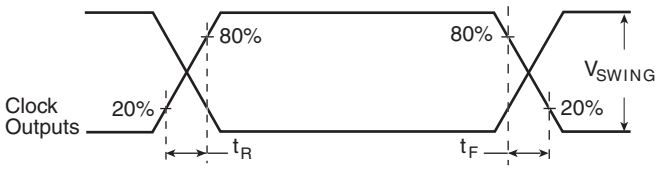

OUTPUT RISE/FALL TIME

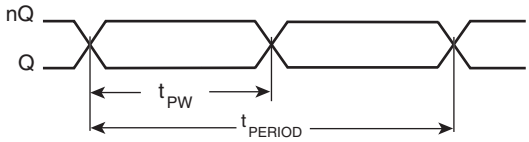

$$odc = \frac{t_{PW}}{t_{PERIOD}} \times 100\%$$

OUTPUT DUTY CYCLE/PULSE WIDTH/PERIOD

APPLICATION INFORMATION

POWER SUPPLY FILTERING TECHNIQUES

As in any high speed analog circuitry, the power supply pins are vulnerable to random noise. The ICS843022I-48 provides separate power supplies to isolate any high switching noise from the outputs to the internal PLL. V_{CC} and V_{CCA} should be individually connected to the power supply plane through vias, and bypass capacitors should be used for each pin. To achieve optimum jitter performance, power supply isolation is required. *Figure 1* illustrates how a 10Ω resistor along with a 10µF and a .01µF bypass capacitor should be connected to each V_{CCA} pin.

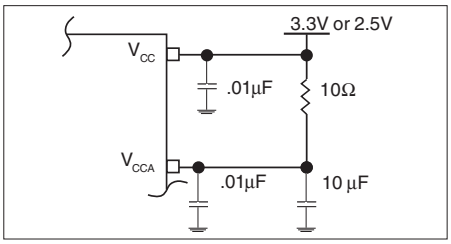

FIGURE 1. POWER SUPPLY FILTERING

CRYSTAL INPUT INTERFACE

The ICS843022I-48 has been characterized with 18pF parallel resonant crystals. The capacitor values, C1 and C2, shown in *Figure 2* below were determined using a 25MHz, 18pF parallel resonant crystal and were chosen to minimize the ppm error. The optimum C1 and C2 values can be slightly adjusted for different board layouts.

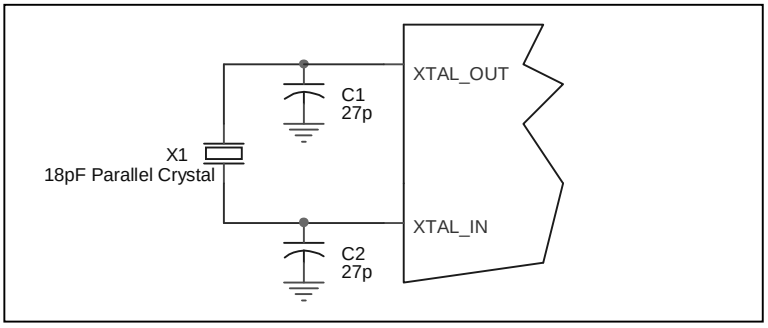

FIGURE 2. CRYSTAL INPUT INTERFACE

TERMINATION FOR 3.3V LVPECL OUTPUT

The clock layout topology shown below is a typical termination for LVPECL outputs. The two different layouts mentioned are recommended only as guidelines.

FOUT and nFOUT are low impedance follower outputs that generate ECL/LVPECL compatible outputs. Therefore, terminating resistors (DC current path to ground) or current sources must be used for functionality. These outputs are designed to drive 50Ω transmission lines. Matched impedance techniques should be used to maximize operating frequency and minimize signal distortion. *Figures 4A and 4B* show two different layouts which are recommended only as guidelines. Other suitable clock layouts may exist and it would be recommended that the board designers simulate to guarantee compatibility across all printed circuit and clock component process variations.

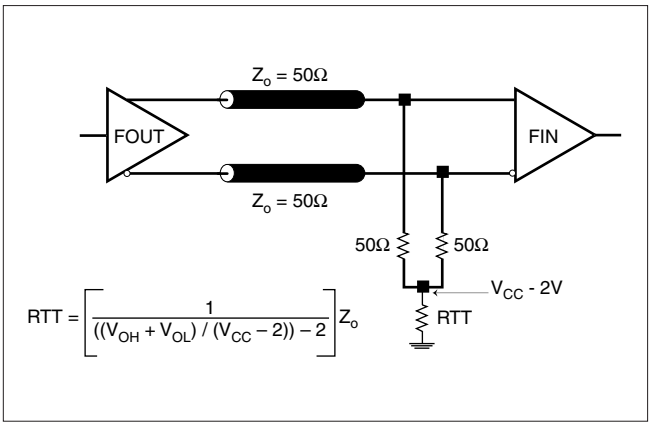

FIGURE 4A. LVPECL OUTPUT TERMINATION

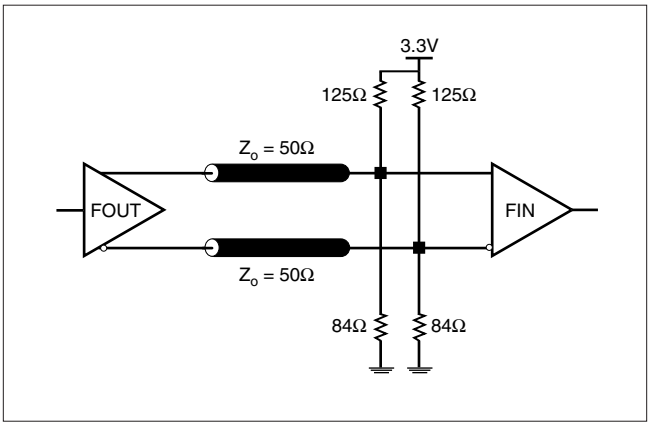

FIGURE 4B. LVPECL OUTPUT TERMINATION

TERMINATION FOR 2.5V LVPECL OUTPUT

Figure 5A and *Figure 5B* show examples of termination for 2.5V LVPECL driver. These terminations are equivalent to terminating 50Ω to V_{CC} - 2V. For V_{CC} = 2.5V, the V_{CC} - 2V is very close to ground level. The R3 in Figure 5B can be eliminated and the termination is shown in *Figure 5C.*

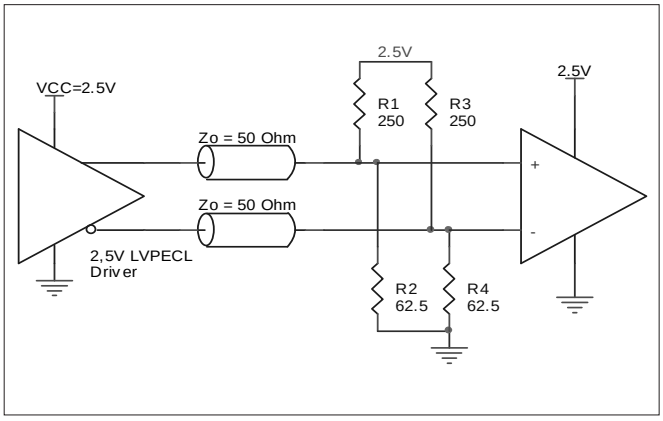

FIGURE 5A. 2.5V LVPECL DRIVER TERMINATION EXAMPLE

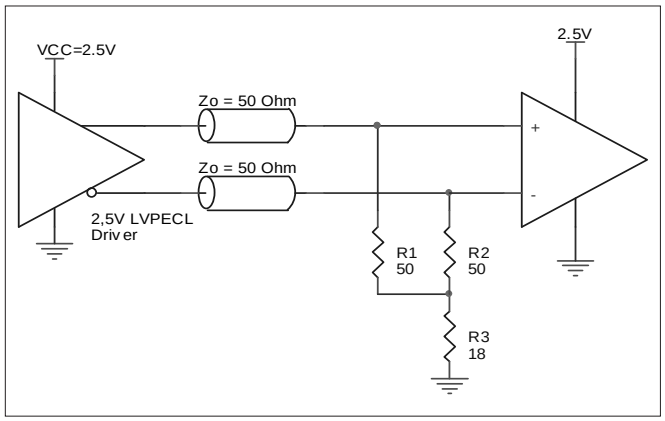

FIGURE 5B. 2.5V LVPECL DRIVER TERMINATION EXAMPLE

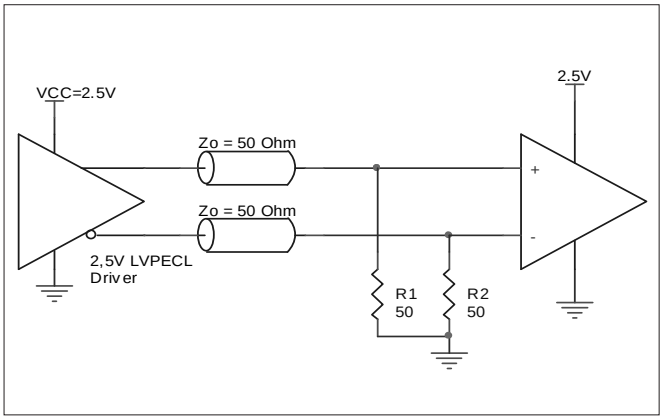

FIGURE 5C. 2.5V LVPECL TERMINATION EXAMPLE

POWER CONSIDERATIONS

This section provides information on power dissipation and junction temperature for the ICS843022I-48.
Equations and example calculations are also provided.

1. Power Dissipation.
The total power dissipation for the ICS843022I-48 is the sum of the core power plus the power dissipated in the load(s).
The following is the power dissipation for V_{CC} = 3.3V + 5% = 3.465V, which gives worst case results.
NOTE: Please refer to Section 3 for details on calculating power dissipated in the load.

- Power $(core)_{MAX}$ = V_{CC_MAX} * I_{EE_MAX} = 3.465V * 80mA = **277.2mW**
- Power $(outputs)_{MAX}$ = **30mW/Loaded Output pair**

Total Power$_{_MAX}$ (3.465V, with all outputs switching) = 277.2mW + 30mW = **307.2mW**

2. Junction Temperature.
Junction temperature, Tj, is the temperature at the junction of the bond wire and bond pad and directly affects the reliability of the device. The maximum recommended junction temperature is 125°C.

The equation for Tj is as follows: $Tj = \theta_{JA} * Pd_total + T_A$

Tj = Junction Temperature

θ_{JA} = Junction-to-Ambient Thermal Resistance

Pd_total = Total Device Power Dissipation (example calculation is in section 1 above)

T_A = Ambient Temperature

In order to calculate junction temperature, the appropriate junction-to-ambient thermal resistance θ_{JA} must be used. Assuming a moderate air flow of 1 meter per second and a multi-layer board, the appropriate value is 90.5°C/W per Table 6 below.

Therefore, Tj for an ambient temperature of 85°C with all outputs switching is:
85°C + 0.307W * 125.5°C/W = 123.5°C. This is below the limit of 125°C.

This calculation is only an example. Tj will obviously vary depending on the number of loaded outputs, supply voltage, air flow, and the type of board (single layer or multi-layer).

TABLE 6. THERMAL RESISTANCE θ_{JA} FOR 8-PIN TSSOP, FORCED CONVECTION

θ_{JA} by Velocity (Meters per Second)			
	0	**1**	**2.5**
Multi-Layer PCB, JEDEC Standard Test Boards	129.5°C/W	125.5°C/W	123.5°C/W

3. Calculations and Equations.
The purpose of this section is to derive the power dissipated into the load.
LVPECL output driver circuit and termination are shown in *Figure 6.*

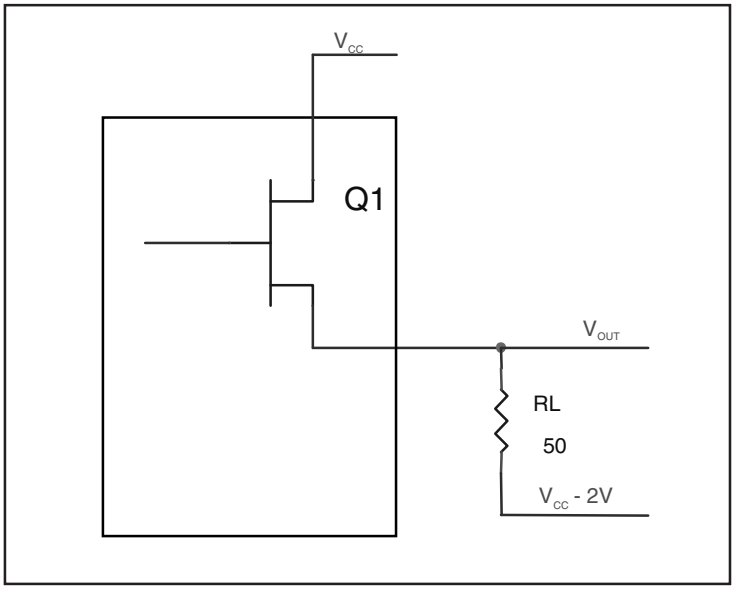

FIGURE 6. LVPECL DRIVER CIRCUIT AND TERMINATION

To calculate worst case power dissipation into the load, use the following equations which assume a 50Ω load, and a termination voltage of V_{CC} - 2V.

- For logic high, $V_{OUT} = V_{OH_MAX} = \mathbf{V_{CC_MAX} - 0.9V}$

  $(V_{CCO_MAX} - V_{OH_MAX}) = \mathbf{0.9V}$

- For logic low, $V_{OUT} = V_{OL_MAX} = \mathbf{V_{CC_MAX} - 1.7V}$

  $(V_{CCO_MAX} - V_{OL_MAX}) = \mathbf{1.7V}$

Pd_H is power dissipation when the output drives high.
Pd_L is the power dissipation when the output drives low.

$Pd_H = [(V_{OH_MAX} – (V_{CC_MAX} - 2V))/R_L] * (V_{CC_MAX} - V_{OH_MAX}) = [(2V - (V_{CC_MAX} - V_{OH_MAX}))/R_L] * (V_{CC_MAX} - V_{OH_MAX}) =$
$[(2V - 0.9V)/50\Omega] * 0.9V =$ **19.8mW**

$Pd_L = [(V_{OL_MAX} – (V_{CC_MAX} - 2V))/R_L] * (V_{CC_MAX} - V_{OL_MAX}) = [(2V - (V_{CC_MAX} - V_{OL_MAX}))/R_L] * (V_{CC_MAX} - V_{OL_MAX}) =$
$[(2V - 1.7V)/50\Omega] * 1.7V =$ **10.2mW**

Total Power Dissipation per output pair = Pd_H + Pd_L = **30mW**

RELIABILITY INFORMATION

TABLE 7. θ_{JA} VS. AIR FLOW TABLE FOR 8 LEAD TSSOP

θ_{JA} by Velocity (Meters per Second)			
	0	**1**	**2.5**
Multi-Layer PCB, JEDEC Standard Test Boards	129.5°C/W	125.5°C/W	123.5°C/W

TRANSISTOR COUNT

The transistor count for ICS843022I-48 is: 2086

PACKAGE OUTLINE - G SUFFIX FOR 8 LEAD TSSOP

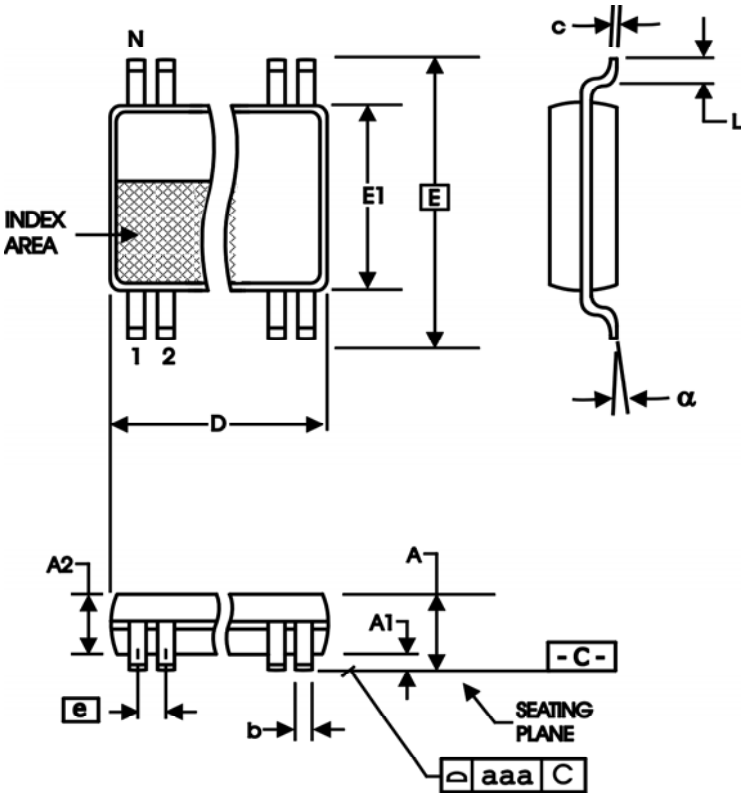

TABLE 8. PACKAGE DIMENSIONS

SYMBOL	Millimeters	
	Minimum	Maximum
N	8	
A	--	1.20
A1	0.05	0.15
A2	0.80	1.05
b	0.19	0.30
c	0.09	0.20
D	2.90	3.10
E	6.40 BASIC	
E1	4.30	4.50
e	0.65 BASIC	
L	0.45	0.75
α	0°	8°
aaa	--	0.10

Reference Document: JEDEC Publication 95, MO-153

TABLE 9. ORDERING INFORMATION

Part/Order Number	Marking	Package	Shipping Packaging	Temperature
ICS843022AGI-48	2AI48	8 lead TSSOP	tube	-40°C to 85°C
ICS843022AGI-48T	2AI48	8 lead TSSOP	tape & reel	-40°C to 85°C
ICS843022AGI-48LF	AI48L	8 lead "Lead-Free" TSSOP	tube	-40°C to 85°C
ICS843022AGI-48LFT	AI48L	8 lead "Lead-Free" TSSOP	tape & reel	-40°C to 85°C

NOTE: Parts that are ordered with an "LF" suffix to the part number are the Pb-Free configuration and are RoHS compliant.

REVISION HISTORY SHEET				
Rev	**Table**	**Page**	**Description of Change**	**Date**
A	T4 T9	1 4 7 14	Deleted HiPerClockS references. Crystal Characteristics Table - added note. Deleted application note, LVCMOS to XTAL Interface. Deleted quantity from tape and reel	9/22/12

Innovate with IDT and accelerate your future networks. Contact:

www.IDT.com

For Sales
800-345-7015
408-284-8200
Fax: 408-284-2775

For Tech Support
netcom@idt.com
480-763-2056

Corporate Headquarters
Integrated Device Technology, Inc.
6024 Silver Creek Valley Road
San Jose, CA 95138
United States
800 345 7015
+408 284 8200 (outside U.S.)

Asia Pacific and Japan
Integrated Device Technology
Singapore (1997) Pte. Ltd.
Reg. No. 199707558G
435 Orchard Road
#20-03 Wisma Atria
Singapore 238877
+65 6 887 5505

Europe
IDT Europe, Limited
321 Kingston Road
Leatherhead, Surrey
KT22 7TU
England
+44 (0) 1372 363 339
Fax: +44 (0) 1372 378851

www.IDT.com

© 2012 Integrated Device Technology, Inc. All rights reserved. Product specifications subject to change without notice. IDT, the IDT logo, ICS and HiPerClockS are trademarks of Integrated Device Technology, Inc. Accelerated Thinking is a service mark of Integrated Device Technology, Inc. All other brands, product names and marks are or may be trademarks or registered trademarks used to identify products or services of their respective owners.
Printed in USA