FEMTOCLOCK™ CRYSTAL/LVCMOS-TO-LVDS/LVCMOS FREQUENCY SYNTHESIZER

ICS8440259-05

General Description

The ICS8440259-05 is a 9 output synthesizer optimized to generate Gigabit and 10 Gigabit Ethernet clocks and is a member of the HiPerClockS™ family of high performance clock solutions from IDT. Using a 25MHz, 18pF parallel resonant crystal, the device will generate 125MHz and 3.90625MHz clocks with mixed LVDS and LVCMOS/LVTTL output levels. The ICS8440259-05 uses IDT's 3rd generations low phase noise VCO technology and can achieve <1ps typical rms phase jitter, easily meeting Ethernet jitter requirements. The ICS8440259-05 is packaged in a small, 32-pin VFQFN package that is optimum for applications with space limitations.

Features

- Five differential LVDS outputs at 125MHz
  Three LVCMOS/LVTTL single-ended outputs at 125MHz
  One LVCMOS/LVTTL single-ended output at 3.90625MHz
- Selectable crystal oscillator interface or LVCMOS/LVTTL single-ended input and PLL bypass from a single select pin
- VCO range: 490MHz - 680MHz
- RMS phase jitter @ 125MHz, using a 25MHz crystal (1.875MHz - 20MHz): 0.43ps (typical)
- Full 3.3V supply mode
- 0°C to 70°C ambient operating temperature
- Available in both standard (RoHS 5) and lead-free (RoHS6) packages

Block Diagram

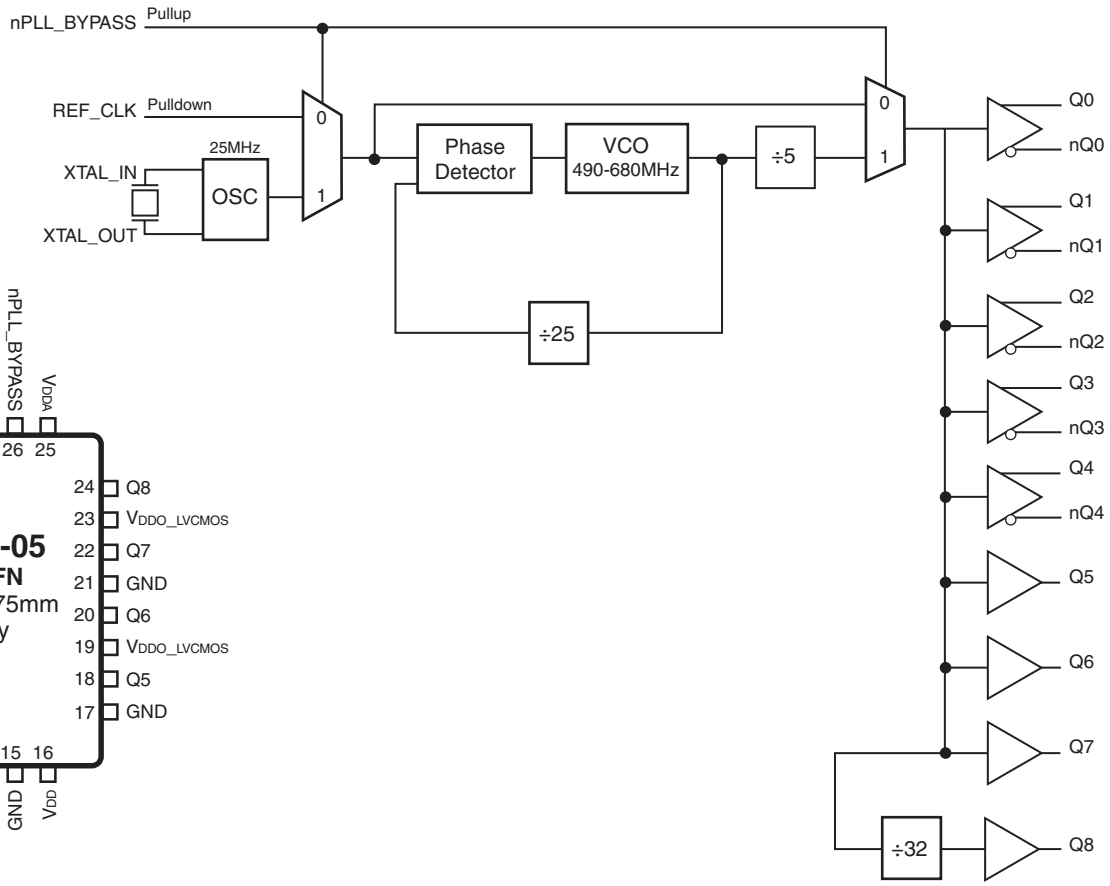

Pin Assignment

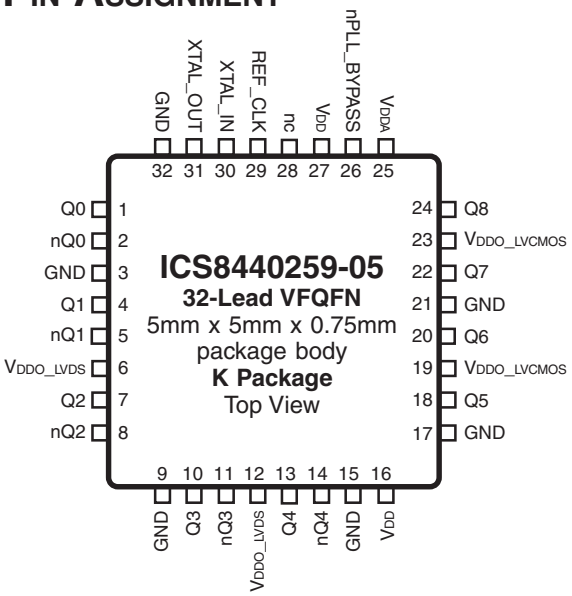

The Preliminary Information presented herein represents a product in pre-production. The noted characteristics are based on initial product characterization and/or qualification. Integrated Device Technology, Incorporated (IDT) reserves the right to change any circuitry or specifications without notice.

TABLE 1. PIN DESCRIPTIONS

Number	Name	Type		Description
1, 2	Q0, nQ0	Output		Differential clock outputs. LVDS interface levels.
3, 9, 15, 17, 21, 32	GND	Power		Power supply ground.
4, 5	Q1, nQ1	Output		Differential clock outputs. LVDS interface levels.
6, 12	V_{DDO_LVDS}	Power		Output supply pins for Q[0:4]/nQ[0:4] LVDS outputs.
7, 8	Q2, nQ2	Output		Differential clock outputs. LVDS interface levels.
10, 11	Q3, nQ3	Output		Differential clock outputs. LVDS interface levels.
13, 14	Q4, nQ4	Output		Differential clock outputs. LVDS interface levels.
16, 27	V_{DD}	Power		Core supply pins.
18, 20, 22, 24	Q5, Q6, Q7, Q8	Output		Single-ended clock outputs. LVCMOS/LVTTL interface levels.
19, 23	V_{DDO_LVCMOS}	Power		Output supply pins for Q5:Q8 LVCMOS outputs.
25	V_{DDA}	Power		Analog supply pin.
26	nPLL_BYPASS	Input	Pullup	Input select and PLL bypass control pin. See Table 3. LVCMOS/LVTTL interface levels.
28	nc	Unused		No connect.
29	REF_CLK	Input	Pulldown	Single-ended reference clock input. Only selected in nPLL_BYPASS mode. LVCMOS/LVTTL interface levels.
30, 31	XTAL_IN, XTAL_OUT	Input		Crystal oscillator interface. XTAL_OUT is the output. XTAL_IN is the input.

NOTE: *Pullup and Pulldown* refer to internal input resistors. See Table 2, Pin Characteristics, for typical values.

TABLE 2. PIN CHARACTERISTICS

Symbol	Parameter		Test Conditions	Minimum	Typical	Maximum	Units
C_{IN}	Input Capacitance				4		pF
C_{PD}	Power Dissipation Capacitance		V_{DD}, V_{DDO_LVCMOS} = 3.465V		TBD		pF
$R_{PULLDOWN}$	Input Pulldown Resistor				51		kΩ
R_{OUT}	Output Impedance	Q5:Q8			TBD		Ω

TABLE 3. PLL BYPASS AND INPUT SELECT FUNCTION TABLE

Inputs		
nPLL_BYPASS	**PLL Bypass**	**Input Selected**
0	PLL Bypassed	REF_CLK
1	PLL Enabled	XTAL_IN/XTAL_OUT (default)

ABSOLUTE MAXIMUM RATINGS

Supply Voltage, V_{DD}	4.6V
Inputs, V_I	-0.5V to V_{DD} + 0.5V
Outputs, I_O (LVCMOS)	-0.5V to V_{DDO_LVCMOS} + 0.5V
Outputs, I_O (LVDS)	
Continuous Current	10mA
Surge Current	15mA
Operating Temperature Range, T_A	-40°C to +85°C
Storage Temperature, T_{STG}	-65°C to 150°C
Package Thermal Impedance, θ_{JA}	37°C/W (0 mps)

NOTE: Stresses beyond those listed under Absolute Maximum Ratings may cause permanent damage to the device. These ratings are stress specifications only. Functional operation of product at these conditions or any conditions beyond those listed in the *DC Characteristics* or *AC Characteristics* is not implied. Exposure to absolute maximum rating conditions for extended periods may affect product reliability.

TABLE 4A. POWER SUPPLY DC CHARACTERISTICS, $V_{DD} = V_{DDO_LVCMOS} = V_{DDO_LVDS} = 3.3V \pm 5\%$, T_A = 0°C TO 70°C

Symbol	Parameter	Test Conditions	Minimum	Typical	Maximum	Units
V_{DD}	Core Supply Voltage		3.135	3.3	3.465	V
V_{DDA}	Analog Supply Voltage		V_{DD} – 0.10	3.3	V_{DD}	V
V_{DDO_LVCMOS}, V_{DDO_LVDS}	Output Supply Voltage		3.135	2.5	3.465	V
I_{DD}	Power Supply Current				108	mA
I_{DDA}	Analog Supply Current				10	mA
I_{DDO_LVCMOS}, I_{DDO_LVDS}	Power Supply Current				160	mA

TABLE 4B. LVCMOS/LVTTL DC CHARACTERISTICS, $V_{DD} = V_{DDO_LVCMOS} = 3.3V \pm 5\%$, T_A = 0°C TO 70°C

Symbol	Parameter		Test Conditions	Minimum	Typical	Maximum	Units
V_{IH}	Input High Voltage			2		V_{DD} + 0.3	V
V_{IL}	Input Low Voltage			-0.3		0.8	V
I_{IH}	Input High Current	REF_CLK	$V_{DD} = V_{IN} = 3.465V$			150	µA
		nPLL_BYPASS	$V_{DD} = V_{IN} = 3.465V$			5	µA
I_{IL}	Input Low Current	REF_CLK	$V_{DD} = 3.465V$, $V_{IN} = 0V$	-5			µA
		nPLL_BYPASS	$V_{DD} = 3.465V$, $V_{IN} = 0V$	-150			µA
V_{OH}	Output High Voltage; NOTE 1	Q5:Q8	$V_{DDO_LVCMOS} = 3.3V \pm 5\%$	2.1			V
V_{OL}	Output Low Voltage; NOTE 1	Q5:Q8	$V_{DDO_LVCMOS} = 3.3V \pm 5\%$			0.5	V

NOTE 1: Outputs terminated with 50Ω to V_{DDO_LVCMOS}/2. See Parameter Measurement Information, Output Load Test Circuit diagram.

TABLE 4C. LVDS DC CHARACTERISTICS, $V_{DD} = V_{DDO_LVDS} = 3.3V \pm 5\%$, $T_A = 0°C$ TO $70°C$

Symbol	Parameter	Test Conditions	Minimum	Typical	Maximum	Units
V_{OD}	Differential Output Voltage		250	385	450	mV
ΔV_{OD}	V_{OD} Magnitude Change			25		mV
V_{OS}	Offset Voltage			1.35		V
ΔV_{OS}	V_{OS} Magnitude Change			25		mV

TABLE 5. CRYSTAL CHARACTERISTICS

Parameter	Test Conditions	Minimum	Typical	Maximum	Units
Mode of Oscillation		Fundamental			
Frequency			25		MHz
Equivalent Series Resistance (ESR)				50	Ω
Shunt Capacitance				7	pF
Drive Level				1	mW

NOTE: Characterized using an 18pF parallel resonant crystal.

TABLE 6. AC CHARACTERISTICS, $V_{DD} = V_{DDO_LVCMOS} = V_{DDO_LVDS} = 3.3V \pm 5\%$, $T_A = 0°C$ TO $70°C$

Symbol	Parameter		Test Conditions	Minimum	Typical	Maximum	Units
f_{OUT}	Output Frequency	Q0/nQ0:Q4/nQ4			125		MHz
		Q5:Q7			125		MHz
		Q8			3.90625		MHz
*t*jit(Ø)	RMS Phase Jitter (Random); NOTE 1	Q0:Q4/nQ0:Q4	125MHz, (1.875MHz - 20MHz)		0.43		ps
		Q5:Q7	125MHz, (1.875MHz - 20MHz)		0.44		ps
t_R / t_F	Output Rise/Fall Time	Q0/nQ0:Q4/nQ4	125MHz, 20% to 80%	250	375	550	ps
		Q0/nQ0:Q4/nQ4; NOTE 2	125MHz, 20% to 80%	0.1		1.2	ns
		Q5:Q7	125MHz, 20% to 80%	0.3	0.7	1.2	ns
		Q8; NOTE 2	3.90625MHz, 20% to 80%	0.9	1.2		ns
odc	Output Duty Cycle	Q0/nQ0:Q4/nQ4	125MHz	45		55	%
		Q5:Q7	125MHz	45		55	%
		Q8	3.90625MHz	45		55	%
odc	Output Duty Cycle, BYPASS Mode	Q0/nQ0:Q4/nQ4	125MHz	47		53	%
		Q5:Q7	125MHz	45		55	%
		Q8	3.90625MHz	48		52	%

NOTE 1: Please refer to the Phase Noise Plots.
NOTE 2: Output loaded with 15pF.

TYPICAL PHASE NOISE AT 125MHZ (LVCMOS @ 3.3V)

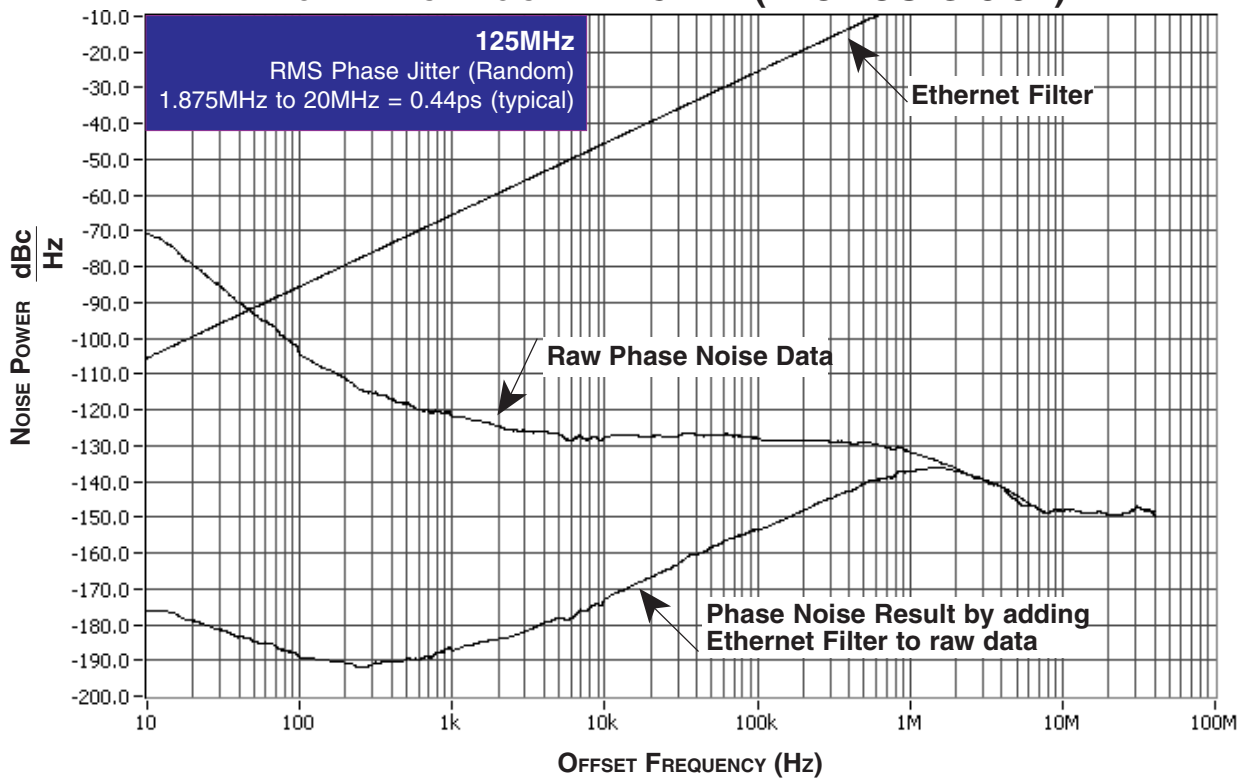

TYPICAL PHASE NOISE AT 125MHZ (LVDS @ 3.3V)

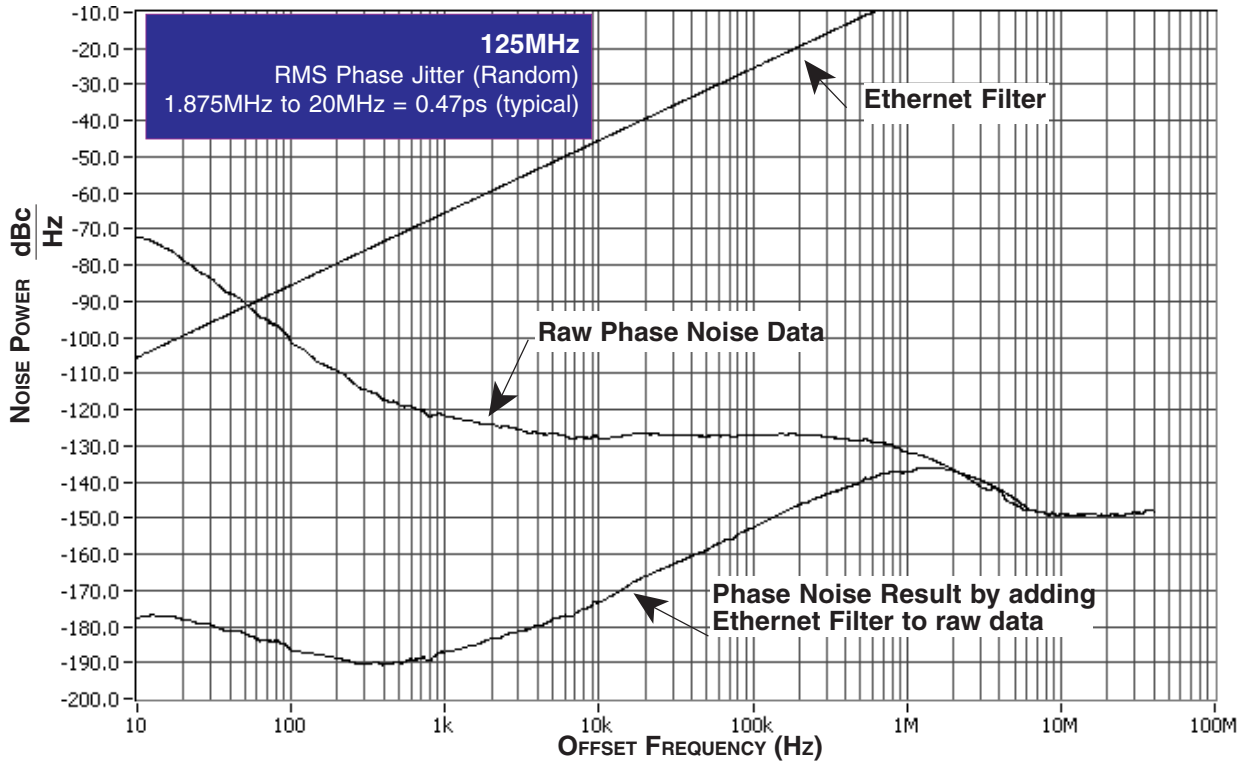

PARAMETER MEASUREMENT INFORMATION

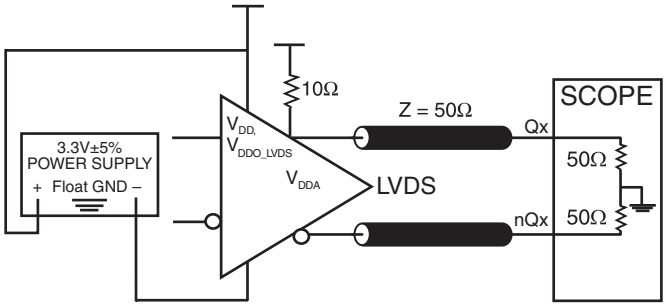

3.3V LVDS OUTPUT LOAD AC TEST CIRCUIT

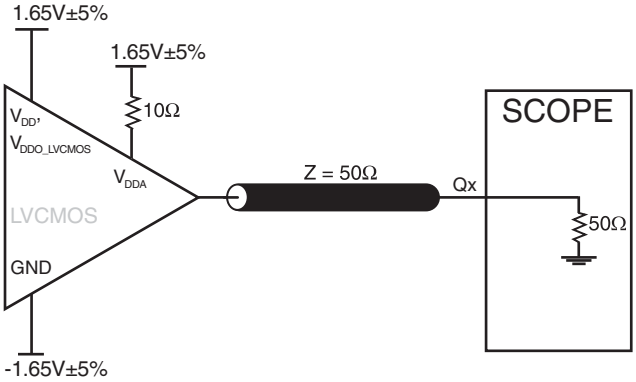

3.3V LVCMOS OUTPUT LOAD AC TEST CIRCUIT

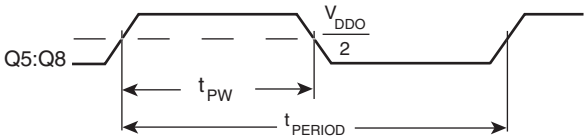

$$odc = \frac{t_{PW}}{t_{PERIOD}} \times 100\%$$

LVCMOS OUTPUT DUTY CYCLE/PULSE WIDTH/PERIOD

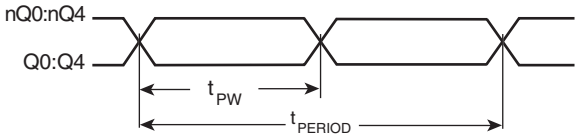

$$odc = \frac{t_{PW}}{t_{PERIOD}} \times 100\%$$

LVDS OUTPUT DUTY CYCLE/PULSE WIDTH/PERIOD

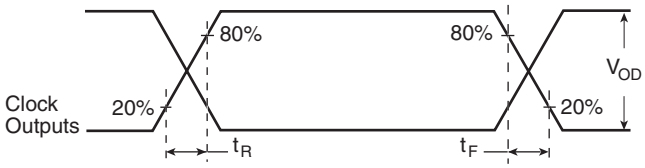

LVDS OUTPUT RISE/FALL TIME

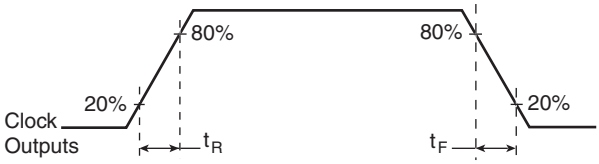

LVCMOS OUTPUT RISE/FALL TIME

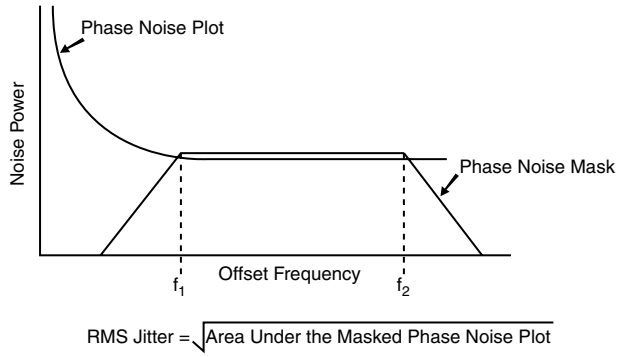

RMS PHASE JITTER

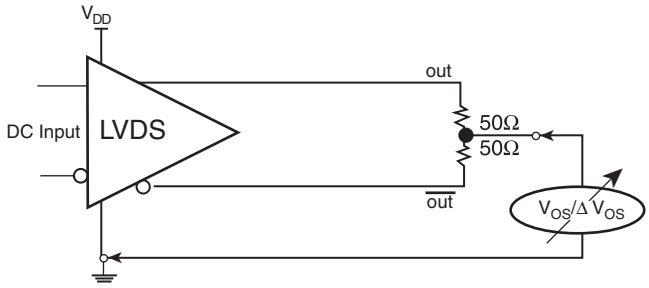

OFFSET VOLTAGE SETUP

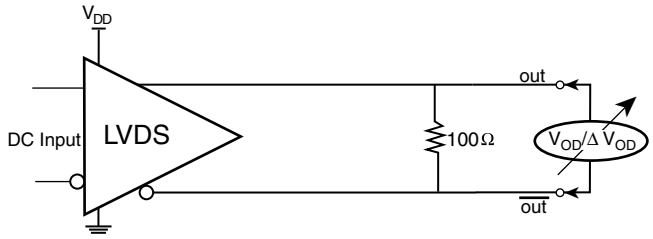

DIFFERENTIAL OUTPUT VOLTAGE SETUP

APPLICATION INFORMATION

POWER SUPPLY FILTERING TECHNIQUES

As in any high speed analog circuitry, the power supply pins are vulnerable to random noise. The ICS8440259-05 provides separate power supplies to isolate any high switching noise from the outputs to the internal PLL. V_{DD}, V_{DDA}, V_{DDO_LVDS} and V_{DDO_LVCMOS} should be individually connected to the power supply plane through vias, and bypass capacitors should be used for each pin. To achieve optimum jitter performance, power supply isolation is required. *Figure 1* illustrates how a 10Ω resistor along with a 10µF and a .01µF bypass capacitor should be connected to each V_{DDA}.

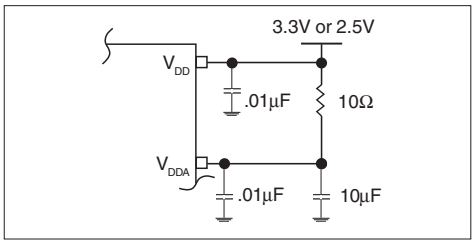

FIGURE 1. POWER SUPPLY FILTERING

CRYSTAL INPUT INTERFACE

The ICS8440259-05 has been characterized with 18pF parallel resonant crystals. The capacitor values shown in *Figure 2* below were determined using a 25MHz, 18pF parallel resonant crystal and were chosen to minimize the ppm error.

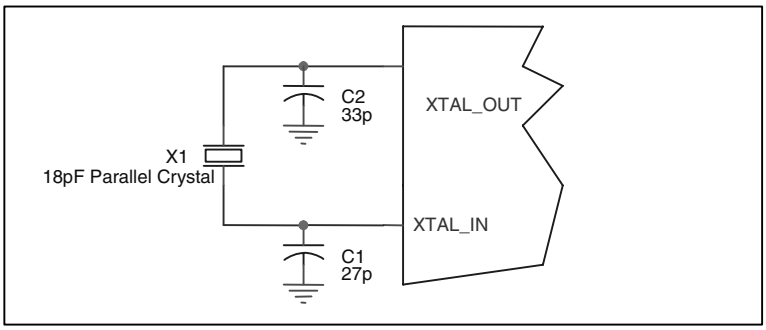

FIGURE 2. CRYSTAL INPUT INTERFACE

LVCMOS TO XTAL INTERFACE

The XTAL_IN input can accept a single-ended LVCMOS signal through an AC couple capacitor. A general interface diagram is shown in *Figure 3.* The XTAL_OUT pin can be left floating. The input edge rate can be as slow as 10ns. For LVCMOS inputs, it is recommended that the amplitude be reduced from full swing to half swing in order to prevent signal interference with the power rail and to reduce noise. This configuration requires that the output impedance of the driver (Ro) plus the series resistance (Rs) equals the transmission line impedance. In addition, matched termination at the crystal input will attenuate the signal in half. This can be done in one of two ways. First, R1 and R2 in parallel should equal the transmission line impedance. For most 50Ω applications, R1 and R2 can be 100Ω. This can also be accomplished by removing R1 and making R2 50Ω.

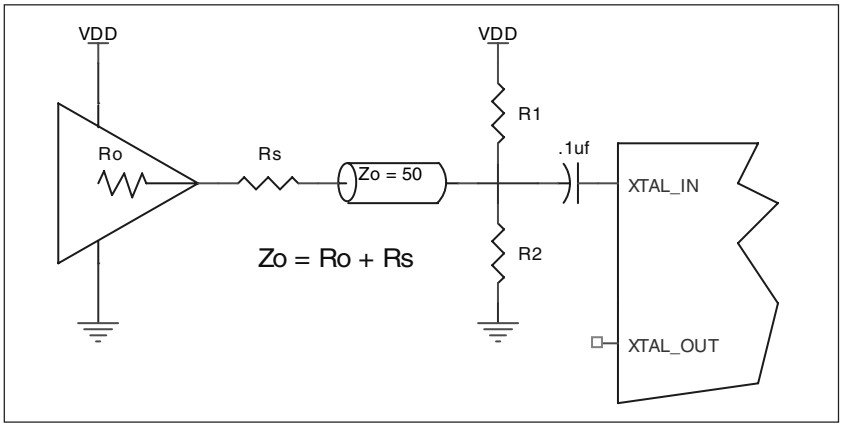

FIGURE 3. GENERAL DIAGRAM FOR LVCMOS DRIVER TO XTAL INPUT INTERFACE

RECOMMENDATIONS FOR UNUSED INPUT AND OUTPUT PINS

INPUTS:

CRYSTAL INPUT:
For applications not requiring the use of the crystal oscillator input, both XTAL_IN and XTAL_OUT can be left floating. Though not required, but for additional protection, a 1kΩ resistor can be tied from XTAL_IN to ground.

REF_CLK INPUT:
For applications not requiring the use of the reference clock, it can be left floating. Though not required, but for additional protection, a 1kΩ resistor can be tied from the REF_CLK to ground.

LVCMOS CONTROL PINS:
All control pins have internal pull-downs; additional resistance is not required but can be added for additional protection. A 1kΩ resistor can be used.

OUTPUTS:

LVCMOS OUTPUT:
All unused LVCMOS output can be left floating. There should be no trace attached.

LVDS OUTPUT
All unused LVDS output pairs can be either left floating or terminated with 100Ω across. If they are left floating, there should be no trace attached.

3.3V LVDS Driver Termination

A general LVDS interface is shown in *Figure 4.* In a 100Ω differential transmission line environment, LVDS drivers require a matched load termination of 100Ω across near the receiver input. For a multiple LVDS outputs buffer, if only partial outputs are used, it is recommended to terminate the unused outputs.

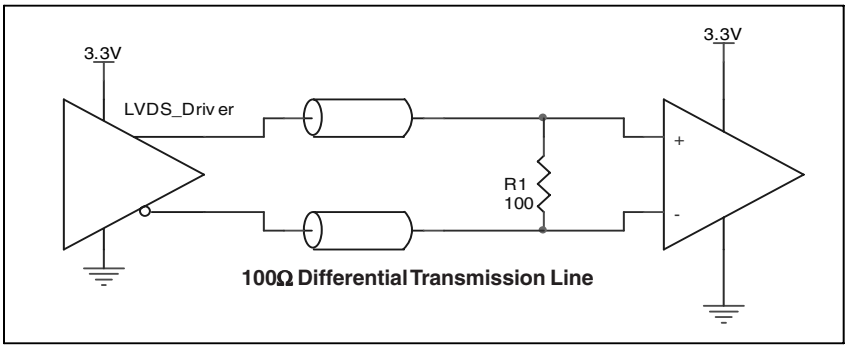

Figure 4. Typical LVDS Driver Termination

Thermal Release Path

The expose metal pad provides heat transfer from the device to the P.C. board. The expose metal pad is ground pad connected to ground plane through thermal via. The exposed pad on the device to the exposed metal pad on the PCB is contacted through solder as shown in *Figure 5.* For further information, please refer to the Application Note on Surface Mount Assembly of Amkor's Thermally /Electrically Enhance Leadframe Base Package, Amkor Technology.

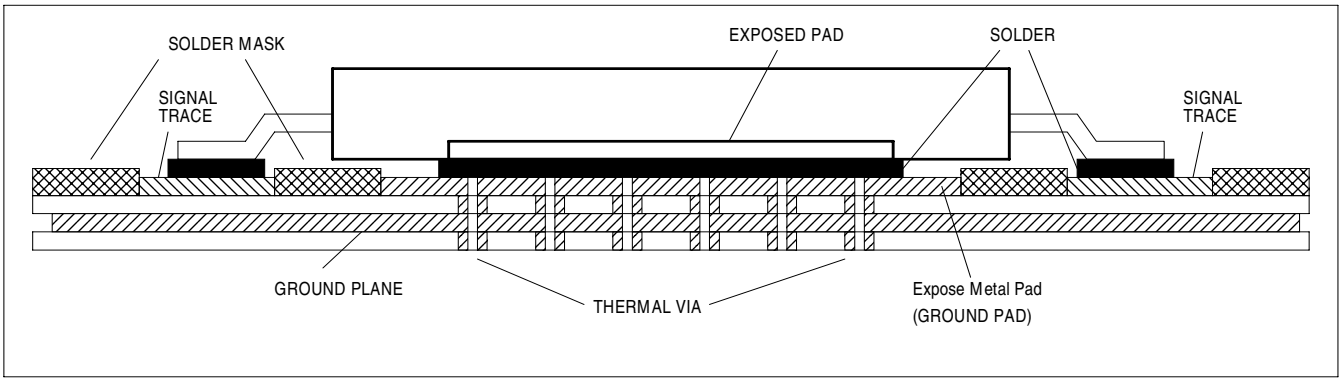

Figure 5. P.C. Board for Exposed Pad Thermal Release Path Example

POWER CONSIDERATIONS

This section provides information on power dissipation and junction temperature for the ICS8440259-05.
Equations and example calculations are also provided.

1. Power Dissipation.

The total power dissipation for the ICS8440259-05 is the sum of the core power plus the power dissipated in the load(s).
The following is the power dissipation for V_{DD} = 3.3V + 5% = 3.465V, which gives worst case results.

Core and LVDS Output Power Dissipation

- Power (core, LVDS) = V_{DD_MAX} * (I_{DD} + I_{DDO_LVCMOS} + I_{DDO_LVDS}) = 3.465V * (108mA + 160mA) = **928.6mW**

LVCMOS Output Power Dissipation

- Output Impedance R_{OUT} Power Dissipation due to Loading 50Ω to V_{DDO}/2

  Output Current I_{OUT} = V_{DDO_MAX} / [2 * (50Ω + R_{OUT})] = 3.465V / [2 * (50Ω + 12Ω(TBD))] = **27.9mA**

- Power Dissipation on the R_{OUT} per LVCMOS output
  Power (R_{OUT}) = R_{OUT} * $(I_{OUT})^2$ = 12Ω * $(27.9mA)^2$ = **9.3mW per output**

- Total Power Dissipation on the R_{OUT}
  Total Power (R_{OUT}) = 9.3mW * 4 = **37.3mW**

- Dynamic Power Dissipation at 125MHz
  Power (125MHz) = C_{PD} * Frequency * $(V_{DDO})^2$ = 8pF * 125MHz * $(3.465V)^2$ = **12mW per output**
  Total Power (125MHz) = 12mW * 3 = 36mW

- Dynamic Power Dissipation at 125MHz
  Power (3.9MHz) = C_{PD} * frequency * $(V_{DDO})^2$ = 8pF * 3.9MHz * $(3.465V)^2$ = **0.37mW per output**

Total Power Dissipation

- **Total Power**
  = Power (core, LVDS) + Total Power (R_{OUT}) + Total Power (125MHz) + Total Power (3.9MHz)
  = 928.6mW + 37.3mW + 36mW + 0.37mW
  = 1.002mW

2. Junction Temperature.

Junction temperature, Tj, is the temperature at the junction of the bond wire and bond pad and directly affects the reliability of the device. The maximum recommended junction temperature for HiPerClockS™ devices is 125°C.

The equation for Tj is as follows: $Tj = \theta_{JA} * Pd_total + T_A$

Tj = Junction Temperature

θ_{JA} = Junction-to-Ambient Thermal Resistance

Pd_total = Total Device Power Dissipation (example calculation is in section 1 above)

T_A = Ambient Temperature

In order to calculate junction temperature, the appropriate junction-to-ambient thermal resistance θ_{JA} must be used. Assuming no air flow and a multi-layer board, the appropriate value is 37°C/W per Table 7.

Therefore, Tj for an ambient temperature of 70°C with all outputs switching is:

70°C + 1.002W * 37°C/W = 107°C. This is well below the limit of 125°C.

This calculation is only an example. Tj will obviously vary depending on the number of loaded outputs, supply voltage, air flow, and the type of board (single layer or multi-layer).

TABLE 7. THERMAL RESISTANCE θ_{JA} FOR 32-LEAD VFQFN, FORCED CONVECTION

θ_{JA} vs. Air Flow (Meters per Second)			
	0	**1**	**2.5**
Multi-Layer PCB, JEDEC Standard Test Boards	37.0°C/W	32.4°C/W	29.0°C/W

RELIABILITY INFORMATION

TABLE 8. θ_{JA} VS. AIR FLOW TABLE FOR 32 LEAD VFQFN

θ_{JA} vs. Air Flow (Meters per Second)			
	0	**1**	**2.5**
Multi-Layer PCB, JEDEC Standard Test Boards	37.0°C/W	32.4°C/W	29.0°C/W

TRANSISTOR COUNT

The transistor count for ICS8440259-05 is: 2975

PACKAGE OUTLINE - K SUFFIX FOR 32 LEAD VFQFN

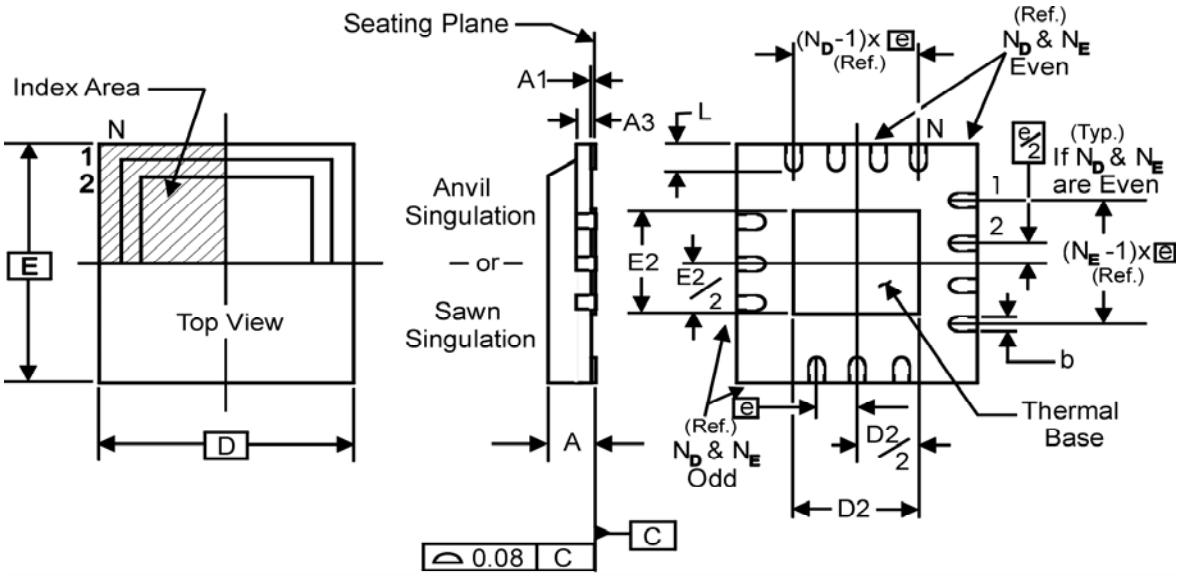

TABLE 9. PACKAGE DIMENSIONS

JEDEC VARIATION ALL DIMENSIONS IN MILLIMETERS			
SYMBOL	VHHD-2		
	MINIMUM	NOMINAL	MAXIMUM
N	32		
A	0.80	--	1.00
A1	0	--	0.05
A3	0.25 Ref.		
b	0.18	0.25	0.30
N_D			8
N_E			8
D	5.00 BASIC		
D2	1.25	2.25	3.25
E	5.00 BASIC		
E2	1.25	2.25	3.25
e	0.50 BASIC		
L	0.30	0.40	0.50

Reference Document: JEDEC Publication 95, MO-220

TABLE 10. ORDERING INFORMATION

Part/Order Number	Marking	Package	Shipping Packaging	Temperature
ICS8440259AK-05	ICS40259A05	32 Lead VFQFN	Tray	0°C to 70°C
ICS8440259AK-05T	ICS40259A05	32 Lead VFQFN	1000 Tape & Reel	0°C to 70°C
ICS8440259AK-05LF	ICS0259A05L	32 Lead "Lead-Free" VFQFN	Tray	0°C to 70°C
ICS8440259AK-05LFT	ICS0259A05L	32 Lead "Lead-Free" VFQFN	1000 Tape & Reel	0°C to 70°C

NOTE: Parts that are ordered with an "LF" suffix to the part number are the Pb-Free configuration and are RoHS compliant.

While the information presented herein has been checked for both accuracy and reliability, Integrated Device Technology, Incorporated (IDT) assumes no responsibility for either its use or for infringement of any patents or other rights of third parties, which would result from its use. No other circuits, patents, or licenses are implied. This product is intended for use in normal commercial applications. Any other applications such as those requiring extended temperature ranges, high reliability or other extraordinary environmental requirements are not recommended without additional processing by IDT. IDT reserves the right to change any circuitry or specifications without notice. IDT does not authorize or warrant any IDT product for use in life support devices or critical medical instruments.

Innovate with IDT and accelerate your future networks. Contact:

www.IDT.com

For Sales
800-345-7015
408-284-8200
Fax: 408-284-2775

For Tech Support
netcom@idt.com
480-763-2056

Corporate Headquarters
Integrated Device Technology, Inc.
6024 Silver Creek Valley Road
San Jose, CA 95138
United States
800 345 7015
+408 284 8200 (outside U.S.)

Asia Pacific and Japan
Integrated Device Technology
Singapore (1997) Pte. Ltd.
Reg. No. 199707558G
435 Orchard Road
#20-03 Wisma Atria
Singapore 238877
+65 6 887 5505

Europe
IDT Europe, Limited
321 Kingston Road
Leatherhead, Surrey
KT22 7TU
England
+44 (0) 1372 363 339
Fax: +44 (0) 1372 378851

www.IDT.com

© 2006 Integrated Device Technology, Inc. All rights reserved. Product specifications subject to change without notice. IDT, the IDT logo, ICS and HiPerClockS are trademarks of Integrated Device Technology, Inc. Accelerated Thinking is a service mark of Integrated Device Technology, Inc. All other brands, product names and marks are or may be trademarks or registered trademarks used to identify products or services of their respective owners.
Printed in USA