THIS DRAWING IS UNPUBLISHED. RELEASED FOR PUBLICATION 20
© COPYRIGHT 20 BY TYCO ELECTRONICS CORPORATION. ALL RIGHTS RESERVED.

LOC	DIST
DS	–

REVISIONS

P	LTR	DESCRIPTION	DATE	DWN	APVD
	B	REVISED (ECR-07-005158)	14.MAR'07	SC	JK
	C	REVISED (ECR-09-011788)	25.MAY'09	SC	JK
	C1	REVISED (ECR-13-016595)	25.OCT'13	KD	BW

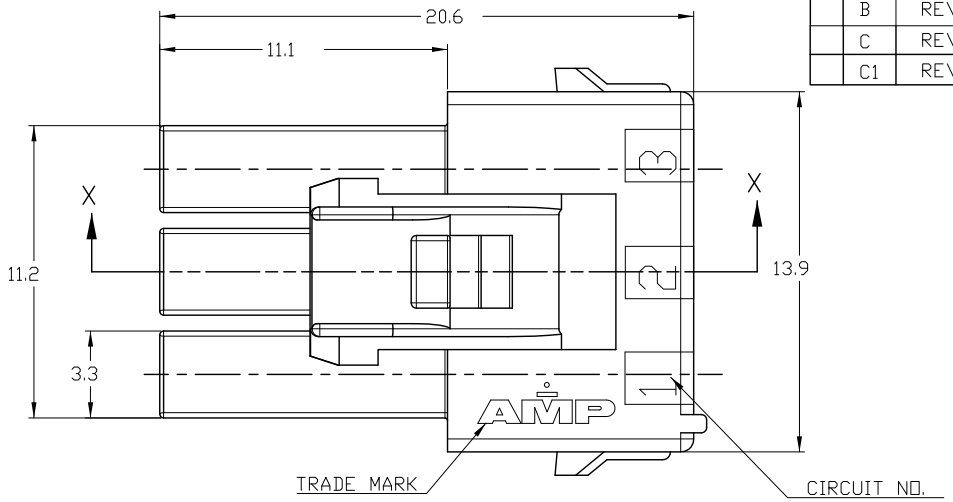

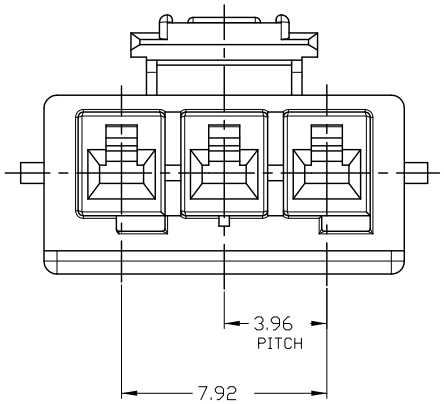

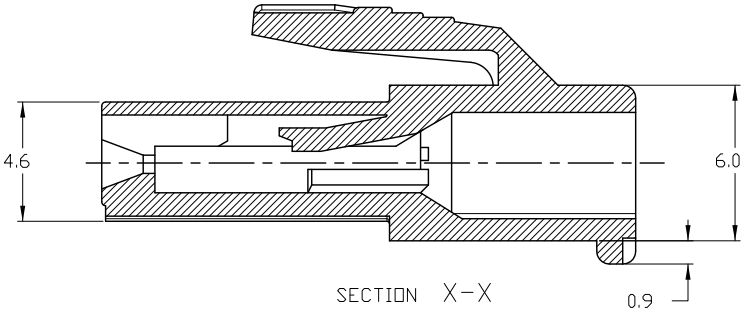

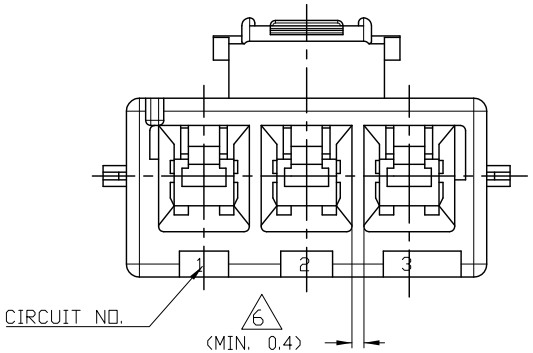

NOTE;
1.APPLICABLE CONTACT P/N
-REC CONTACT:177915- □(AWG#16-#20)
:177914- □(AWG#22-#26)
2.MATING CONN.P/N
-CAP HSG:368572- □(FREE HANGING)
2005250- □(PANEL MOUNT)
-TAB CONTACT:177917- □(AWG#16-#20)
177916- □(AWG#22-#26)
-PC BOARD MOUNT(ASS'Y):179839- □
3.APPLICABLE DOUBLE LOCK PLATE:177919-1
*IT SHOULD BE USED CERTAINLY WHEN CABLE ASS'Y
4.GENERAL TOLERANCES:±0.3
5.ACCORDING TO IEC 60335-1 4.2 EDITION
-PART MEETS GWT 750°C,850°C.
-MATERIAL MEETS BALL PRESSURE TESTING AT 125°C.
-MATERIAL HAS CTI VALUE OF 250V.
6.MIN.THICKNESS OF INSULATING WALL

	P/N	COLOR
©	368571-9	BLACK
©	368571-6	BLUE
©	368571-4	YELLOW
©	368571-2	RED
©	368571-1	NATURAL

THIS DRAWING IS A CONTROLLED DOCUMENT FOR TYCO ELECTRONICS CORPORATION IT IS SUBJECT TO CHANGE AND THE CONTROLLING ENGINEERING ORGANIZATION SHOULD BE CONTACTED FOR THE LATEST REVISION.

DIMENSIONS: mm

TOLERANCES UNLESS OTHERWISE SPECIFIED

0 PLC	±–
1 PLC	±0.5
2 PLC	±0.13
3 PLC	±0.013
4 PLC	±0.0001
ANGLES	±–

MATERIAL © PA66(UL94V-0)

FINISH –

DWN KD CHEON
CHK BH CHO
APVD BW KANG
PRODUCT SPEC 108-61106
APPLICATION SPEC –
WEIGHT –

TE Connectivity

NAME PDL 3P PLUG HSG 3.96mm (GWT)

SIZE	CAGE CODE	DRAWING NO	RESTRICTED TO
A3	00779	C- 368571	–

CUSTOMER DRAWING | SCALE 5:1 | SHEET 1 OF 1 | REV C1

AMP 1470-19 REV 31MAR2000