THIS DRAWING IS UNPUBLISHED. RELEASED FOR PUBLICATION －,－ .
© COPYRIGHT － By － ALL RIGHTS RESERVED.

LOC	DIST
J	—

REVISIONS

P	LTR	DESCRIPTION	DATE	DWN	APVD
	E	REVISED PER ECR-11-008941	28JUL11	T.T	T.M

リール引出し方向
DIRECTION OFF TOP OF REEL

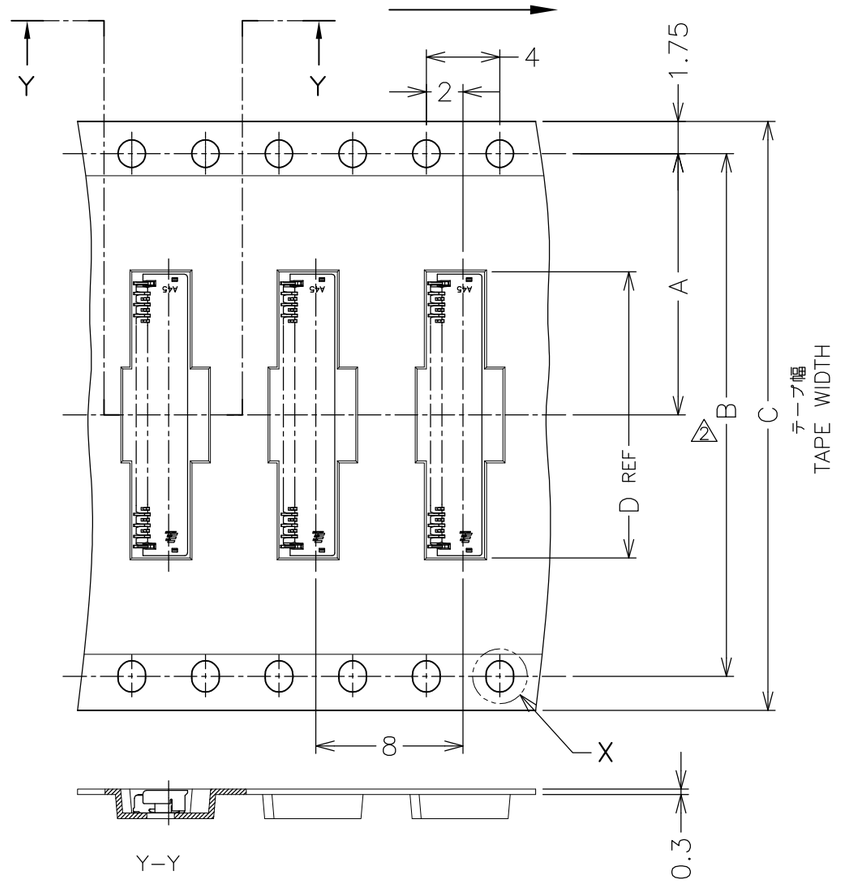

VIEW W
テープ幅32mm以上に適用
APPLIED TAPE WIDTH 32MM,MORE.

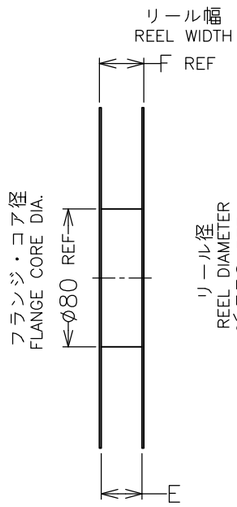

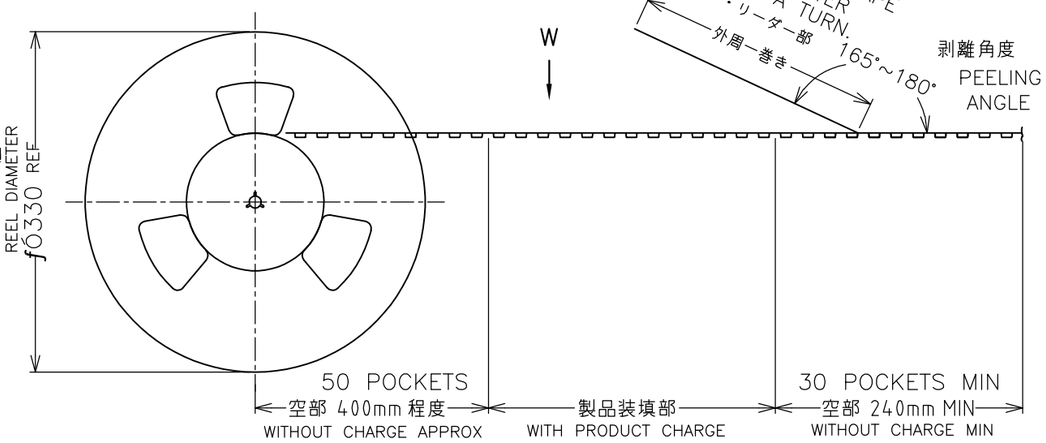

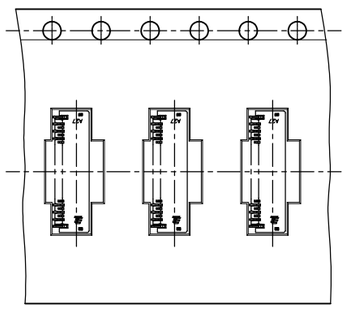

VIEW W
テープ幅12mm, 16mm, 24mm に適用
APPLIED TAPE WIDTH 12MM, 16MM AND 24MM.

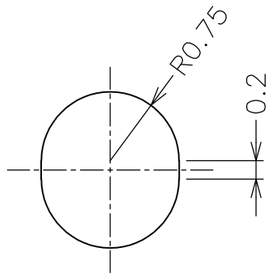

DETAIL X

△1 GENERAL TOLERANCE
10≧: ±0.2
30≧ >10: ±0.25
100≧ >30: ±0.3
ANGLES: ±3°

△2 DIM. B AND DETAIL"X" APPLIED TAPE WIDE, 32mm MORE.

△1 一般公差
10以下：±0.2
10を越え 30以下：±0.25
30を越え 100以下：±0.3
角　度：±3°

△2 B寸法及び"X"詳細図は、テープ幅32mm以上に適用

	STATUS	CONNECTOR WEIGHT	F	E	D	C	B	A	数量（ケ） QTY/REEL	POS.(N)	EMBOSS TAPE PACKAGING PART NUMBER
			DIMENSIONS								
OBSOLETE	AVAILABLE	0.102g	30.4	24.4	17.35	24	—	11.5	4000	51	2-2013496-1
	AVAILABLE	0.090g	30.4	24.4	15.55	24	—	11.5	4000	45	1-2013496-8
	AVAILABLE	0.083g	30.4	24.4	14.35	24	—	11.5	4000	41	1-2013496-6
	AVAILABLE	0.080g	30.4	24.4	13.75	24	—	11.5	4000	39	1-2013496-5
	AVAILABLE	0.066g	30.4	24.4	11.35	24	—	11.5	4000	31	1-2013496-1
	AVAILABLE	0.062g	30.4	24.4	10.75	24	—	11.5	4000	29	1-2013496-0
	AVAILABLE	0.059g	30.4	24.4	10.15	24	—	11.5	4000	27	2013496-9
OBSOLETE	AVAILABLE	0.048g	22.4	16.4	8.35	16	—	7.5	4000	21	2013496-6

THIS DRAWING IS A CONTROLLED DOCUMENT.

DIMENSIONS: mm

TOLERANCES UNLESS OTHERWISE SPECIFIED:
0 PLC ± 0.3
1 PLC ± 0.3
2 PLC ± 0.3
3 PLC ± 0.3
4 PLC ± 0.3
ANGLES ± 3°

MATERIAL: SEE NOTE 3
FINISH: SEE NOTE 4

DWN	Y.KODAIRA	29NOV2007
CHK	T.KUSUHARA	29NOV2007
APVD	T.KUSUHARA	29NOV2007
PRODUCT SPEC	108-78351	
APPLICATION SPEC	411-78302	
WEIGHT	SEE TABLE	

TE Connectivity

NAME: 0.3FPC Narrow BF-L-1.2H
1.2mmH, 2.9mmW, GOLD PLATE

SIZE	CAGE CODE	DRAWING NO	RESTRICTED TO
A3	00779	C-2013496	—

CUSTOMER DRAWING | SCALE 10:1 | SHEET 1 OF 2 | REV E

THIS DRAWING IS UNPUBLISHED. RELEASED FOR PUBLICATION –,– .
© COPYRIGHT – By – ALL RIGHTS RESERVED.

LOC	DIST
J	—

REVISIONS

P	LTR	DESCRIPTION	DATE	DWN	APVD
	–	SEE SHEET 1	–	—	—

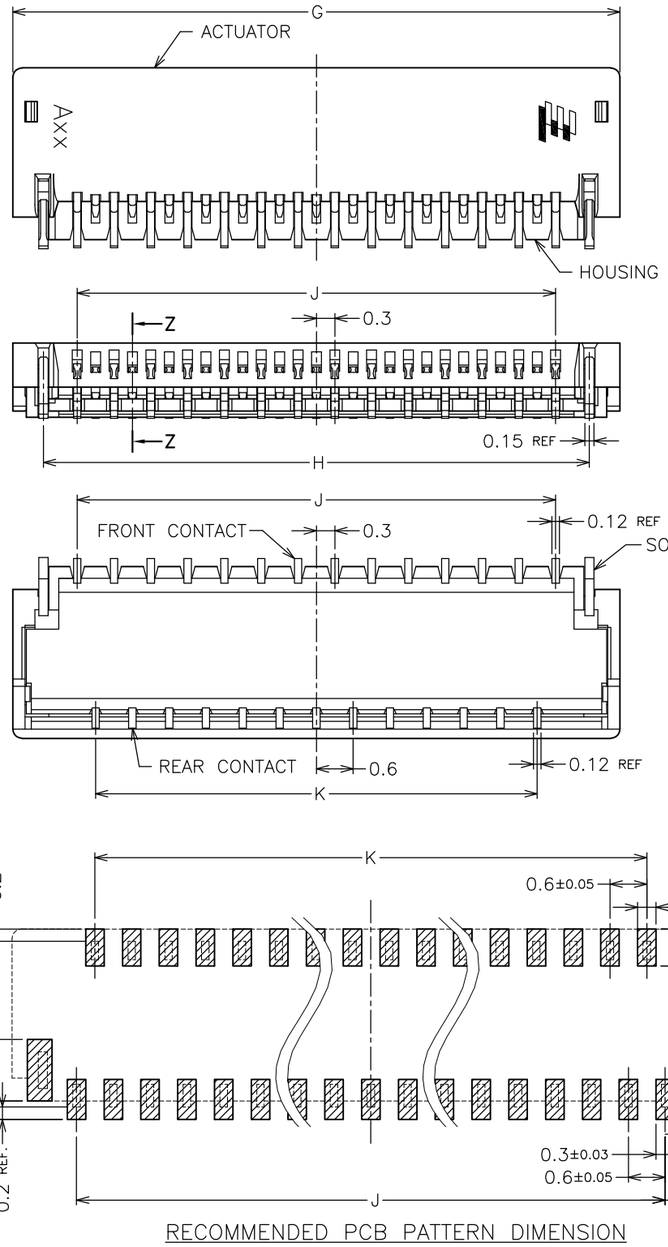

RECOMMENDED PCB PATTERN DIMENSION

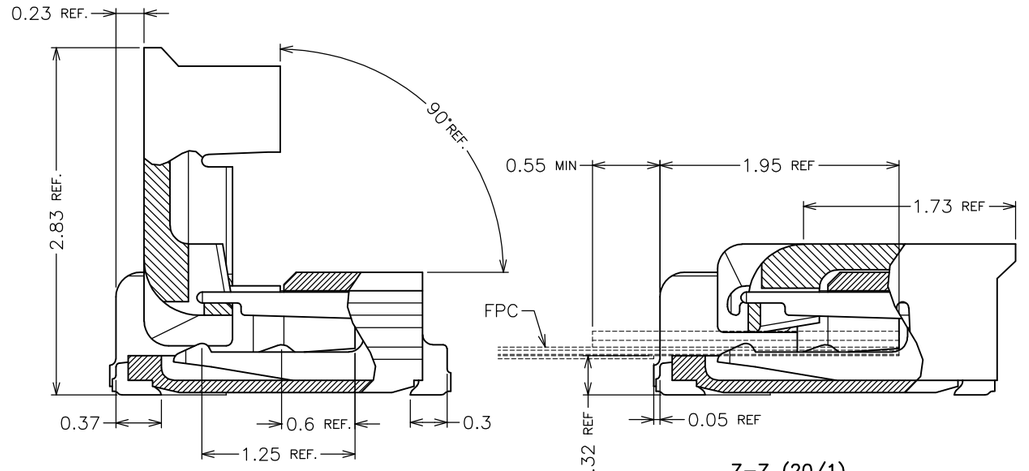

Z–Z (20/1)
(ACTUATOR OPEN CONDITION)

Z–Z (20/1)

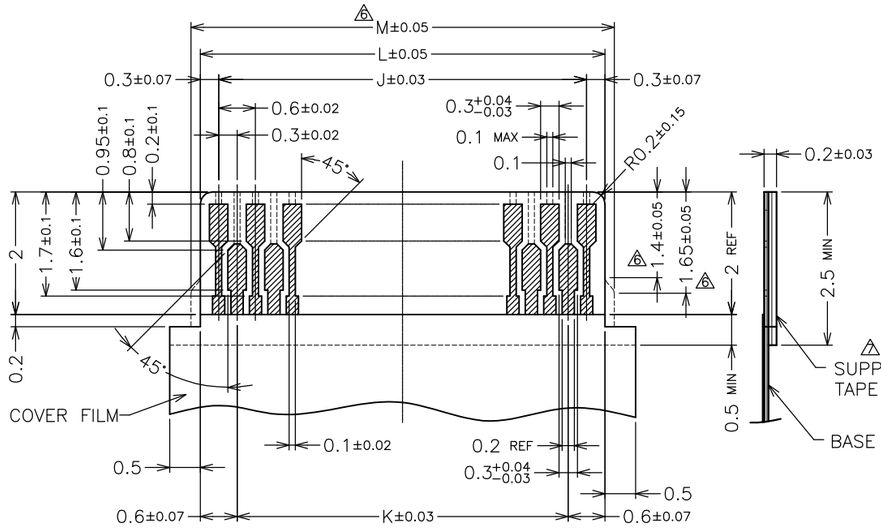

RECOMMENDED FPC PATTERN DIMENSION
CONDUCTOR : GOLD OVER NICKEL PLATING (Au 0.1μm MIN.)

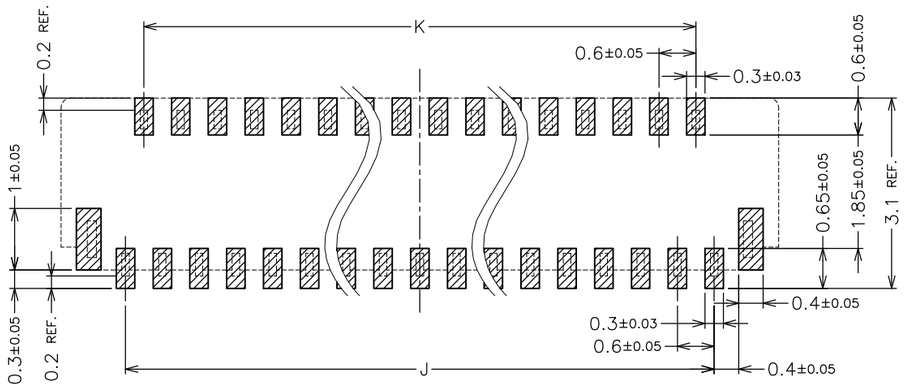

3. MATERIAL
HOUSING : GRASS FULLED LCP, UL94V–0 (COLOR : NATURAL)
ACTUATOR : GRASS FULLED PPS, UL94V–0 (COLOR : BLACK)
FRONT CONTACT : COPPER ALLOY
REAR CONTACT : COPPER ALLOY
SOLDER PEG : COPPER ALLOY

4. FINISH
FRONT CONTACT : GOLD OVER NICKEL PLATING
REAR CONTACT : GOLD OVER NICKEL PLATING
SOLDER PEG : TIN OVER NICKEL PLATING

5. THIS PRODUCT IS THE NICKEL DAM TYPE.

⑥ DIM.M IS APPLIED BELOW 25PINS.

⚠ THE SUPPORTING TAPE OF FPC IS RECOMMENDED TO USE THE POLYIMIDE OR THE EQUIVALENT MATERIAL OF THE THICKNESS OF 50um OR MORE.

3. 材質
ハウジング : ガラス繊維入りLCP樹脂 UL94V-0（色：乳白色）
アクチュエーター : ガラス繊維入りPPS樹脂 UL94V-0（色：黒）
フロントコンタクト : 銅合金
リアコンタクト : 銅合金
ソルダーペグ : 銅合金

4. めっき
フロントコンタクト : 金めっき（ニッケル下地めっき）
リアコンタクト : 金めっき（ニッケル下地めっき）
ソルダーペグ : スズめっき（ニッケル下地めっき）

5. 本品は、Niダム仕様のコネクタである。

⑥ DIM. Mは、25POS. 以下に適用。

⚠ FPC の補強板には、厚さ50μm以上のポリイミドまたは相当材の使用を推奨する。

M ⑥	L	K	J	H	G	POS.	CONN. PART No.
—	15.6	14.4	15.0	16.1	17.1	51	~~2-2013496-1~~
—	13.8	12.6	13.2	14.3	15.3	45	1-2013496-8
—	12.6	11.4	12.0	13.1	14.1	41	1-2013496-6
—	12.0	10.8	11.4	12.5	13.5	39	1-2013496-5
—	9.6	8.4	9.0	10.1	11.1	31	1-2013496-1
—	9.0	7.8	8.4	9.5	10.5	29	1-2013496-0
—	8.4	7.2	7.8	8.9	9.9	27	2013496-9
6.9	6.6	5.4	6.0	7.1	8.1	21	~~2013496-6~~

THIS DRAWING IS A CONTROLLED DOCUMENT.

DIMENSIONS: mm

TOLERANCES UNLESS OTHERWISE SPECIFIED:
0 PLC ± 0.3
1 PLC ± 0.3
2 PLC ± 0.3
3 PLC ± 0.3
4 PLC ± 0.3
ANGLES ± 3°

MATERIAL: SEE NOTE 3

FINISH: SEE NOTE 4

DWN | CHK | APVD | PRODUCT SPEC | APPLICATION SPEC | WEIGHT

TE Connectivity

NAME
0.3FPC Narrow BF–L–1.2H
1.2mmH, 2.9mmW, GOLD PLATE

SIZE	CAGE CODE	DRAWING NO	RESTRICTED TO
A3	00779	C-2013496	—

CUSTOMER DRAWING | SCALE 10:1 | SHEET 2 OF 2 | REV E