TOSHIBA CMOS Digital Integrated Circuit Silicon Monolithic

TC7WBL3306CFK, TC7WBL3305CFK

Low Voltage / Low Capacitance Dual Bus Switch

The TC7WBL3306C and TC7WBL3305C are Low Voltage/Low Capacitance CMOS 4bit Bus Switches. The low ON-resistance of the switch allows connections to be made with minimal propagation delay time.

The TC7WBL33306C requires the output enable ($\overline{OE}$) input to be set high to place the output into the high impedance state, whereas the TC7WBL3305C requires the output enable (OE) input to be set low to place the output into the high impedance.

All inputs are equipped with protection circuits against static discharge.

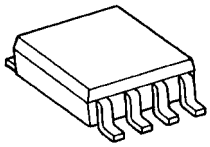

SSOP8-P-0.50A

Weight: 0.01 g (typ.)

Features

- Operating voltage : V_{CC} = 1.65 to 3.6 V
- ON-capacitance : $C_{I/O}$ = 7pF Switch On (typ.) @V_{CC} = 3V
- ON-resistance : R_{ON} = 6.0 Ω (typ.) @V_{CC} = 3V, $V_{I/O}$ = 0V
- ESD performance : Machine model ≥ ±200 V
  Human body model ≥ ±2000 V
- Power-down protection for inputs ($\overline{OE}$ and OE, I/O)
- Package : US8

Start of commercial production
2009-03

Pin Assignment (top view)

TC7WBL3306CFK

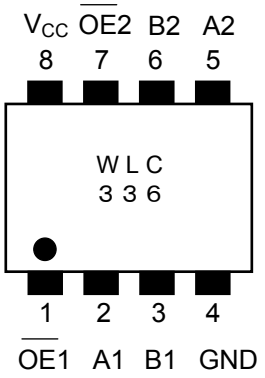

TC7WBL3305CFK

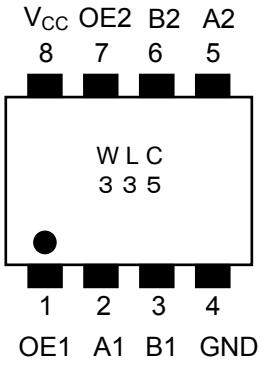

Truth Table

Inputs (3306C)	Inputs (3305C)	Function
$\overline{OE}$	OE	
L	H	A port = B port
H	L	Disconnect

System Diagram

TC7WBL3306C

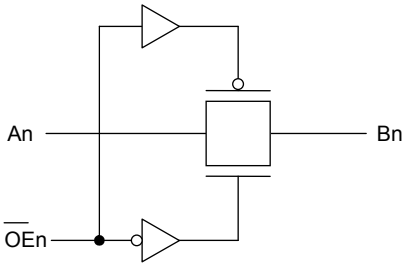

(n=1,2)

TC7WBL3305C

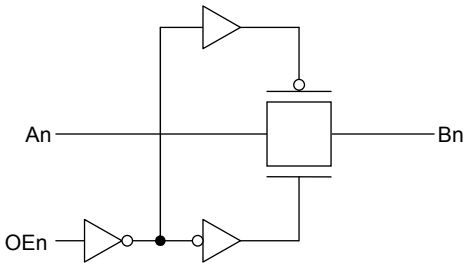

(n=1,2)

Absolute Maximum Ratings (Note)

Characteristic		Symbol	Rating	Unit
Power supply range		V_{CC}	−0.5 to 4.6	V
Control pin input voltage ($\overline{OE}$,OE)		V_{IN}	−0.5 to 4.6	V
Switch terminal I/O voltage	V_{CC}=0V or Switch=Off	V_S	−0.5 to 4.6	V
	Switch=On	V_S	−0.5 to V_{CC}+0.5	
Clump diode current		I_{IK}	−50	mA
Switch I/O current		I_S	50	mA
Power dissipation		P_D	200	mW
DC V_{CC}/GND current		I_{CC}/I_{GND}	±100	mA
Storage temperature		T_{stg}	−65 to 150	°C

Note: Exceeding any of the absolute maximum ratings, even briefly, lead to deterioration in IC performance or even destruction
Using continuously under heavy loads (e.g. the application of high temperature/current/voltage and the significant change in temperature, etc.) may cause this product to decrease in the reliability significantly even if the operating conditions (i.e. operating temperature/current/voltage, etc.) are within the absolute maximum ratings and the operating ranges.
Please design the appropriate reliability upon reviewing the Toshiba Semiconductor Reliability Handbook ("Handling Precautions"/"Derating Concept and Methods") and individual reliability data (i.e. reliability test report and estimated failure rate, etc).

Operating Ranges (Note)

Characteristic		Symbol	Rating	Unit
Power supply voltage		V_{CC}	1.65 to 3.6	V
Control pin input voltage ($\overline{OE}$,OE)		V_{IN}	0 to 3.6	V
Switch terminal I/O voltage	V_{CC}=0V or Switch=Off	V_S	0 to 3.6	V
	Switch=On	V_S	0 to V_{CC}	
Operating temperature		T_{opr}	−40 to 85	°C
Input rise and fall time		dt/dv	0 to 10	ns/V

Note: The operating ranges must be maintained to ensure the normal operation of the device.
Unused inputs must be tied to either V_{CC} or GND.

Electrical Characteristics

DC Characteristics (Ta = –40 to 85 °C)

Parameter		Symbol	Test Condition	V_{CC} (V)	Min	Typ. (Note1)	Max	Unit
Input voltage (OE, $\overline{OE}$)	"H" level	V_{IH}	—	1.65 to 3.6	0.7 × V_{CC}	—	—	V
	"L" level	V_{IL}	—	1.65 to 3.6	—	—	0.3 × V_{CC}	
Input leakage current (OE, $\overline{OE}$)		I_{IN}	V_{IN} = 0 to 3.6 V	1.65 to 3.6	—	—	±1.0	μA
Power-off leakage current		I_{OFF}	$\overline{OE}$,OE,A,B = 0 to 3.6 V	0	—	—	10	μA
Off-state leakage current (switch off)		I_{SZ}	A, B = 0 to V_{CC}, $\overline{OE}$ =V_{CC}(3306C) , OE=GND(3305C)	1.65 to 3.6	—	—	±1.0	μA
On resistance (Note2)		R_{ON}	V_{IS} = 0 V, I_{IS} = 30 mA (Note 1)	3.0	—	6.0	10.5	Ω
			V_{IS} = 3.0 V, I_{IS} = 30 mA (Note 1)	3.0	—	11	17	
			V_{IS} = 2.4V, I_{IS} = 15 mA (Note 1)	3.0	—	12	19	
			V_{IS} = 0 V, I_{IS} = 24 mA (Note 1)	2.3	—	6.5	12	
			V_{IS} = 2.3 V, I_{IS} = 24 mA (Note 1)	2.3	—	13	21	
			V_{IS} = 2.0V, I_{IS} = 15 mA (Note 1)	2.3	—	15	22	
			V_{IS} = 0 V, I_{IS} = 4 mA (Note 1)	1.65	—	8	14	
			V_{IS} = 1.65 V, I_{IS} = 4 mA (Note 1)	1.65	—	18	27	
Quiescent supply current		I_{CC}	V_{IN} = V_{CC} or GND, I_{OUT} = 0	3.6	—	—	10	μA

Note 1: All typical values are at Ta=25 °C.

Note 2: Measured by the voltage drop between A and B pins at the indicated current through the switch.
On resistance is determined by the lower of the voltages on the two (A or B) pins.

AC Characteristics (Ta = –40 to 85 °C)

Characteristics	Symbol	Test Condition	V_{CC} (V)	Min	Max	Unit
Output enable time	t_{pZL} t_{pZH}	Figure 1, Figure 2	3.3 ± 0.3	—	6	ns
			2.5 ± 0.2	—	7	
			1.8 ± 0.15	—	10	
Output disable time	t_{pLZ} t_{pHZ}	Figure 1, Figure 2	3.3 ± 0.3	—	6	ns
			2.5 ± 0.2	—	7	
			1.8 ± 0.15	—	10	

Capacitive Characteristics (Ta = 25°C)

Characteristics	Symbol	Test Condition	V_{CC} (V)	Typ.	Unit
Control pin input capacitance	C_{IN}	V_{IN} = 0 V (Note)	3.0	4	pF
Switch terminal capacitance (Switch Off)	$C_{I/O}$	$\overline{OE}$ = V_{CC} (3306C), OE=GND (3305C), V_{IS} = 0 V (Note)	3.0	3.5	pF
Switch terminal capacitance (Switch On)	$C_{I/O}$	$\overline{OE}$ = GND (3306C), OE=V_{CC} (3305C), V_{IS} = 0 V (Note)	3.0	7	pF

Note: This parameter is guaranteed by design

R_{ON} - V_{IS} Characteristic (typ.) Ta = 25 ℃

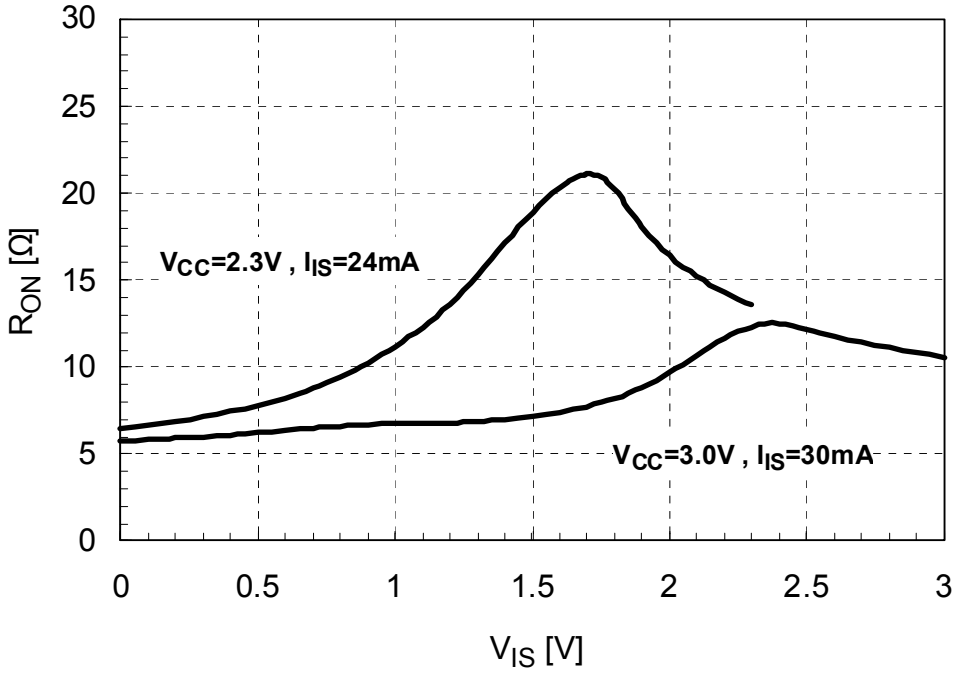

AC Test Circuit

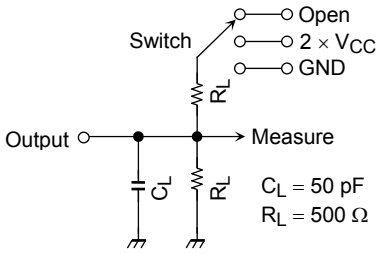

Parameter	Switch
t_{pLZ}, t_{pZL}	2 × V_{CC}
t_{pHZ}, t_{pZH}	GND

Figure 1

AC Waveform

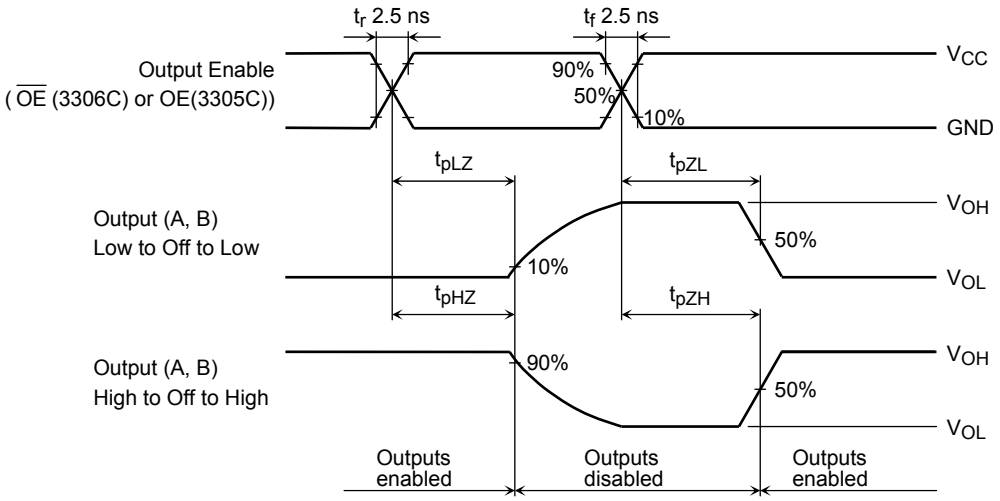

Figure 2 t_{pLZ}, t_{pHZ}, t_{pZL}, t_{pZH}

Rise and Fall Times (tr / tf) of the TC7WBL3306C, 3305C I/O Signals

The tr(out) and tf(out) values of the output signals are affected by the CR time constant of the input, which consists of the switch terminal capacitance ($C_{I/O}$) and the on-resistance (R_{ON}) of the input.

In practice, the tr(out) and tf(out) values are also affected by the circuit's capacitance and resistance components other than those of the TC7WBL3306C, 3305C.

The tr(out) / tf(out) values can be approximated as follows. (Figure 3 shows the test circuit.)

$$tr(out) / tf(out)\ (approx) = -(C_{I/O} + C_L) \cdot (R_{DRIVE} + R_{ON}) \cdot \ln(((V_{OH} - V_{OL}) - V_M) / (V_{OH} - V_{OL}))$$

where R_{DRIVE} is the output impedance of the previous-stage circuit.

Calculation example:

$$tr(out)\ (approx) = -(7 + 15)E\text{-}12 \cdot (120 + 6) \cdot \ln(((3.0 - 0) - 1.5) / (3.0 - 0))$$
$$\approx 1.9\ ns$$

Calculation conditions:

V_{CC} = 3.0 V, C_L = 15 pF, R_{DRIVE} = 120 Ω (output impedance of the previous IC), V_M = 1.5 V (V_{CC} / 2)
Output of the previous IC = digital (i.e., high-level voltage = V_{CC}; low-level voltage = GND)

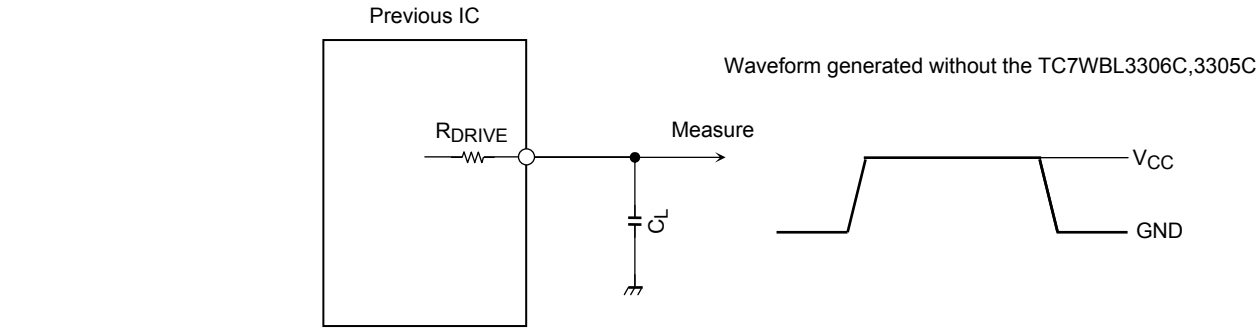

R_{DRIVE} = output impedance of the previous IC

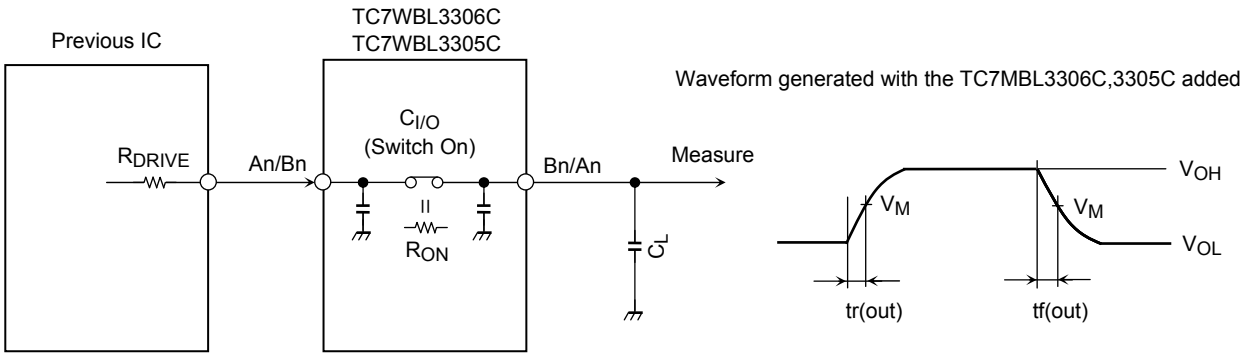

R_{DRIVE} = output impedance of the previous IC

Parameter	V_{CC}		
	3.3 ± 0.3 V	2.5 ± 0.2 V	1.8 ± 0.15 V
V_M	V_{CC} / 2	V_{CC} / 2	V_{CC} / 2

Figure 3 Test Circuit

Package Dimensions

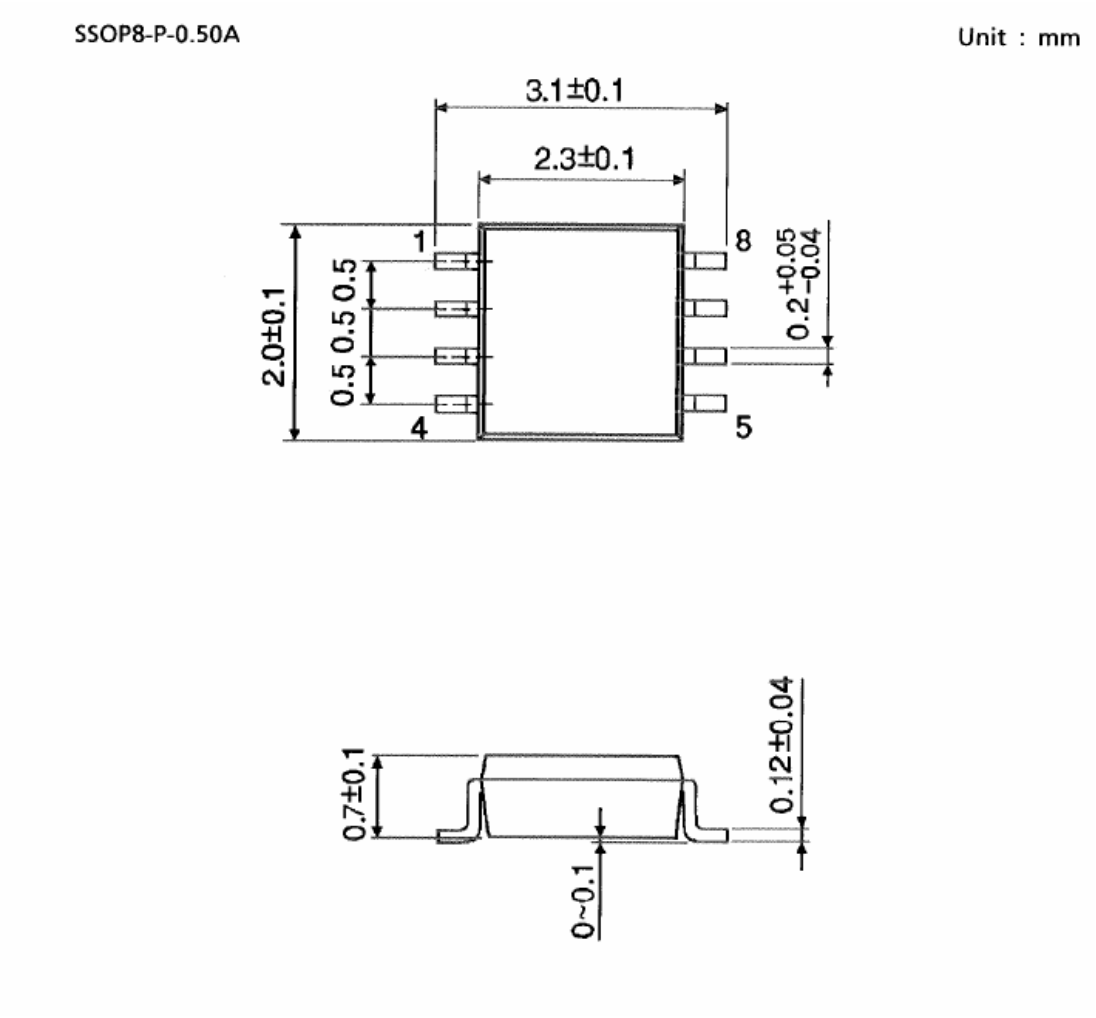

Weight: 0.01 g (typ.)

RESTRICTIONS ON PRODUCT USE

- Toshiba Corporation, and its subsidiaries and affiliates (collectively "TOSHIBA"), reserve the right to make changes to the information in this document, and related hardware, software and systems (collectively "Product") without notice.
- This document and any information herein may not be reproduced without prior written permission from TOSHIBA. Even with TOSHIBA's written permission, reproduction is permissible only if reproduction is without alteration/omission.
- Though TOSHIBA works continually to improve Product's quality and reliability, Product can malfunction or fail. Customers are responsible for complying with safety standards and for providing adequate designs and safeguards for their hardware, software and systems which minimize risk and avoid situations in which a malfunction or failure of Product could cause loss of human life, bodily injury or damage to property, including data loss or corruption. Before customers use the Product, create designs including the Product, or incorporate the Product into their own applications, customers must also refer to and comply with (a) the latest versions of all relevant TOSHIBA information, including without limitation, this document, the specifications, the data sheets and application notes for Product and the precautions and conditions set forth in the "TOSHIBA Semiconductor Reliability Handbook" and (b) the instructions for the application with which the Product will be used with or for. Customers are solely responsible for all aspects of their own product design or applications, including but not limited to (a) determining the appropriateness of the use of this Product in such design or applications; (b) evaluating and determining the applicability of any information contained in this document, or in charts, diagrams, programs, algorithms, sample application circuits, or any other referenced documents; and (c) validating all operating parameters for such designs and applications. **TOSHIBA ASSUMES NO LIABILITY FOR CUSTOMERS' PRODUCT DESIGN OR APPLICATIONS.**
- **PRODUCT IS NEITHER INTENDED NOR WARRANTED FOR USE IN EQUIPMENTS OR SYSTEMS THAT REQUIRE EXTRAORDINARILY HIGH LEVELS OF QUALITY AND/OR RELIABILITY, AND/OR A MALFUNCTION OR FAILURE OF WHICH MAY CAUSE LOSS OF HUMAN LIFE, BODILY INJURY, SERIOUS PROPERTY DAMAGE AND/OR SERIOUS PUBLIC IMPACT ("UNINTENDED USE").** Except for specific applications as expressly stated in this document, Unintended Use includes, without limitation, equipment used in nuclear facilities, equipment used in the aerospace industry, medical equipment, equipment used for automobiles, trains, ships and other transportation, traffic signaling equipment, equipment used to control combustions or explosions, safety devices, elevators and escalators, devices related to electric power, and equipment used in finance-related fields. **IF YOU USE PRODUCT FOR UNINTENDED USE, TOSHIBA ASSUMES NO LIABILITY FOR PRODUCT.** For details, please contact your TOSHIBA sales representative.
- Do not disassemble, analyze, reverse-engineer, alter, modify, translate or copy Product, whether in whole or in part.
- Product shall not be used for or incorporated into any products or systems whose manufacture, use, or sale is prohibited under any applicable laws or regulations.
- The information contained herein is presented only as guidance for Product use. No responsibility is assumed by TOSHIBA for any infringement of patents or any other intellectual property rights of third parties that may result from the use of Product. No license to any intellectual property right is granted by this document, whether express or implied, by estoppel or otherwise.
- **ABSENT A WRITTEN SIGNED AGREEMENT, EXCEPT AS PROVIDED IN THE RELEVANT TERMS AND CONDITIONS OF SALE FOR PRODUCT, AND TO THE MAXIMUM EXTENT ALLOWABLE BY LAW, TOSHIBA (1) ASSUMES NO LIABILITY WHATSOEVER, INCLUDING WITHOUT LIMITATION, INDIRECT, CONSEQUENTIAL, SPECIAL, OR INCIDENTAL DAMAGES OR LOSS, INCLUDING WITHOUT LIMITATION, LOSS OF PROFITS, LOSS OF OPPORTUNITIES, BUSINESS INTERRUPTION AND LOSS OF DATA, AND (2) DISCLAIMS ANY AND ALL EXPRESS OR IMPLIED WARRANTIES AND CONDITIONS RELATED TO SALE, USE OF PRODUCT, OR INFORMATION, INCLUDING WARRANTIES OR CONDITIONS OF MERCHANTABILITY, FITNESS FOR A PARTICULAR PURPOSE, ACCURACY OF INFORMATION, OR NONINFRINGEMENT.**
- Do not use or otherwise make available Product or related software or technology for any military purposes, including without limitation, for the design, development, use, stockpiling or manufacturing of nuclear, chemical, or biological weapons or missile technology products (mass destruction weapons). Product and related software and technology may be controlled under the applicable export laws and regulations including, without limitation, the Japanese Foreign Exchange and Foreign Trade Law and the U.S. Export Administration Regulations. Export and re-export of Product or related software or technology are strictly prohibited except in compliance with all applicable export laws and regulations.
- Please contact your TOSHIBA sales representative for details as to environmental matters such as the RoHS compatibility of Product. Please use Product in compliance with all applicable laws and regulations that regulate the inclusion or use of controlled substances, including without limitation, the EU RoHS Directive. **TOSHIBA ASSUMES NO LIABILITY FOR DAMAGES OR LOSSES OCCURRING AS A RESULT OF NONCOMPLIANCE WITH APPLICABLE LAWS AND REGULATIONS.**