# MSD INC. ENGINEERING DATA SHEET

| | | |
|---|---|---|
| RELAY TYPE: FCB-205-B71 | COMPUTER PART No.: 9347544 | TEST PROCEDURE MSDP-791 |
| CUSTOMER/SPECIFICATION: CATALOG ITEM | REV NONE | |

TEST REQUIREMENTS

COIL RES.: 20 OHMS ±10% OPERATE TIME: 5mS MAX RELEASE TIME: 5mS MAX

CONTACT MAKE BOUNCE: 1mS MAX N.O. BREAK BOUNCE: N/A

CONTACT STABILIZATION TIME: N/A RATED COIL VOLTAGE: 6Vdc

CONTACT RES.: MFG TEST: .040 OHMS @ 10mA-6VdcFINAL TEST: .050 OHMS @ 10mA-6Vdc

CONTACT VOLTAGE DROP: FINAL TEST: .100 V MAX @ 5A - 6Vdc

HI-POT: 1000 Vrms ALL POINTS

INSULATION RESISTANCE: 100 MEGOHMS MIN. @ 500 Vdc

VIBRATION: N/A

SEAL TEST: $1 \times 10^{-8}$ MAX LEAK RATE COIL TRANSIENT SUPPRESSION: N/A

OTHER:

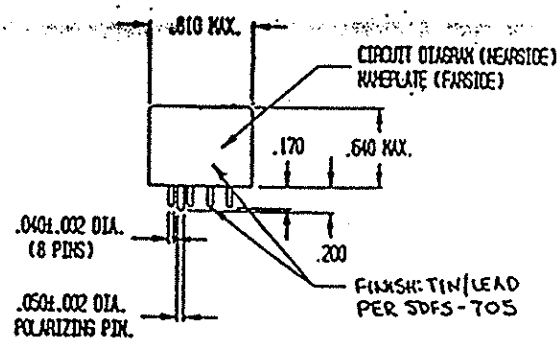


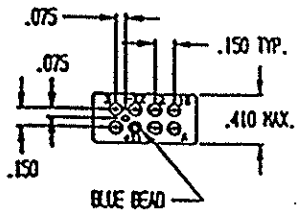


| Prepared By: Date | Approved By: Date |
|---|---|
| LES WYNNE 3-20-96 | S. Lodyga 3-21-96 |

| Rev | ECN No. | Date |
|---|---|---|
| C | 97-248 | 12-29-97 |

SPECIAL INSTRUCTIONS