TOSHIBA
Leading Innovation >>>

2011-4

PRODUCT GUIDE

Power Transistors

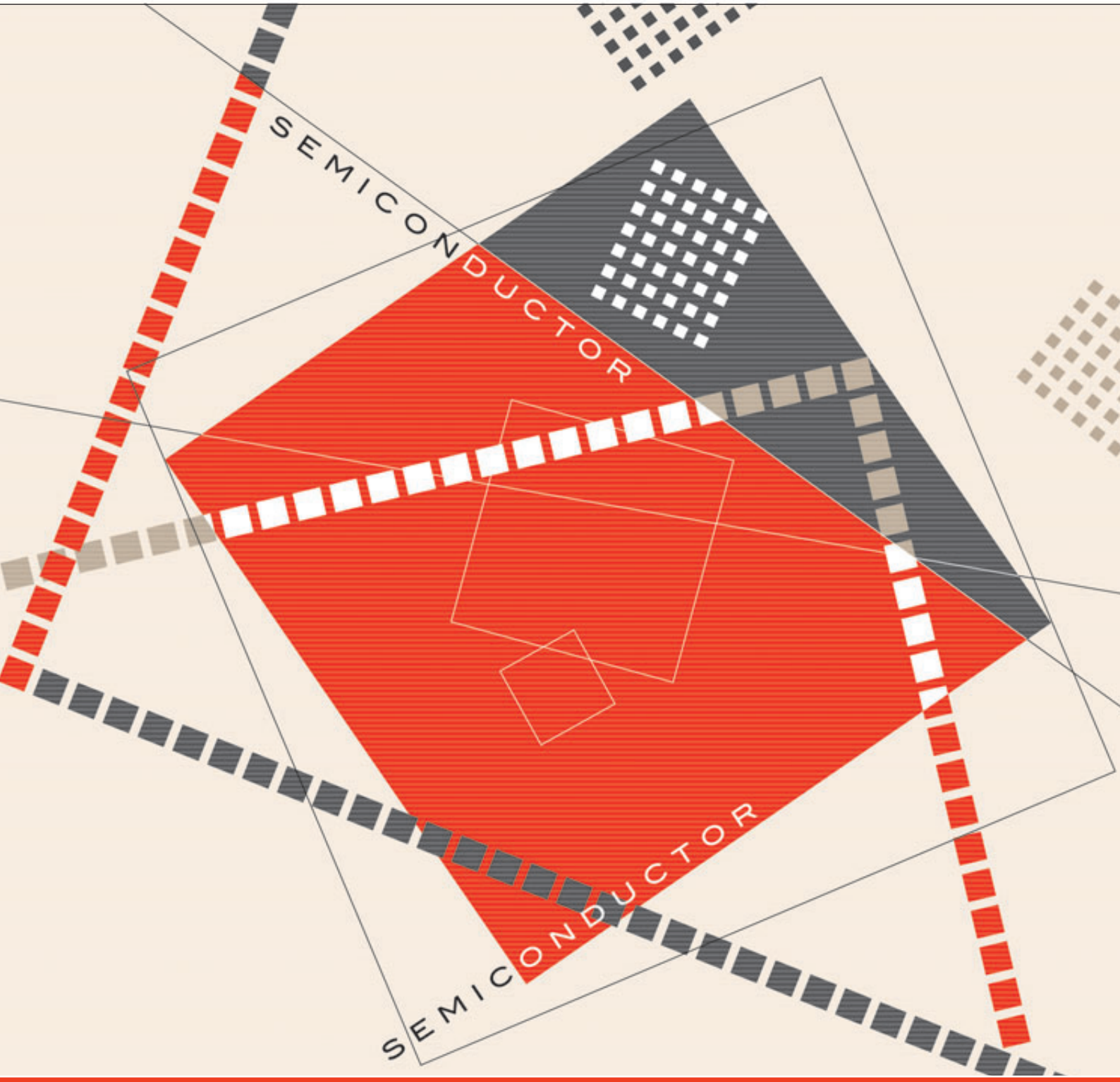

• SEMICONDUCTOR •

http://www.semicon.toshiba.co.jp/eng

Toshiba Power Transistors

Thank you for purchasing Toshiba semiconductor products.
As you may already know, semiconductor products are used in a wide range of fields, both domestic and industrial.
This product guide includes a list of products categorized by functions and applications, a list of packages, tape packing information, a list of lead-formed products, an overall list of devices and a set of package diagrams. We hope that this guide will assist you in selecting products. For further details of specific devices, please refer to the relevant technical datasheets.

Power Transistors for Switching Power Supplies

Using a crystal mesh pattern, Toshiba has reduced the storage time (t_{stg}) and fall time (t_f) of 400-V and 800-V power transistors for switching power supplies.
In addition, we have developed power transistors in a low-profile package.
These types of transistor are suitable for low-output AC adapters and ballast lamp applications.

Power Transistors for Audio Power Amplifiers

Using a minute pattern and a high-density MET design, Toshiba has achieved high levels of current efficiency.
Package type can be selected to yield collector power output ranging from 60 W to 220 W. A wider selection of packages, including the TO-3P(N) and TO-3P(L), is available.

Power Transistor

Power Transistor SMD Series

With smaller and thinner electronic devices fuelling demand for SMD-type power transistors, Toshiba provides the following packages to meet manufacturers' needs.

• PW-Mini • PW-Mold
• TSM • VS-6 • PS-8 • SMV

Low $V_{CE(sat)}$ Transistor Series

Toshiba power transistors feature a V_{CEO} of 10 V to 100 V and an I_C of 1 A to 7 A, with various surface-mount packages. Ultra-high-speed switching transistors and transistors with SBDs and S-MOSes are also available.

CONTENTS

Selection Guide by Functions and Applications ····· 4
■ Radio-Frequency Switching Power Transistors (2SA****/2SC****/TTA****/TTC****) ··· 4
■ Low-Frequency Power Transistors (2SB****/2SD****/TTB****/TTD****) ··· 7
■ Audio Power Amplifiers ····· 8
■ Vertical-Deflection Outputs ····· 9
■ Sound Outputs ····· 9
■ Speed Modulations ····· 9
■ Dynamic Focuses ····· 9
■ Power Supplies ····· 10
  V_{CEO} and I_C Rating Lineup ····· 10
■ Switching Power Supplies ····· 11
  AC-DC Converters ····· 11
■ Switching Transistors in Low-Profile Through-Hole Package ····· 12
■ Low $V_{CE(sat)}$ Series ····· 13
■ Ultra-High-Speed Switching Series ····· 14
■ Transistors for MOS Gate Drivers / Compact Motor Drivers ····· 15
Recommended Transistors for Various Application Circuits ··· 16
■ Inverter Circuits for LCD Backlighting ····· 16
■ Strobe Circuits for DSCs / Cameras ····· 16
■ Battery Charge Circuits ····· 17
■ General-Purpose Load Switches ····· 17
■ HDD Dropper Power Supplies ····· 18
■ DC-DC Converters for Various Information Devices ····· 18
■ Self-Excited DC-DC Converters for AC Adapters Used in Cell Phones / Amusement Equipment ··· 19
■ Audios ····· 19
■ For High-Voltage Power Supplies ····· 20
Product Lineup by Packages ····· 21
■ LSTM ····· 21
■ MSTM ····· 22
■ TO-126 ····· 23
■ TO-220 Series ····· 24
  TO-220NIS [isolation package] ····· 24
■ TO-3P Series ····· 25
  TO-3P(N) ····· 25
  TO-3P(N)IS [isolation package] ····· 25
  TO-3P(L) ····· 26
■ PW-Mini(SC-62) ····· 27
■ TFP ····· 27
■ PW-Mold(SC-63/64) ····· 28
■ TSM ····· 29
■ SMV ····· 29
■ VS-6 ····· 30
■ PS-8 ····· 30
Standard Tape Packing for Automated Pick-and-Place Assembly ··· 31
Standard Lead-Formed Product Lineup ····· 33
Package Lineup ····· 34
Product Index ····· 37

Radio-Frequency Switching Power Transistors (2SA**** / 2SC**** / TTA**** / TTC****)

V_{CEO}(V) / I_C(A)	10/(15)			(18)/20			(25)/30			40			45			50		
0.2													2SA1483		(◎)			
0.8							2SA1426 2SA1204	2SC2884	(§) (◎)									
1	TPC6D02 (15 V)		(&)(△)				HN4B101J (NPN: 1.2A)		(M)(V)							2SA2070 TPC6901A (PNP: 0.7A) TPCP8901 (PNP: 0.8A) TTA007 TPC6604	TPC6701 2SC5810 TTC007 TPC6504	(◎) (W)(△) (◎) (M)(△) (M)(P) (T) (T) (△) (△)
1.2				TPC6D03		(&)(△)	TPCP8801		(W)(P)									
1.5	2SA2058		(T)	2SA2065 2SA2069 ■S3F56	2SC5784 2SC5819 TPC6503	(T) (T) (◎) (◎) (△) (△)	2SA966 2SA1203	2SC2236	(*) (◎)									
2	2SA1160 2SA1430 2SA2066 TPC6602	2SC3670 2SC5755 2SC5785 TPC6501 TPCP8504	(§) (◎) (T) (◎) (△) (△) (P)				TPCP8902 TPC6902 (PNP: 1.7A) HN4B102J (PNP: 1.8A)		(M)(P) (M)(△) (M)(V)		2SC3673	(§)				2SA1020 2SA1241 2SA1382 2SA2056 TPC6601 2SA2060 2SA1428 2SA1680	2SC2655 2SC3076 TPCP8701 2SC3668 2SC4408	(*) (◇) (*) (T) (△) (W)(P) (◎) (§) (*)
2.5				2SA2061		(T)											2SC5692 2SC6033	(T) (T)
3		2SC4682 (15 V) 2SC4683 (15 V)	(*) (§)	2SA2059 TPCP8F01 TPC6603 TPCP8G01		(◎) ($)(P) (△) ($)(P)		2SC5976 TPCP8H02	(T) ($)(P)		2SC3422	(@)				TPCP8602 2SA1761 2SA1869	 2SC4604 2SC4935 2SC5712 TPC6502 TPCP8505 2SC6126	(P) (*) (▲) (◎) (△) (P) (◎)
3.5					2SC5738	(T)												
4		2SC5713 ■S3F61	(◎) (△)	TPCP8601	2SC5714 2SC6125 ■S3F62	(◎) (◎) (△) (P)		2SC5906	(T)								2SC5703	(T)
5				2SA1242 2SA1431	2SC3072 2SC3671 2SC6052	(◇) (§) (◇) (§) (◇)		2SC6062	(T)							2SA1244 2SA1931 2SA2097	2SC3074 2SC4881 2SC5886 2SC5886A TPCP8H01 ■S3H32	(◇) (▲) (◇) (◇) (◇) ($)(P) (◇)
7																	2SC6000	(◇)

Part number **in red** signifies a new product. ■ : Being planned (indicating prototype part number)

Legend

(*) LSTM	(§) MSTM	(@) TO-126	(▲) TO-220NIS	(▽) TO-3P(N)	(▼) TO-3P(N)IS	(※) TO-3P(L)	(◎) PW-Mini
(◇) PW-Mold	(T) TSM	(△) VS-6	(P) PS-8	(V) SMV	(W) 2 in 1 NPN(or PNP) x 2		
(&) 2-in-1 (Transistor + Diode)		(M) 2 in 1 NPN+PNP	($) Transistor + S-MOS		Part number in italic signifies built-in damper diode		
2SA**** / 2SC****: complementary							

V_{CEO}(V) / I_C(A)	80			100			120			(140)/150			160		
0.05										2SA1145 2SA1360 2SA949	2SC3423 2SC2229	(@) (＊)			
0.1														2SC2230	(＊)
0.4	2SA817A 2SA1202	2SC2882	(◎)												
0.8							2SA965 2SA1425	2SC2235 2SC3665	(＊) (§)						
1							TPCP8603	TPCP8507 TPCP8510 2SC6061	(P) (P) (T)				2SA1013	2SC2383	(＊)
1.5											2SC2073A	(▲)	2SA1225 2SA2219 TTA004	2SC6139 TTC004	(◇) (§) (@)
2	2SA1315 2SA1429 2SA2206	2SC3328 2SC3669 2SC6079 2SC6124	(＊) (§) (§) (◎)		TPCP8501	(P)									
3	2SA1926 TTA003	2SC6076 TTC009	(§) (◇) (◇) (▲)												
5		2SC3303	(◇)												
6		2SC4688 2SC5196	(▼) (▽)												
8								2SC4689 2SC5197	(▼) (▽)						
10										2SA1941	2SC4690 (140 V) 2SC5198 (140 V)	(▼) (▽)			
12	2SA1452A	2SC3710A	(▲)										2SA1942	2SC5199	(※)
18													TTA0001 TTA0002	TTC0001 TTC0002	(▽) (※)

Part number **in red** signifies a new product.

Legend

(＊) LSTM	(§) MSTM	(@) TO-126	(▲) TO-220NIS	(▽) TO-3P(N)	(▼) TO-3P(N)IS	(※) TO-3P(L)	(◎) PW-Mini
(◇) PW-Mold	(T) TSM	(△) VS-6	(P) PS-8	(V) SMV	(W) 2 in 1 NPN(or PNP) x 2		
(&) 2-in-1 (Transistor + Diode)		(M) 2 in 1 NPN+PNP	($) Transistor + S-MOS		Part number in italic signifies built-in damper diode		
2SA＊＊＊＊ / 2SC＊＊＊＊: complementary							

V_{CEO}(V) / I_C(A)	180			200			230			300			400(370)		
0.05														2SC5122 2SC5307	(＊) (◎)
0.1		2SC2230A	(＊)							2SA1432 2SA1384	2SC3672 2SC2482 2SC4544 2SC3515	(§) (＊) (▲) (◎)			
0.3													TPCP8604		(P)
0.5													2SA1971 2SA1972	TTC013 (350 V)	(◎) (＊) (◎)
0.8														2SC5458	(◇)
1							2SA1837	2SC4793 TTC011	(▲) (@)		2SC5930 (285 V) 2SC6010 (285 V) 2SC6034 (285 V) TTC005 (285 V)	(§) (§) (§) (◎)		2SC5549 2SC6042 (375 V) 2SC6040 (410 V) ■TPCP8508 (375 V)	(＊) (§) (§) (P)
1.5											TTC008 (285 V)	(◇)		2SC6142 (375 V) TTC13003L TTC003	(◇) (＊) (◇)
2		2SC5171	(▲)										2SA2034	2SC5548 (370 V) 2SC5548A TTC012 (375 V)	(◇) (◇) (◇)
3														2SC5459	(▲)
5														2SC5172 ■2SC6138 (375 V)	(▲) (◇)
10														2SC5352	(▽)
12				2SA2120 2SA2121	2SC5948 2SC5949	(▽) (※)									
15							2SA1943 TTA1943 2SA1962 2SA1986 2SA1987	2SC5200 TTC5200 2SC5242 2SC5358 2SC5359	(※) (※) (▽) (▽) (※)						

V_{CEO}(V) / I_C(A)	(550)/600			800			1000/(1200)		
0.05		2SC5201	(＊)		2SC5460 2SC5466 2SC6127	(@) (▲) (◇)		2SC4686 2SC4686A (1200 V)	(▲) (▲)
0.5	2SA2142		(◇)						
0.8					2SC3405	(◇)			
1	2SA2184 (550 V)		(◇)						
3					2SC5353	(▲)			
5					2SC5354	(▽)			
10					2SC3307	(※)			

Part number **in red** signifies a new product. ■ : Being planned (indicating prototype part number)

Legend

(＊) LSTM	(§) MSTM	(@) TO-126	(▲) TO-220NIS	(▽) TO-3P(N)	(▼) TO-3P(N)IS	(※) TO-3P(L)	(◎) PW-Mini
(◇) PW-Mold	(T) TSM	(△) VS-6	(P) PS-8	(V) SMV	(W) 2 in 1 NPN(or PNP) x 2		
(&) 2-in-1 (Transistor + Diode)		(M) 2 in 1 NPN+PNP	($) Transistor + S-MOS		Part number in italic signifies built-in damper diode		
2SA＊＊＊＊ / 2SC＊＊＊＊: complementary							

Low-Frequency Power Transistors (2SB**** / 2SD**** / TTB**** / TTD****)

V_{CEO}(V) TM	30			40			60/(65)			80			100		
0.8								*2SD2719*	(¥)(%)(T)						
1								*2SD2686*	(¥)(%)(◎)						
1.5		2SD1140 2SD1631	(%) (*) (%) (§)												
2								*2SD2088* *2SD2695* 2SD2352	(¥)(%)(*) (¥)(%)(*) (▲)	*2SB1067*	*2SD1509*	(%) (@)	*2SB1457*	*2SD2206* *2SD2536*	(%) (*) (¥)(%)(*)
3				*2SB907*		(%) (◇)	2SB906 2SB1375 TTB001 TTB002	2SD1221 2SD2012	(◇) (▲) (♣) (◇)				*2SB1495*	*2SD2257* *2SD2092* *2SD2129*	(%) (▲) (▲) (%) (▲)
4								*2SD2204* (65 V)	(¥)(%)(▲)	*2SB908*	*2SD1223*	(%) (◇)	*2SB1481*	*2SD2241*	(%) (▲)
5								*2SD2131*	(¥)(%)(▲)					*2SD2079* *2SD2604*	(%) (▲) (¥)(%)(▲)
7													*2SB1020A*	*2SD1415A*	(%) (▲)
15														*2SD1662*	(%) (▽)
30														*2SD1525*	(%) (※)

V_{CEO}(V) I_C(A)	120			150/(160)			450		
0.9		*TPCP8L01*	(&)(H)(P)						
1.5				2SB905	2SD1220	(◇)			
8					2SD2636 (160 V)	(%) (▽)			
15								2SD1314	(%) (※)

Part number **in red** signifies a new product.

Legend

(*) LSTM	(§) MSTM	(@) TO-126	(▲) TO-220NIS	(▽) TO-3P(N)	(▼) TO-3P(N)IS	(※) TO-3P(L)	(◎) PW-Mini
(◇) PW-Mold	(¥) Built-in zener diode	(%) Darlington	(T) TSM	(P) PS-8	(♣) TFP	(H) Built-in HED	
Part number in italic signifies built-in freewheel diode		2SB**** / 2SD****: complementary		(&) Transistor + Diode			

Audio Power Amplifiers

Single Transistors

Pc (W)	Absolute Maximum Ratings VCEO (V)	Absolute Maximum Ratings IC (A)	Polarity	New Product	Discontinued Product		Package
100	140	10	NPN	**2SC5198**	2SC3182N	2SD1148	TO-3P(N)
			PNP	**2SA1941**	2SA1265N	2SB863	
120	160	12	NPN	**2SC5199**	2SC3280		TO-3P(L)
			PNP	**2SA1942**	2SA1301		
130	230 (180)	15 (12)	NPN	**2SC5242**	2SC3907		TO-3P(N)
			PNP	**2SA1962**	2SA1516		
150	160	18	NPN	**TTC0001**			TO-3P(N)
			PNP	**TTA0001**			
150	230	15	NPN	**2SC5358**			TO-3P(N)
			PNP	**2SA1986**			
150	230 (200)	15	NPN	**2SC5200**	2SC3281		TO-3P(L)
			PNP	**2SA1943**	2SA1302		
150	230	15	NPN	**TTC5200**			TO-3P(L)
			PNP	**TTA1943**			
180	160	18	NPN	**TTC0002**			TO-3P(L)
			PNP	**TTA0002**			
180	230	15	NPN	**2SC5359**			TO-3P(L)
			PNP	**2SA1987**			
200	200	12	NPN	**2SC5948**			TO-3P(N)
			PNP	**2SA2120**			
220	200	15	NPN	**2SC5949**			TO-3P(L)
			PNP	**2SA2121**			

( ): Absolute Maximum rating of discontinued products

Driver Amplifier

Single Bipolar Transistors

Pc (W)	NPN	PNP	Package
0.9	**2SC2235**	**2SA965**	LSTM
1	**2SC3665**	**2SA1425**	MSTM
	2SC6139	**2SA2219**	
5	**2SC3423**	**2SA1360**	TO-126
10	**TTC004**	**TTA004**	
20	**2SC4793**	**2SA1837**	TO-220NIS

Output Amplifier

Single Bipolar Transistors

Non-isolation type

Pc (W)	NPN	PNP	Package
100	**2SC5198**	**2SA1941**	TO-3P(N)
120	**2SC5199**	**2SA1942**	TO-3P(L)
130	**2SC5242**	**2SA1962**	TO-3P(N)
150	**2SC5358**	**2SA1986**	
	TTC0001	**TTA0001**	
	2SC5200	**2SA1943**	TO-3P(L)
	TTC5200	**TTA1943**	
180	**2SC5359**	**2SA1987**	
	TTC0002	**TTA0002**	
200	**2SC5948**	**2SA2120**	TO-3P(N)
220	**2SC5949**	**2SA2121**	TO-3P(L)

Part number **in red** signifies a new product.

Vertical-Deflection Outputs

Characteristics \ Package	LSTM
V_{CEO} = 160 V, I_C = 1 A	**2SC2383** **2SA1013**
Package Shape	

Sound Outputs

Characteristics \ Package	LSTM
V_{CEO} = 160 V, I_C = 1 A	**2SC2383** **2SA1013**
V_{CEO} = 160 V I_C = 0.1 to 0.2 A	**2SC2230** x **2**
V_{CEO} = 180 V I_C = 0.1 to 0.2 A	**2SC2230A** x **2**
Package Shape	

Speed Modulations

Part Number		I_C	V_{CEO}	P_C	h_{FE}			$V_{CE(sat)}$ Max			f_T Typ.			Cob Typ.		Package
NPN	PNP	(A)	(V)	(W)		V_{CE} (V)	I_C (A)	(V)	I_C (mA)	I_B (mA)	(MHz)	V_{CE} (V)	I_C (A)	(pF)	V_{CB} (V)	
2SC4793	–	1.0	230	20	100 to 320	5	0.1	1.5	500	50	100	10	0.1	20	10	TO-220NIS
–	**2SA1837**										70			30		

Dynamic Focuses

Part Number	I_C	V_{CEO}	V_{CBO}	P_C	h_{FE}			$V_{CE(sat)}$ Max			f_T Typ.			Cob Typ.		Package
	(mA)	(V)	(V)	(W)		V_{CE} (V)	I_C (mA)	(V)	I_C (mA)	I_B (mA)	(MHz)	V_{CE} (V)	I_C (mA)	(pF)	V_{CB} (V)	
2SC4686	50	1000	1500	10	15 to 60	5	3	1.5	10	2	5.5	10	3	2.2	100	TO-220NIS
2SC4686A		1200														
2SC5460	50	800	800	10	15(min)	5	7	1.0	20	4	5.5	10	3	2.2	100	TO-126
2SC5466																TO-220NIS

Power Supplies

(V_{CEO} = 285 to 450 V)

Package / I_C (A)	PW-Mold (SC-63/64)	TO-220NIS	TO-3P(N)	TO-3P(L)	MSTM
0.8	**2SC5458**				
1	**TTC003 (1.5A)** **2SC6142 (1.5A)** **TTC008 (1.5A)**				**2SC5930** **2SC6010** **2SC6034** **2SC6042** **2SC6040**
2	**2SC5548** **2SC5548A** **TTC012**				
3		**2SC5459** **2SC5353#**			
5		**2SC5172**	**2SC5354#**		
10			**2SC5352**	**2SC3307#**	
Package Shape		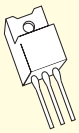	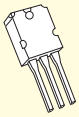	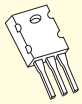	

Part number **in red** signifies a new product.

#: 800 V series

V_{CEO} and I_C Rating Lineup

I_C (A) \ V_{CEO} (V)	285	400	800
0.8 to 1	**2SC5930** **2SC6010** **2SC6034**	**2SC5458** **2SC6042 (375 V)** **2SC6040 (410 V)**	
0.8 to 1.5	**2SC6142** **TTC008**	**TTC003**	
2 to 3		**2SC5459** **2SC5548 (370 V)** **2SC5548A** **TTC012 (375 V)**	**2SC5353**
5		**2SC5172**	**2SC5354**
8 to 10		**2SC5352**	**2SC3307**

Part number **in red** signifies a new product.

Switching Power Supplies

AC-DC Converters

Application	Part Number	Absolute Maximum Ratings (Ta = 25˚C)				Package
		V_{CBO} (V)	V_{CEO} (V)	I_C (A)	P_C (W) (Tc = 25˚C *Ta = 25˚C)	
Switching Regulators	**2SC5930**	600	285	1	1.0*	MSTM
	2SC6010			1	1.0*	MSTM
	2SC6034			1	1.0*	MSTM
	TTC008			1.5	1.1*	PW-Mold
	2SC5548		370	2	15	PW-Mold(SC-63/64)
	2SC5548A		400	2	15	PW-Mold(SC-63/64)
	2SC5458			0.8	10	PW-Mold(SC-63/64)
	TTC003			1.5	1.1*	PW-Mold(SC-63/64)
	2SC5459			3	25	TO-220NIS
	2SC5172			5	25	TO-220NIS
	2SC5352			10	80	TO-3P(N)
	2SC6042	800	375	1	1.0*	MSTM
	2SC6040		410	1	1.0*	MSTM
	2SC6142		375	1.5	1.1*	PW-Mold(SC-64)
	TTC012			2	1.1*	PW-Mold
	2SC5353	900	800	3	25	TO-220NIS
	2SC5354			5	100	TO-3P(N)
	2SC3307			10	150	TO-3P(L)

Part number **in red** signifies a new product.

Switching Transistors in Low-Profile Through-Hole Package

■ Features

Small Size and Light Weight
- Low-profile through-hole package
- Supplied in tape and reel packaging

Low Power Dissipation and High Efficiency
- High-speed switching: Reduced tf
- High-current amplification: High h_{FE}
- Low standby power: High h_{FE} at low collector current

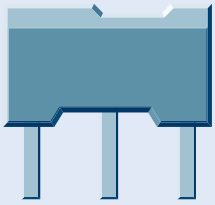

MSTM package

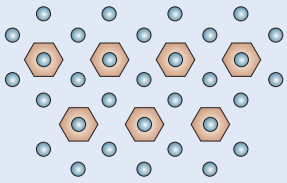

Crystal mesh pattern

Low-profile package + Automated pick-and-place assembly + High-efficiency chip = Suitable for AC adapters

■ Through-Hole Package Comparison (height above PCB)

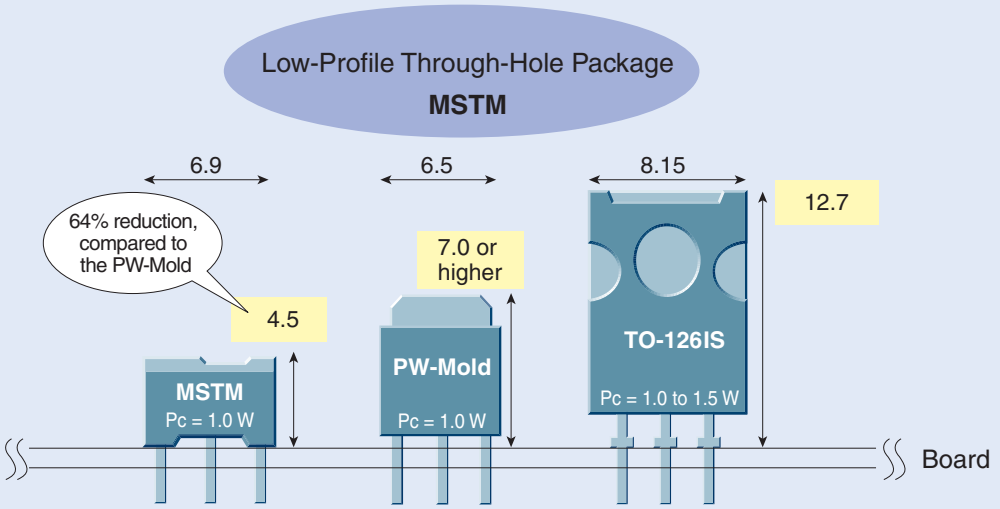

Unit: mm

■ Electrical Characteristics

Part Number	Absolute Maximum Ratings			Package	DC Characteristics									Switching Characteristics		
					h_{FE}(1) Min			h_{FE}(2) Min			$V_{CE(sat)}$ Max			tr Max	tstg Max	tf Max
	V_{CBO} (V)	V_{CEO} (V)	I_C (A)			V_{CE} (V)	I_C (mA)		V_{CE} (V)	I_C (A)	(V)	I_C (A)	I_B (A)	(μs)		
2SC5930	600	285	1	**MSTM**	30	5	1	40	5	0.2	1.0	0.6	0.075	0.5	3.0	0.3
2SC6010	600	285	1	**MSTM**	80	5	1	100	5	0.1	1.0	0.6	0.075	0.4	3.0	0.24
2SC6034	600	285	1	**MSTM**	100	5	1	125	5	0.1	1.0	0.6	0.075	0.4	3.5	0.24
TTC008	600	285	1.5	**PW-Mold**	80	5	1	100	5	0.3	1.0	0.5	0.0625	0.05 (typ.)	3.3 (typ.)	0.1 (typ.)
TTC003	600	400	1.5	**PW-Mold**	13	5	1	20	5	0.3	1.0	1.2	0.15	0.15 (typ.)	1.7 (typ.)	0.1 (typ.)
2SC6042	800	375	1	**MSTM**	80	5	1	100	5	0.1	1.0	0.8	0.1	0.5	4.5	0.2
2SC6040	800	410	1	**MSTM**	50	5	1	60	5	0.1	1.0	0.8	0.1	0.5	4.0	0.2
2SC6142	800	375	1.5	**PW-Mold**	80	5	1	100	5	0.1	1.0	0.8	0.1	0.2 (typ.)	3.5 (typ.)	0.15 (typ.)
TTC012	800	375	2	**PW-Mold**	80	5	1	100	5	0.3	1.0	0.5	0.0625	0.1 (typ.)	4.4 (typ.)	0.15 (typ.)

Part number **in red** signifies a new product.

Low $V_{CE(sat)}$ Series

■ Features

- Ultra-high-speed switching
- New package development

Super Hi-Met design

Low breakdown voltage Hi-Met III

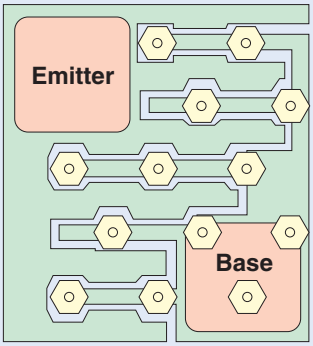

- Fine pattern
- Multi-layer wiring
- Ultra high speed

Super Hi-Met

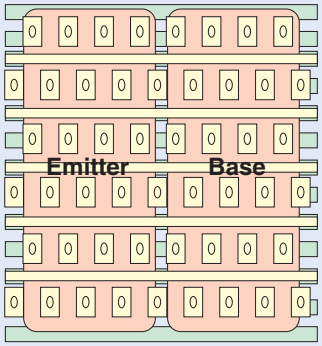

■ Switching Time Comparison

Ultra-high-speed product

Super Hi-Met

2SC5906
(30 V/4 A/TSM)

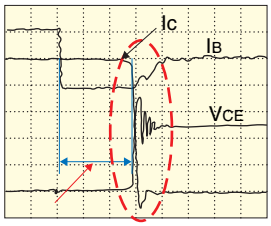

tstg = 280 ns 100 ns/div

Enlarged view

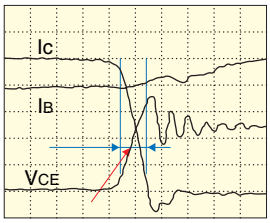

tf = 28 ns 25 ns/div

Previous product

Low breakdown voltage Hi-Met III

I_B: 50 mA/div
I_C: 320 mA/div
V_{CE}: 5 V/div

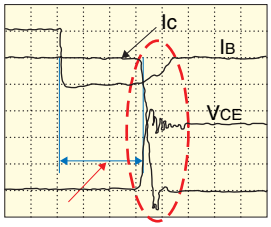

tstg = 310 ns 100 ns/div

Enlarged view

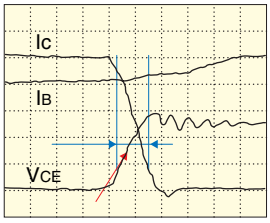

tf = 35 ns 25 ns/div

■ New Package PS-8

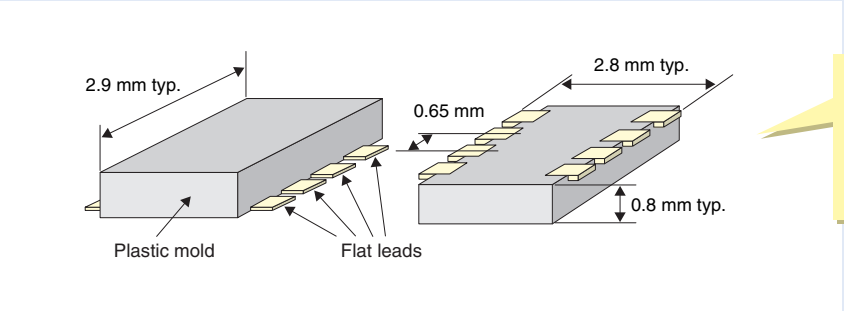

Small thin package with equivalent in power dissipation of the PW-Mini package (1 W)

Unit: mm

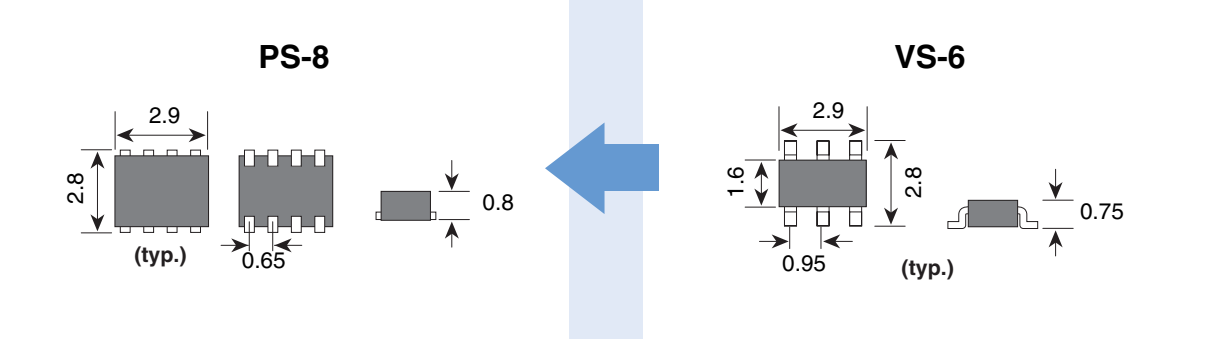

Ultra-High-Speed Switching Series

Part Number	Absolute Maximum Ratings			hFE			VCE(sat) Max			Package	Remarks
	VCEO (V)	IC (A)	PC (W)		VCE (V)	IC (A)	(V)	IC (A)	IB (mA)		
2SC6125	20	4	1.0	180 to 390	2	0.5	0.2	1.6	53	PW-Mini	
2SC6052	20	5	10	180 to 390	2	0.5	0.2	1.6	53	PW-Mold	
2SC5976	30	3	0.625	250 to 400	2	0.3	0.14	1.0	33	TSM	
2SC5906	30	4	0.8	200 to 500	2	0.5	0.2	1.6	53	TSM	
2SC6062	30	5	0.8	250 to 400	2	0.5	0.12	1.6	53	TSM	
2SC6033	50	2.5	0.625	250 to 400	2	0.3	0.18	1.0	33	TSM	
2SC6126	50	3	1.0	250 to 400	2	0.3	0.18	1.0	33	PW-Mini	
2SC6000	50	7	20	250 to 400	2	2.5	0.18	2.5	83	PW-Mold	
TPCP8511	50	3	1.25	250 to 400	2	0.3	0.18	1.0	33	PS-8	
TPC6D02	–15	–1	0.6	250 to 400	–2	–0.15	–0.17	–0.5	–16.7	VS-6	Incorporating SBD
TPCP8H01	50	5	1.0	250 to 400	2	0.5	0.13	1.6	53	PS-8	Incorporating S-MOS
TPCP8H02	30	3	1.0	250 to 400	2	0.3	0.14	1.0	33	PS-8	Incorporating S-MOS

Part number **in red** signifies a new product.

Transistors for MOS Gate Drivers / Compact Motor Drivers

Low $V_{CE(sat)}$ PNP and NPN transistors are housed in a single package. This is ideal for use in high-power IGBTs and high-speed gate drives for MOS gate devices such as MOSFETs or compact motor drivers.

Example Application Circuits

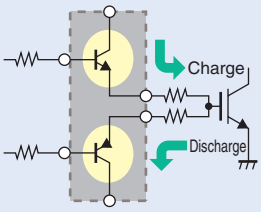

MOS gate driver

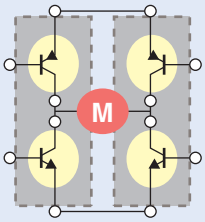

H-bridge motor driver

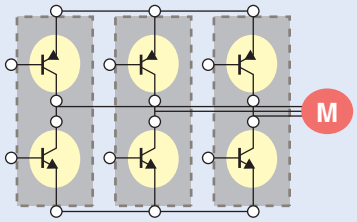

3-phase motor driver

■ Product Lineup

Part Number	Package	Polarity	Absolute Maximum Ratings				hFE				VCE(sat) Max		
			VCEO (V)	IC (A)	ICP (A)	PC *1 (mW)	Min	Max	VCE (V)	IC (A)	(V)	IC (A)	IB (mA)
HN4B101J	SMV	PNP	–30	–1.0	–5	550	200	500	–2	–0.12	–0.2	–0.4	–13
		NPN	30	1.2	5	550	200	500	2	0.12	0.17	0.4	13
HN4B102J		PNP	–30	–1.8	–8	750	200	500	–2	–0.2	–0.2	–0.6	–20
		NPN	30	2	8	750	200	500	2	0.2	0.14	0.6	20
TPC6901A	VS-6	PNP	–50	–0.7	–5	400	200	500	–2	–0.1	–0.23	–0.3	–10
		NPN	50	1	5	400	400	1000	2	0.1	0.17	0.3	6
TPC6902		PNP	–30	–1.7	–8	700	200	500	–2	–0.2	–0.2	–0.6	–20
		NPN	30	2	8	700	200	500	2	0.2	0.14	0.6	20
TPCP8901	PS-8	PNP	–50	–0.8	–5	830	200	500	–2	–0.1	–0.2	–0.3	–10
		NPN	50	1	5	830	400	1000	2	0.1	0.17	0.3	6
TPCP8902		PNP	–30	–2	–8	890	200	500	–2	–0.2	–0.2	–0.6	–20
		NPN	30	2	8	890	200	500	2	0.2	0.14	0.6	20

*1: The rating applies when the transistor is mounted on an FR4 board (Cu area = 645 mm², glass-epoxy, t = 1.6 mm) and is in single-device operation. Cu thickness: 35 μm for TPC6901A; 70 μm for the other parts.

Circuit Configuration (Top View)

SMV

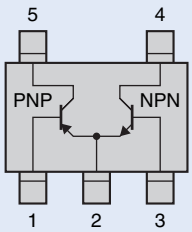

VS-6

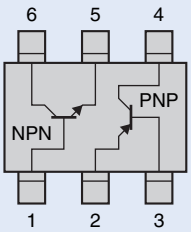

PS-8

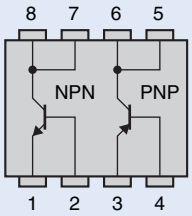

Recommended Transistors for Various Application Circuits

Inverter Circuits for LCD Backlighting

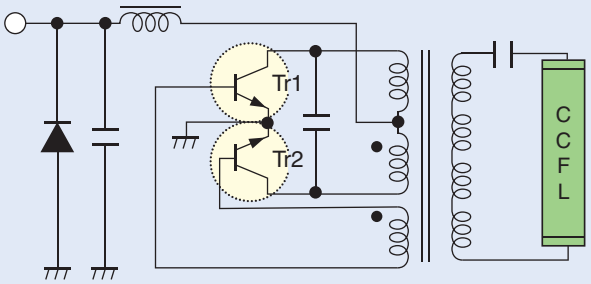

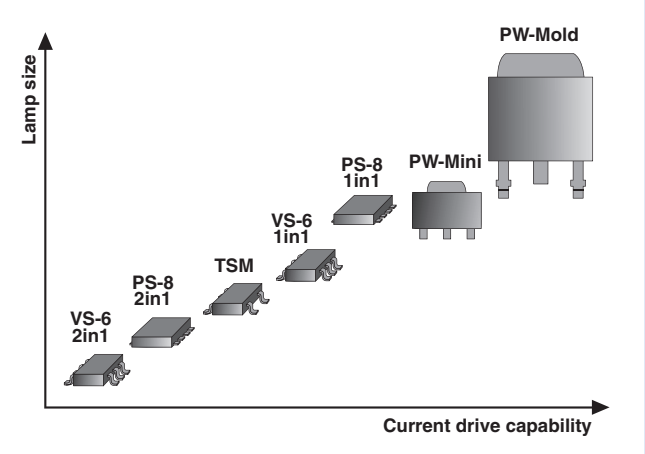

Package	Recommended Products
TSM	**2SC5692, *2SC6033, 2SC5703**
VS-6	**TPC6502, TPC6701**
PW-Mini	**2SC5810, 2SC5712, *2SC6126, *2SC6125**
PS-8	**TPCP8501, TPCP8505, TPCP8507, TPCP8701**
PW-Mold	**2SC5886, 2SC5886A, *2SC6000, 2SC6076**

*Ultra-high-speed products

- For small lamps, Toshiba recommends 2-in-1 power transistors housed in VS-6 and PS-8 packages.
- For LCD-TVs, Toshiba recommends power transistors housed in PW-Mold packages.
- Ultra-high-speed products are also available.

Strobe Circuits for DSCs / Cameras

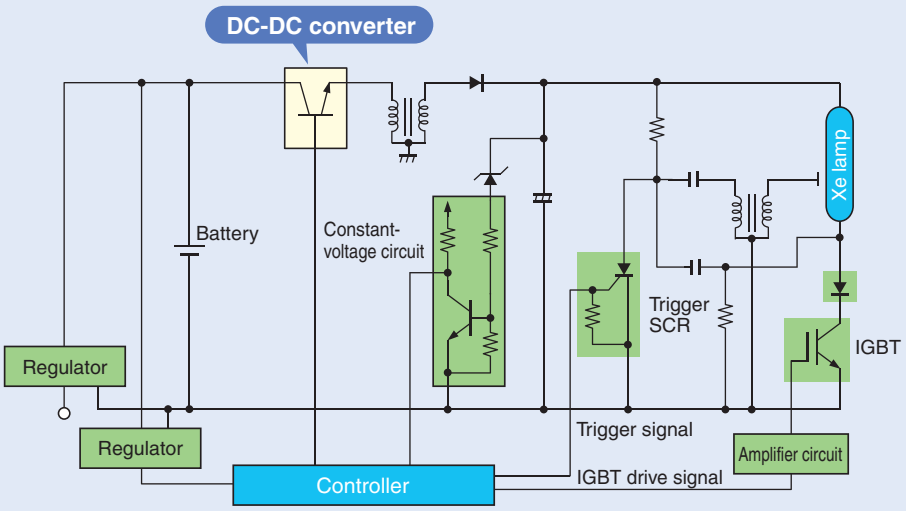

Polarity/Configuration	Package	Recommended Products
NPN/Single	**TSM**	**2SC5738, *2SC5976, *2SC5906, *2SC6033, *2SC6062**
PNP/Single	**TSM**	**2SA2061**
PNP + S-MOS	**PS-8**	***TPCP8H01, *TPCP8H02**

*Ultra-high-speed products

Battery Charge Circuits

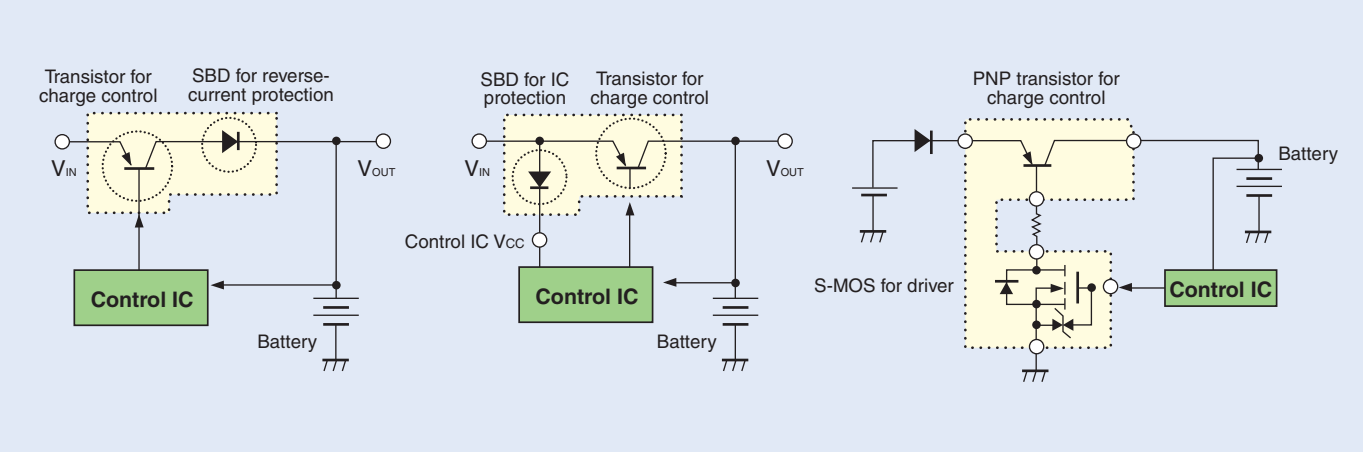

Package	Recommended Products
TSM	**2SA2065, 2SA2061**
VS-6	**TPC6601, TPC6603, TPC6D02, TPC6D03**
PW-Mini	**2SA2069, 2SA2059**
PS-8	**TPCP8F01**

General-Purpose Load Switches

A Low $V_{CE(sat)}$ PNP transistor and an S-MOS to drive it are housed in a single package.
This is ideal for use in power supply switches to loads.

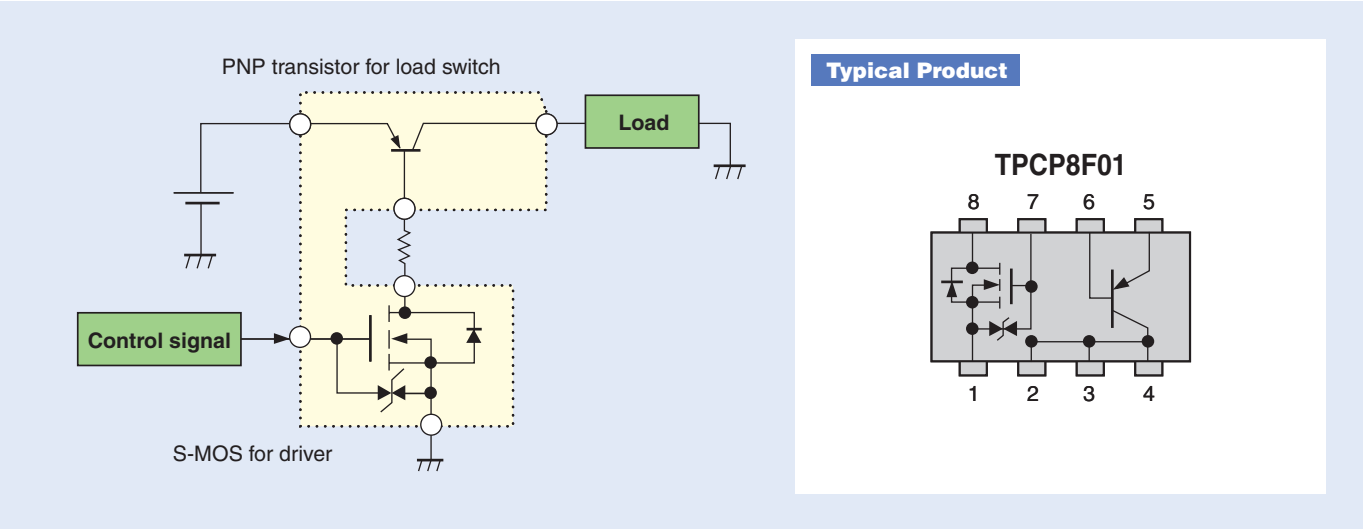

<Features>

- Low power dissipation due to low $V_{CE(sat)}$ PNP transistor
- Using an S-MOS to receive signals allows the transistor can be operated directly from a microcontroller.

Polarity/Configuration	Part Number	Absolute Maximum Ratings			hFE				$V_{CE(sat)}$ Max			Mass Production
		V_{CEO} (V)	I_C (A)	P_C (mW)	Min	Max	V_{CEO} (V)	I_C (A)	(V)	I_C (A)	I_B (mA)	
PNP+S-MOS	**TPCP8F01**	–20	–3	1000	200	500	–2	–0.5	–0.19	–1.6	–53	Available

The rating applies when the transistor is mounted on an FR4 board: Cu area = 645 mm², glass-epoxy, t = 1.6 mm.
Incorporating N-ch S-MOS: V_{DSS} = 20 V, I_D = 0.1 A, R_{ON} = 4 Ω (max)

HDD Dropper Power Supplies

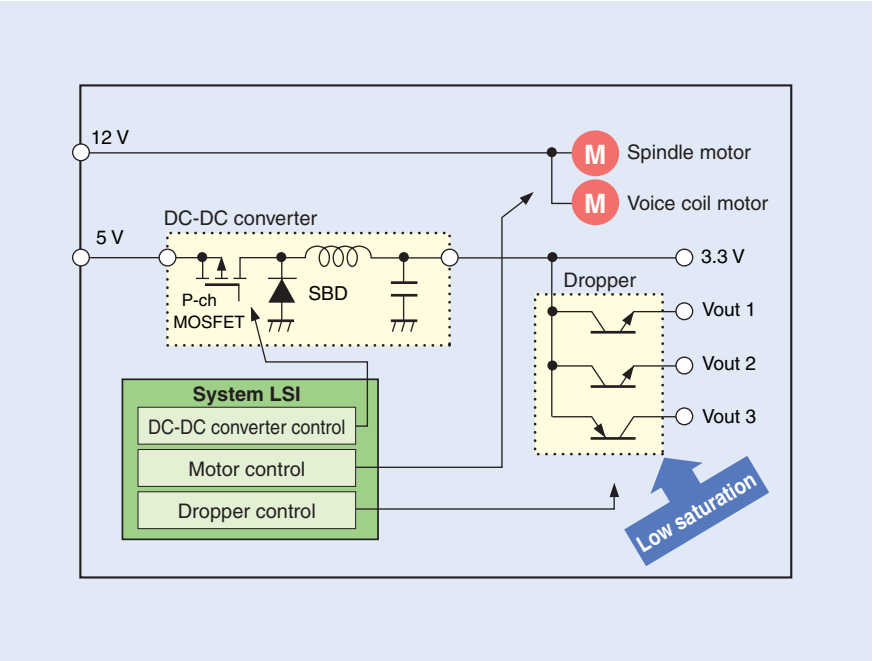

Recommended Products

	V_{CEO} (V)	I_C (A)	2.5 inches or less	3.5 inches
NPN transistors	10	2	**TPC6501**	
	10	2	**2SC5755**	
	10	2	**2SC5785**	
	10	2	**TPCP8504**	
	20	1.5	**2SC5819**	
	20	4	**2SC5714**	**2SC6125**
	20	5		**2SC6052**
	50	1	**2SC5810**	
	50	3		**2SC5712**
	50	3		**2SC6126**
	50	5		**2SC5886**
	100	2	**TPCP8501**	
PNP transistors	–10	–1.5	**TPC6602**	
	–10	–1.5	**2SA2058**	
	–10	–2	**2SA2066**	
	–20	–2.5	**2SA2061**	
	–20	–3	**2SA2059**	
	–20	–5	**TPCP8601**	**2SA1242**
	–50	–1	**2SA2070**	
	–50	–2	**2SA2060**	
	–50	–2.5	**TPCP8602**	
	–50	–5		**2SA2097**

DC-DC Converters for Various Information Devices

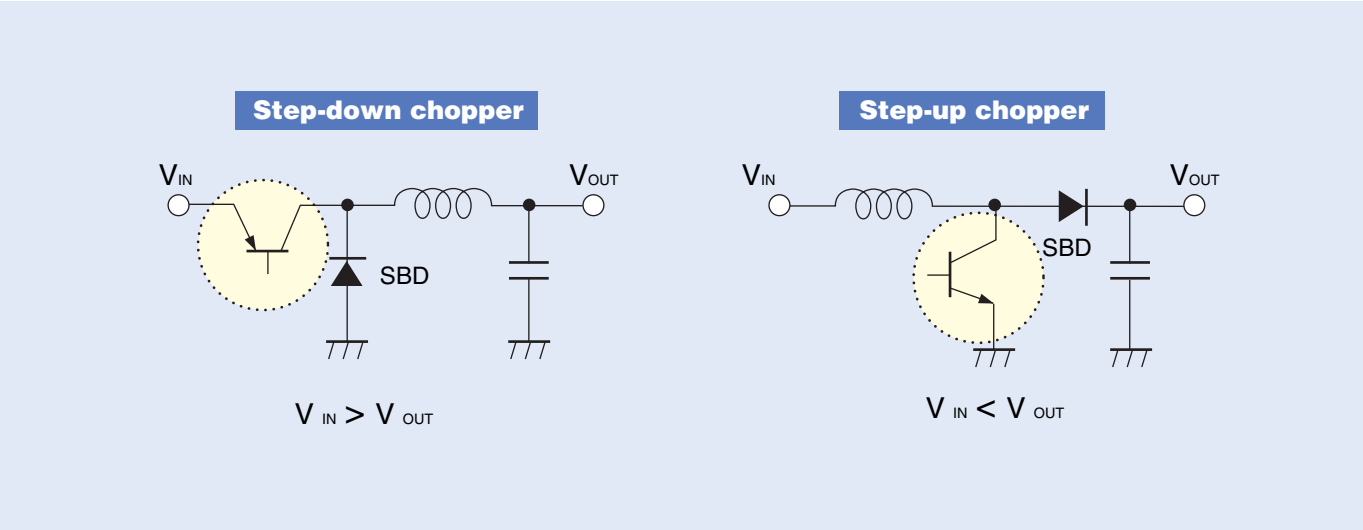

<Features>

- Ultra-high-speed products emphasizing efficiency are ideal for DC-DC converters used in information devices.
- The VS-6 package, which includes an SBD is also available.

Application	Package	Recommended Products
Ultra-High-Speed Transistors	**TSM**	**2SC6033, 2SC5976, 2SC6062**
	VS-6	**TPC6D02**
	PW-Mold	**2SC6000**
	PS-8	**TPCP8511**
Standard Transistors	**TSM**	**2SA2056, 2SC5703**
	PW-Mini	**2SA2059, 2SC5714**

Part number **in red** signifies a new product.

Self-Excited DC-DC Converters for AC Adapters Used in Cell Phones / Amusement Equipment

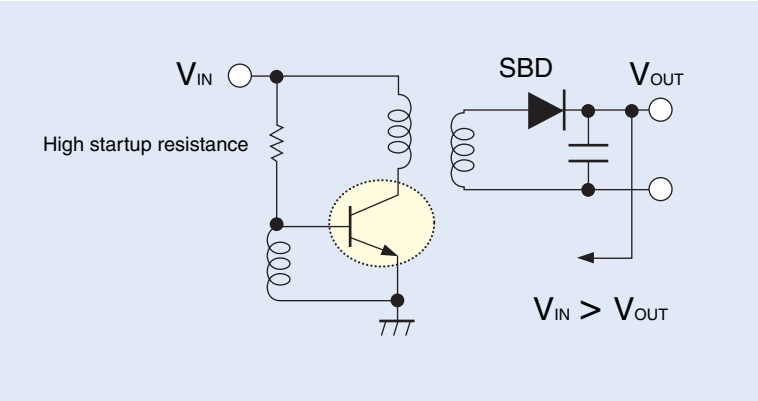

- Recommended to use for consuming standby power [High hFE achievement at low collector current]
- Available in low-profile packages

The MSTM package series is recommended.

Application	Package	Recommended Products	VCBO (V)	VCEO (V)	IC (A)	hFE Min(@VCE = 5 V, IC = 1 mA)
100 V AC	PW-Mold	TTC008	600	285	1.5	80
		2SC5548	600	370	2	50
		2SC5548A	600	400	2	20
		TTC003	600	400	1.5	13
	MSTM	2SC5930	600	285	1	30
		2SC6010	600	285	1	80
		2SC6034	600	285	1	100
200 V AC	MSTM	2SC6042	800	375	1	80
		2SC6040	800	410	1	50
	PW-Mold	2SC6142	800	375	1.5	80
		TTC012	800	375	2	80

Part number in red signifies a new product.

Audios

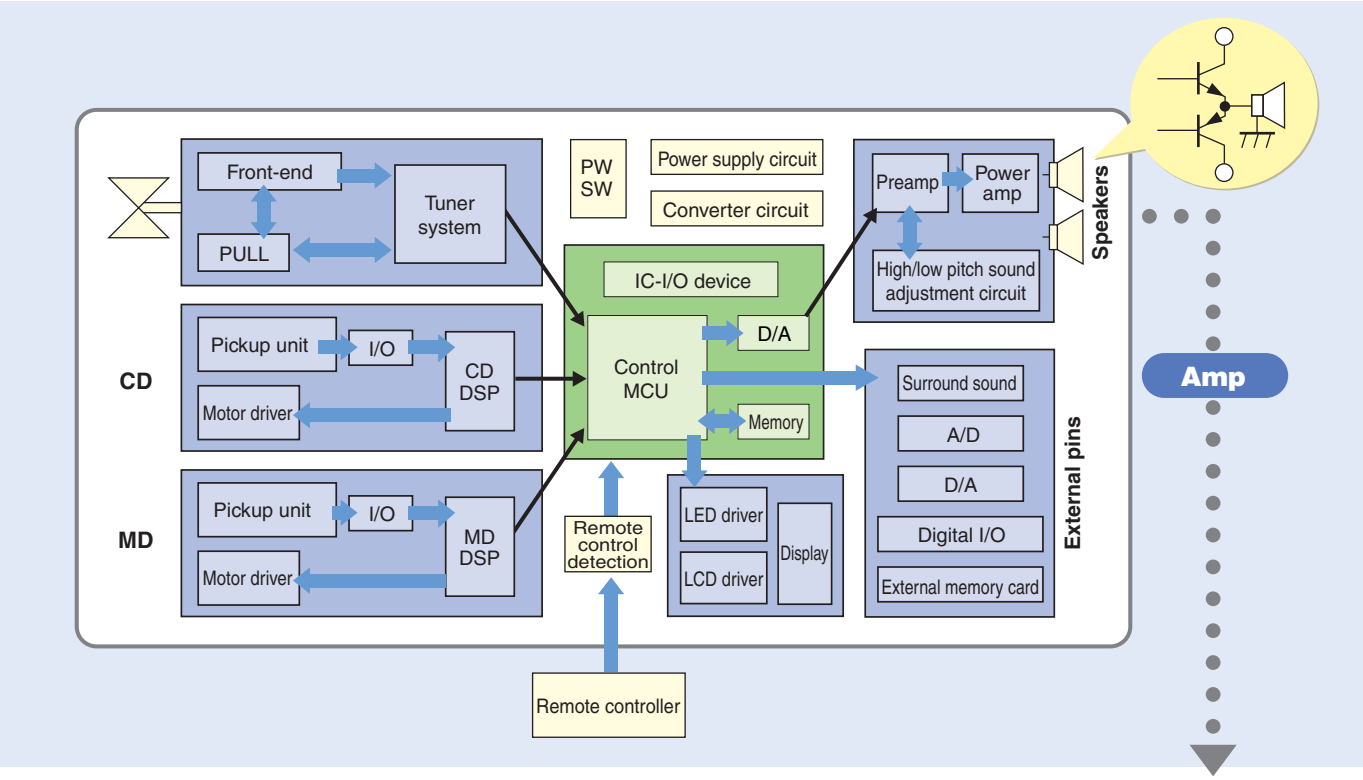

Application	Package	Recommended Products	Remarks
AV receivers	TO-3PN	2SD2636	High-speed darlington
High-power amps	TO-3PN	2SA2120, 2SC5948	Pc = 200 W
	TO-3PL	2SA2121, 2SC5949	Pc = 220 W
	TO-220NIS	2SA1837, 2SC4793	Transistor for driver stage

For High-Voltage Power Supplies

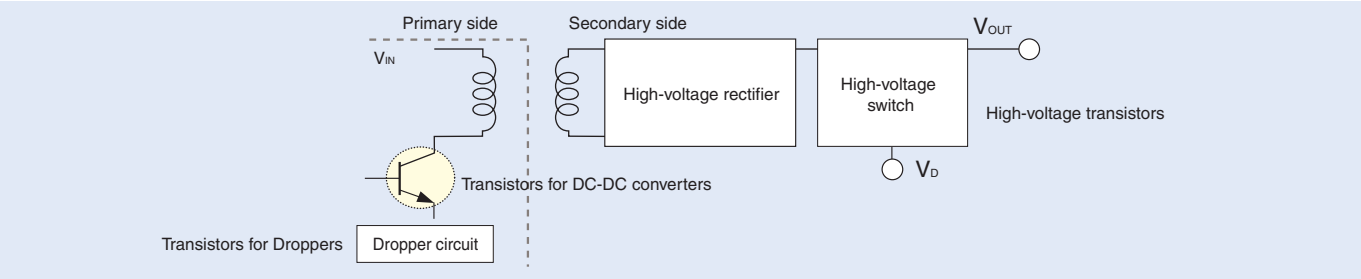

■ Transistors for DC-DC Converters

Toshiba recommends the transistors listed below for use in primary-side switches for power supplies with an input voltage of 24 V. (V_{CEO} = 80 V or higher)

The h_{FE} ratings are guaranteed even in the low current region. Example: h_{FE} = 80 or higher (at V_{CE} = 2 V / I_C = 1mA)

Part Number	Package	Absolute Maximum Ratings				hFE				VCE(sat) Max		
		VCEX (V)	VCEO (V)	IC (A)	PC (W)	Min	Max	VCE (V)	IC (A)	(V)	IC (A)	IB (mA)
2SC6061	TSM	150	120	1	0.625 *1	120	300	2	0.1	0.14	0.3	10
TPCP8510	PS-8	150	120	1	1.1 *1	120	300	2	0.1	0.14	0.3	10
TPCP8507	PS-8	150	120	1	1.25 *1	120	300	2	0.1	0.14	0.3	10
2SC6076	PW-Mold	160	80	3	10 *2	180	450	2	0.5	0.5	1	100
2SC6124	PW-Mini	160	80	2	1 *3	100	200	2	0.5	0.5	1	100
2SC6079	MSTM	160	80	2	1 *3	180	450	2	0.5	0.5	1	100
TTC009	TO-220NIS	160	80	3	15 *2	100	200	2	0.5	0.5	1	100

*1: The rating applies when the transistors are mounted on an FR4 board : Cu area = 645 mm², glass-epoxy, t = 1.6 mm
*2: Tc = 25˚C *3: Ta = 25˚C
Part number **in red** signifies a new product.

■ Transistors for Droppers

Part Number	Package	Absolute Maximum Ratings			hFE				VCE(sat) (V)		
		VCEO (V)	IC (A)	PC (Tc = 25˚C) (W)	Min	Max	VCE (V)	IC (A)	Max	IC (A)	IB (mA)
2SB906	PW-Mold	–60	–3	20	60	200	–5	–0.5	–1.7	–3	–300
TTB001	TFP	–60	–3	30	100	250	–5	–0.5	–1.7	–3	–300
TTB002	PW-Mold	–60	–3	25	100	250	–5	–0.5	–1.7	–3	–300

■ High-Voltage Transistors

Part Number	Package	Absolute Maximum Ratings			Remarks
		VCEO (V)	IC (A)	PC (W)	
2SA1972	LSTM	–400	–0.5	0.9	
2SA1971	PW-Mini	–400	–0.5	1	
TPCP8604	PS-8	–400	–0.3	1	SMD
2SA2184	PW-Mold	–550	–1	1	SMD only
2SA2142	PW-Mold	–600	–0.5	10	SMD only
2SC5122	LSTM	400	0.05	0.9	
2SC5307	PW-Mini	400	0.05	1	
2SC5201	LSTM	600	0.05	0.9	
2SC5460	TO-126	800	0.05	10	
2SC5466	TO-220NIS	800	0.05	10	
2SC4686A	TO-220NIS	1200	0.05	10	
2SC5563	TO-220NIS	1500	0.02	10	

Part number **in red** signifies a new product.

Circuit Configuration

TPCP8604

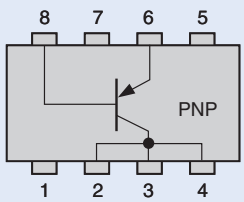

LSTM

(Weight: 0.36 g Typ.)

Part Number		I_C	V_{CEO}	P_C	h_{FE}			$V_{CE(sat)}$ Max			f_T Typ.			Cob Typ.			Remarks
NPN	PNP	(A)	(V)	(W)		V_{CE} (V)	I_C (mA)	(V)	I_C (mA)	I_B (mA)	(MHz)	V_{CE} (V)	I_E (mA)	(pF)	V_{CB} (V)	f (MHz)	
2SC2383	**2SA1013**	1	160	0.9	60 to 320	5	200	1.5	500	50	100/50	5	200	20/35 (max)	10	1	High breakdown voltage
2SC2236	**2SA966**	1.5	30	0.9	100 to 320	2	500	2.0	1500	30	120	2	500	30 (max)	10	1	For audio
–	**2SA1160**	2	10	0.9	140 to 600	1	500	0.5	2000	50	150	1	500	27	10	1	Low saturation voltage
2SC2655	**2SA1020**		50	0.9	70 to 240	2	500	0.5	1000	50	100	2	500	30/40	10	1	
2SC4408	**2SA1680**		50	0.9	120 to 400	2	100	0.5	1000	50	100	2	100	15/23	10	1	
–	**2SA1382**		50	0.9	150 to 400	2	500	0.5	1000	33	110	2	500	50	10	1	
2SC3328	**2SA1315**		80	0.9	70 to 240	2	500	0.5	1000	50	80/100	2	500	30/45 (max)	10	1	High breakdown voltage
2SC4682	**–**	3	15	0.9	800 to 3200	1	500	0.5	3000	30	150	1	500	30	10	1	For strobe
2SC4604	**2SA1761**		50	0.9	120 to 400	2	100	0.5	1500	75	100	2	100	20/32	10	1	Low saturation voltage
2SC2229	**2SA949**	0.05	150	0.8	70 to 240	5	10	0.5/0.8	10	1	120	30	10	3.5 (max)/4	10	1	High breakdown voltage
–	**2SA1145**		150	0.8	80 to 240	5	10	1.0	10	1	200	5	10	2.5	10	1	
2SC5122	**–**		400	0.9	100 to 300	5	20	1.0	20	0.5	–	–	–	4	10	1	
2SC5201	**–**		600	0.9	100 to 300	5	20	1.0	20	0.5	–	–	–	6.5	10	1	
2SC2230	**–**	0.1	160	0.8	120 to 400	10	10	0.5	50	5	(50)	10	10	7 (max)	10	1	
2SC2230A	**–**		180	0.8	120 to 400	10	10	0.5	50	5	(50)	10	10	7 (max)	10	1	
–	**2SA1972**	0.5	400	0.9	140 to 400	5	100	1.0	100	10	35	5	50	18	10	1	
2SC5549	**–**	1	400	0.9	20 to 65	5	40	1.0	200	25	–	–	–	–	–	–	
TTC13003L	**–**	1.5	400	0.9	15 to 30	5	40	1.0	200	25	–	–	–	–	–	–	
–	**2SA817A**	0.4	80	0.8	70 to 240	2	50	0.4	200	20	100	10	10	14	10	1	For audio
2SC2235	**2SA965**	0.8	120	0.9	80 to 240	5	100	1.0	500	50	120	5	100	30/40 (max)	10	1	

Part Number		I_C	V_{CEO}	P_C	h_{FE}			$V_{CE(sat)}$ Max			SW Time Typ.			Remarks
NPN	PNP	(A)	(V)	(W)		V_{CE} (V)	I_C (mA)	(V)	I_C (mA)	I_B (mA)	t_{on} (μs)	t_{stg} (μs)	t_f (μs)	
2SD1140	**–**	1.5	30	0.9	4000 (min)	2	150	1.5	1000	1	0.2	0.6	0.3	Darlington
2SD2088	**–**	2.0	60±10	0.9	2000 (min)	2	1000	1.5	1000	1	0.4	4.0	0.6	
2SD2695	**–**	2.0	60±10	0.9	2000 (min)	2	1000	1.5	1000	1	0.4	4.0	0.6	
2SD2206	**2SB1457**	2.0	100	0.9	2000 (min)	2	1000	1.5	1000	1	0.4	4.0/2.0	0.6/0.4	
2SD2536	**–**	2.0	100±15	0.9	2000 (min)	2	1000	1.5	1000	–	–	–	–	

Part number **in red** signifies a new product.

MSTM

(Weight: 0.2 g Typ.)

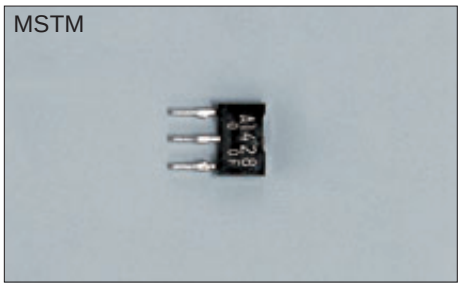

Part Number		I_C	V_{CEO}	P_C	h_{FE}			$V_{CE(sat)}$ Max			f_T Typ.			Cob Typ.			Remarks
NPN	PNP	(A)	(V)	(W)		V_{CE} (V)	I_C (mA)	(V)	I_C (mA)	I_B (mA)	(MHz)	V_{CE} (V)	I_C (mA)	(pF)	V_{CB} (V)	f (MHz)	
–	**2SA1432**	0.1	300	1.0	30 to 150	10	20	0.5	20	2	60	10	20	8 (max)	10	1	High breakdown voltage
2SC3665	**2SA1425**	0.8	120	1.0	80 to 240	5	100	1.0	500	50	120	5	100	30/40 (max)	10	1	For audio
–	**2SA1426**	0.8	30	1.0	100 to 320	1	100	0.7	500	20	120	5	10	19	10	1	Low saturation voltage
2SC5930	–	1.0	285	1.0	40 to 100	5	200	1.0	400	50	–	–	–	–	–	–	High-voltage switching
2SC6010	–	1.0	285	1.0	100 to 200	5	100	1.0	600	75	–	–	–	–	–	–	
2SC6034	–	1.0	285	1.0	125 to 250	5	100	1.0	600	75	–	–	–	–	–	–	
2SC6042	–	1.0	375	1.0	100 to 200	5	100	1.0	800	100	–	–	–	–	–	–	
2SC6040	–	1.0	410	1.0	60 to 120	5	100	1.0	800	100	–	–	–	–	–	–	
2SD1631	–	1.5	30	1.0	4000 (min)	2	150	1.5	1000	1	–	–	–	–	–	–	Darlington
2SC6139	**2SA2219**	1.5	160	1.0	140 to 280	5	100	0.5	500	50	100	10	100	12/17	10	1	For audio
2SC3670	**2SA1430**	2.0	10	1.0	140 to 600	1	500	0.5	2000	50	150/140	1	500	27/50	10	1	Low saturation voltage
2SC3673	–	2.0	40	1.0	500 (min)	1	400	0.5	300	1	220	2	100	20	10	1	High h_{FE}
2SC3668	**2SA1428**	2.0	50	1.0	70 to 240	2	500	0.5	1000	50	100	2	500	30/40	10	1	Low saturation voltage
2SC3669	**2SA1429**	2.0	80	1.0	70 to 240	2	500	0.5	1000	50	100/80	2	500	30/45	10	1	
2SC4683	–	3.0	15	1.0	800 to 3200	1	500	0.5	3000	30	150	1	500	30	10	1	
–	**2SA1926**	3.0	80	1.0	150 to 400	2	500	0.17	1000	50	–	–	–	45	10	1	
2SC3671	**2SA1431**	5.0	20	1.0	100 to 320	2	500	1.0	4000	100	100/170	2	500	40/62	10	1	
2SC6079	–	2.0	80	1.0	180 to 450	2	500	0.5	1000	100	150	2	500	14 (max)	10	1	High-voltage power supplies for primary-side switches

Part number **in red** signifies a new product.

TO-126

(Weight: 0.82 g Typ.)

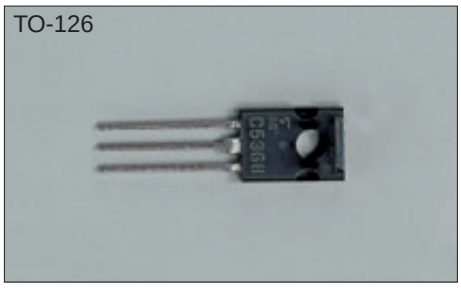

Part Number		I_C	V_{CEO}	P_C	h_{FE}			$V_{CE(sat)}$ Max			f_T Typ.			Remarks
NPN	PNP	(A)	(V)	Tc = 25°C *Ta = 25°C (W)		V_{CE} (V)	I_C (A)	(V)	I_C (A)	I_B (mA)	(MHz)	V_{CE} (V)	I_C (A)	
2SC3423	**2SA1360**	0.05	150	5	80 to 240	5	10 m	1	10 m	1	200	5	10 m	For audio
2SC5460	–		800	10	15 (min)	5	7 m	1.0	20 m	4	–	–	–	Dynamic focus
TTC011	–	1	230	10	100 to 320	5	0.2	1.0	0.3	30	–	–	–	LCD backlighting
TTC004	**TTA004**	1.5	160	10	140 to 280	5	0.1	0.5	0.5	50	100	10	0.1	For audio
2SC3422	–	3	40	10	80 to 240	2	0.5	0.8	2	200	100	2	0.5	General-purpose
2SD1509	**2SB1067**	2	80	10	2000 (min)	2	1	1.5	1	1	100/50	2	0.5	Darlington

Part number **in red** signifies a new product.

TO-220 Series

TO-220NIS [isolation package]
(Weight: 1.7 g Typ.)

TO-220NIS

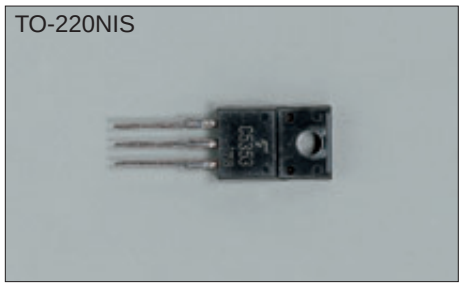

Part Number NPN	Part Number PNP	I_C (A)	V_{CEO} (V)	P_C Tc = 25°C (W)	h_{FE}	V_{CE} (V)	I_C (A)	$V_{CE(sat)}$ Max (V)	I_C (A)	I_B (A)	f_T Typ. (MHz)	V_{CE} (V)	I_C (A)	SW Time Typ. t_{on} (μs)	t_{stg} (μs)	t_f (μs)	Remarks
2SC5466	–	0.05	800	10	15 (min)	5	7 m	1.0	20 m	4 m	5.5	10	3 m	–	–	–	Dynamic focus
2SC4686	–		1000	10	15 to 60	5	3 m	1.5	0.01	2 m	5.5	10	3 m	–	–	–	
2SC4686A	–		1200	10	15 to 60	5	3 m	1.5	0.01	2 m	5.5	10	3 m	–	–	–	
2SC4544	–	0.1	300	8	30 to 200	10	0.02	1.0	0.01	1 m	70	10	0.02	–	–	–	Chroma output
2SC4793	2SA1837	1	230	20	100 to 320	5	0.1	1.5	0.5	50 m	100	10	0.1	–	–	–	For audio
2SC2073A	–	1.5	150	25	40 to 140	10	0.5	1.5	0.5	50 m	4	10	0.5	–	–	–	Veritical-deflectin output
2SD2352	–	2	60	25	800 to 3200	5	0.1	1.0	0.5	5 m	17	5	0.5	–	–	–	General-purpose
2SC5171	–		180	20	100 to 320	5	0.1	1.0	1	0.1	200	5	0.3	–	–	–	For audio
2SC4935	2SA1869	3	50	10	70 to 240	2	0.5	0.6	2	0.2	80/100	2	0.5	–	–	–	General-purpose
2SD2012	2SB1375		60	25	100 to 320	5	0.5	1.0/1.5	2	0.2	3	5	0.5	–	–	–	
TTC009	–		80	15	100 to 200	2	0.5	0.3	0.5	50 m	150	2	0.5	0.05	0.4	0.15	
2SD2092	–	3	100	25	500 to 1500	1	0.5	0.3	1	0.01	140	5	0.5	0.5	5.0	0.7	Low saturation voltage (For DC-DC converters)
2SC4881	2SA1931	5	50	20	100 to 320	1	1	0.4	2.5	0.125	100	4	1	0.1	0.8	0.1	
2SC3710A	2SA1452A	12	80	30	70 to 240	1	1	0.4	6	0.3	80/50	5	1	0.2/0.3	1.0	0.2/0.5	

Part Number NPN	Part Number PNP	I_C (A)	V_{CEO} (V)	P_C Tc = 25°C (W)	h_{FE}	V_{CE} (V)	I_C (A)	$V_{CE(sat)}$ Max (V)	I_C (A)	I_B (A)	SW Time Typ. t_{on} (μs)	t_{stg} (μs)	t_f (μs)	Remarks
2SC5459	–	3	400	25	20 (min)	5	0.3	1.0	1.2	0.15	▲*0.5	*2.0	*0.3	High breakdown voltage, Switching application
2SC5353	–	3	800	25	15 (min)	5	0.15	1	1.2	0.24	▲*0.7	*4.0	*0.5	
2SC5172	–	5	400	25	20 to 65	5	0.5	1	2	0.25	▲*0.5	*2.0	*0.3	
2SD2257	2SB1495	3	100	20/25	2000 (min)	2	1	1.5	1.5	1.5 m	0.5	2.0/1.0	0.5/0.4	Darlington
2SD2129	–		100	20	2000 to 15000	3	1.5	2.0	3	12 m	1.0	5.0	2.0	
2SD2204	–	4	65±10	25	2000 to 15000	3	1.5	2.0	3	12 m	1.0	5.0	20	
2SD2241	2SB1481		100	25	2000 (min)	2	1.5	1.5	3	6 m	0.2/0.15	1.5/0.8	0.6/0.4	
2SD2131	–	5	60±10	30	2000 to 15000	3	3	1.5	3	6 m	1.0	4.0	2.5	
2SD2079	–		100	30	2000 to 15000	3	3	1.5	3	6 m	1.0	4.0	2.5	
2SD2604	–		110±15	20	2000 to 15000	3	2	1.5	2	4 m	0.5	5.0	0.7	
2SD1415A	2SB1020A	7	100	25/30	2000 to 15000	3	3	1.5	3	6 m	0.3/0.8	5.1/2	0.6/2.5	

Part number in red signifies a new product.

▲ : tr. * : Max

TO-3P Series

TO-3P(N)

(Weight: 4.7 g Typ.)

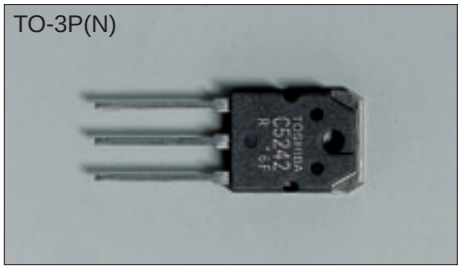

Part Number		I_C	V_{CEO}	P_C	h_{FE}			$V_{CE(sat)}$ Max			f_T Typ.			SW Time Typ.			Remarks
NPN	PNP	(A)	(V)	Tc = 25°C (W)		V_{CE} (V)	I_C (A)	(V)	I_C (A)	I_B (A)	(MHz)	V_{CE} (V)	I_C (A)	t_{on} (μs)	t_{stg} (μs)	t_f (μs)	
2SC5196	–	6	80	60	55 to 160	5	1	2	5	0.5	30	5	1	–	–	–	Power Amplifier
2SC5197	–	8	120	80	55 to 160	5	1	2	6	0.6	30	5	1	–	–	–	
2SC5198	**2SA1941**	10	140	100	55 to 160	5	1	2	7	0.7	30	5	1	–	–	–	Audio amp
2SC5242	**2SA1962**	15	230	130	55 to 160	5	1	3	8	0.8	30	5	1	–	–	–	
2SC5358	**2SA1986**		230	150	55 to 160	5	1	3	8	0.8	30	5	1	–	–	–	
TTC0001	**TTA0001**	18	160	150	80 to 160	5	1	2	9	0.9	30	5	1	–	–	–	
2SC5948	**2SA2120**	12	200	200	55 to 160	5	1	2/3	8	0.8	30/25	5	1	–	–	–	
2SD2636	–	8	160	100	5000 to 15000	4	7	3	7	7 m	35	10	1	0.7	3.5	0.6	Darlington
2SC5354	–	5	800	100	15 (min)	5	0.5	1	2	0.4	–	–	–	▲*0.7	*4.0	*0.5	High breakdown voltage, Switching application
2SC5352	–	10	400	80	20 (min)	5	1	1	4	0.5	–	–	–	▲*0.5	*2.0	*0.3	
2SD1662	–	15	100	100	1000 (min)	3	15	1.5	15	25 m	14	5	1	1	2	1.5	Darlington

Part number **in red** signifies a new product.

▲ : tr. * : Max

TO-3P(N)IS [isolation package]

(Weight: 5.8 g Typ.)

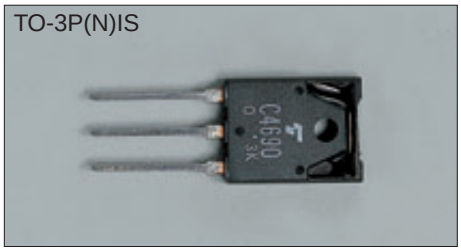

Part Number		I_C	V_{CEO}	P_C	h_{FE}			$V_{CE(sat)}$ Max			f_T Typ.			Remarks
NPN	PNP	(A)	(V)	Tc = 25°C (W)		V_{CE} (V)	I_C (A)	(V)	I_C (A)	I_B (A)	(MHz)	V_{CE} (V)	I_C (A)	
2SC4688	–	6	80	55	55 to 160	5	1	2.0	5.0	0.5	30	5	1	–
2SC4689	–	8	120	70	55 to 160	5	1	2.0	6.0	0.6	30	5	1	
2SC4690	–	10	140	80	55 to 160	5	1	2.0	7.0	0.7	30	5	1	

TO-3P(L)

(Weight: 9.75 g Typ.)

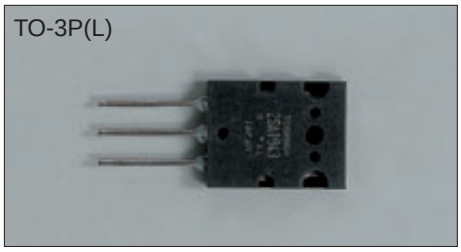

Part Number		I_C	V_{CEO}	P_C	h_{FE}			$V_{CE(sat)}$ Max			f_T Typ.			Remarks
NPN	PNP	(A)	(V)	$T_C = 25°C$ (W)		V_{CE} (V)	I_C (A)	(V)	I_C (A)	I_B (A)	(MHz)	V_{CE} (V)	I_C (A)	
2SC5199	**2SA1942**	12	160	120	55 to 160	5	1	2.5	8	0.8	30	5	1	Audio amp
2SC5200	**2SA1943**	15	230	150	55 to 160	5	1	3.0	8	0.8	30	5	1	
TTC5200	**TTA1943**	15	230	150	80 to 160	5	1	3.0	8	0.8	30	5	1	
TTC0002	**TTA0002**	18	160	180	80 to 160	5	1	2.0	9	0.9	30	5	1	
2SC5359	**2SA1987**	15	230	180	55 to 160	5	1	3.0	8	0.8	30	5	1	
2SC5949	**2SA2121**	15	200	220	55 to 160	5	1	3.0	10	1	30/25	5	1	

Part Number		I_C	V_{CEO}	P_C	h_{FE}			$V_{CE(sat)}$ Max			SW Time Typ.			Remarks
NPN	PNP	(A)	(V)	$T_C = 25°C$ (W)		V_{CE} (V)	I_C (A)	(V)	I_C (A)	I_B (A)	t_{on} (μs)	t_{stg} (μs)	t_f (μs)	
2SC3307	–	10	800	150	10 (min)	5	5	1.0	5	1.0	▲*1.0	*3.0	*1.0	High breakdown voltage, Switching application
2SD1314	–	15	450	150	100 (min)	5	15	2.0	15	0.4	*1.0	*12	*3.0	Darlington
2SD1525	–	30	100	150	1000 (min)	5	20	1.5	20	0.2	1.5	10	1.5	

Part number **in red** signifies a new product.

▲ : tr. * : Max

PW-Mini (SC-62)

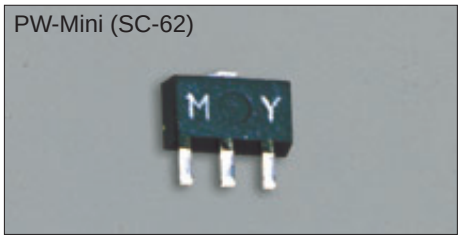

Part Number		P_C	P_C*	P_C**	V_{CEO}	I_C	h_{FE}			$V_{CE(sat)}$ Max			f_T Typ.			Marking		Equivalent to the TO-92		Remarks
								V_{CE}	I_C		I_C	I_B		V_{CE}	I_C					
NPN	PNP	(W)	(W)	(W)	(V)	(A)		(V)	(mA)	(V)	(mA)	(mA)	(MHz)	(V)	(mA)	NPN	PNP	NPN	PNP	
2SC2881	**2SA1201**	0.5	1.0	–	120	0.8	80 to 240	5	100	1.0	500	50	120	5	100	C□	D□	**(2SC2235)**	**(2SA965)**	For audio
2SC2882	**2SA1202**	0.5	1.0	–	80	0.4	70 to 240	2	50	0.4	200	20	100/120	10	10	E□	F□	**(2SC1627)**	**(2SA817)**	Low saturation voltage
–	**2SA1203**	0.5	1.0	–	30	1.5	100 to 320	2	500	2.0	1500	30	120	2	500	G□	H□	**2SC2236**	**2SA966**	For audio
2SC2884	**2SA1204**	0.5	1.0	–	30	0.8	100 to 320	1	100	0.5 /0.7	500	20	120	5	10	P□	R□	**(2SC2120)**	**(2SA950)**	Low saturation voltage
2SC3515	**2SA1384**	0.5	1.0	–	300	0.1	30 to 150	10	20	0.5	20	2	80/70	10	20	I□	J□	**(2SC2551)**	**(2SA1091)**	Low saturation voltage
–	**2SA1483**	0.5	1.0	–	45	0.2	40 to 240	1	10	0.3	100	10	200	10	10	V□	W□	–	–	Low saturation voltage
–	**2SA1971**	0.5	1.0	–	–400	–0.5	140 to 400	–5	–100	–1.0	–100	–10	35	–5	–50	–	AL	–	**2SA1972**	High breakdown voltage
2SC5785	–	–	–	1	10	2	400 to 1000	2	200	0.12	600	12	–	–	–	3E	–	–	–	Low saturation voltage
–	**2SA2066**	–	–	1	–10	–2	200 to 500	–2	–200	–0.19	–600	–20	–	–	–	–	4E	–	–	Low saturation voltage
2SC5713	–	–	–	1	10	4	400 to 1000	2	500	0.15	1600	32	–	–	–	2C	–	–	–	Low saturation voltage
2SC5819	–	–	–	1	20	1.5	400 to 1000	2	150	0.12	500	10	–	–	–	3D	–	–	–	Low saturation voltage
–	**2SA2069**	–	–	1	–20	–1.5	200 to 500	–2	–150	–0.14	–500	–17	–	–	–	–	4D	–	–	Low saturation voltage
2SC5714	–	–	–	1	20	4	400 to 1000	2	500	0.15	1600	32	–	–	–	2E	–	–	–	Low saturation voltage
–	**2SA2059**	–	–	1	–20	–3	200 to 500	–2	–500	–0.19	–1600	–53	–	–	–	–	4F	–	–	Low saturation voltage
2SC5712	–	–	–	1	50	3	400 to 1000	2	300	0.14	1000	20	–	–	–	2A	–	–	–	Low saturation voltage
–	**2SA2060**	–	–	1	–50	–2	200 to 500	–2	–300	–0.20	–1000	–33	–	–	–	–	4G	–	–	Low saturation voltage
2SC5810	–	–	–	1	50	1	400 to 1000	2	100	0.17	300	6	–	–	–	3C	–	–	–	Low saturation voltage
–	**2SA2070**	–	–	1	–50	–1	200 to 500	–2	–100	–0.2	–300	–10	–	–	–	–	4C	–	–	Low saturation voltage
2SD2686	–	–	–	1	60±10	1	2000 (min)	2	1000	1.5	1000	1	–	–	–	3H	–	–	–	Darlington
2SC6126	–	–	–	1	50	3	250 to 400	2	300	0.18	1000	33	–	–	–	4M	–	–	–	High-speed switching
2SC6125	–	–	–	1	20	4	180 to 390	2	500	0.2	1600	53	–	–	–	4L	–	–	–	High-speed switching
2SC6124	**2SA2206**	–	–	1	80	2	100 to 200	2	500	0.5	1000	100	150/100	2	0.5	4J	4K	–	–	Low saturation voltage
TTC005	–	–	–	1.1	285	1	100 to 200	5	100	1.0	600	75	–	–	–	4N	–	–	–	LCD backlighting
TTC013	–	–	–	1	350	0.5	100 to 200	5	50	0.3	160	20	–	–	–	4R	–	–	–	LCD backlighting

Remark: h_{FE} rank symbol listed below enters blank column □ in device marking
(R rank → R, O rank → O, Y rank → Y, A rank → A, B rank → B, C rank → C, D rank → D)
*: The rating applies when the transistor is mounted on a ceramic board (250 mm x 250 mm x 0.8 mm).
**: The rating applies when the transistor is mounted on a glass-epoxy board (645 mm x 645 mm x 1.6 mm).
Part number **in red** signifies a new product.

TFP

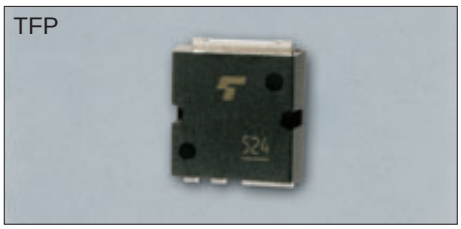

Part Number	V_{CEO}	I_C	P_C	h_{FE}			$V_{CE(sat)}$ Max		
					V_{CE}	I_C		I_C	I_B
	(V)	(A)	(W)		(V)	(A)	(V)	(A)	(A)
TTB001	–60	–3	36	100 to 250	–5	–0.5	–1.7	–3	–0.3

Part number **in red** signifies a new product.

PW-Mold (SC-63/64)

(Weight: 0.36 g Typ.)

Through-hole Package (New PW-Mold2)

Surface-mount Package (New PW-Mold)

(Top) (Bottom)

Part Number		I_C	V_{CEO} *V_{CBO}	P_C $T_C = 25°C$ *$T_a = 25°C$	h_{FE}			$V_{CE(sat)}$ Max			f_T Typ.			Through-hole Package	Surface-mount Package	Remarks
NPN	PNP	(A)	(V)	(W)		V_{CE} (V)	I_C (A)	(V)	I_C (A)	I_B (mA)	(MHz)	V_{CE} (V)	I_C (A)			
2SC6127	–	0.05	800	10	15 (min)	5	0.007	1	0.02	4	15	10	0.003	–	○	High breakdown voltage, Switching application
–	2SA2142	0.5	600	15	100 to 400	5	0.05	1	0.1	10	35	5	0.05	–	○	
2SC5458	–	0.8	400	10	20 to 80	5	0.08	1	0.3	0.04	–	–	–	–	○	
–	2SA2184	1	550	20	80 to 300	5	0.1	0.7	0.3	60	27	5	0.05	–	○	
–	2SA2034	2	400	15	80 to 240	5	0.1	1	0.5	100	–	–	–	–	○	
2SC3405	–	0.8	800	20	10 (min)	5	0.3	0.5	0.3	60	–	–	–	–	○	
2SC5548	–	2	370	15	60 to 120	5	0.2	1	0.8	100	–	–	–	–	○	
TTC008	–	1.5	285	*1.1	100 to 200	5	0.3	1	0.5	62.5	–	–	–	○	–	
2SC6142		1.5	375	*1.1	100 to 200	5	0.1	0.9	0.8	100	–	–	–	○	–	
TTC012	–	2	375	*1.1	100 to 200	5	0.3	0.5	0.5	62.5	–	–	–	○	–	
2SC5548A	–	2	400	15	40 to 100	5	0.2	1	0.8	100	–	–	–	–	○	
TTC003	–	1.5	400	*1.1	20 to 60	5	0.3	1	1.2	0.15	–	–	–	○	–	
2SD1220	2SB905	1.5	150	10	60 to 320	5	0.2	1.5	0.5	50	100/50	5	0.2	–	○	For audio
–	2SA1225		160	15	70 to 240	5	0.1	1.5	0.5	50	100	10	0.1	–	○	
2SD1221	2SB906	3	60	20	60 to 300/200	5	0.5	1/1.7	3	300	3/9	5	0.5	–	○	General-purpose
–	TTB002	3	60	30	100 to 250	5	0.5	1.7	3	300	3	5	0.5	–	○	
2SC3076	2SA1241	2	50	10	70 to 240	2	0.5	0.5	1	50	80/100	2	0.5	–	○	Low saturation voltage
2SC6076	–	3	80	10	180 to 450	2	0.5	0.5	1	100	150	2	0.5	–	○	
–	TTA003	3	80	10	100 to 200	2	0.5	0.5	1	100	100	2	0.5	–	○	
2SC6052	–	5	20	10	180 to 390	2	0.5	0.2	1.6	53	–	–	–	–	○	
2SC3074	2SA1244		50	20	70 to 240	1	1	0.4	3	150	120/60	4	1	–	○	
2SC5886	–		50	20	400 to 1000	2	0.5	0.22	1.6	32	–	–	–	–	○	
–	2SA2097		50	20	200 to 500	2	0.5	0.27	1.6	53	–	–	–	–	○	
2SC5886A	–		50	20	400 to 1000	2	0.5	0.22	1.6	32	–	–	–	–	○	
■S3H32	–		50	20	200 to 500	2	0.5	0.2	1.6	53	–	–	–	–	○	
2SC3303	–		80	20	70 to 240	1	1	0.4	3	150	120	4	1	–	○	
2SC6000	–	7	50	20	250 to 400	2	2.5	0.18	2.5	83	–	–	–	–	○	
2SC3072	–	5	20	10	140 to 450	2	0.5	1	4	100	100	2	0.5	–	○	For strobe
–	2SA1242		20	10	100 to 320	2	0.5	1	4	100	170	2	0.5	–	○	
–	2SB907	3	40	15	2000 (min)	2	1	1.5	2	4	–	–	–	–	○	Darlington
2SD1223	2SB908	4	80	15	2000 (min)	2	1	1.5	3	6	–	–	–	–	○	

Part number **in red** signifies a new product.
■ : Being planned (indicating prototype part number)

TSM

(Weight: 0.01 g Typ.)

Part Number	V_{CEO} (V)	I_C (A)	I_{CP} (A)	h_{FE}	V_{CE} (V)	I_C (A)	$V_{CE(sat)}$ Max (V)	I_C (A)	I_B (mA)	Marking
2SC5755	10	2	3.5	400 to 1000	2	0.2	0.12	0.6	12	WL
2SA2058	–10	–1.5	–2.5	200 to 500	–2	–0.2	–0.19	–0.6	–20	WM
2SC5784	20	1.5	2.5	400 to 1000	2	0.15	0.12	0.5	10	WJ
2SA2065	–20	–1.5	–2.5	200 to 500	–2	–0.15	–0.14	–0.5	–17	WK
2SC5738	20	3.5	6	400 to 1000	2	0.5	0.15	1.6	32	WD
2SA2061	–20	–2.5	–4	200 to 500	–2	–0.5	–0.19	–1.6	–53	WE
TTC007	50	1	2	400 to 1000	2	0.1	0.12	0.3	6	WG
TTA007	–50	–1	–2	200 to 500	–2	–0.1	–0.2	–0.3	–10	WH
2SC5976	30	3	5	250 to 400	2	0.3	0.14	1	33	WW
2SC5906	30	4	7	200 to 500	2	0.5	0.2	1.6	53	WP
2SC5692	50	2.5	4	400 to 1000	2	0.3	0.14	1	20	WB
2SC6033	50	2.5	5	250 to 400	2	0.3	0.18	1	33	WX
2SA2056	–50	–2	–3.5	200 to 500	–2	–0.3	–0.2	–1	–33	WF
2SC5703	50	4	7	400 to 1000	2	0.5	0.12	1.6	32	WA
2SC6062	30	5	10	250 to 400	2	0.5	0.12	1.6	53	WR
2SC6061	120	1	2	120 to 300	2	0.1	0.14	0.3	10	WN
2SD2719	60 ± 10	0.8	3	2000 to 15000	2	1	1.5	1	1	WV

Part number **in red** signifies a new product.

SMV

(Weight: 0.014 g Typ.)

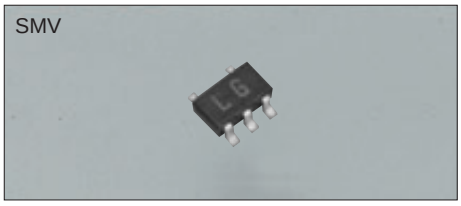

Part Number	Configuration	V_{CEO} (V)	I_C (A)	I_{CP} (A)	h_{FE}	V_{CE} (V)	I_C (A)	$V_{CE(sat)}$ Max (V)	I_C (A)	I_B (mA)
HN4B101J	NPN+PNP	30/–30	1.2/–1	5/–5	200 to 500	2/–2	0.12/–0.12	0.17/–0.2	0.4/–0.4	13/–13
HN4B102J	NPN+PNP	30/–30	2/–1.8	8/–8	200 to 500	2/–2	0.2/–0.2	0.14/–0.2	0.6/–0.6	20/–20

VS-6

(Weight: 0.011 g Typ.)

Part Number	Polarity/Configuration	V_{CEO} (V)	I_C (A)	I_{CP} (A)	h_{FE}	V_{CE} (V)	I_C (A)	$V_{CE(sat)}$ Max (V)	I_C (A)	I_B (mA)	Marking
TPC6501	NPN/Single	10	2	3.5	400 to 1000	2	0.2	0.12	0.6	12	H2A
TPC6502	NPN/Single	50	3	5	400 to 1000	2	0.3	0.14	1	20	H2B
TPC6503	NPN/Single	20	1.5	2.5	400 to 1000	2	0.15	0.12	0.5	10	H2C
■S3F61	NPN/Single	10	4	6	400 to 1000	2	0.5	0.15	1.6	32	–
■S3F62	NPN/Single	20	4	6	400 to 1000	2	0.5	0.15	1.6	32	–
TPC6504	NPN/Single	50	1	2	400 to 1000	2	0.1	0.17	0.3	6	H2D
TPC6601	PNP/Single	–50	–2	–3.5	200 to 500	–2	–0.3	–0.2	–1	–33	H3A
TPC6602	PNP/Single	–10	–2	–3.5	200 to 500	–2	–0.2	–0.19	–0.6	–20	H3B
TPC6603	PNP/Single	–20	–3	–5	200 to 500	–2	–0.5	–0.19	–1.6	–53	H3E
■S3F56	PNP/Single	–20	–1.5	–2.5	200 to 500	–2	–0.15	–0.14	–0.5	–17	–
TPC6604	PNP/Single	–50	–1	–2	200 to 500	–2	–0.1	–0.23	–0.3	–10	H3D
TPC6701	NPN/Dual	50	1	2	400 to 1000	2	0.1	0.17	0.3	6	H4A
TPC6901A	NPN + PNP	50/–50	1/–0.7	5/–5	400 to 1000/200 to 500	2/–2	0.1/–0.1	0.17/–0.23	0.3/–0.3	6/–10	H6B
TPC6902	NPN + PNP	30/–30	2/–1.7	8/–8	200 to 500	2/–2	0.2/–0.2	0.14/–0.2	0.6/–0.6	20/–20	H6C

Part Number	Polarity/ Configuration	Transistor V_{CE} (V)	Transistor I_C (A)	Transistor I_{CP} (A)	Diode V_{RRM} (V)	Diode I_O (A)	Transistor h_{FE}	Transistor V_{CE} (V)	Transistor I_C (A)	Transistor $V_{CE(sat)}$ Max (V)	Transistor I_C (A)	Transistor I_B (mA)	Diode V_F Max (V)	Diode I_F (A)	Diode I_R Max (μA)	Diode V_R (V)	Marking
TPC6D02	PNP + Di	–15	–1	–3	30	0.7	250 to 400	–2	–0.15	–0.17	–0.5	–16.7	0.5	0.7	100	10	H8B
TPC6D03	PNP + Di	–20	–1.2	–2	30	0.7	140 to 350	–2	–0.15	–0.17	–0.5	–16.7	0.43	0.7	100	10	H8C

Part number **in red** signifies a new product. ■ : Being planned (indicating prototype part number)

PS-8

(Weight: 0.0173 g Typ.)

Part Number	Polarity/Configuration	V_{CEO} (V)	I_C (A)	P_C *1 (W)	h_{FE}	V_{CE} (V)	I_C (A)	$V_{CE(sat)}$ Max (V)	I_C (A)	I_B (mA)
■TPCP8508	NPN/Single	375	1	1.5	100 to 200	5	0.1	1.0	0.8	100
TPCP8507	NPN/Single	120	1	1.25	120 to 300	2	0.1	0.14	0.3	10
TPCP8510	NPN/Single	120	1	1.1	120 to 300	2	0.1	0.14	0.3	10
TPCP8501	NPN/Single	100	2	1.3	100 to 300	2	0.3	0.2	1	33
TPCP8505	NPN/Single	50	3	1.25	400 to 1000	2	0.3	0.14	1	20
TPCP8511	NPN/Single	50	3	1.25	250 to 400	2	0.3	0.18	1	33
TPCP8504	NPN/Single	10	2	1.2	400 to 1000	2	0.2	0.12	0.6	12
TPCP8604	PNP/Single	–400	–0.3	1.1	140 to 450	–5	–0.02	–1.0	–0.1	–10
TPCP8603	PNP/Single	–120	–1	1.25	120 to 300	–2	–0.1	–0.2	–0.3	–10
TPCP8602	PNP/Single	–50	–2.5	1.25	200 to 500	–2	–0.3	–0.2	–1	–33
TPCP8601	PNP/Single	–20	–4	1.3	200 to 500	–2	–0.6	–0.19	–2	–67
TPCP8701	NPN/Dual	50	3	0.94	400 to 1000	2	0.3	0.14	1	20
■TPCP8801	PNP/Dual	–30	–1.2	0.83	200 to 500	–2	–0.15	–0.3	–0.36	–12
TPCP8901	NPN+PNP	50/–50	1/–0.8	0.83	400 to 1000/200 to 500	2/–2	0.1/–0.1	0.17/–0.2	0.3/–0.3	6/–10
TPCP8902	NPN+PNP *2	30/–30	2/–2	0.89	200 to 500	2/–2	0.2/–0.2	0.14/–0.2	0.6/–0.6	20/–20
TPCP8F01	PNP+S-MOS *4	–20	–3	1	200 to 500	–2	–0.5	–0.19	–1.6	–53
TPCP8G01	PNP+Pch *2	–20	–3	0.94	200 to 500	–2	–0.5	–0.19	–1.6	–53
TPCP8H01	NPN+S-MOS *2	50	5	1	250 to 400	2	0.5	0.13	1.6	53
TPCP8H02	NPN+S-MOS *3	30	3	1	250 to 400	2	0.3	0.14	1	33
TPCP8L01	NPN darlington + HED	120	0.9	0.9	2000 to 9000	2	1	1.5	1	1

Part number **in red** signifies a new product. ■ : Being planned (indicating prototype part number)
*1: The rating applies when the transistor is mounted on an FR4 board (Cu area: 645 mm², glass-epoxy, t = 1.6 mm).
*2: N-ch S-MOS, V_{DSS} = 20 V, I_D = 0.1A, R_{on} = 3 Ω Max
*3: Incorporating HED V_{RRM} = 200 V, $I_{F(AV)}$ = 1 A
*4: P-ch MOS V_{DSS} = –20 V, I_D = –2 A, R_{on} = 130 mΩ Max

Standard Tape Packing for Automated Pick-and-Place Assembly

Tape Appearance	Tape Type Suffix	Packing Type	Packing Quantity
TSM	TE85L	Embossed Type	3000 pcs/reel
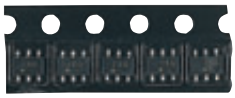 VS-6	TE85L	Embossed Type	3000 pcs/reel
PS-8	TE85L	Embossed Type	3000 pcs/reel
PW-Mini(SOT-89)	TE12L	Embossed Type	1000 pcs/reel
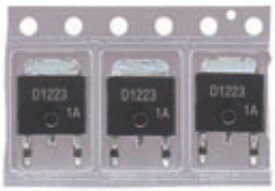 New-PW-Mold	TE16L1, N	Embossed Type	2000 pcs/reel

Tape Appearance	Tape Type Suffix	Packing Type	Packing Quantity
LSTM	TPE6	Ammo pack Type	2000 pcs/carton
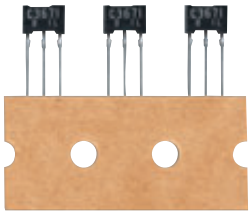 MSTM	TPF2	Ammo pack Type	2000 pcs/carton
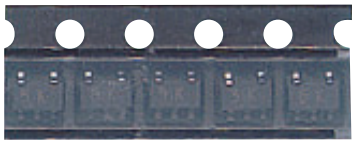 SMV	TE85L	Embossed Type	3000 pcs/reel

TO-220NIS

2-10R101A

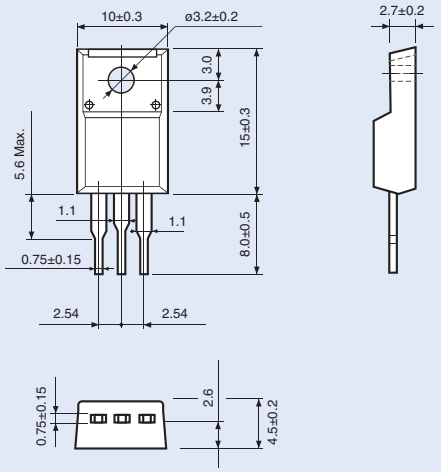

2-10R103A

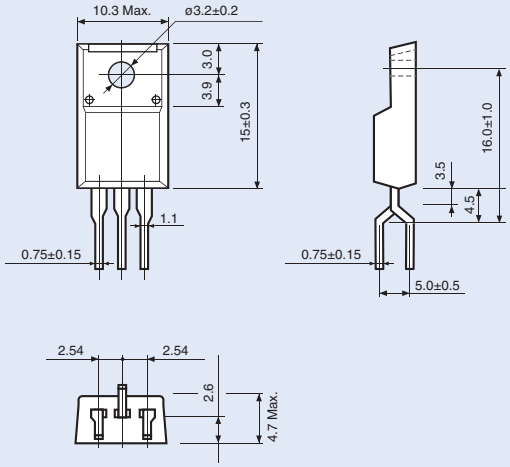

2-10R104A

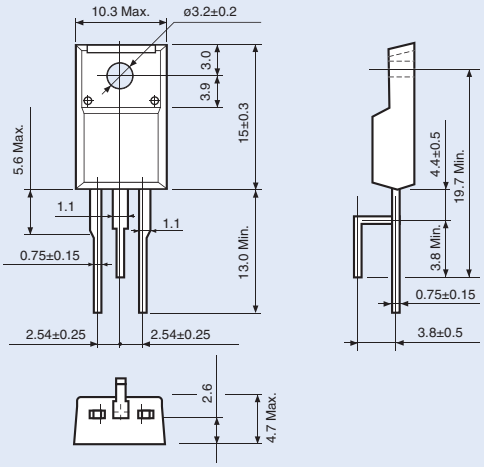

2-10R107A

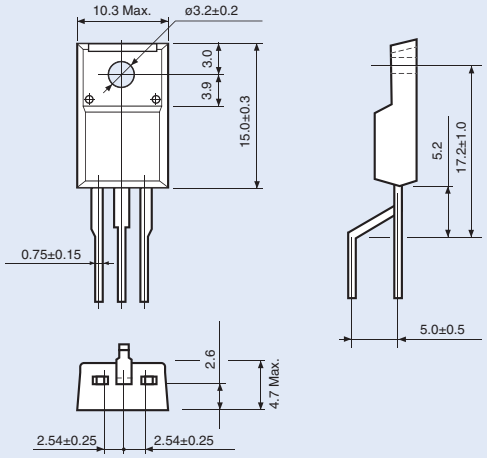

2-10R180A

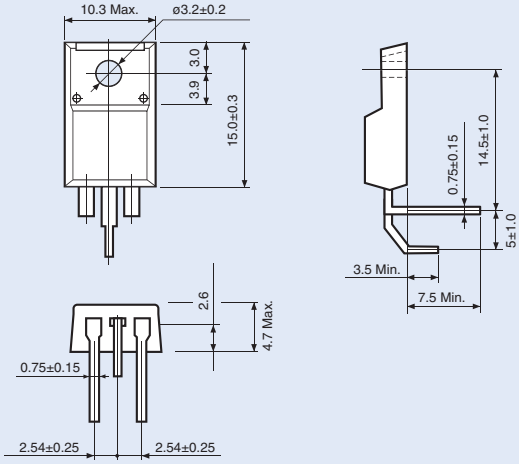

2-10R181A

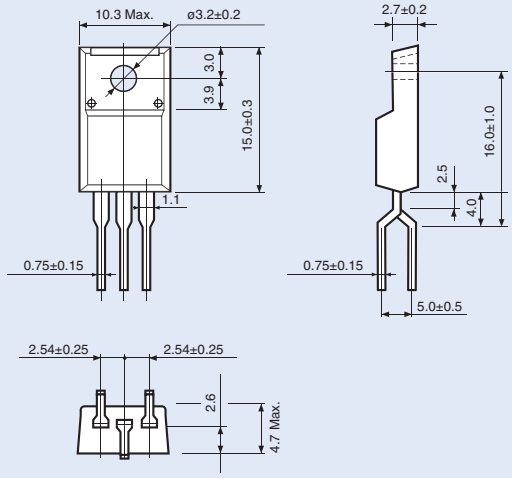

PW-Mini

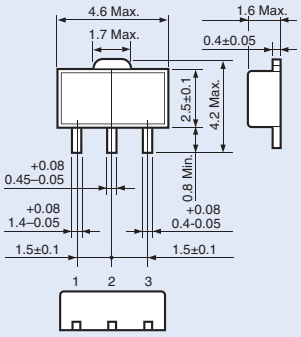

1. Base
2. Collector (heatsink)
3. Emitter

TSM

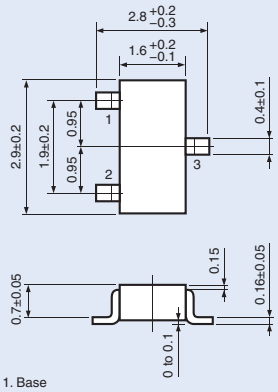

1. Base
2. Emitter
3. Collector

SMV

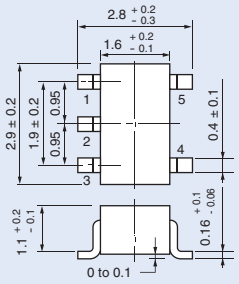

1. Tr1 Base
2. Emitter (common)
3. Tr2 Base
4. Tr2 Collector
5. Tr1 Collector

LSTM

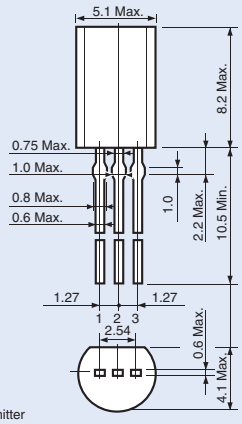

1. Emitter
2. Collector
3. Base

MSTM

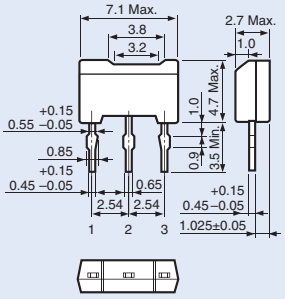

1. Base
2. Collector
3. Emitter

New PW-Mold

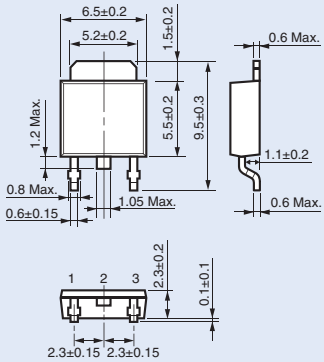

1. Base
2. Collector (heatsink)
3. Emitter

New PW-Mold 2

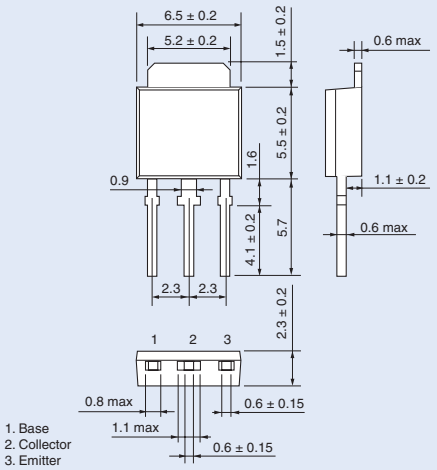

VS-6

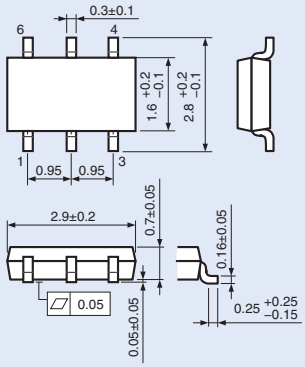

(1 in 1)

1. Collector
2. Collector
3. Base
4. Emitter
5. Collector
6. Collector

PS-8

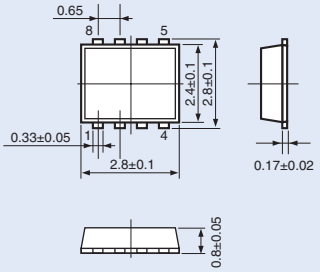

(1 in 1)

1. Collector
2. Collector
3. Collector
4. Base
5. Emitter
6. Collector
7. Collector
8. Collector

TO-126

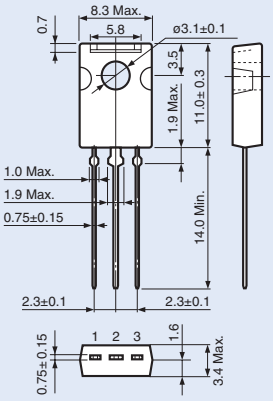

1. Emitter
2. Collector
3. Base

TO-220
TO-220NIS

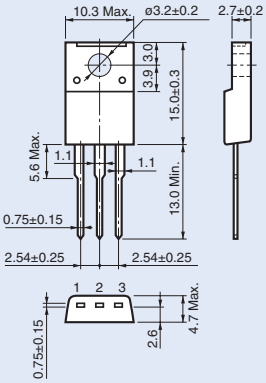

1. Base
2. Collector
3. Emitter

TFP

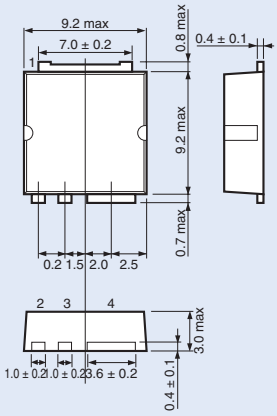

1. Collecter (heatsink)
2. Base
3. N.C.
4. Emitter

TO-3P
TO-3P (N)

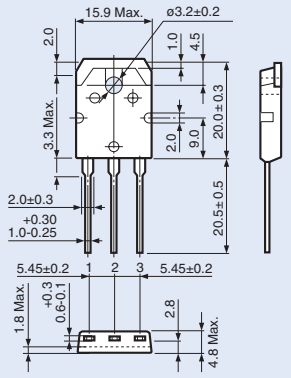

1. Base
2. Collector (heatsink)
3. Emitter

TO-3P
TO-3P (N) IS

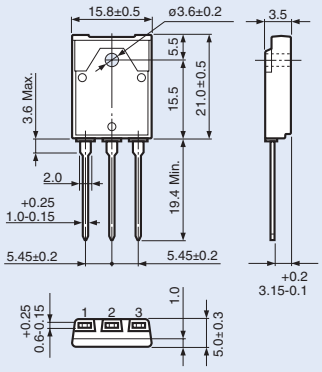

1. Base
2. Collector
3. Emitter

Large TO-3
TO-3P (L)

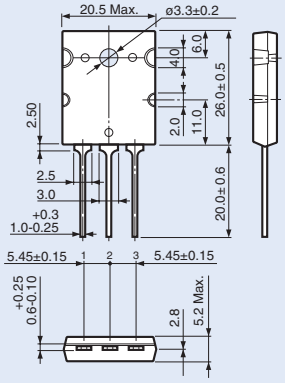

1. Base
2. Collector (heatsink)
3. Emitter

Product Lineup

Part Number	Package	V_{CEO} (V)	I_C (A)	Remarks	Page
2SA817A	LSTM	–80	–0.4		21
2SA949	LSTM	–150	–0.05		21
2SA965	LSTM	–120	–0.8		21
2SA966	LSTM	–30	–1.5		21
2SA1013	LSTM	–160	–1		21
2SA1020	LSTM	–50	–2		21
2SA1145	LSTM	–150	–0.05		21
2SA1160	LSTM	–10	–2		21
2SA1201	PW-Mini(SC-62)	–120	–0.8		27
2SA1202	PW-Mini(SC-62)	–80	–0.4		27
2SA1203	PW-Mini(SC-62)	–30	–1.5		27
2SA1204	PW-Mini(SC-62)	–30	–0.8		27
2SA1225	PW-Mold(SC-63/64)	–160	–1.5		28
2SA1241	PW-Mold(SC-63/64)	–50	–2		28
2SA1242	PW-Mold(SC-63/64)	–20	5		28
2SA1244	PW-Mold(SC-63/64)	–50	–5		28
2SA1315	LSTM	–80	–2		21
2SA1360	TO-126	–150	–0.05		23
2SA1382	LSTM	–50	–2		21
2SA1384	PW-Mini(SC-62)	–300	–0.1		27
2SA1425	MSTM	–120	–0.8		22
2SA1426	MSTM	–30	–0.8		22
2SA1428	MSTM	–50	–2		22
2SA1429	MSTM	–80	–2		22
2SA1430	MSTM	–10	–2		22
2SA1431	MSTM	–20	–5		22
2SA1432	MSTM	–300	–0.1		22
2SA1452A	TO-220NIS	–80	–12		24
2SA1483	PW-Mini(SC-62)	–45	–0.2		27
2SA1680	LSTM	–50	–2		21
2SA1761	LSTM	–50	–3		21
2SA1837	TO-220NIS	–230	–1		24
2SA1869	TO-220NIS	–50	–3		24
2SA1926	MSTM	–80	–3		22
2SA1931	TO-220NIS	–50	–5		24
2SA1941	TO-3P(N)	–140	–10		25
2SA1942	TO-3P(L)	–160	–12		26
2SA1943	TO-3P(L)	–230	–15		26
2SA1962	TO-3P(N)	–230	–15		25
2SA1971	PW-Mini(SC-62)	–400	–0.5		27
2SA1972	LSTM	–400	–0.5		21
2SA1986	TO-3P(N)	–230	–15		25
2SA1987	TO-3P(L)	–230	–15		26
2SA2034	PW-Mold(SC-63)	–400	–2		28
2SA2056	TSM	–50	–2	Low-saturation voltage	29
2SA2058	TSM	–10	–1.5	Low-saturation voltage	29
2SA2059	PW-Mini(SC-62)	–20	–3	Low-saturation voltage	27
2SA2060	PW-Mini(SC-62)	–50	–2	Low-saturation voltage	27

Part Number	Package	V_{CEO} (V)	I_C (A)	Remarks	Page
2SA2061	TSM	–20	–2.5	Low-saturation voltage	29
2SA2065	TSM	–20	–1.5	Low-saturation voltage	29
2SA2066	PW-Mini(SC-62)	–10	–2	Low-saturation voltage	27
2SA2069	PW-Mini(SC-62)	–20	–1.5	Low-saturation voltage	27
2SA2070	PW-Mini(SC-62)	–50	–1	Low-saturation voltage	27
2SA2097	PW-Mold(SC-63)	–50	–5	Low-saturation voltage	28
2SA2120	TO-3P(N)	–200	–12		25
2SA2121	TO-3P(L)	–200	–15		26
2SA2142	PW-Mold(SC-63)	–600	–0.5		28
2SA2184	PW-Mold(SC-63)	–550	–1		28
2SA2206	PW-Mini(SC-62)	–80	–2		27
2SA2219	MSTM	–160	–1.5		22
2SB905	PW-Mold(SC-63/64)	–150	–1.5		28
2SB906	PW-Mold(SC-63/64)	–60	–3		28
2SB907	PW-Mold(SC-63/64)	–40	–3	Darlington	28
2SB908	PW-Mold(SC-63/64)	–80	–4	Darlington	28
2SB1020A	TO-220NIS	–100	–7	Darlington	24
2SB1067	TO-126	–80	–2	Darlington	23
2SB1375	TO-220NIS	–60	–3		24
2SB1457	LSTM	–100	–2	Darlington	21
2SB1481	TO-220NIS	–100	–4	Darlington	24
2SB1495	TO-220NIS	–100	–3	Darlington	24
2SC2073A	TO-220NIS	150	1.5		24
2SC2229	LSTM	150	0.05		21
2SC2230	LSTM	160	0.1		21
2SC2230A	LSTM	180	0.1		21
2SC2235	LSTM	120	0.8		21
2SC2236	LSTM	30	1.5		21
2SC2383	LSTM	160	1		21
2SC2655	LSTM	50	2		21
2SC2881	PW-Mini(SC-62)	120	0.8		27
2SC2882	PW-Mini(SC-62)	80	0.4		27
2SC2884	PW-Mini(SC-62)	30	0.8		27
2SC3072	PW-Mold(SC-63/64)	20	5		28
2SC3074	PW-Mold(SC-63/64)	50	5		28
2SC3076	PW-Mold(SC-63/64)	50	2		28
2SC3303	PW-Mold(SC-63/64)	80	5		28
2SC3307	TO-3P(L)	800	10		26
2SC3328	LSTM	80	2		21
2SC3405	PW-Mold(SC-63/64)	800	0.8		28
2SC3422	TO-126	40	3		23
2SC3423	TO-126	150	0.05		23
2SC3515	PW-Mini(SC-62)	300	0.1		27
2SC3665	MSTM	120	0.8		22
2SC3668	MSTM	50	2		22
2SC3669	MSTM	80	2		22
2SC3670	MSTM	10	2		22
2SC3671	MSTM	20	5		22

*: Collector-base voltage (V_{CBO})

Part Number	Package	V_{CEO} (V)	I_C (A)	Remarks	Page
2SC3673	MSTM	40	2		22
2SC3710A	TO-220NIS	80	12		24
2SC4408	LSTM	50	2		21
2SC4544	TO-220NIS	300	0.1		24
2SC4604	LSTM	50	3		21
2SC4682	LSTM	15	3		21
2SC4683	MSTM	15	3		22
2SC4686	TO-220NIS	1000	0.05		24
2SC4686A	TO-220NIS	1200	0.05		24
2SC4688	TO-3P(N)IS	80	6		25
2SC4689	TO-3P(N)IS	120	8		25
2SC4690	TO-3P(N)IS	140	10		25
2SC4793	TO-220NIS	230	1		24
2SC4881	TO-220NIS	50	5		24
2SC4935	TO-220NIS	50	3		24
2SC5122	LSTM	400	0.05		21
2SC5171	TO-220NIS	180	2		24
2SC5172	TO-220NIS	400	5		24
2SC5196	TO-3P(N)	80	6		25
2SC5197	TO-3P(N)	120	8		25
2SC5198	TO-3P(N)	140	10		25
2SC5199	TO-3P(L)	160	12		26
2SC5200	TO-3P(L)	230	15		26
2SC5201	LSTM	600	0.05		21
2SC5242	TO-3P(N)	230	15		25
2SC5352	TO-3P(N)	400	10		25
2SC5353	TO-220NIS	800	3		24
2SC5354	TO-3P(N)	800	5		25
2SC5358	TO-3P(N)	230	15		25
2SC5359	TO-3P(L)	230	15		26
2SC5458	PW-Mold(SC-63/64)	400	0.8		28
2SC5459	TO-220NIS	400	3		24
2SC5460	TO-126	800	0.05		23
2SC5466	TO-220NIS	800	0.05		24
2SC5548	PW-Mold(SC-63/64)	370	2		28
2SC5548A	PW-Mold(SC-63/64)	400	2		28
2SC5549	LSTM	400	1		21
2SC5692	TSM	50	2.5	Low-saturation voltage	29
2SC5703	TSM	50	4	Low-saturation voltage	29
2SC5712	PW-Mini(SC-62)	50	3	Low-saturation voltage	27
2SC5713	PW-Mini(SC-62)	10	4	Low-saturation voltage	27
2SC5714	PW-Mini(SC-62)	20	4	Low-saturation voltage	27
2SC5738	TSM	20	3.5	Low-saturation voltage	29
2SC5755	TSM	10	2	Low-saturation voltage	29
2SC5784	TSM	20	1.5	Low-saturation voltage	29
2SC5785	PW-Mini(SC-62)	10	2	Low-saturation voltage	27
2SC5810	PW-Mini(SC-62)	50	1	Low-saturation voltage	27
2SC5819	PW-Mini(SC-62)	20	1.5	Low-saturation voltage	27

Part Number	Package	V_{CEO} (V)	I_C (A)	Remarks	Page
2SC5886	PW-Mold(SC-63)	50	5	Low-saturation voltage	28
2SC5886A	PW-Mold(SC-63)	50	5	V_{EBO} = 9 V	28
2SC5906	TSM	30	4	For RF	29
2SC5930	MSTM	285	1		22
2SC5948	TO-3P(N)	200	12		25
2SC5949	TO-3P(L)	200	15		26
2SC5976	TSM	30	3	For RF	29
2SC6000	PW-Mold(SC-63)	50	7	For RF	28
2SC6010	MSTM	285	1		22
2SC6033	TSM	50	2.5	For RF	29
2SC6034	MSTM	285	1		22
2SC6040	MSTM	410	1		22
2SC6042	MSTM	375	1		22
2SC6052	PW-Mold(SC-63)	20	5		28
2SC6061	TSM	120	1		29
2SC6062	TSM	30	5		29
2SC6076	PW-Mold(SC-63)	80	3		28
2SC6079	MSTM	80	2		22
2SC6124	PW-Mini(SC-62)	80	2		27
2SC6125	PW-Mini(SC-62)	20	4		27
2SC6126	PW-Mini(SC-62)	50	3		27
2SC6127	PW-Mold(SC-63)	800	0.05		28
2SC6139	MSTM	160	1.5		22
2SC6142	PW-Mold(SC-64)	375	1.5		28
2SD1140	LSTM	30	1.5	Darlington	21
2SD1220	PW-Mold(SC-63/64)	150	1.5		28
2SD1221	PW-Mold(SC-63/64)	60	3		28
2SD1223	PW-Mold(SC-63/64)	80	4	Darlington	28
2SD1314	TO-3P(L)	450	15	Darlington	26
2SD1415A	TO-220NIS	100	7	Darlington	24
2SD1509	TO-126	80	2	Darlington	23
2SD1525	TO-3P(L)	100	30	Darlington	26
2SD1631	MSTM	30	1.5	Darlington	22
2SD1662	TO-3P(N)	100	15	Darlington	25
2SD2012	TO-220NIS	60	3		24
2SD2079	TO-220NIS	100	5	Darlington	24
2SD2088	LSTM	60±10	2	Darlington	21
2SD2092	TO-220NIS	100	3		24
2SD2129	TO-220NIS	100	3	Darlington	24
2SD2131	TO-220NIS	60±10	5	Darlington	24
2SD2204	TO-220NIS	60±10	4	Darlington	24
2SD2206	LSTM	100	2	Darlington	21
2SD2241	TO-220NIS	100	4	Darlington	24
2SD2257	TO-220NIS	100	3	Darlington	24
2SD2352	TO-220NIS	60	2		24
2SD2536	LSTM	100±15	2	Darlington	21
2SD2604	TO-220NIS	110±15	5	Darlington	24
2SD2636	TO-3P(N)	150	8		25

*: Collector-base voltage (V_{CBO})

Part Number	Package	V_{CEO} (V)	I_C (A)	Remarks	Page
2SD2686	PW-Mini(SC-62)	60±10	1	Darlington	27
2SD2695	LSTM	60±10	2	Darlington	21
2SD2719	TSM	60±10	0.8	Darlington	29
HN4B101J	SMV	30/–30	1.2/–1	NPN+PNP	29
HN4B102J	SMV	30/–30	2/–1.8	NPN+PNP	29
TPC6501	VS-6(1in1)	10	2	1-in-1 transistor	30
TPC6502	VS-6(1in1)	50	3	1-in-1 transistor	30
TPC6503	VS-6(1in1)	20	1.5	1-in-1 transistor	30
TPC6504	VS-6(1in1)	50	1	1-in-1 transistor	30
TPC6601	VS-6(1in1)	–50	–2	1-in-1 transistor	30
TPC6602	VS-6(1in1)	–10	–2	1-in-1 transistor	30
TPC6603	VS-6(1in1)	–20	–3	1-in-1 transistor	30
TPC6604	VS-6(1in1)	–50	–1	1-in-1 transistor	30
TPC6701	VS-6(2in1)	50	1	2-in-1 transistor	30
TPC6901A	VS-6(2in1)	50/–50	1/–0.7	NPN+PNP	30
TPC6902	VS-6(2in1)	30/–30	2/–1.7	NPN+PNP	30
TPC6D02	VS-6(2in1)	–15	–1.0	Transistor + Diode	30
TPC6D03	VS-6(2in1)	–20	–1.2	Transistor + Diode	30
TPCP8501	PS-8(1in1)	100	2	1-in-1 transistor	30
TPCP8504	PS-8(1in1)	10	2	1-in-1 transistor	30
TPCP8505	PS-8(1in1)	50	3	1-in-1 transistor	30
TPCP8507	PS-8(1in1)	120	1	1-in-1 transistor	30
TPCP8508	PS-8(1in1)	375	1	1-in-1 transistor	30
TPCP8510	PS-8(1in1)	120	1	1-in-1 transistor	30
TPCP8511	PS-8(1in1)	50	3	1-in-1 transistor	30
TPCP8601	PS-8(1in1)	–20	–4	1-in-1 transistor	30
TPCP8602	PS-8(1in1)	–50	–2.5	1-in-1 transistor	30
TPCP8603	PS-8(1in1)	–120	–1	1-in-1 transistor	30
TPCP8604	PS-8(1in1)	–400	–0.3	1-in-1 transistor	30
TPCP8701	PS-8(2in1)	50	2	2-in-1 transistor	30
TPCP8801	PS-8(2in1)	–30	–1.2	2-in-1 transistor	30
TPCP8901	PS-8(2in1)	50/–50	1/–0.8	NPN+PNP	30
TPCP8902	PS-8(2in1)	30/–30	2/–2	NPN+PNP	30
TPCP8F01	PS-8(2in1)	–20	–3	Transistor + S-MOS	30
TPCP8G01	PS-8(2in1)	–20	–3	Transistor + Pch	30
TPCP8H01	PS-8(2in1)	50	5	Transistor + S-MOS	30
TPCP8H02	PS-8(2in1)	30	3	Transistor + S-MOS	30
TPCP8L01	PS-8(2in1)	120	0.9	Darlington + HED	30
TTA0001	TO-3P(N)	–160	–18		25
TTA0002	TO-3P(L)	–160	–18		26
TTA003	PW-Mold(SC-63)	–80	–3		28
TTA004	TO-126	–160	–1.5		23
TTA007	TSM	–50	–1		29
TTA1943	TO-3P(L)	–230	–15		26
TTB001	TFP	–60	–3		27
TTB002	PW-Mold(SC-63)	–60	–3		28
TTC0001	TO-3P(N)	160	18		25
TTC0002	TO-3P(L)	160	18		26

Part Number	Package	V_{CEO} (V)	I_C (A)	Remarks	Page
TTC003	PW-Mold(SC-64)	400	1.5		28
TTC004	TO-126	160	1.5		23
TTC005	PW-Mini(SC-62)	285	1		27
TTC007	TSM	50	1		29
TTC008	PW-Mold(SC-64)	285	1.5		28
TTC009	TO-220NIS	80	3		24
TTC011	TO-126	230	1		23
TTC012	PW-Mold(SC-64)	375	2		28
TTC013	PW-Mini(SC-62)	350	0.5		27
TTC5200	TO-3P(L)	230	15		26
TTC13003L	LSTM	400	1.5		21

*: Collector-base voltage (V_{CBO})

OVERSEAS SUBSIDIARIES AND AFFILIATES

(As of April 1, 2011)

Toshiba America Electronic Components, Inc.

- Irvine, Headquarters
  Tel: (949)623-2900 Fax: (949)474-1330
- Buffalo Grove (Chicago)
  Tel: (847)484-2400 Fax: (847)541-7287
- Duluth/Atlanta
  Tel: (770)931-3363 Fax: (770)931-7602
- El Paso
  Tel: (915)771-8156
- Marlborough
  Tel: (508)481-0034 Fax: (508)481-8828
- Parsippany
  Tel: (973)541-4715 Fax: (973)541-4716
- San Jose
  Tel: (408)526-2400 Fax: (408)526-2410
- Wixom (Detroit)
  Tel: (248)347-2607 Fax: (248)347-2602
- Bloomington
  Tel: (952)842-2400 Fax: (952)893-8031
- San Diego
  Tel: (858)385-5900 Fax: (858)674-7606

Toshiba Electronics do Brasil Ltda.
Tel: (011)2539-6681 Fax: (011)2539-6675

Toshiba Electronics Europe GmbH

- Düsseldorf Head Office
  Tel: (0211)5296-0 Fax: (0211)5296-400
- France Branch
  Tel: (1)47282181
- Italy Branch
  Tel: (039)68701 Fax: (039)6870205
- Spain Branch
  Tel: (91)660-6798 Fax: (91)660-6799
- U.K. Branch
  Tel: (0870)060-2370 Fax: (01252)53-0250
- Sweden Branch
  Tel: (08)704-0900 Fax: (08)80-8459

Toshiba Electronics Asia (Singapore) Pte. Ltd.
Tel: (6278)5252 Fax: (6271)5155

Toshiba Electronics Service (Thailand) Co., Ltd.
Tel: (02)501-1635 Fax: (02)501-1638

Toshiba Electronics Trading (Malaysia) Sdn. Bhd.

- Kuala Lumpur Head Office
  Tel: (03)5631-6311 Fax: (03)5631-6307
- Penang Office
  Tel: (04)226-8523 Fax: (04)226-8515

Toshiba India Private Ltd.
Tel: (0124)499-6600 Fax: (0124)499-6611

Toshiba Electronics Asia, Ltd.

- Hong Kong Head Office
  Tel: 2375-6111 Fax: 2375-0969
- Beijing Office
  Tel: (010)6590-8796 Fax: (010)6590-8791
- Chengdu Office
  Tel: (028)8675-1773 Fax: (028)8675-1065
- Qingdao Office
  Tel: (532)8579-3328 Fax: (532)8579-3329

Toshiba Electronics (Shenzhen) Co.,Ltd
Tel: (0755)2399-6897 Fax: (0755)2399-5573

Toshiba Electronics (Shanghai) Co., Ltd.

- Shanghai PUXI Branch
  Tel: (021)6139-3888 Fax: (021)6190-8288
- Hangzhou Office
  Tel: (0571)8717-5004 Fax: (0571)8717-5013
- Nanjing Office
  Tel: (025)8689-0070 Fax: (025)8689-0070

Toshiba Electronics (Dalian) Co., Ltd.
Tel: (0411)8368-6882 Fax: (0411)8369-0822

Tsurong Xiamen Xiangyu Trading Co., Ltd.
Tel: (0592)226-1398 Fax: (0592)226-1399

Toshiba Electronics Korea Corporation

- Seoul Head Office
  Tel: (02)3484-4334 Fax: (02)3484-4302
- Daegu Office
  Tel: (053)428-7610 Fax: (053)428-7617

Toshiba Electronics Taiwan Corporation

- Taipei Head Office
  Tel: (02)2508-9988 Fax: (02)2508-9999

- Toshiba Corporation, and its subsidiaries and affiliates (collectively "TOSHIBA"), reserve the right to make changes to the information in this document, and related hardware, software and systems (collectively "Product") without notice.
- This document and any information herein may not be reproduced without prior written permission from TOSHIBA. Even with TOSHIBA's written permission, reproduction is permissible only if reproduction is without alteration/omission.
- Though TOSHIBA works continually to improve Product's quality and reliability, Product can malfunction or fail. Customers are responsible for complying with safety standards and for providing adequate designs and safeguards for their hardware, software and systems which minimize risk and avoid situations in which a malfunction or failure of Product could cause loss of human life, bodily injury or damage to property, including data loss or corruption. Before customers use the Product, create designs including the Product, or incorporate the Product into their own applications, customers must also refer to and comply with (a) the latest versions of all relevant TOSHIBA information, including without limitation, this document, the specifications, the data sheets and application notes for Product and the precautions and conditions set forth in the "TOSHIBA Semiconductor Reliability Handbook" and (b) the instructions for the application with which the Product will be used with or for. Customers are solely responsible for all aspects of their own product design or applications, including but not limited to (a) determining the appropriateness of the use of this Product in such design or applications; (b) evaluating and determining the applicability of any information contained in this document, or in charts, diagrams, programs, algorithms, sample application circuits, or any other referenced documents; and (c) validating all operating parameters for such designs and applications. **TOSHIBA ASSUMES NO LIABILITY FOR CUSTOMERS' PRODUCT DESIGN OR APPLICATIONS.**
- Product is intended for use in general electronics applications (e.g., computers, personal equipment, office equipment, measuring equipment, industrial robots and home electronics appliances) or for specific applications as expressly stated in this document. Product is neither intended nor warranted for use in equipment or systems that require extraordinarily high levels of quality and/or reliability and/or a malfunction or failure of which may cause loss of human life, bodily injury, serious property damage or serious public impact ("Unintended Use"). Unintended Use includes, without limitation, equipment used in nuclear facilities, equipment used in the aerospace industry, medical equipment, equipment used for automobiles, trains, ships and other transportation, traffic signaling equipment, equipment used to control combustions or explosions, safety devices, elevators and escalators, devices related to electric power, and equipment used in finance-related fields. Do not use Product for Unintended Use unless specifically permitted in this document.
- Do not disassemble, analyze, reverse-engineer, alter, modify, translate or copy Product, whether in whole or in part.
- Product shall not be used for or incorporated into any products or systems whose manufacture, use, or sale is prohibited under any applicable laws or regulations.
- The information contained herein is presented only as guidance for Product use. No responsibility is assumed by TOSHIBA for any infringement of patents or any other intellectual property rights of third parties that may result from the use of Product. No license to any intellectual property right is granted by this document, whether express or implied, by estoppel or otherwise.
- **ABSENT A WRITTEN SIGNED AGREEMENT, EXCEPT AS PROVIDED IN THE RELEVANT TERMS AND CONDITIONS OF SALE FOR PRODUCT, AND TO THE MAXIMUM EXTENT ALLOWABLE BY LAW, TOSHIBA (1) ASSUMES NO LIABILITY WHATSOEVER, INCLUDING WITHOUT LIMITATION, INDIRECT, CONSEQUENTIAL, SPECIAL, OR INCIDENTAL DAMAGES OR LOSS, INCLUDING WITHOUT LIMITATION, LOSS OF PROFITS, LOSS OF OPPORTUNITIES, BUSINESS INTERRUPTION AND LOSS OF DATA, AND (2) DISCLAIMS ANY AND ALL EXPRESS OR IMPLIED WARRANTIES AND CONDITIONS RELATED TO SALE, USE OF PRODUCT, OR INFORMATION, INCLUDING WARRANTIES OR CONDITIONS OF MERCHANTABILITY, FITNESS FOR A PARTICULAR PURPOSE, ACCURACY OF INFORMATION, OR NONINFRINGEMENT.**
- Do not use or otherwise make available Product or related software or technology for any military purposes, including without limitation, for the design, development, use, stockpiling or manufacturing of nuclear, chemical, or biological weapons or missile technology products (mass destruction weapons). Product and related software and technology may be controlled under the Japanese Foreign Exchange and Foreign Trade Law and the U.S. Export Administration Regulations. Export and re-export of Product or related software or technology are strictly prohibited except in compliance with all applicable export laws and regulations.
- Please contact your TOSHIBA sales representative for details as to environmental matters such as the RoHS compatibility of Product. Please use Product in compliance with all applicable laws and regulations that regulate the inclusion or use of controlled substances, including without limitation, the EU RoHS Directive. TOSHIBA assumes no liability for damages or losses occurring as a result of noncompliance with applicable laws and regulations.

©2011 TOSHIBA CORPORATION

Previous edition: BCE0016D
2011-4(1.5k)SO-DQ

TOSHIBA

TOSHIBA CORPORATION
Semiconductor Company
Website: http://www.semicon.toshiba.co.jp/eng