SHEET OF

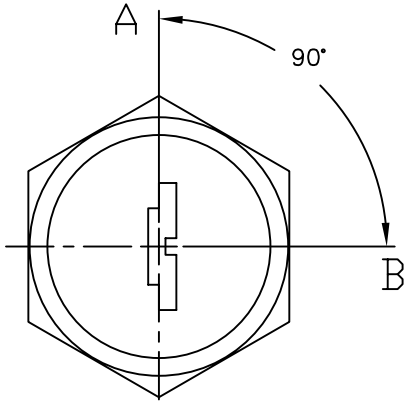

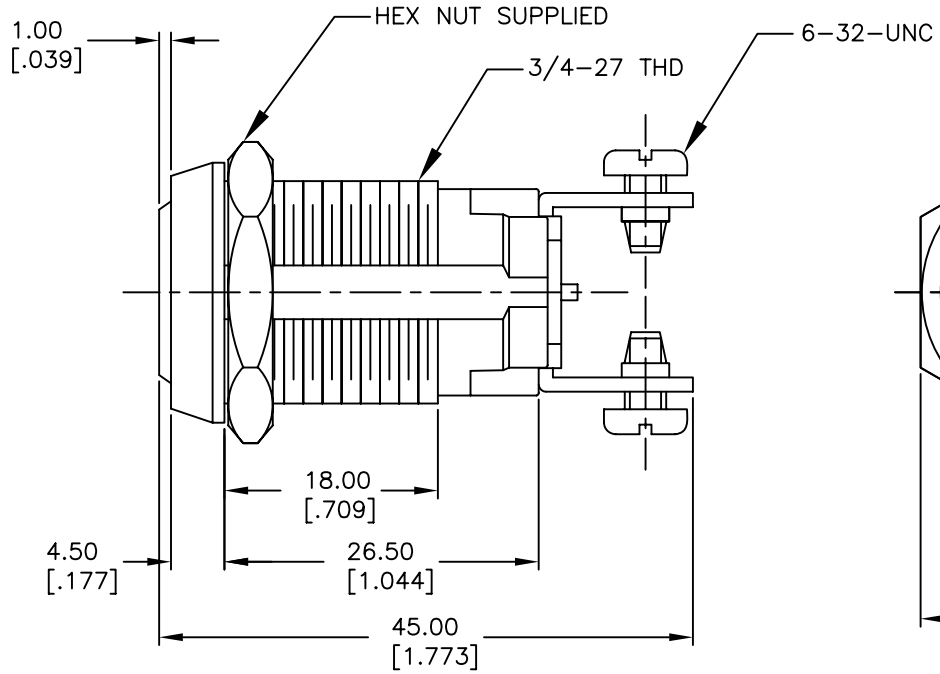

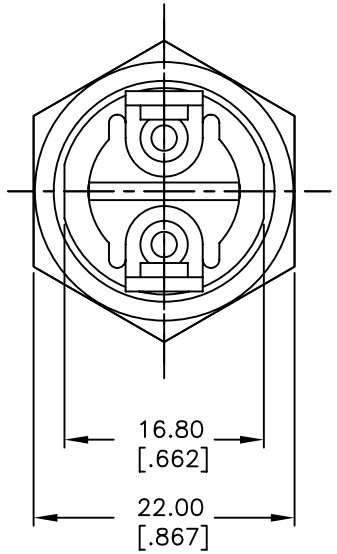

NOTES:

1. ALL DIMENSIONS IN MM [INCH]
2. GENERAL TOLERANCE: X.X=±0.4
   X.XX=±0.25
3. TERM. NOS. FOR REFERENCE ONLY.
4. RATING: 4A @125VAC, 2A @250VAC
5. CONTACT RESISTANCE: 10mILLI-OHMS
6. DIELECTRIC STRENGTH: 1500 VAC-1Minute
7. INSULATION RESISTANCE: 200 Mega-OHMS
8. MATERIALS:
   HOUSING: ZINC ALLOY DIE CAST
   CYLINDER: ZINC ALLOY W/CHROME PLATE
   CONTACTS: SILVER PLATE
   CRISS CROSS TUMBLERS. (11 BLADE)
   DOUBLE BITTED KEYS (2) STAMPED 2007
9. KEYLOCK, KEYS, AND HEX NUT YO BE PACKED TOGETHER IN INDIVIDUAL BAGS.

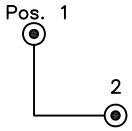

CIRCUIT: SPST
CONTACT CONFIGURATION

SWITCH FUNCTION	
POS 1	POS 2
↑	→
OFF	ON

LEGEND

● = INDICATE NO KEY PULL

⊙ = INDICATES KEY PULL POSSIBLE

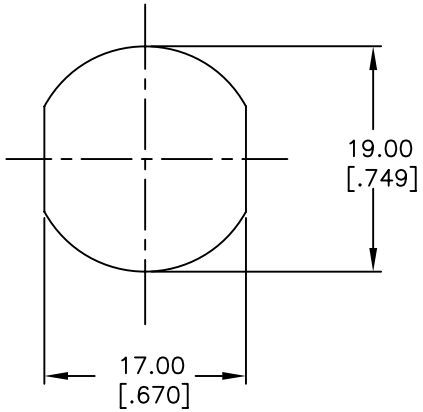

RECOMMENDED PANEL CUTOUT

REV.	ECN No.	DESCRIPTION	DATE	CHKD
C	18008	ADD NOTE 9	3/12/08	RC
B	12872	REMOVE TERM /NOTE 8	3/4/03	CJB
A	11754	RELEASED FOR PRODUCTION	10/17/01	CJB

THE INFORMATION CONTAINED IN THIS DOCUMENT IS PROPRIETARY TO E-SWITCH AND IS NOT TO BE COPIED OR TRANSFERRED

E-SWITCH®

TITLE K0128B-2007

SCALE	DATE	DR	DWG	REV
1.5:1	10/17/01	CJB	K200202	C