Pulse Electronics
www.pulseelectronics.com

NOTES: UNLESS OTHERWISE SPECIFIED

1. NOTICE: RoHS+HF — THIS IS A RoHS AND HALOGEN FREE COMPLIANT COMPONENT/PRODUCT. ALL ENGINEERING CHANGES MUST HAVE PRIOR APPROVAL BY THE DESIGN CENTER.
2. PLASTIC: THERMOSET PLASTIC MATERIAL WITH FLAMMABILITY RATING UL 94V–0 OR BETTER.
3. SOLDERABILITY: CONFORMS TO ANSI/J–STD–002 245°C REFLOW PEAK TEMPERATURE PER IPC/EIA J–STD–003A
4. OPERATING TEMPERATURE: 0°C TO +70°C
5. STORAGE TEMPERATURE: –20°C TO +125°C
6. JEDEC MOISTURE: LEVEL 1.
7. DIMENSIONS ARE IN INCHES WITH THE FOLLOWING TOLERANCES:
   .XX = ±.01
   .XXX = ±.005

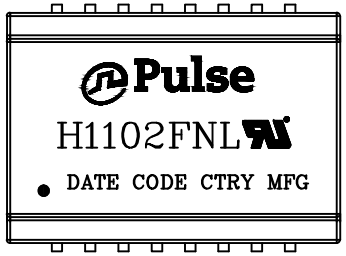

ELECTRICAL CHARACTERISTICS:

ELECTRICAL: @ +25°C

PARAMETER	SPECIFICATIONS			
OPERATING TEMP	0°C – 70 °C			
TURNS RATIO	1 : 1 ±2%			
POLARITY	PER SCHEMATIC			
INSERTION LOSS	100 KHz – 100 MHz			
	–1.1 dB MAX			
RETURN LOSS, 1000BT (Z OUT = 100 OHM ±15%)	.1–30 MHz	30–60 MHz	60–80 MHz	
	–16 dB MIN	$-10+20*LOG_{10}$ (f/60 MHz) dB MIN	–10 dB MIN	
INDUCTANCE (OCL) (MEDIA SIDE, 0°C–70°C)	350 uH MIN (MEASURED AT 100 KHz, 100 mVRMS AND WITH 8 mA DC BIAS)			
CROSSTALK, ADJACENT CHANNELS	1 MHz	30 MHz	60 MHz	100 MHz
	–35 dB MIN	–35 dB MIN	–30 dB MIN	–30 dB MIN
DIFFERENTIAL TO COMMON MODE REJECTION	30 MHz	60 MHz	100 MHz	
	–42 dB MIN	–37 dB MIN	–30 dB MIN	
DC RESISTANCE, 1/2 WINDING	.65 OHMS MAX			
DC RESISTANCE IMBALANCE	±.065 OHMS MAX (CENTER TAP SYMMETRY)			
INPUT – OUTPUT ISOLATION	1500 VRMS MIN @ 60 SECONDS			

NOTE: f IS FREQUENCY IN MHz.

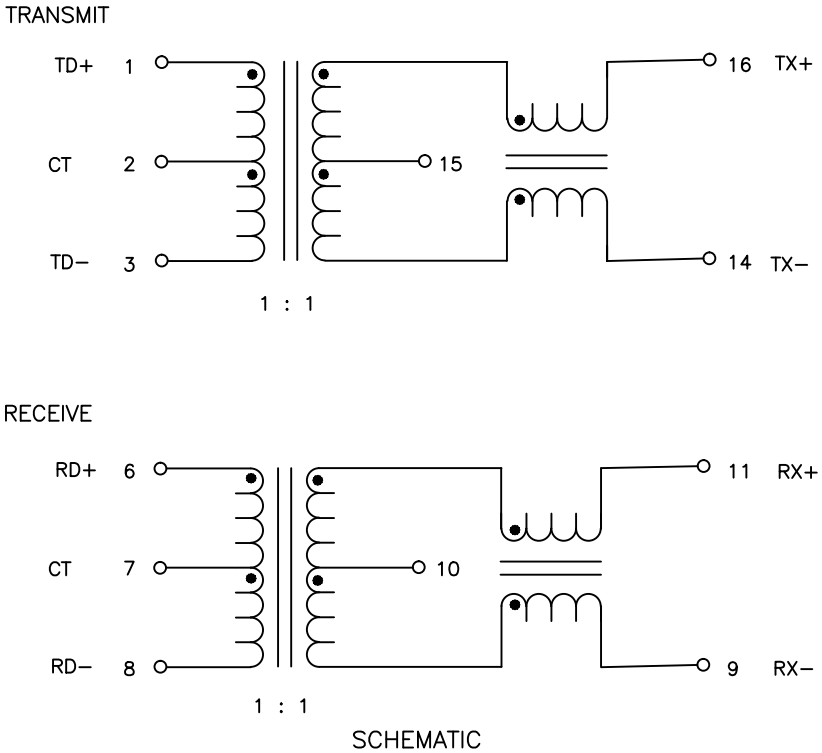

SCHEMATIC

@ Copyright, 2013. Pulse Electronics, Inc. All rights reserved. Drawing specifications subject to change without notice. (8/2/13)

PULSE CONFIDENTIAL & PROPRIETARY	PRODUCT DESCRIPTION	PS DRAWING	SHEET:	DWG. NO./ PART NO.	REV.
	MDL,SIN,100D,1:1,SMT,HF	PS–2005.002–C	1	H1102FNL	M10

Pulse Electronics
www.pulseelectronics.com

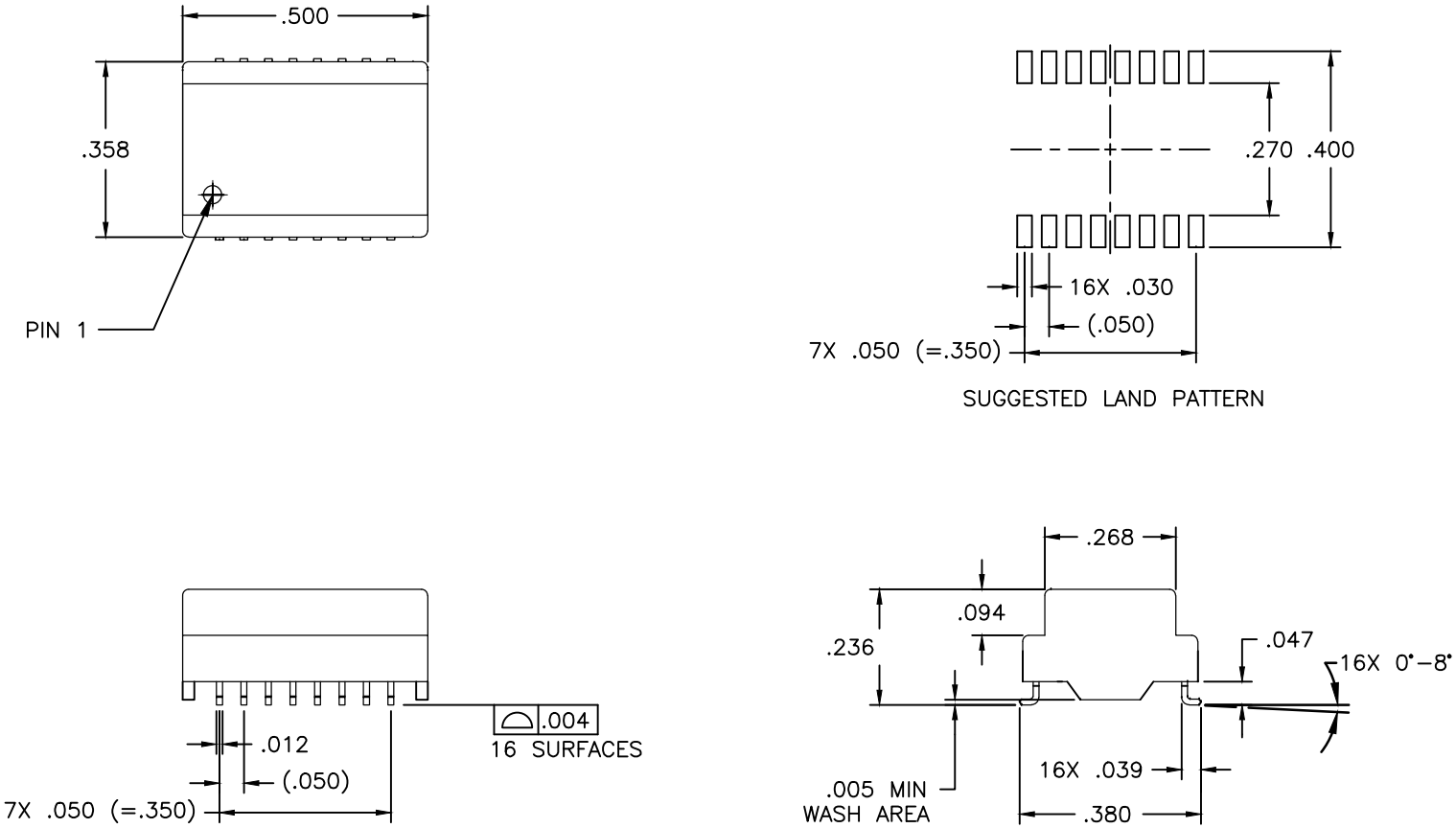

© Copyright, 2013. Pulse Electronics, Inc. All rights reserved. Drawing specifications subject to change without notice. (8/2/13)

PULSE CONFIDENTIAL & PROPRIETARY	PRODUCT DESCRIPTION	PS DRAWING	SHEET:	DWG. NO./ PART NO.	REV.
	MDL,SIN,100D,1:1,SMT,HF	PS–2005.002–C	2	H1102FNL	M10