PH5502B2NA1-E4

Data Sheet

R08DS0038EJ0100
Rev.1.00
Oct 05, 2011

Ambient Illuminance Sensor

DESCRIPTION

The PH5502B2NA1-E4 is an ambient illuminance sensor with a photo diode and current amplifier. This product has spectral characteristics close to human eye sensitivity and outputs light current proportional to the ambient brightness.

The PH5502B2NA1-E4 can be used to improve the performance and reduce the power consumption of digital equipment such as FPD-TV sets and mobile phones, by enabling automatic brightness control and automatic switching on and off of lighting systems.

FEATURES

- Small and thin SON package 2.55 x 1.56 x 0.55 mm
- Spectral characteristics close to human eye sensitivity
  Peak sensitivity wavelength 555 nm TYP.
- Output characteristics proportional to illuminance
- Large output light current 230 μA TYP.@100 lx (Fluorescent light)
- Low voltage operation V_{CC} = 1.8 to 5.5 V
- Pb-free

APPLICATIONS

- FPD TV sets, displays
- Mobile phones, smartphones
- Notebook PCs, tablet PCs
- DSCs, DVCs
- FA equipment
- Lighting systems, etc.

PACKAGE DIMENSIONS (UNIT: mm)

TOP VIEW

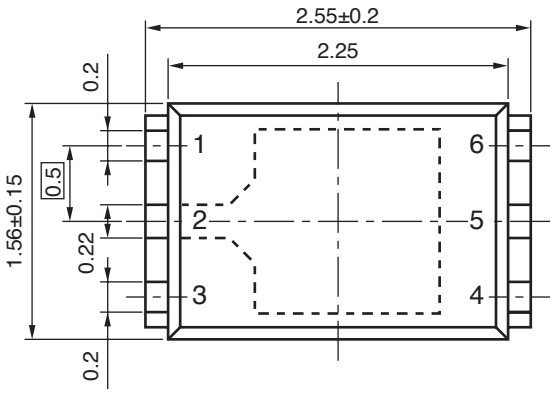

Remark Pin 1 is distinguishable by the shape of the lead frame.

SIDE VIEW

BOTTOM VIEW

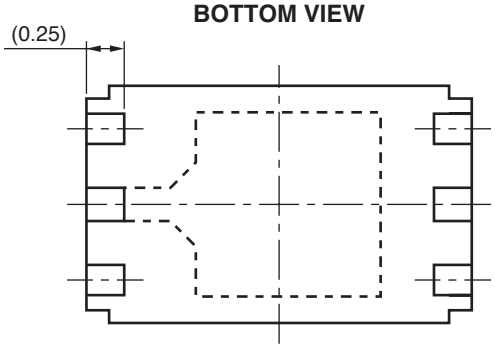

Remark ( ) indicates nominal dimensions.

Pin No.	Terminal
1	OUT
2	GND
3	V_{CC}
4	NC
5	NC
6	NC

Remark 1. Connect all the NC terminals to GND or V_{CC}.
2. The bypass capacitor between V_{CC} and GND is to be mounted within 20 mm of the package body.

BLOCK DIAGRAM

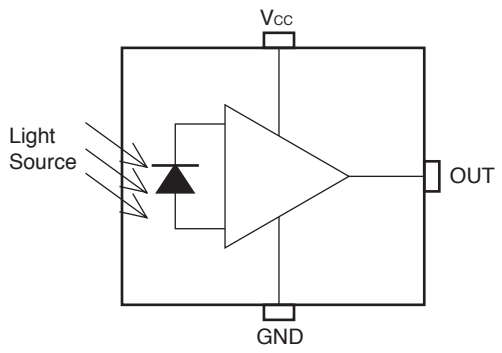

MARKING EXAMPLE

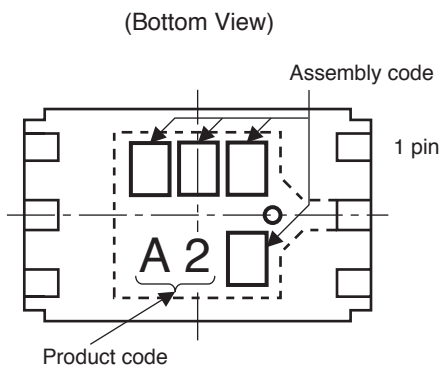

ABSOLUTE MAXIMUM RATINGS (T_A = 25°C, unless otherwise specified)

Parameter	Symbol	Ratings	Unit
Supply Voltage	V_{CC}	6	V
Light Current	I_O	5	mA
Power Dissipation *1	P_D	135	mW
Operating Temperature	T_{opt}	–30 to +85	°C
Storage Temperature	T_{stg}	–40 to +100	°C

Note: *1. Mounted on glass epoxy board (18 mm × 13 mm × ^{t}0.8 mm)

RECOMMENDED OPERATING CONDITIONS

Parameter	Symbol	MIN.	TYP.	MAX.	Unit
Supply Voltage	V_{CC}	1.8	3.0	5.5	V

ELECTRO-OPTICAL CHARACTERISTICS (T_A = 25°C, V_{CC} = 3.0 V, unless otherwise specified)

Parameter		Symbol	Conditions	MIN.	TYP.	MAX.	Unit
Supply Current *1		I_{CC}	E_V = 100 lx *2	–	260	–	μA
Peak Sensitivity Wavelength		λ_p	—	–	555	–	nm
Light Current *1		I_{O0}	E_V = 0 lx	–	—	0.1	μA
		I_{O1}	E_V = 10 lx *2	–	23	–	μA
		I_{O2}	E_V = 100 lx *3	–	330	–	μA
		I_{O3}	E_V = 100 lx *2	195	230	265	μA
Saturation Output Voltage *4		V_O	E_V = 100 lx, R_L = 150 kΩ *2	2.6	2.9	–	V
Switching Time *5	Rise Time	t_r	R_L = 5 kΩ *6	–	200	—	μs
	Fall Time	t_f		–	250	—	μs
	Delay Time	t_d		–	400	—	μs
	Storage Time	t_s		–	10	—	μs

Note: *1 Measured under load resistance conditions of an output current unsaturated
*2 Fluorescent light
*3 Incandescent light
*4 Saturation output voltage measurement method:

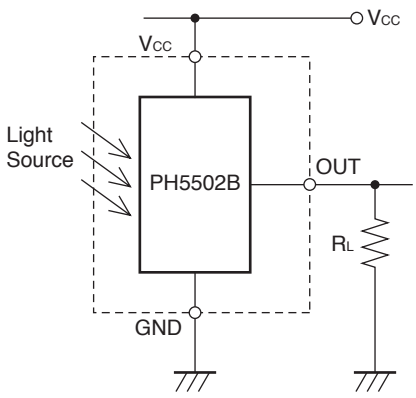

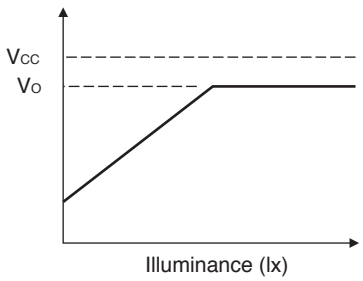

*5 Switching Time

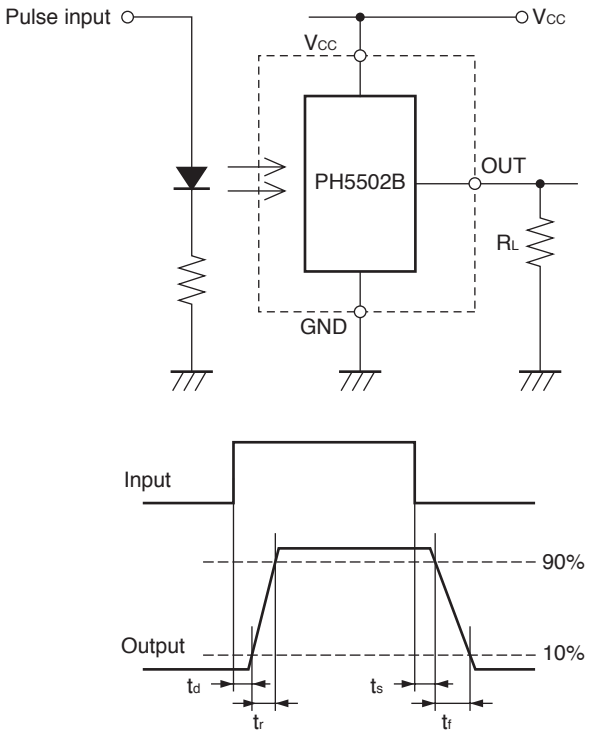

*6 White LED

TYPICAL CHARACTERISTICS (T_A = 25°C, V_{CC} = 3.0 V, unless otherwise specified)

SPECTRAL SENSITIVITY CHARACTERISTICS

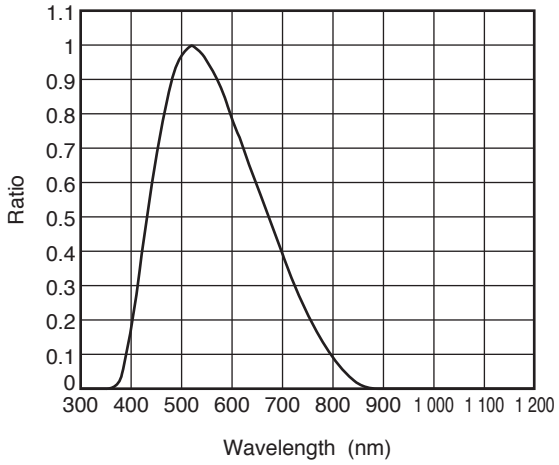

LIGHT SOURCE SENSITIVITY VARIATION

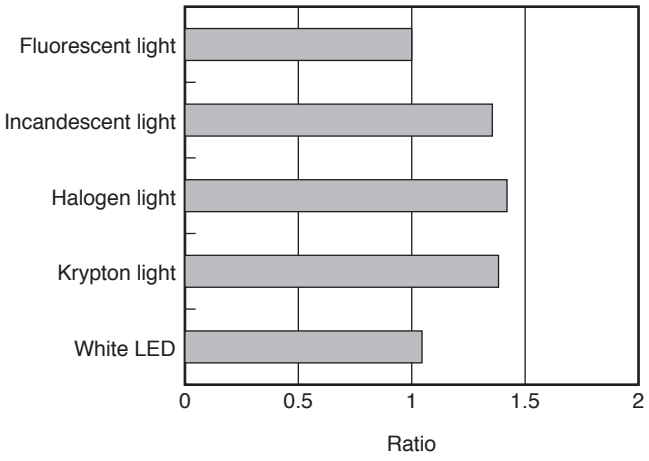

DIRECTIONAL CHARACTERISTICS 1

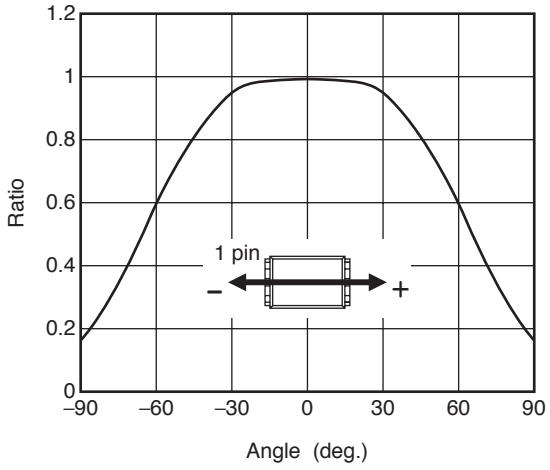

DIRECTIONAL CHARACTERISTICS 2

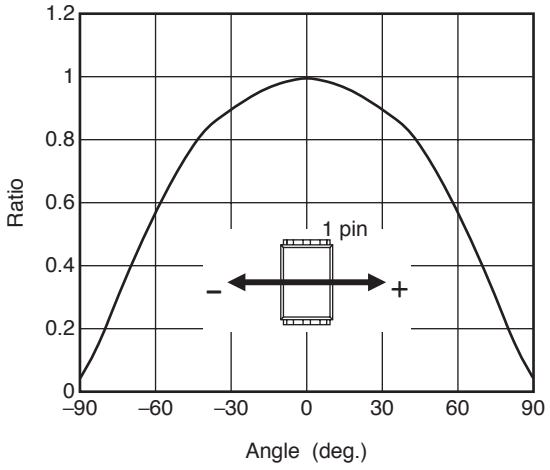

Remark The graphs indicate nominal characteristics.

LIGHT CURRENT VS. ILLUMINANCE

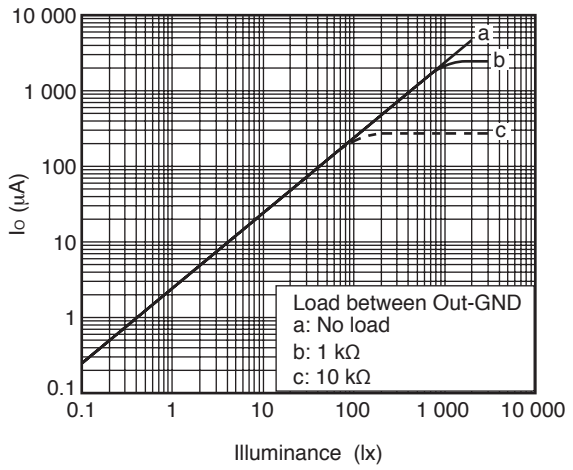

TEMPERATURE DEPENDENCY OF LIGHT CURRENT AT 0 lx

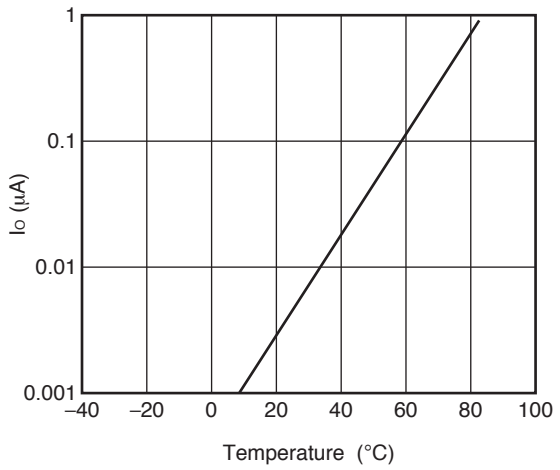

TEMPERATURE DEPENDENCY OF LIGHT CURRENT AT 100 lx (NORMALIZED AT 25°C)

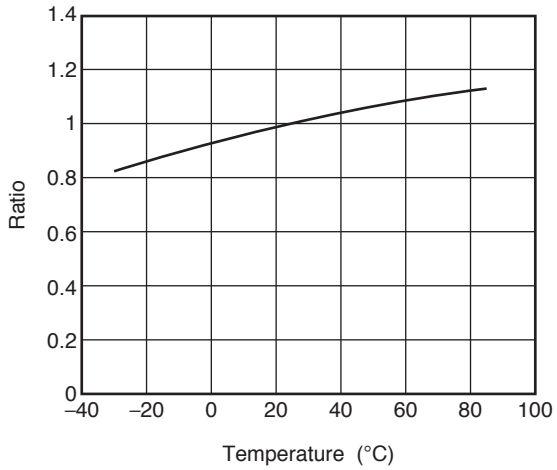

VCC DEPENDENCY OF LIGHT CURRENT AT 100 lx (NORMALIZED AT VCC = 3 V)

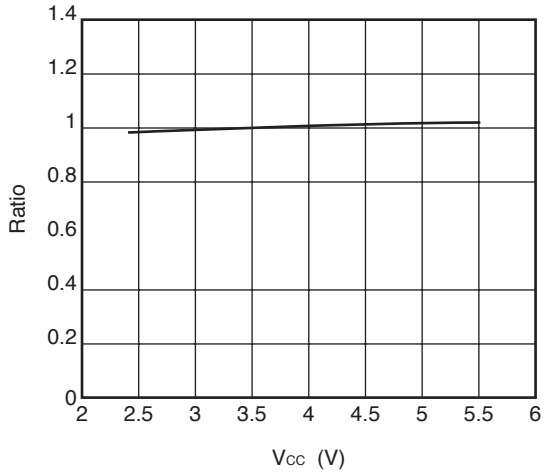

Remark The graphs indicate nominal characteristics.

TAPING SPECIFICATIONS (UNIT: mm)

Outline and Dimensions (Tape)

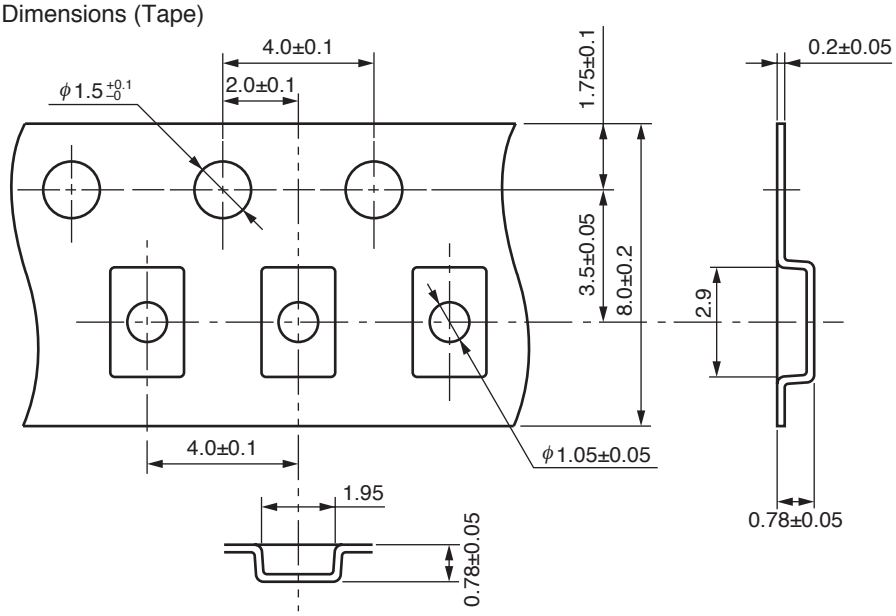

Tape Direction

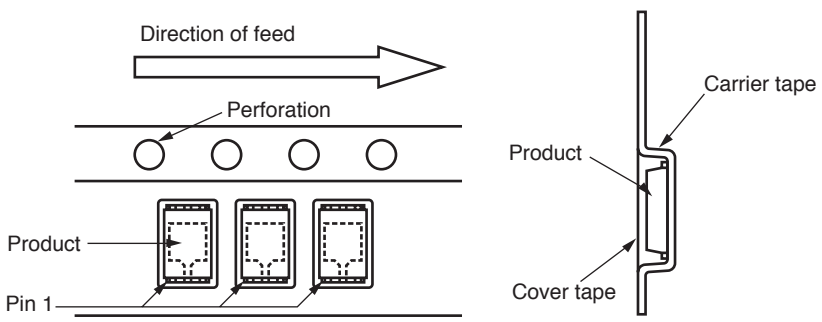

Outline and Dimensions (Reel)

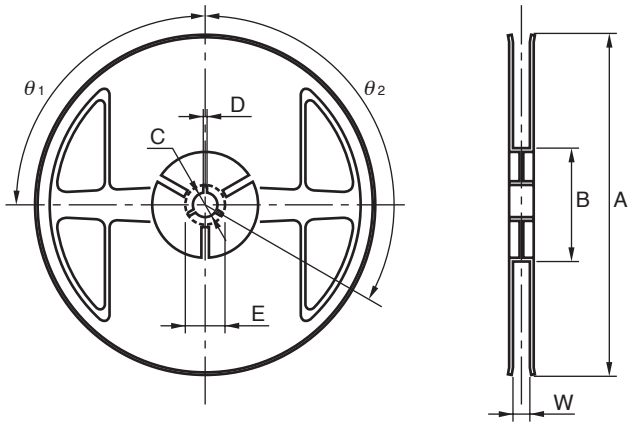

Symbol	Dimensions (mm)
A	$\phi 180^{+0}_{-1.5}$
B	$\phi 60^{+1}_{-0}$
W	9.0^{+1}_{-0}

Symbol	Dimensions (mm)
C	ϕ13±0.2
D	2.0±0.5
E	21.0±0.8
θ_1	90°
θ_2	120°

RECOMMENDED MOUNT PAD DIMENSIONS (Unit: mm)

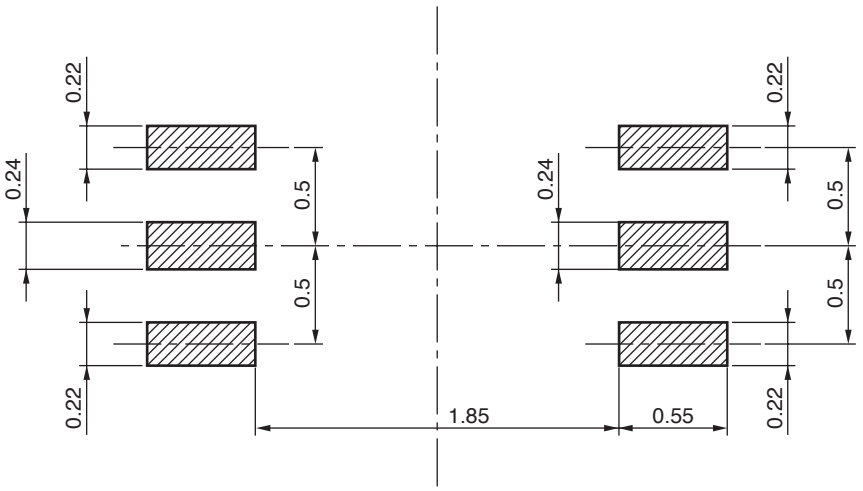

Remark All dimensions in this figure must be evaluated before use.

NOTES ON HANDLING

1. Recommended reflow soldering conditions
   (including infrared reflow, convection reflow, and infrared + convection reflow)

   (1) This product is dry-packed with desiccant in order to avoid moisture absorption.
   (2) After breaking the seal, reflow soldering must be done within 168 hours under the recommended temperature profile shown below.
   (3) If more than 168 hours have passed after breaking the seal, the baking process must be done by using a tape and reel.
   Baking conditions: Once, with tape and reel, 60±5°C, 10 to 24 hours
   After the baking process, this product must be stored under conditions of 30°C or below, 70% RH or below, and reflow soldering must be done within 168 hours.

   <Storage conditions after breaking seal>
   - Storage conditions : 30°C or below, 70% RH or below
   - Maximum storage period after breaking seal : 168 hours (Second reflow soldering must be completed within 168 hours.)

   <Reflow soldering conditions>
   - Peak reflow temperature : 260°C or below (Package surface temperature)
   - Maximum number of reflows : 2
   - No repair by hand soldering
   - Maximum chlorine content of rosin flux (percentage mass) : 0.2% or less

Recommended Temperature Profile of Reflow

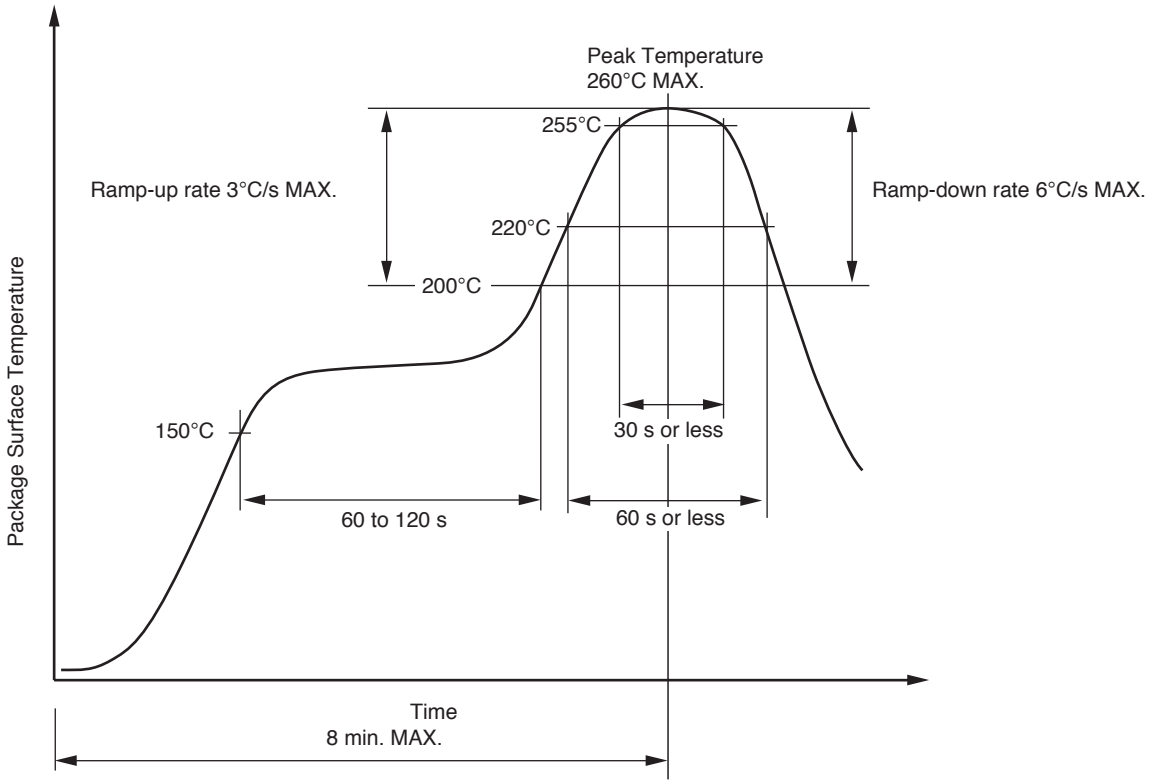

Revision History	PH5502B2NA1-E4 Data Sheet

Rev.	Date	Description	
		Page	Summary
1.00	Oct 05, 2011	–	First edition issued

All trademarks and registered trademarks are the property of their respective owners.

Notice

1. All information included in this document is current as of the date this document is issued. Such information, however, is subject to change without any prior notice. Before purchasing or using any Renesas Electronics products listed herein, please confirm the latest product information with a Renesas Electronics sales office. Also, please pay regular and careful attention to additional and different information to be disclosed by Renesas Electronics such as that disclosed through our website.
2. Renesas Electronics does not assume any liability for infringement of patents, copyrights, or other intellectual property rights of third parties by or arising from the use of Renesas Electronics products or technical information described in this document. No license, express, implied or otherwise, is granted hereby under any patents, copyrights or other intellectual property rights of Renesas Electronics or others.
3. You should not alter, modify, copy, or otherwise misappropriate any Renesas Electronics product, whether in whole or in part.
4. Descriptions of circuits, software and other related information in this document are provided only to illustrate the operation of semiconductor products and application examples. You are fully responsible for the incorporation of these circuits, software, and information in the design of your equipment. Renesas Electronics assumes no responsibility for any losses incurred by you or third parties arising from the use of these circuits, software, or information.
5. When exporting the products or technology described in this document, you should comply with the applicable export control laws and regulations and follow the procedures required by such laws and regulations. You should not use Renesas Electronics products or the technology described in this document for any purpose relating to military applications or use by the military, including but not limited to the development of weapons of mass destruction. Renesas Electronics products and technology may not be used for or incorporated into any products or systems whose manufacture, use, or sale is prohibited under any applicable domestic or foreign laws or regulations.
6. Renesas Electronics has used reasonable care in preparing the information included in this document, but Renesas Electronics does not warrant that such information is error free. Renesas Electronics assumes no liability whatsoever for any damages incurred by you resulting from errors in or omissions from the information included herein.
7. Renesas Electronics products are classified according to the following three quality grades: "Standard", "High Quality", and "Specific". The recommended applications for each Renesas Electronics product depends on the product's quality grade, as indicated below. You must check the quality grade of each Renesas Electronics product before using it in a particular application. You may not use any Renesas Electronics product for any application categorized as "Specific" without the prior written consent of Renesas Electronics. Further, you may not use any Renesas Electronics product for any application for which it is not intended without the prior written consent of Renesas Electronics. Renesas Electronics shall not be in any way liable for any damages or losses incurred by you or third parties arising from the use of any Renesas Electronics product for an application categorized as "Specific" or for which the product is not intended where you have failed to obtain the prior written consent of Renesas Electronics. The quality grade of each Renesas Electronics product is "Standard" unless otherwise expressly specified in a Renesas Electronics data sheets or data books, etc.
   "Standard": Computers; office equipment; communications equipment; test and measurement equipment; audio and visual equipment; home electronic appliances; machine tools; personal electronic equipment; and industrial robots.
   "High Quality": Transportation equipment (automobiles, trains, ships, etc.); traffic control systems; anti-disaster systems; anti-crime systems; safety equipment; and medical equipment not specifically designed for life support.
   "Specific": Aircraft; aerospace equipment; submersible repeaters; nuclear reactor control systems; medical equipment or systems for life support (e.g. artificial life support devices or systems), surgical implantations, or healthcare intervention (e.g. excision, etc.), and any other applications or purposes that pose a direct threat to human life.
8. You should use the Renesas Electronics products described in this document within the range specified by Renesas Electronics, especially with respect to the maximum rating, operating supply voltage range, movement power voltage range, heat radiation characteristics, installation and other product characteristics. Renesas Electronics shall have no liability for malfunctions or damages arising out of the use of Renesas Electronics products beyond such specified ranges.
9. Although Renesas Electronics endeavors to improve the quality and reliability of its products, semiconductor products have specific characteristics such as the occurrence of failure at a certain rate and malfunctions under certain use conditions. Further, Renesas Electronics products are not subject to radiation resistance design. Please be sure to implement safety measures to guard them against the possibility of physical injury, and injury or damage caused by fire in the event of the failure of a Renesas Electronics product, such as safety design for hardware and software including but not limited to redundancy, fire control and malfunction prevention, appropriate treatment for aging degradation or any other appropriate measures. Because the evaluation of microcomputer software alone is very difficult, please evaluate the safety of the final products or system manufactured by you.
10. Please contact a Renesas Electronics sales office for details as to environmental matters such as the environmental compatibility of each Renesas Electronics product. Please use Renesas Electronics products in compliance with all applicable laws and regulations that regulate the inclusion or use of controlled substances, including without limitation, the EU RoHS Directive. Renesas Electronics assumes no liability for damages or losses occurring as a result of your noncompliance with applicable laws and regulations.
11. This document may not be reproduced or duplicated, in any form, in whole or in part, without prior written consent of Renesas Electronics.
12. Please contact a Renesas Electronics sales office if you have any questions regarding the information contained in this document or Renesas Electronics products, or if you have any other inquiries.

(Note 1) "Renesas Electronics" as used in this document means Renesas Electronics Corporation and also includes its majority-owned subsidiaries.

(Note 2) "Renesas Electronics product(s)" means any product developed or manufactured by or for Renesas Electronics.