User's Manual

PC7501

User's Manual

Supported Devices:
M16C / R8C Family

All information contained in these materials, including products and product specifications, represents information on the product at the time of publication and is subject to change by Renesas Electronics Corporation without notice. Please review the latest information published by Renesas Electronics Corporation through various means, including the Renesas Electronics Corporation website (http://www.renesas.com).

Renesas Electronics
www.renesas.com

Rev.5.00 Nov 2010

Notice

1. All information included in this document is current as of the date this document is issued. Such information, however, is subject to change without any prior notice. Before purchasing or using any Renesas Electronics products listed herein, please confirm the latest product information with a Renesas Electronics sales office. Also, please pay regular and careful attention to additional and different information to be disclosed by Renesas Electronics such as that disclosed through our website.
2. Renesas Electronics does not assume any liability for infringement of patents, copyrights, or other intellectual property rights of third parties by or arising from the use of Renesas Electronics products or technical information described in this document. No license, express, implied or otherwise, is granted hereby under any patents, copyrights or other intellectual property rights of Renesas Electronics or others.
3. You should not alter, modify, copy, or otherwise misappropriate any Renesas Electronics product, whether in whole or in part.
4. Descriptions of circuits, software and other related information in this document are provided only to illustrate the operation of semiconductor products and application examples. You are fully responsible for the incorporation of these circuits, software, and information in the design of your equipment. Renesas Electronics assumes no responsibility for any losses incurred by you or third parties arising from the use of these circuits, software, or information.
5. When exporting the products or technology described in this document, you should comply with the applicable export control laws and regulations and follow the procedures required by such laws and regulations. You should not use Renesas Electronics products or the technology described in this document for any purpose relating to military applications or use by the military, including but not limited to the development of weapons of mass destruction. Renesas Electronics products and technology may not be used for or incorporated into any products or systems whose manufacture, use, or sale is prohibited under any applicable domestic or foreign laws or regulations.
6. Renesas Electronics has used reasonable care in preparing the information included in this document, but Renesas Electronics does not warrant that such information is error free. Renesas Electronics assumes no liability whatsoever for any damages incurred by you resulting from errors in or omissions from the information included herein.
7. Renesas Electronics products are classified according to the following three quality grades: “Standard”, “High Quality”, and “Specific”. The recommended applications for each Renesas Electronics product depends on the product’s quality grade, as indicated below. You must check the quality grade of each Renesas Electronics product before using it in a particular application. You may not use any Renesas Electronics product for any application categorized as “Specific” without the prior written consent of Renesas Electronics. Further, you may not use any Renesas Electronics product for any application for which it is not intended without the prior written consent of Renesas Electronics. Renesas Electronics shall not be in any way liable for any damages or losses incurred by you or third parties arising from the use of any Renesas Electronics product for an application categorized as “Specific” or for which the product is not intended where you have failed to obtain the prior written consent of Renesas Electronics. The quality grade of each Renesas Electronics product is “Standard” unless otherwise expressly specified in a Renesas Electronics data sheets or data books, etc.

   “Standard”: Computers; office equipment; communications equipment; test and measurement equipment; audio and visual equipment; home electronic appliances; machine tools; personal electronic equipment; and industrial robots.

   “High Quality”: Transportation equipment (automobiles, trains, ships, etc.); traffic control systems; anti-disaster systems; anti-crime systems; safety equipment; and medical equipment not specifically designed for life support.

   “Specific”: Aircraft; aerospace equipment; submersible repeaters; nuclear reactor control systems; medical equipment or systems for life support (e.g. artificial life support devices or systems), surgical implantations, or healthcare intervention (e.g. excision, etc.), and any other applications or purposes that pose a direct threat to human life.
8. You should use the Renesas Electronics products described in this document within the range specified by Renesas Electronics, especially with respect to the maximum rating, operating supply voltage range, movement power voltage range, heat radiation characteristics, installation and other product characteristics. Renesas Electronics shall have no liability for malfunctions or damages arising out of the use of Renesas Electronics products beyond such specified ranges.
9. Although Renesas Electronics endeavors to improve the quality and reliability of its products, semiconductor products have specific characteristics such as the occurrence of failure at a certain rate and malfunctions under certain use conditions. Further, Renesas Electronics products are not subject to radiation resistance design. Please be sure to implement safety measures to guard them against the possibility of physical injury, and injury or damage caused by fire in the event of the failure of a Renesas Electronics product, such as safety design for hardware and software including but not limited to redundancy, fire control and malfunction prevention, appropriate treatment for aging degradation or any other appropriate measures. Because the evaluation of microcomputer software alone is very difficult, please evaluate the safety of the final products or system manufactured by you.
10. Please contact a Renesas Electronics sales office for details as to environmental matters such as the environmental compatibility of each Renesas Electronics product. Please use Renesas Electronics products in compliance with all applicable laws and regulations that regulate the inclusion or use of controlled substances, including without limitation, the EU RoHS Directive. Renesas Electronics assumes no liability for damages or losses occurring as a result of your noncompliance with applicable laws and regulations.
11. This document may not be reproduced or duplicated, in any form, in whole or in part, without prior written consent of Renesas Electronics.
12. Please contact a Renesas Electronics sales office if you have any questions regarding the information contained in this document or Renesas Electronics products, or if you have any other inquiries.

(Note 1) “Renesas Electronics” as used in this document means Renesas Electronics Corporation and also includes its majority-owned subsidiaries.

(Note 2) “Renesas Electronics product(s)” means any product developed or manufactured by or for Renesas Electronics.

Regulatory Compliance Notices

European Union regulatory notices

This product complies with the following EU Directives. (These directives are only valid in the European Union.)

CE Certifications:

- Electromagnetic Compatibility (EMC) Directive 2004/108/EC

  EN 55022 Class A

WARNING: This is a Class A product. In a domestic environment this product may cause radio interference in which case the user may be required to take adequate measures.

EN 55024

- Information for traceability
  - Authorised representative

    Name: Renesas Electronics Corporation
    Address: 1753, Shimonumabe, Nakahara-ku, Kawasaki, Kanagawa, 211-8668, Japan
  - Manufacturer

    Name: Renesas Solutions Corp.
    Address: Nippon Bldg., 2-6-2, Ote-machi, Chiyoda-ku, Tokyo 100-0004, Japan
  - Person responsible for placing on the market

    Name: Renesas Electronics Europe Limited
    Address: Dukes Meadow, Millboard Road, Bourne End, Buckinghamshire, SL8 5FH, U.K.
  - Trademark and Type name

    Trademark: Renesas
    Product name: M16C/R8C Family Emulator
    Type name: PC7501

WEEE Marking Notice (European Union Only)

Renesas development tools and products are directly covered by the European Union's Waste Electrical and Electronic Equipment, (WEEE), Directive 2002/96/EC. As a result, this equipment, including all accessories, must not be disposed of as household waste but through your locally recognized recycling or disposal schemes. As part of our commitment to environmental responsibility Renesas also offers to take back the equipment and has implemented a Tools Product Recycling Program for customers in Europe. This allows you to return equipment to Renesas for disposal through our approved Producer Compliance Scheme. To register for the program, click here "http://www.renesas.com/weee".

United States Regulatory notices on Electromagnetic compatibility

FCC Certifications (United States Only):

This equipment has been tested and found to comply with the limits for a Class A digital device, pursuant to Part 15 of the FCC Rules. These limits are designed to provide reasonable protection against harmful interference when the equipment is operated in a commercial environment. This equipment generates, uses, and can radiate radio frequency energy and, if not installed and used in accordance with the instruction manual, may cause harmful interference to radio communications. Operation of this equipment in a residential area is likely to cause harmful interference in which case the user will be required to correct the interference at his own expense.

This device complies with Part 15 of the FCC Rules. Operation is subject to the following two conditions: (1) this device may not cause harmful interference, and (2) this device must accept any interference received, including interference that may cause undesired operation.

CAUTION: Changes or modifications not expressly approved by the party responsible for compliance could void the user's authority to operate the equipment.

Preface

The PC7501 system is designed for use with Renesas M16C and R8C Family MCUs. The PC7501 system is configured with the emulator PC7501, an emulation probe M3xxxxTx-EPB or R0ExxxxxxEPB00, an emulator debugger M3T-PDxxF, and a host machine.
This user's manual describes the emulator PC7501 centering around specifications and an explanation of how to set up your PC7501 system. For details about emulation probe M3xxxxTx-EPB or R0ExxxxxxEPB00 and emulator debugger M3T-PDxxF, refer to each user's manual (or Online Help) of them.
To check the components of this product, refer to "2.1 Packing List" (P.15). If there is any suggestion, opinion or question about this product, please contact your local distributor.

To Use the Product Properly

Precautions for Safety

- Either in the PC7501 user's manual or on the product, several icons are used to insure proper handling of this product and also to prevent injuries to you or other persons, or damage to your properties.
- Their graphic images and meanings are given in Chapter 1, Precautions for Safety. Be sure to read this chapter before using the product.

When Using Outside Japan

- When using this product in Europe, the United States, and Canada, be sure to use the emulator PC7501 and the emulation probe M3xxxxTx-EPB or R0ExxxxxxEPB00 which meet the overseas standards.

Table of Contents

Page
Chapter 1 Precautions for Safety ... 9
1.1 Safety Symbols and Meanings ... 9
WARNING ... 10
Warnings for AC Power Supply: ... 10
Warnings to Be Taken for This Product: ... 10
Warning for Installation: ... 10
Warning for Use Environment: ... 10
CAUTION ... 11
Cautions for AC Adapter: ... 11
Cautions to Be Taken for This Product: ... 11
Caution for AC Power Supply: ... 11
Caution for Installation: ... 11
Caution for Communication Interface: ... 11
Cautions to Be Taken for Disposal: ... 11
IMPORTANT ... 12
Note for Installation: ... 12
Notes for Difference between the Actual MCU and Emulator: ... 12
Notes for Unusual Operation: ... 12
Note for Downloading Firmware: ... 12
Note for LPT Parallel Interface: ... 13
Notes for USB Interface: ... 13
Note for LAN Interface: ... 13
Note for Using Memory Expansion and Microprocessor Modes: ... 13
Note for Clock: ... 13
Chapter 2 PC7501 System Configuration ... 15
2.1 Packing List ... 15
2.2 Outline of PC7501 System Configuration ... 16
2.3 PC7501 System Configuration ... 17
2.3.1 Host Machine ... 17
2.3.2 Emulator PC7501 ... 17
2.3.3 Emulation Probe M3xxxxTx-EPB or R0ExxxxxxEPB00 ... 17
2.3.4 Emulator Debugger M3T-PDxxF ... 17
2.4 Specifications ... 18
Chapter 3 External View ... 19
3.1 Names and Functions of Parts on the Upper Panel ... 19
3.1.1 System Status LEDs ... 20
3.1.2 Target Status LEDs ... 20
3.2 Names and Functions of Parts on the Rear Panel ... 21
3.2.1 Interface Selection Switch ... 22
3.2.2 LPT Parallel Interface Connector ... 22
3.2.3 USB Interface Connector ... 22
3.2.4 LAN Interface Connector ... 22
3.2.5 Power Supply Switch ... 22
3.2.6 DC Power Connector ... 22
3.3 Names and Functions of Parts on the Front Panel ... 23
3.3.1 System Reset Switch ... 23
3.3.2 External Trigger Signal Input/Event Output Connectors ... 24

Page

Chapter 4 Setup 25
4.1 Connecting AC Adapter 25
4.2 Connecting Host Machine 26
4.2.1 Connecting by LPT Parallel Interface 27
4.2.2 Connecting by USB Interface 29
4.2.3 Connecting by LAN Interface 31
4.3 Connecting Emulation Probe M3xxxxTx-EPB or R0ExxxxxxEPB00 35
4.4 Downloading Firmware 36
4.4.1 When It is Necessary to Download Firmware 36
4.4.2 Downloading the Firmware in Maintenance Mode 36
4.5 Self-check 37
Chapter 5 Troubleshooting 39
5.1 Emulator PC7501 Cannot Be Powered On 39
5.2 Interface Connection Error 39
5.2.1 LPT Parallel Interface 39
5.2.2 USB Interface 39
5.2.3 LAN Interface 40
5.3 Firmware Download Error 41
5.4 Target Status Error in the Self-check 41
5.5 System Status Error in the Self-check 42
5.6 How to Request for Support 42
Chapter 6 Maintenance and Guarantee 43
6.1 User Registration 43
6.2 Maintenance 43
6.3 Guarantee 43
6.4 Repair Provisions 44
6.5 How to Make Request for Repair 44
Chapter 7 External Dimensions & Interface Cable Specifications 45
7.1 External Dimensions of the Emulator PC7501 45
7.2 LPT Parallel Interface Cable 46

Terminology

Some specific words used in this user's manual are defined as follows:

PC7501 system
This means the emulator system built around the emulator PC7501. This emulator system is configured with the emulator PC7501, an emulation probe M3xxxxTx-EPB or R0ExxxxxxEPB00, an emulator debugger M3T-PDxxF, and a host machine.

Host machine
This means a personal computer where the emulator debugger M3T-PDxxF runs to control the emulator PC7501.

Emulation probe
An emulation probe is provided for each MCU Series or MCU and it emulates the operation of each MCU characteristic. The emulation probe M3xxxxTx-EPB or R0ExxxxxxEPB00 for the emulator PC7501 adopts the evaluation MCU method of equipping the inside of the emulation probe with evaluation MCU.

Emulator debugger
This means a software tool, M3T-PDxxF to control the emulator PC7501 from a personal computer through an interface.

Firmware
This means a program that controls the hardware of the PC7501 system by decoding the contents of communication with the emulator debugger M3T-PDxxF. This program is contained in EEPROM on the emulator PC7501's inside board.
At startup, the emulator debugger M3T-PDxxF checks the configuration of the emulator PC7501 and emulation probe M3xxxxTx-EPB or R0ExxxxxxEPB00, and downloads the appropriate firmware when it is necessary.

Target MCU
A target MCU means the MCU you are going to debug.

Target system
A target system means a user's application system using the MCU to be debugged.

#
In this user's manual, this symbol is used to show active LOW. (e.g. RESET#)

User Registration

When you install debugger software, a text file for user registration is created on your PC. Fill it in and email it to your local distributor. If you have replaced an emulator main unit or emulation probe, rewrite an emulator name and serial number in the text file you filled in earlier to register your new hardware products.

Your registered information is used for only after-sale services, and not for any other purposes. Without user registration, you will not be able to receive maintenance services such as a notification of field changes or trouble information. So be sure to carry out the user registration.

For more information about user registration, please contact your local distributor.

Chapter 1 Precautions for Safety

This chapter describes the handling precautions to be followed when using the emulator PC7501. For precautions on using the emulator debugger M3T-PDxxF and emulation probe M3xxxxTx-EPB or R0ExxxxxxEPB00, refer to each user's manual (or Online Help) of them.

1.1 Safety Symbols and Meanings

WARNING indicates a potentially dangerous situation that will cause death or heavy wound unless it is avoided.

CAUTION indicates a potentially dangerous situation that will cause a slight injury, a medium-degree injury or a property damage unless it is avoided.

In addition to the two above, the following are also used as appropriate.

△means WARNING or CAUTION.
Example:

CAUTION AGAINST AN ELECTRIC SHOCK

⃠means PROHIBITION.
Example:

DISASSEMBLY PROHIBITED

●means A FORCIBLE ACTION.
Example:

UNPLUG THE POWER CABLE FROM THE RECEPTACLE.

⚠ WARNING

Warnings for AC Power Supply:

- If the attached AC power cable does not fit the receptacle, do not alter the AC power cable and do not plug it forcibly. Failure to comply may cause electric shock and/or fire.
- Use an AC power cable which complies with the safety standard of the country.
- Do not touch the plug of the AC power cable when your hands are wet. This may cause electric shock.
- This product is connected signal ground with frame ground. If your developing product is transformless (not having isolation transformer of AC power), this may cause electric shock. Also, this may give an unrepairable damage to this product and your developing one.
- While developing, connect AC power of the product to commercial power through isolation transformer in order to avoid these dangers.
- If other equipment is connected to the same branch circuit care should be taken not to overload the circuit. Refer to nameplate for electrical ratings.

- When installing this equipment, insure that a reliable ground connection is maintained.

- If you smell a strange odor, hear an unusual sound, or see smoke coming from this product, then disconnect power immediately by unplugging the AC power cable from the outlet.
  Do not use this as it is because of the danger of electric shock and/or fire. In this case, contact your local distributor.

Warnings to Be Taken for This Product:

- Do not disassemble or modify this product. Personal injury due to electric shock may occur if this product is disassembled and modified.
- Make sure nothing falls into the cooling fan on the top panel, especially liquids, metal objects, or anything combustible.

Warning for Installation:

- Do not set this product in water or areas of high humidity. Make sure that the product does not get wet. Spilling water or some other liquid into the product may cause unrepairable damage.

Warning for Use Environment:

- This equipment is to be used in an environment with a maximum ambient temperature of 35°C. Care should be taken that this temperature is not exceeded.

⚠ CAUTION

Cautions for AC Adapter:

- Use only the AC adapter included in this product package.
- The included AC adapter is for PC7501. Do not use it for other product.
- Before installing this equipment or connecting it to other equipment, disconnect the AC power cable from its outlet to prevent injury or accident.
- The DC plug on the included AC adapter has the below polarity.

- The included AC adapter has no power supply switch. The AC adapter is always active while connecting the AC power cable. Check if the power is supplied by the LED of AC adapter.

Cautions to Be Taken for This Product:

- Use caution when handling this product. Be careful not to apply a mechanical shock.
- Do not touch the connector pins of the emulation probe and the interface connector pins directly with your hand.
- Do not pull the main unit by the probe of the emulation probe or the flexible cable which are connected to this product.
- Excessive flexing or force of the flexible cable for connecting this product to the emulation probe may break connector.
- Do not use inch-size screws for this equipment. The screws used in this equipment are all ISO type (meter-size) screws. When exchanging screws, use same type screws as equipped before.

Caution for AC Power Supply:

- When installing or connecting this product with other equipment, shut down AC power or disconnect the AC power cord from the equipment to prevent personal injury or damage to the equipment.

Caution for Installation:

- When in use do not place the emulator PC7501 on its side.

Caution for Communication Interface:

- Always make sure that the emulator PC7501's interface selection switch and the emulator debugger M3T-PDxxF's interface settings are matched.

Cautions to Be Taken for Disposal:

- Penalties may be applicable for incorrect disposal of this waste, in accordance with your national legislation.

European Union regulatory notices

Renesas development tools and products are directly covered by the European Union's Waste Electrical and Electronic Equipment, (WEEE), Directive 2002/96/EC. As a result, this equipment, including all accessories, must not be disposed of as household waste but through your locally recognized recycling or disposal schemes. As part of our commitment to environmental responsibility Renesas also offers to take back the equipment and has implemented a Tools Product Recycling Program for customers in Europe. This allows you to return equipment to Renesas for disposal through our approved Producer Compliance Scheme. To register for the program, click here "http://www.renesas.com/weee".

IMPORTANT

Note for Installation:

- The emulator PC7501 does not operate stand-alone. It must always be connected with the emulation probe M3xxxxTx-EPB or R0ExxxxxxEPB00 before you can execute the self-check or download firmware.

Notes for Difference between the Actual MCU and Emulator:

- Emulator operation differs from that of a mask MCU, as listed below:
  (1) Reset conditions
  (2) Initial values of internal resource data at power-on
  (3) Internal RAM and ROM capacities
  (4) A-D converter characteristics when using an emulation probe in the evaluation MCU method.
- Therefore, always be sure to evaluate your system with an evaluation MCU (OTP, EPROM or flash version). Also, be sure to perform board-mounted evaluation with CS (Commercial Sample) version MCU to make final confirmation of device operation before starting mask production.

Notes for Unusual Operation:

- Do not turn off the power when executing the self-check or downloading firmware. If the emulator PC7501 is powered off in the middle of a process, it will become unable to start up normally. In cases when the power is inadvertently shut off, re-execute the self-check or downloading.
- If the self-check does not terminate normally (except for target status errors), the emulator PC7501 can be faulty. In such a case, contact your local distributor.
- If the emulator PC7501 malfunctions due to external interference or some other causes, follow the steps given below.
  (1) Press the system reset switch located on the front panel of the emulator PC7501.
  (2) If the emulator PC7501 does not return to the normal operation despite the step (1) above, turn off the power supply switch of the emulator PC7501, and turn it on again.

Note for Downloading Firmware:

- Download firmware as described in "4.4 Downloading Firmware" (P.36) when:
  (1) you have set up the emulator PC7501 for the first time.
  (2) you have upgraded the firmware.
  (3) you have upgraded your emulator debugger.
  (4) you have changed your emulator debugger.
  (5) you have changed your emulation probe.

IMPORTANT

Note for LPT Parallel Interface:

- With the LPT parallel interface of the PC7501, not all host machines will work and are guaranteed. According to the specifications and settings of the host machine, some operation modes of the LPT parallel port cannot be used.

Notes for USB Interface:

- USB interface can not be used with a host machine running Windows 95 or Windows NT 4.0.
- With the USB interface of the PC7501, not all hardware (such as host machine, USB devices, USB hub) combinations will work and are guaranteed.

Note for LAN Interface:

- With the LAN interface of the PC7501, not all hardware (such as host machine, network devices) combinations will work and are guaranteed.

Note for Using Memory Expansion and Microprocessor Modes:

- When using this emulator in memory expansion mode or microprocessor mode, make sure that RDY# and HOLD# pins are all inactive. Otherwise, the PC7501 can not startup properly.

Note for Clock:

- When the CLOCK LED does not turn on, check the following conditions:
  (1) Immediately after starting up the emulator PC7501
  Make sure that the oscillation circuit in the emulator is oscillating normally.
  (2) Immediately after starting up the emulator debugger (when the setting in the Init dialog box has been done)
  Make sure that the oscillator that has been specified in the Init dialog box is working normally.

MEMO

Chapter 2 PC7501 System Configuration

2.1 Packing List

This product's packing list is shown below.

• Emulator main unit PC7501
• AC adapter (100- 240 V, 50/60 Hz)
• AC power cable (3 m)
• USB interface cable (1.9 m)
• LPT parallel interface cable (1.9 m, IEEE1284-A male to IEEE1284-C male)
• External trigger input/event output cable (50 cm)
• 160-pin flexible cable for connecting emulation probe (Preinstalled to PC7501)
• Converter board for connecting emulation probe M3T-FLX160-EPB (Preinstalled to PC7501)
• Oscillator board OSC-3 for 30 MHz (Preinstalled to PC7501)
• Debug Tools CD-ROM (English & Japanese)
• PC7501 User's Manual (English version)
• PC7501 User's Manual (Japanese version)

Note:
To our customers,
On April 1st, 2010, NEC Electronics Corporation merged with Renesas Technology Corp., and Renesas Electronics Corporation took over all the business of both companies. Therefore, although the old company name remains in this product, it is a valid Renesas Electronics product. We appreciate your understanding.

April 1st, 2010
Renesas Electronics Corporation

2.2 Outline of PC7501 System Configuration

The PC7501 system is configured with the following products:

(1) Host machine Personal computer (Separately available)
(2) Emulator PC7501
(3) Emulation probe M3xxxxTx-EPB or R0ExxxxxxEPB00 (Separately available)
(4) Emulator debugger M3T-PDxxF (included)
(5) AC adapter (included)

Figure 2.1 shows the PC7501 system configuration.

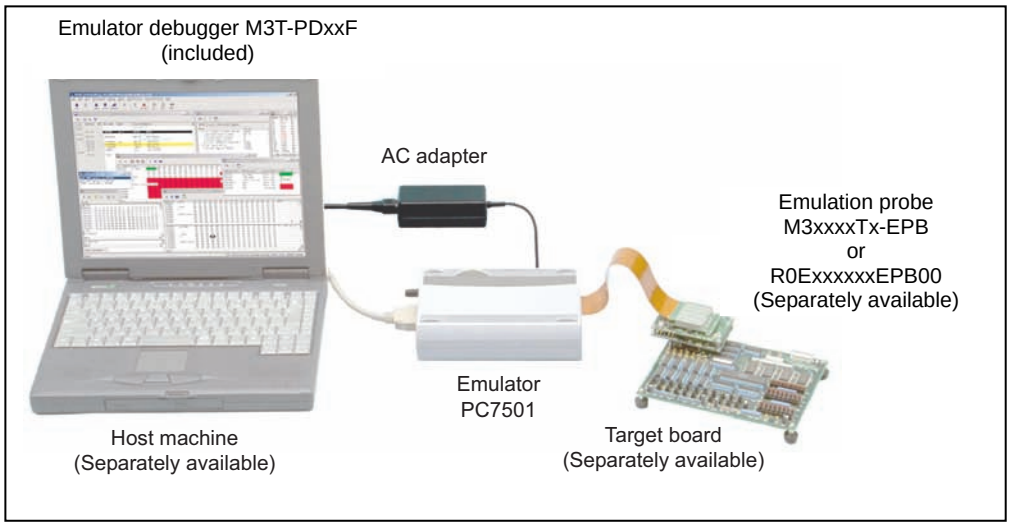

Figure 2.1 Emulator PC7501 system configuration

2.3 PC7501 System Configuration

2.3.1 Host Machine

The PC7501 system uses a personal computer (IBM PC/AT or compatible) as a host machine to control the emulator PC7501 by the emulator debugger M3T-PDxxF.

2.3.2 Emulator PC7501

The PC7501 is an emulator for Renesas MCUs. The emulator PC7501 has LED indicators on its upper panel to indicate the status of the target MCU and the conditions of the emulator. The emulator PC7501 is controlled by the emulator debugger M3T-PDxxF running on the host machine. It is connected to the host machine via a LAN interface, USB interface or LPT parallel interface.

2.3.3 Emulation Probe M3xxxxTx-EPB or R0ExxxxxxEPB00

The emulation probe is available for each family, series or type of MCUs used. This emulation probe is connected directly to the emulator PC7501 by a flexible cable.

2.3.4 Emulator Debugger M3T-PDxxF

Emulator debugger M3T-PDxxF means a software tool, M3T-PDxxF for the emulator that runs on a Windows-based personal computer.

Note on Firmware

You will need to download firmware when:

(1) You have set up the emulator PC7501 for the first time.
(2) You have upgraded the firmware.
(3) You have upgraded your emulator debugger.
(4) You have changed your emulator debugger.
(5) You have changed your emulation probe.

For details on downloading firmware, refer to "4.4 Downloading Firmware" (P.36)

2.4 Specifications

Table 2.1 lists the specifications of the emulator PC7501.

Table 2.1 Specifications

Supported MCUs	M16C Family and R8C Family (32/16-bit or 16-bit)
Max. operating clock frequency	66.7 MHz *1
Emulation memory	The default is 4 MB *2
Software break	64 points
Hardware break	16 points *3 (Execution address/Bus detection/Interrupt/External trigger signal)
Hardware break condition	- AND/OR/AND (same time)/State transition - Pass count: 255 times
Exception event detection	Access protect
Real-time trace	- 256K cycles - Trace data: Bus, external trigger, and time stamp - Five trace modes: Break/Before/About/After/Full - Can be recorded ON/OFF by events
Real-time RAM monitor	- 4,096 bytes (256 bytes x 16 blocks) - Data/Last access result
Execution time measurement	- Execution time between program start to stop. - Maximum/minimum/average execution time and pass count of specified four zones. - Count clock: Equal to MCU Clock or 16 MHz
C0 coverage	8,192 KB (256 KB x 32 blocks)
External trigger input/event output	External trigger input (MCU-dependent-voltage CMOS level x8) or event output (break x1, event x7)
Host machine interface	- LPT parallel (ECP, EPP, Byte/compatibility and Nibble/compatibility modes) - USB (USB 1.1, full-speed) - LAN (10BASE-T)
Connection to the target system	By way of an emulation probe (optional) (For details, see emulation probe data sheets.)
AC supply voltage for emulator unit	Supplied from an included AC adapter (100 - 240 V, 50/60 Hz)
Power consumption	48 W maximum
External dimensions *4	Width: 433 mm, Depth: 140 mm, Height: 58 mm
Weight	740 g
Operating environmental conditions	- Temperature: 5° to 35°C - Humidity: 20% to 80% (non-condensing) - Dust and dirt: General office environment
Storage environmental conditions	- Temperature: -10° to 60°C - Humidity: 0% to 90% (non-condensing) - Dust and dirt: General office environment

*1 Target-MCU-dependent. (For details, see an emulation probe user's manual.)
*2 Available memory and the required wait states depend on the target MCU. (For details, see an emulation probe user's manual.)
*3 The number of user-settable hardware break points depends on the specifications of the emulator debugger M3T-PDxxF.
*4 For details of the external dimensions, refer to "7.1 External Dimensions of the Emulator PC7501" (P.45).

Chapter 3 External View

3.1 Names and Functions of Parts on the Upper Panel

Figure 3.1 shows the name and function of each switch and indicator on the upper panel of the emulator PC7501.

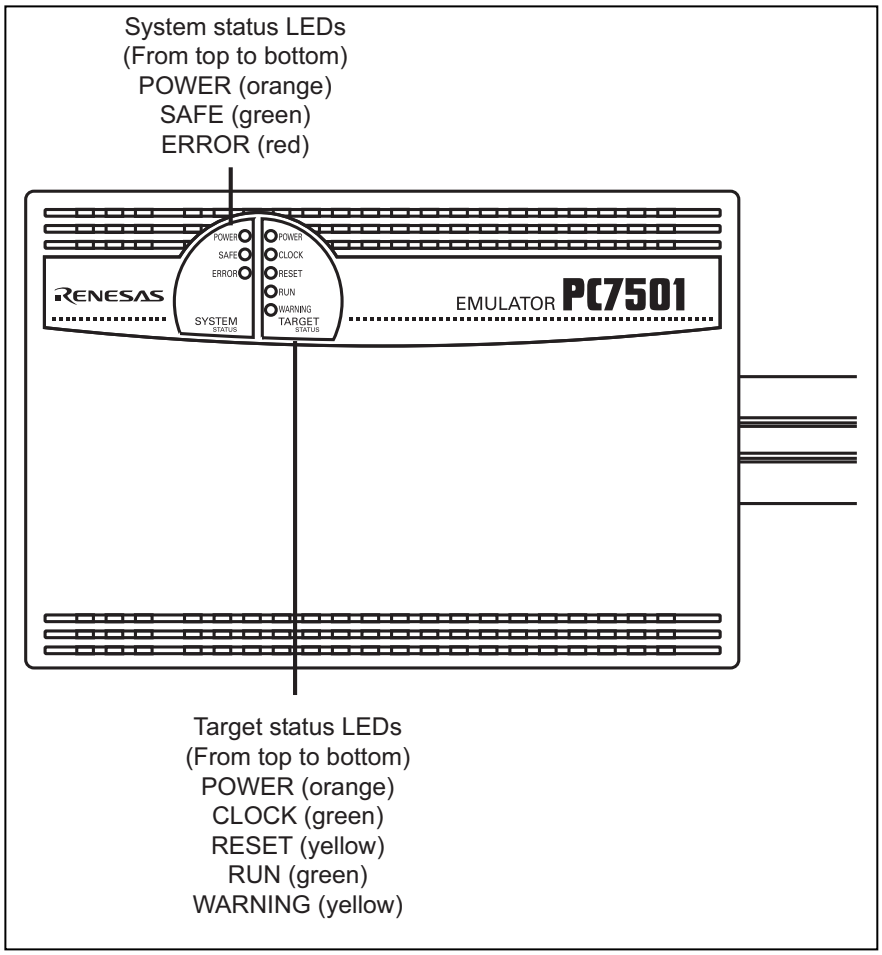

Figure 3.1 Front panel of the emulator PC7501

3.1.1 System Status LEDs

The system status LEDs indicate the emulator PC7501's power supply, firmware operating status, etc. Table 3.1 lists the definition of each system status LED.

Table 3.1 Definition of system status LEDs

Name	ON/OFF	Meaning
POWER	ON	Emulator PC7501 power supply is turned on.
	OFF	Emulator PC7501 power supply is turned off.
SAFE	ON	The PC7501 system is operating normally.
	Blinking	1. The self-check is under way. 2. Firmware downloaded is written into EEPROM. 3. If SAFE is lit when ERROR LED is lit or blinking, it means that the self-check cannot be executed because of the target system operating error.
	OFF	The PC7501 system is faulty (system status error).
ERROR	ON	The PC7501 system is faulty (system status error).
	Blinking	1. Firmware is being downloaded. 2. If SAFE and ERROR LED are lit at a time or alternately, it means that the self-check cannot be executed because of a target system operating error.
	OFF	The PC7501 system is operating normally.

3.1.2 Target Status LEDs

The target status LEDs typically indicate the target MCU's power supply and operating status. Table 3.2 lists the definition of each target status LED.

Table 3.2 Definition of target status LEDs

Name	ON/OFF	Meaning
POWER	ON	Power is supplied to target board.
	OFF	Power is not supplied to target board.
CLOCK	ON	Target MCU clock is oscillating.
	OFF	Target MCU clock is not oscillating.
RESET	ON	Target MCU is reset.
	OFF	Target MCU is not reset.
RUN	ON	Target program is being executed.
	OFF	Target program has been halted.
WARNING	-	The display varies according to the emulation probe. For the LED display, refer to the user's manual of each emulation probe.

The status of LEDs on the upper panel when the PC7501 emulator system has been started up normally is shown in Figure 3.2 below. Check this when you actually start up the emulator system.

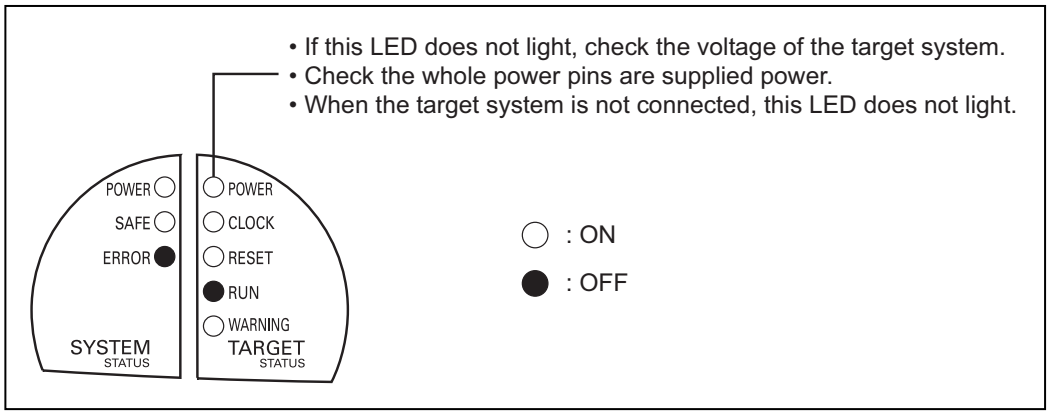

Figure 3.2 LED display when system has started up normally

IMPORTANT

Note for Using Memory Expansion and Microprocessor Modes:

- When using this emulator in memory expansion mode or microprocessor mode, make sure that RDY# and HOLD# pins are all inactive. Otherwise, the emulator cannot startup properly.

Note for Clock:

- When the CLOCK LED does not blink, check the following conditions:
  (1) Immediately after starting up the emulator PC7501
  Make sure that the oscillation circuit in the emulator is oscillating normally.
  (2) Immediately after starting up the emulator debugger (when the setting in the Init dialog box has been done)
  Make sure that the oscillator that has been specified in the Init dialog box is working normally.

3.2 Names and Functions of Parts on the Rear Panel

Figure 3.3 shows the name and function of each switch and connector mounted on the rear panel of the emulator PC7501.

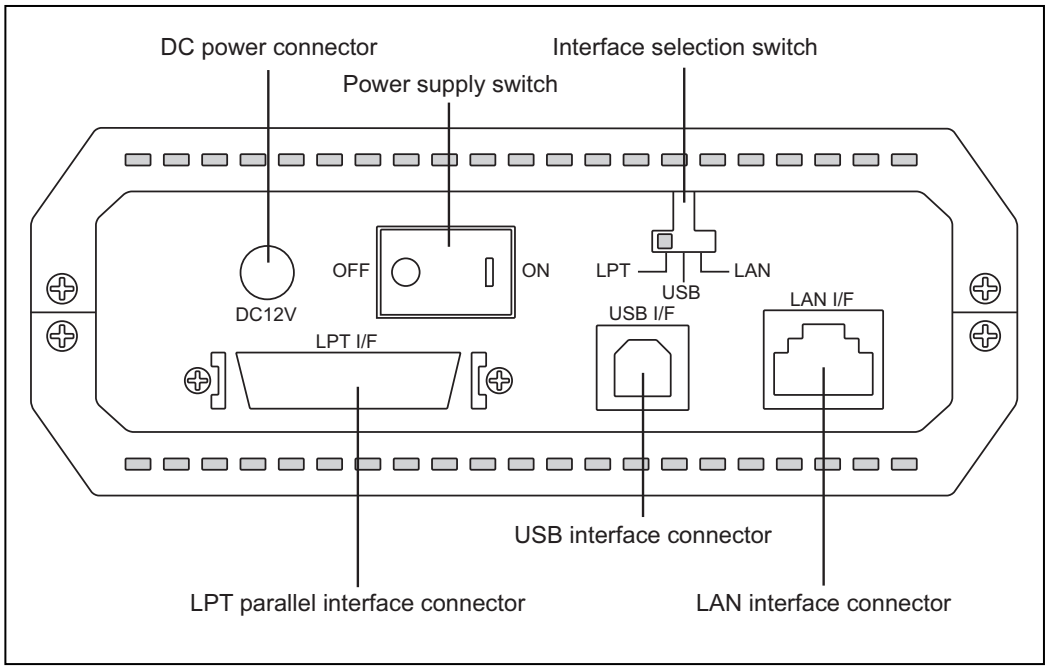

Figure 3.3 Rear panel of the emulator PC7501

3.2.1 Interface Selection Switch

The emulator PC7501 allows you to specify one of three types of interfaces for communication with the host machine as listed below.

(1) LPT parallel interface
(2) USB interface
(3) LAN interface

The interface selection switch is used to specify the type of communication interface available. The setting of the interface selection switch is checked to see the available type after the emulator PC7501 is powered on or you press the system reset switch.

Figure 3.4 shows the relationship between the interface selection switch settings and the interfaces recognized by the emulator PC7501.

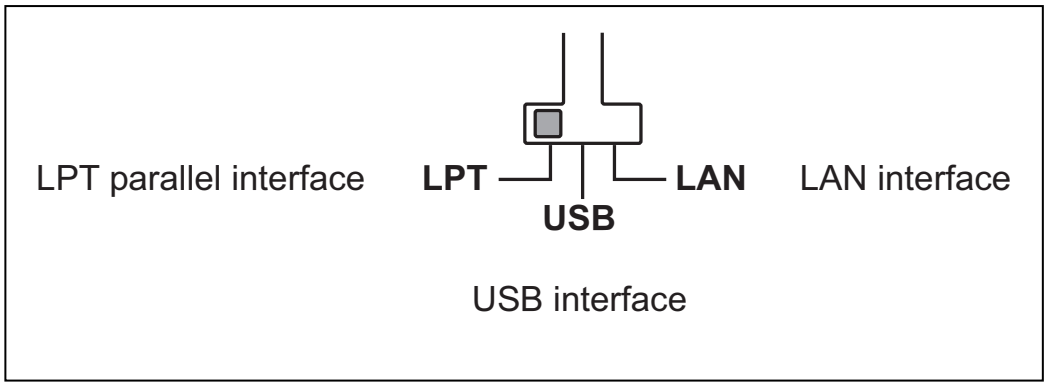

Figure 3.4 Relationship between interface selection switch and interfaces

3.2.2 LPT Parallel Interface Connector

The parallel interface cable is included. The LPT parallel interface connector is an IEEE 1284-C (36-pin half-pitch) connector.

3.2.3 USB Interface Connector

The USB interface connector used for the emulator PC7501 is a USB interface cable (included) compliant with USB 1.1.

3.2.4 LAN Interface Connector

The LAN interface connector used for the emulator PC7501 is a 10BASE-T cable. As this product package does not contain a 10BASE-T cable, get it separately.
To connect the emulator PC7501 directly to the host machine, use a cross cable. And, to connect the emulator PC7501 to the host machine via a HUB, use a straight cable.

3.2.5 Power Supply Switch

The power switch of the emulator PC7501 is used to turn the power on and off. Push the switch to the right position (facing the rear panel) to turn on; push the switch to the left position to turn off.

3.2.6 DC Power Connector

The DC power connector connects the DC output connector of the AC adapter.

3.3 Names and Functions of Parts on the Front Panel

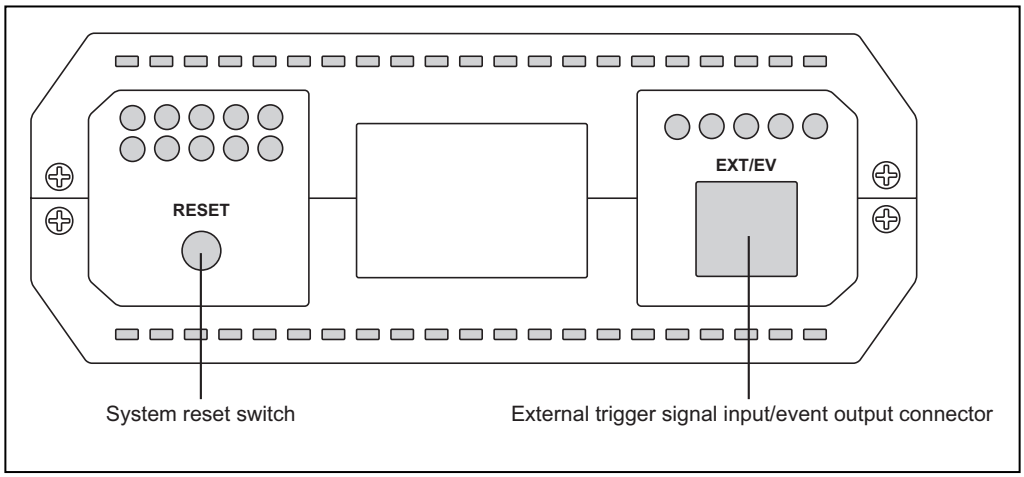

Figure 3.5 Front panel of the emulator PC7501

3.3.1 System Reset Switch

The system reset switch has dual functions. Not only does it initialize the target MCU, but it also establishes maintenance mode to execute the self-check, etc. when pressed within two seconds after power-on.

If you do not press the switch within two seconds after power-on, the emulator PC7501 and the target MCU are initialized directly, and ready to accept command input for the emulator debugger M3T-PDxxF. Table 3.3 lists the functions of the system reset switch.

Table 3.3 Functions of the system reset switch

Emulator PC7501 Status	Function
When switch is pressed within two seconds after power-on	Switched to maintenance mode. Then, as you press the switch a second time, the self-check is executed. After execution of the self-check, the system waits for command input from the emulator debugger M3T-PDxxF. * When the emulator PC7501 is in maintenance mode and the emulator debugger M3T-PDxxF is started up, a dialog box prompting to download firmware is displayed. Download the latest firmware file as needed.
When switch is pressed during target program execution	Target MCU is initialized after forcibly halting execution of the target program.
When the emulator debugger M3T-PDxxF is waiting for command input	Target MCU is initialized.

3.3.2 External Trigger Signal Input/Event Output Connectors

For the external trigger signal input/event output connector, insert the external trigger signal input/ event output cable shown in Figure 3.6. The external trigger signal input/event output cable is a 9-pin cable, inputs the external trigger signal, and outputs the break signal and event signal.

The external trigger signal input/event output signal is input/output at CMOS (LVCC3245) level.
Break signals are held low when the break conditions are satisfied. And, event signals are held high while events 1 through 6 specified as breakpoints are established.

Table 3.4 gives pin assignments of the external trigger signal input/event output connectors.

Table 3.4 Pin assignments of external trigger signal input/event output connectors

Pin No.	Signal	Cable Color	Pin No.	Signal	Cable Color
1	EXT0/EV0: input/output	White	6	EXT5/EV5: input/output	Green
2	EXT1/EV1: input/output	Brown	7	EXT6/EV6: input/output	Blue
3	EXT2/EV2: input/output	Red	8	EXT7/BRKOUT: input/output	Purple
4	EXT3/EV3: input/output	Orange	9	GND	Black
5	EXT4/EV4: input/output	Yellow	-	-	-

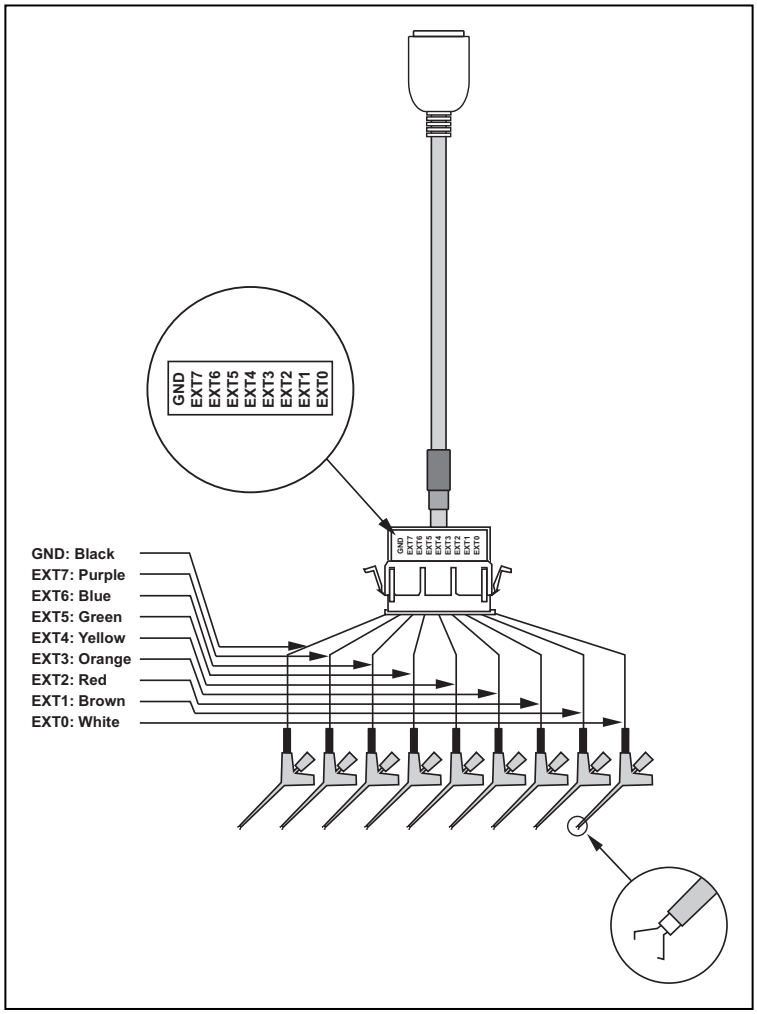

Figure 3.6 External trigger signal input/event output cable

Chapter 4 Setup

This chapter describes how to connect the emulator PC7501 with your host machine and emulation probe M3xxxxTx-EPB or R0ExxxxxxEPB00. For details on how to install the emulator debugger M3T-PDxxF, refer to each user's manual (or Online Help) of them. This chapter also explains the emulator PC7501's self-check and the procedure for setting up its interface. Before you run the self-check, you must have the emulation probe.

IMPORTANT
Before making connections, be sure to turn OFF the power to the emulator PC7501 and the host machine.

4.1 Connecting AC Adapter

The power is supplied from AC adapter to the emulator PC7501. Here following explains how to connect the AC adapter.

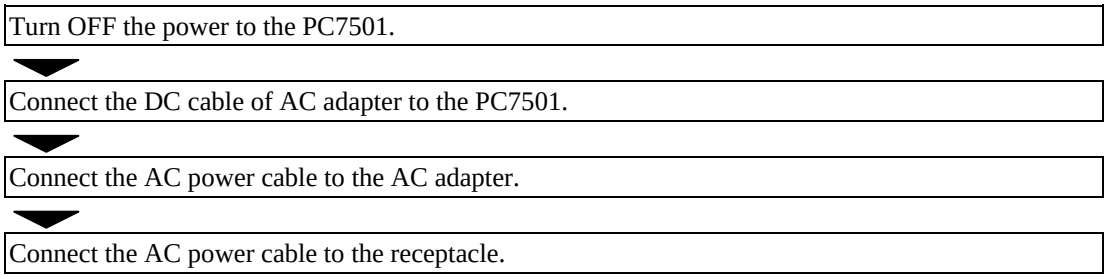

4.2 Connecting Host Machine

When connecting the emulator PC7501 to a host machine, you can choose your desired interface from LPT parallel interface, USB interface and LAN interface. Use the interface selection switch on the emulator PC7501's rear panel to specify your desired interface.

Figure 4.1 shows the outline to connect each interface cable.

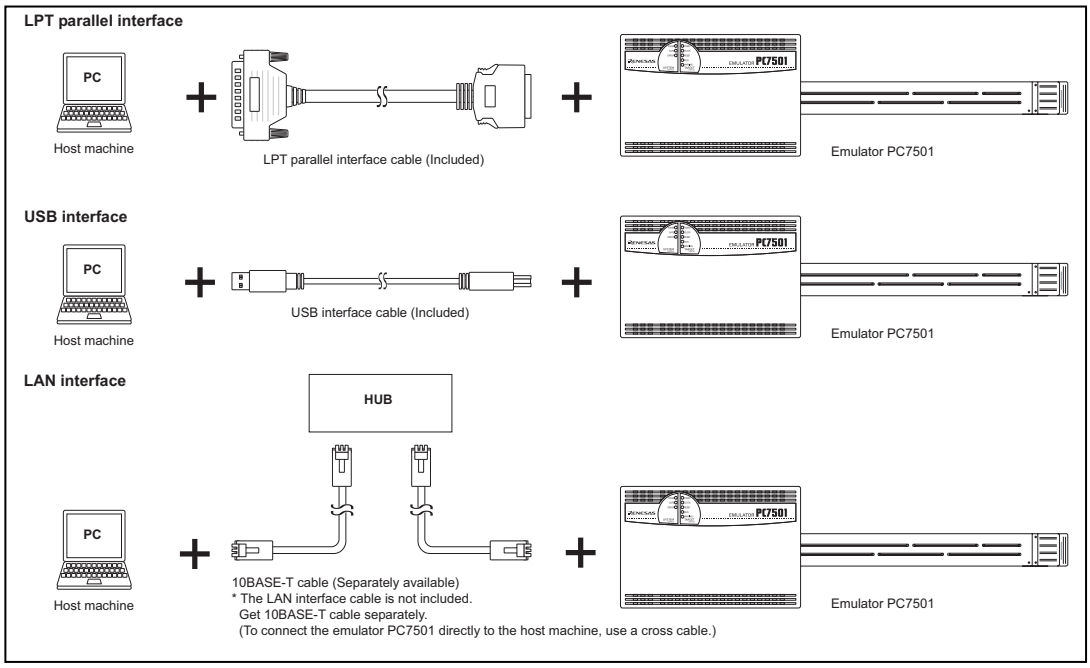

Figure 4.1 Outline for interface cable connections

4.2.1 Connecting by LPT Parallel Interface

The procedure to set up your system using the LPT parallel interface is shown below.

Turn OFF the power to the host machine and emulator PC7501.

↓

Set the interface selection switch on the rear panel to "LPT."
⇨ 3.2.1 Interface Selection Switch (P.22)

↓

Connect the LPT parallel interface cable to the printer port of the host machine.
⇨ Figure 4.2 Connecting the LPT parallel interface cable (host machine side) (P.28)

↓

Fasten the cable to the host machine using the screws of the cable.

↓

Connect the cable to the LPT parallel interface connector on the emulator PC7501.
⇨ Figure 4.3 Connecting the LPT parallel interface cable (emulator PC7501 side) (P.28)

↓

Connect the emulation probe M3xxxxTx-EPB or R0ExxxxxxEPB00 to the connector on the emulator PC7501.
⇨ 4.3 Connecting Emulation Probe M3xxxxTx-EPB or R0ExxxxxxEPB00 (P.35)

↓

Connect the emulation probe M3xxxxTx-EPB or R0ExxxxxxEPB00 and the target system.
⇨ See the user's manual of the emulation probe

↓

Turn ON the power to the host machine and then turn ON the power of the PC7501 and the target system as simultaneously as possible.

Figure 4.2 Connecting the LPT parallel interface cable (host machine side)

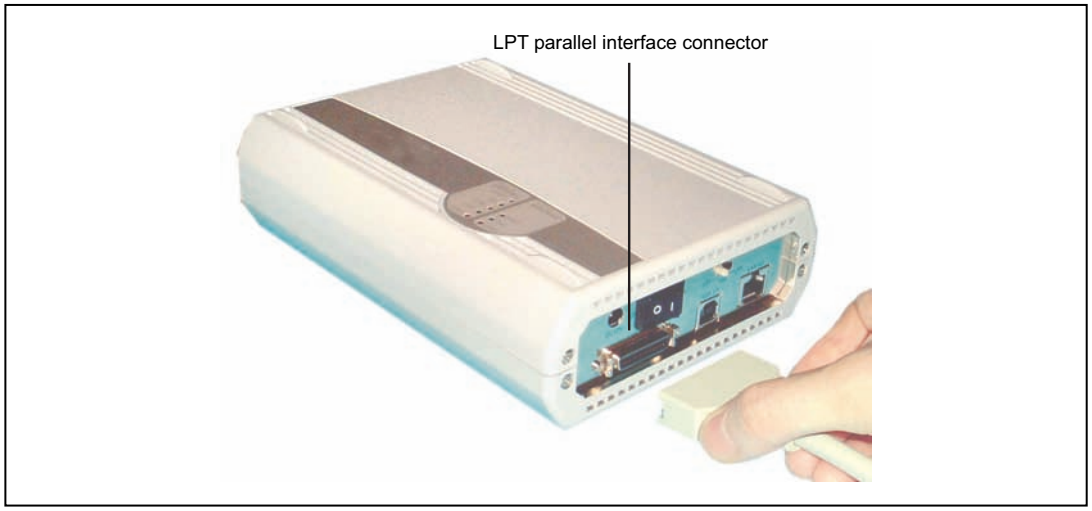

Figure 4.3 Connecting the LPT parallel interface cable (emulator PC7501 side)

4.2.2 Connecting by USB Interface

IMPORTANT
We do not ensure the operation in every combination with host machine, USB device, and USB hub.

The procedure to set up your system using the USB interface is shown below.

Turn OFF the power to the emulator PC7501.

↓

Set the interface selection switch on the rear panel to "USB."
⇨ 3.2.1 Interface Selection Switch (P.22)

↓

Connect the USB interface cable to the USB port of the host machine.
⇨ Figure 4.4 Connecting the USB interface cable (host machine side) (P.30)

↓

Connect the cable to the USB interface connector on the emulator PC7501.
⇨ Figure 4.5 Connecting the USB interface cable (emulator PC7501 side) (P.30)

↓

Connect the emulation probe M3xxxxTx-EPB or R0ExxxxxxEPB00 to the connector on the emulator PC7501.
⇨ 4.3 Connecting Emulation Probe M3xxxxTx-EPB or R0ExxxxxxEPB00 (P.35)

↓

Connect the emulation probe M3xxxxTx-EPB or R0ExxxxxxEPB00 and the target system.
⇨ See the user's manual of the emulation probe

↓

Turn ON the power to the host machine and then turn ON the power of the PC7501 and the target system as simultaneously as possible.

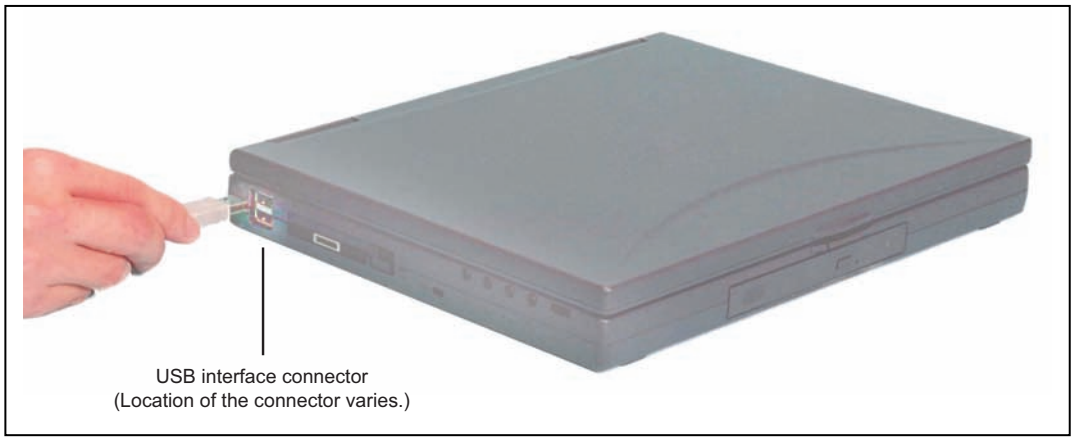

Figure 4.4 Connecting the USB interface cable (host machine side)

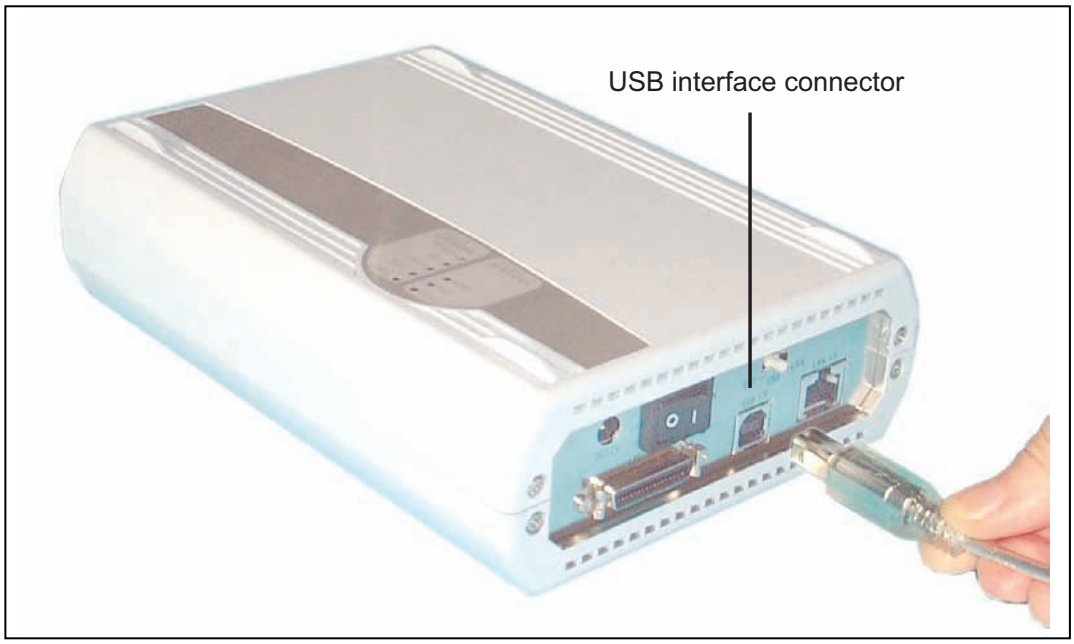

Figure 4.5 Connecting the USB interface cable (emulator PC7501 side)

4.2.3 Connecting by LAN Interface

To connect the emulator PC7501 by use of a LAN interface, you need to register some network information such as an IP address, a subnet mask, a port number, etc. in the emulator PC7501 in addition to the ordinary setup information. There are following two ways to setup and to register the network information.

- Using the emulator debugger M3T-PDxxF
- Using the utility SETIP.EXE

If you incorporate the host machine and the PC7501 in separate networks, read "Incorporating the emulator PC7501 in a different network" (P.33) too.

(1) Using the emulator debugger M3T-PDxxF

This method can be executed with all the OS's on which the M3T-PDxxF runs.

First, use a USB or an LPT parallel interface other than LAN interface to start up the emulator PC7501 and register the network information from the emulator debugger M3T-PDxxF. When the registration of the network information in the emulator PC7501 is completed, you can connect the emulator debugger M3T-PDxxF to the emulator PC7501 by use of the LAN interface.

The setup procedure is as follows.

Connect over a LPT parallel interface as explained in "4.2.1 Connecting by LPT Parallel Interface" (P.27) or USB interface as explained in "4.2.2 Connecting by USB Interface" (P.29), according to the equipment status of the host machine OS and communication interface.
If the environment allows you to use both USB and LPT parallel, it is recommended to select the LPT parallel interface.

▼

Register network information in the PC7501 as described in "Setting of the LAN Interface" of the emulator debugger M3T-PDxxF user's manual (or Online Help).

▼

Quit the emulator debugger M3T-PDxxF.

▼

Turn power to the host machine, PC7501 and target system OFF.

▼

Disconnect the LPT parallel or USB interface cable used earlier from the PC7501 and host machine.

▼

Switch the interface selection switch on the rear panel to "LAN."

▼

Connect a 10BASE-T cable to the LAN interface connector of the PC7501.

▼

Turn ON the power to the host machine and then turn ON the power of the PC7501 and the target system as simultaneously as possible.

▼

Start up the emulator debugger M3T-PDxxF. (Select LAN on the MCU tab of the Init dialog box.)

IMPORTANT
If the LAN interface is used as the PC7501 communication interface, it is necessary to acquire an IP address of the PC7501. For details, contact your network administrator.

IMPORTANT
To register network information, shut power to the PC7501 OFF and restart. The registered information is activated by restarting the PC7501.

IMPORTANT
The PC7501 cannot communicate with more than one host machine at a time. It communicates with the first host machine to which the PC7501 is connected.

IMPORTANT
The initial values of network information for the PC7501 are as follows.

IP address: 39.40.41.44 Subnet mask: 255.255.255.255
Port number: 7500 Gateway: 255.255.255.255 (not in use)

(2) Using the SETIP.EXE

If you use the emulator debugger M3T-PDxxF on Windows 95 or Windows NT 4.0, the SETIP.EXE cannot be used. In this case, register the network information by using the emulator debugger M3T-PDxxF referring "(1) Using the emulator debugger M3T-PDxxF" (P.31).

Use the utility software SETIP.EXE, which is accompanied by the emulator debugger M3T-PDxxF, to register the network information of the emulator PC7501 by use of the LAN interface.
When the registration of the network information in the emulator PC7501 is completed, you can connect the emulator debugger M3T-PDxxF to the emulator PC7501 by use of the LAN interface.

The setup procedure is as follows.

Turn power to the host machine, PC7501 and target system OFF.

↓

Connect a 10BASE-T cable to the LAN interface connector of the PC7501.

↓

Switch the interface selection switch on the rear panel to "LAN."

↓

Turn ON the power to the host machine and then turn ON the power of the PC7501 and the target system as simultaneously as possible.

↓

Start up SETIP.EXE and register network information in the PC7501 as specified in "Setting of the LAN Interface using the SETIP.EXE" of the emulator debugger M3T-PDxxF user's manual (or Online Help).

↓

Turn power to the PC7501 and target system OFF.

↓

Turn ON the power of the PC7501 and the target system as simultaneously as possible.

↓

Start up the emulator debugger M3T-PDxxF (select LAN on the MCU tab of the Init dialog box, the IP address and port number). However, it is not necessary to set the IP address of the gateway.

IMPORTANT
If you have already used IP address 39.40.41.44 in a local area network, you cannot use this procedure. Carry out "(1) Using the emulator debugger M3T-PDxxF" (P.31).

IMPORTANT
If the LAN interface is used as the PC7501 communication interface, it is necessary to acquire an IP address of the PC7501. For details, contact your network administrator.

IMPORTANT
To register network information, shut power to the PC7501 OFF and restart. The registered information is activated by restarting the PC7501.

IMPORTANT
The PC7501 cannot communicate with more than one host machine at a time. It communicates with the first host machine to which the PC7501 is connected.

IMPORTANT
The initial values of network information for the PC7501 are as follows.
IP address: 39.40.41.44 Subnet mask: 255.255.255.255
Port number: 7500 Gateway: 255.255.255.255 (not in use)

IMPORTANT
SETIP.EXE detects the PC7501 at IP address 39.40.41.44 and port number 7500. If the IP address is changed, you cannot register network information using the SETIP.EXE.

IMPORTANT
SETIP.EXE does not detect a PC7501 on another network.

IMPORTANT
When SETIP.EXE detects the PC7501, it temporarily rewrites the network table of the host machine.

Incorporating the Emulator PC7501 in a Different Network

In incorporating the emulator PC7501 in a network that does not include the host machine, you need to register the IP address of the gateway from the network in which the emulator PC7501 is incorporated to the network in which the host machine is incorporated. You register the IP address of the gateway by means of either step 1 described in "(1) Using the emulator debugger M3T-PDxxF" (P.31) or step 5 described in "(2) Using the SETIP.EXE" (P.32).

After you finished registering the network information by use of the host machine in which the emulator debugger M3T-PDxxF is installed, incorporate the emulator PC7501 in the network intended. In case of the following network construction, register 192.168.2.254 as the IP address of the gateway.

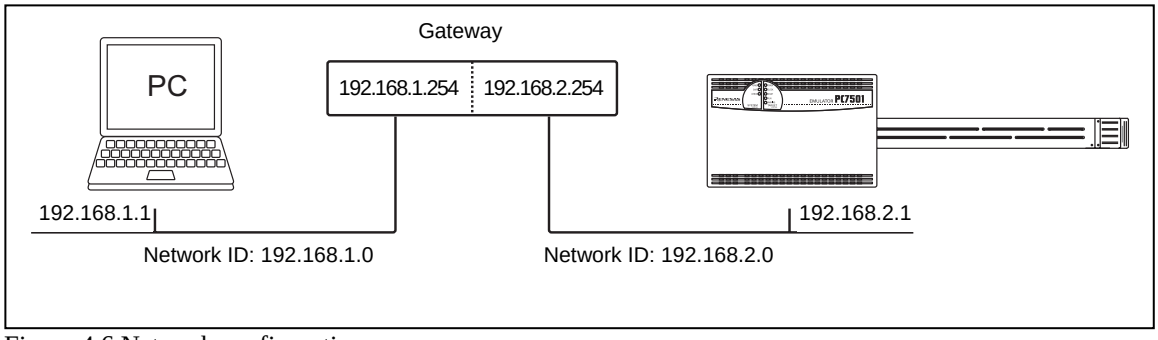

Figure 4.6 Network configuration

Note
The easiest way to change the registered network information is to use the emulator debugger M3T-PDxxF's Init dialog box. The emulator debugger M3T-PDxxF can be used similarly to change network information prior to moving the PC7501 to another network.

Note
The PC7501 can download firmware over a LAN interface.

Note
Connecting multiple PC7501's to the same network without registering network information can cause registration errors. Therefore, it is recommended to connect them sequentially one at a time.

Note
The emulator PC7501 communicates with the host machine using the TCP.

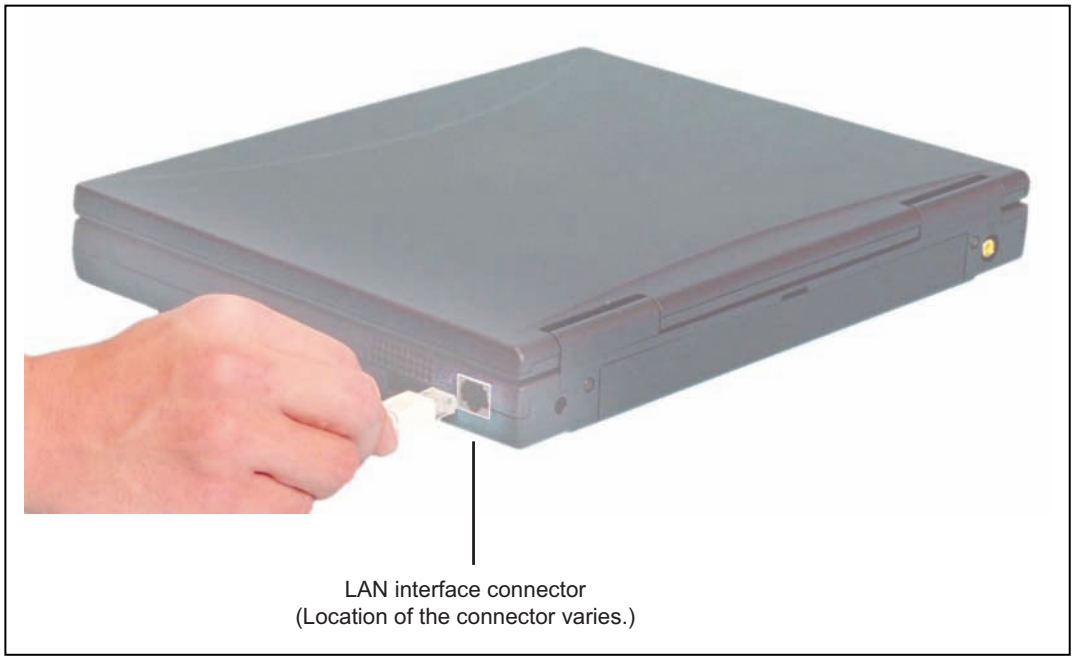

Figure 4.7 Connecting the LAN interface cable (host machine side)

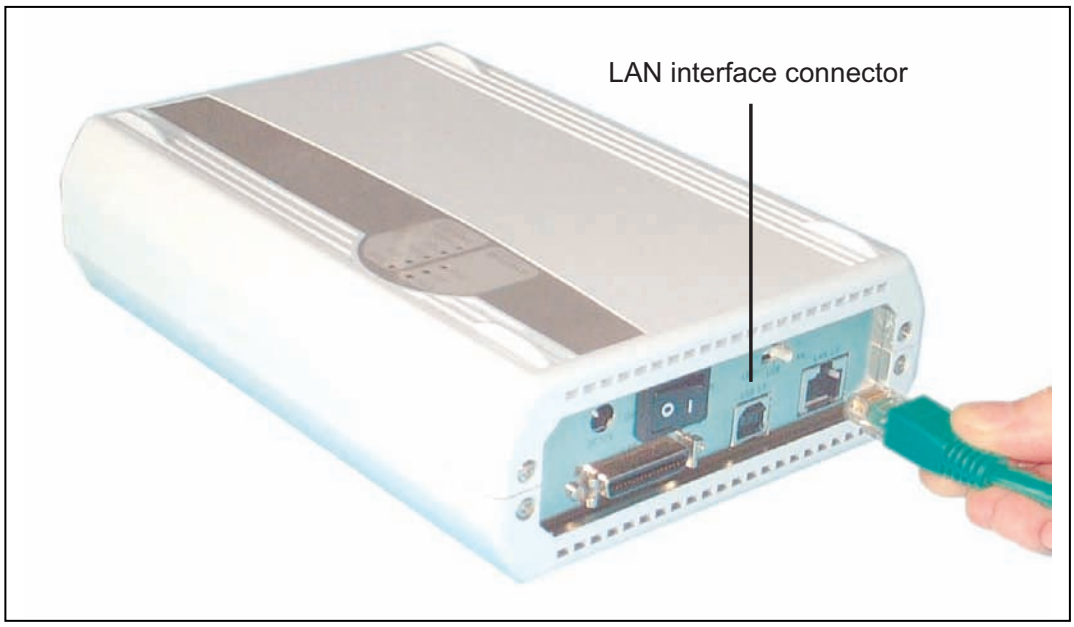

Figure 4.8 Connecting the LAN interface cable (emulator PC7501 side)

4.3 Connecting Emulation Probe M3xxxxTx-EPB or R0ExxxxxxEPB00

The procedure for connecting the emulation probe to the emulator PC7501 is shown below.

Turn OFF the power to the emulator PC7501.

▼

Connect the converter board M3T-FLX160-EPB of the PC7501 to the emulation probe M3xxxxTx-EPB or R0ExxxxxxEPB00.
- ⇨ Figure 4.9 Connecting the emulation probe (below)
- ⇨ For details, refer to the user's manual of emulation probe.

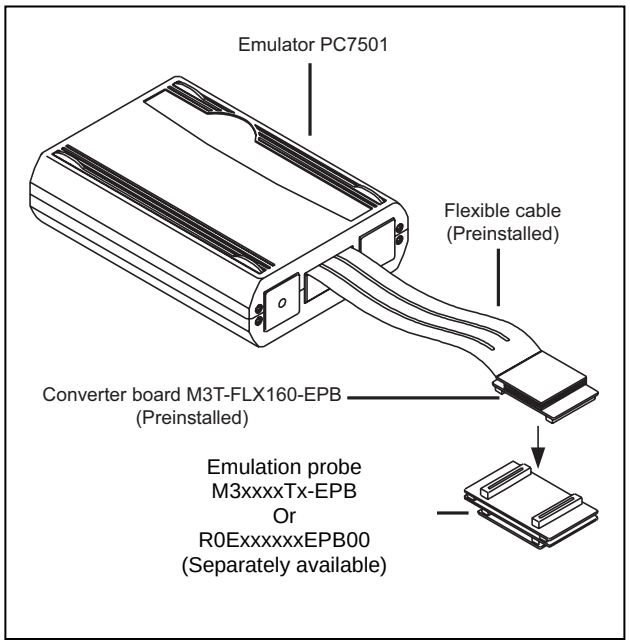

Figure 4.9 Connecting the emulation probe

4.4 Downloading Firmware

4.4.1 When It is Necessary to Download Firmware

It is necessary to download firmware when:

(1) You have set up the emulator PC7501 for the first time.
(2) You have upgraded the firmware.
(3) You have upgraded your emulator debugger.
(4) You have changed your emulator debugger.
(5) You have changed your emulation probe.

If downloading the firmware is not completed in the cases below, redownload the firmware as described in 4.4.2.

• When the power is unexpectedly shut down during a download from the emulator debugger
• When a communications interface cable is unexpectedly pulled out

4.4.2 Downloading the Firmware in Maintenance Mode

Download the firmware in maintenance mode as explained here following. The target system must not be connected when downloading the firmware.

Set the interface selection switch on the rear panel to "LPT."

Connect the LPT parallel interface cable to the emulator PC7501 and the host machine.

Within 2 seconds of activating power to the emulator PC7501, press the RESET switch on the front panel.

Switched to maintenance mode, the SAFE SYSTEM STATUS LED begins to flash.

Start up the emulator debugger.

When the Init dialog box setup is complete, the dialog, which urges to download the firmware, will appear. Download the firmware following messages. Required time for downloading the firmware is about 90 seconds.

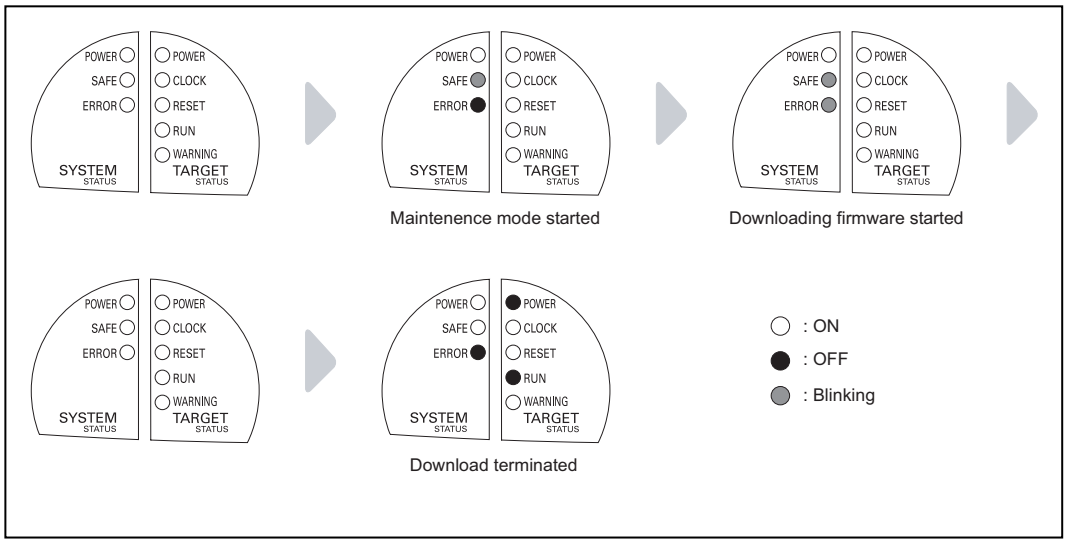

Figure 4.10 Downloading the firmware in maintenance mode

4.5 Self-check

IMPORTANT
The self-check is a function to check the memory and other conditions of the emulator PC7501's internal circuit boards. This function can only be executed after the emulator PC7501 is connected to an emulation probe M3xxxxTx-EPB or R0ExxxxxxEPB00.

IMPORTANT
When executing the self-check, be sure to disconnect the target system.

IMPORTANT
Before executing the self-check, you may need to change settings of the emulation probe, so read the user's manual of the emulation probe.

Figure 4.11 shows a transition of LEDs' on/off conditions during the self-check. Required time for the self-check is about 30 seconds.

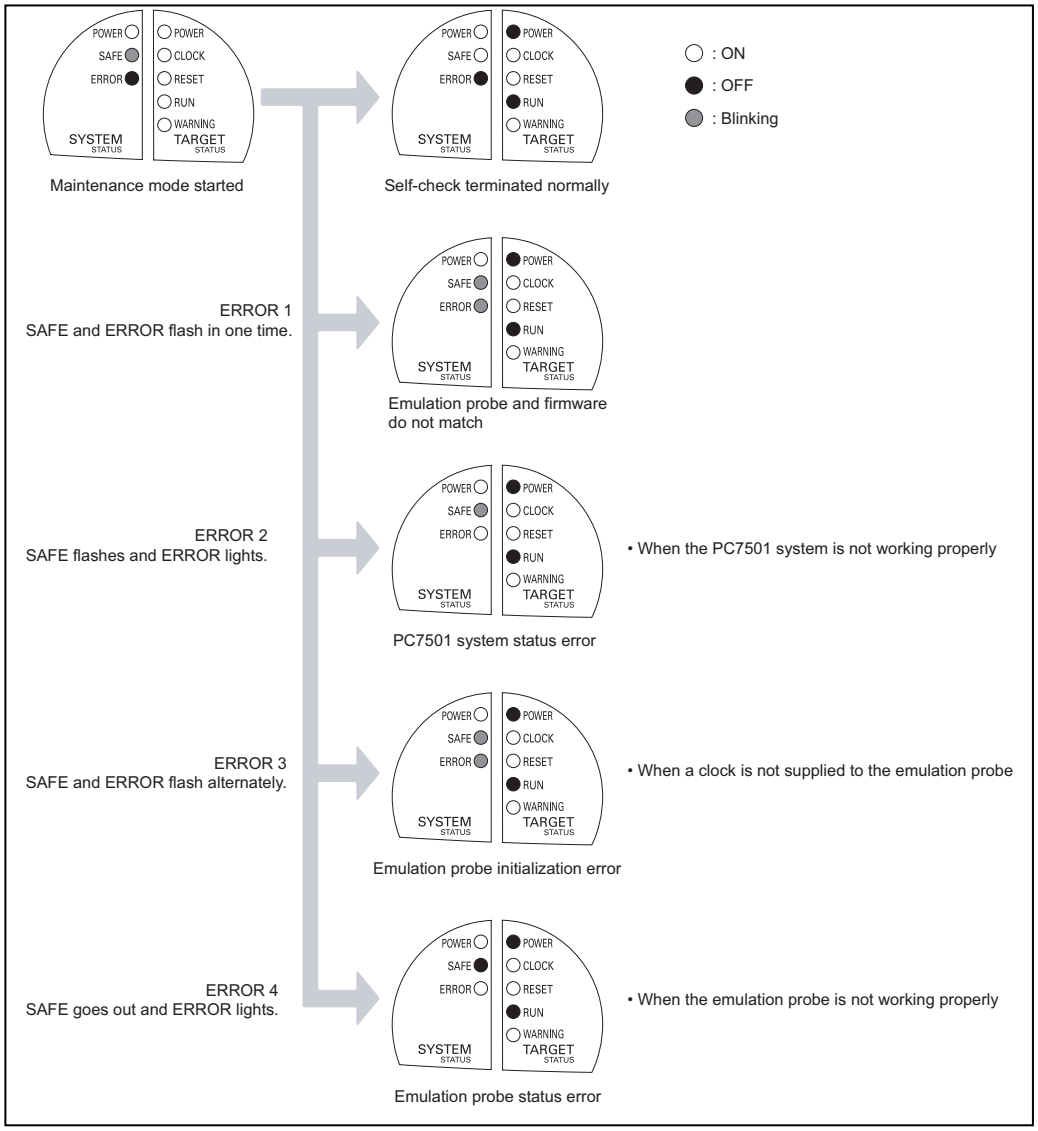

Figure 4.11 LED display during the self-check

MEMO

Chapter 5 Troubleshooting

5.1 Emulator PC7501 Cannot Be Powered On

- ☐ Is the AC power cable of the PC7501 firmly plugged into the receptacle?
- ☐ Is the LED of the included AC adapter is lit?
- ☐ Is the AC supply voltage within the range specified for the emulator PC7501?
  ⇨ Table 2.1 Specifications (P.18)

5.2 Interface Connection Error

When an interface connection error occurs, check the following.

5.2.1 LPT Parallel Interface

- ☐ Is the interface selection switch on the rear panel of the PC7501 set to "LPT"?
  ⇨ 3.2.1 Interface Selection Switch (P.22)
- ☐ Is the LPT parallel interface cable connected correctly to both the PC7501 and host machine?
  ⇨ 4.2.1 Connecting by LPT Parallel Interface (P.27)
- ☐ Is the interface setting of the emulator debugger M3T-PDxxF set for the LPT parallel interface?
- ☐ The interface setting of the emulator debugger M3T-PDxxF is specified by Init dialog box. Recheck the setting.
- ☐ Are the Type and I/O address for the LPT parallel interface of the emulator debugger M3T-PDxxF corresponding to the host machine?

5.2.2 USB Interface

- ☐ The USB interface cannot be used with Windows 95 or Windows NT 4.0.
- ☐ By the device manager, check the USB driver (musbdrv.sys) is recognized by the host machine.
- ☐ Is the PC7501 interface selection switch on the rear panel of the PC7501 set to "USB"?
  ⇨ 3.2.1 Interface Selection Switch (P.22)
- ☐ Is the USB interface cable connected correctly to both the PC7501 and host machine?
  ⇨ 4.2.2 Connecting by USB Interface (P.29)
- ☐ Is the interface setting of the emulator debugger M3T-PDxxF set for the USB interface?
- ☐ The interface setting of the emulator debugger M3T-PDxxF is specified by the Init dialog box. Recheck the setting.

5.2.3 LAN Interface

- ☐ Was the PC7501 shut off and restarted after the IP address was set?
- ☐ Is the interface selection switch on the rear panel of the emulator PC7501 set to "LAN"?
  ⇨ 3.2.1 Interface Selection Switch (P.22)
- ☐ Is the 10BASE-T cable connected correctly to both the emulator PC7501 and the hub?
  ⇨ 4.2.3 Connecting by LAN Interface (P.31)
- ☐ If the PC7501 and host machine are directly connected, are they connected by a 10BASE-T cross cable?
- ☐ If the PC7501 replies to the ping command in the DOS window, recheck the settings in the Init dialog box of the emulator debugger M3T-PDxxF.
- ☐ The interface setting of the emulator debugger M3T-PDxxF is specified by the Init dialog box. Recheck the setting.
- ☐ Is the emulator debugger M3T-PDxxF set for the LAN interface?
- ☐ If the PC7501 and host machine are set to separate networks, execute the ping command for the PC/EWS on the network to which the PC7501 is connected. If no reply is received, check the network setting of the host machine.
- ☐ If the PC7501 and host machine are set to separate networks, is a gateway set in the OS? (192.168.1.254 in the figure below)
- ☐ Does an IP address for a gateway registered with the PC7501 specify the gateway that the PC7501 uses? (192.168.2.254 in the figure below)

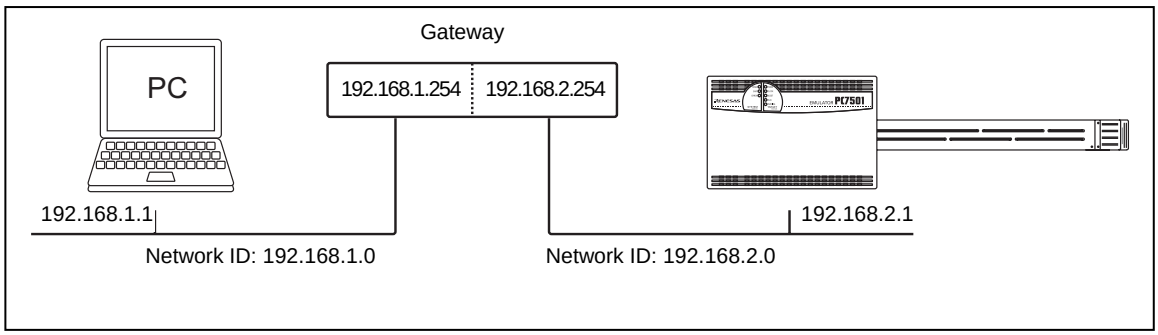

Figure 5.1 Network configuration

5.3 Firmware Download Error

If the power is shut off during the self-check or firmware download for an unexpected reason, it may happen that the system does not start up normally. In such a case, follow the procedure below to download firmware one more time.

⇨ 4.4 Downloading Firmware (P.36)

(1) Set the interface selection switch on the rear panel to "LPT." Then, connect the LPT parallel interface cable to the emulator PC7501 and host machine.

(2) Within 2 seconds of activating power to the emulator PC7501, press the RESET switch on the front panel to change its mode to maintenance mode.

(3) Start up the emulator debugger M3T-PDxxF.

(4) When a firmware download instruction appears on the emulator debugger M3T-PDxxF's startup screen, follow the message to download firmware one more time.
During downloading, the ERROR system status LED flashes. This means firmware is being downloaded, so it is not a fault of the system.

(5) The download requires approximately 90 seconds. When the download is completed, the system automatically restarts and returns to the normal mode.

(6) Execute the self-check after turning off the power. The startup procedure in step (1) above is provided for entering the special mode for maintenance purposes. Do not use this procedure unless you are executing the self-check or downloading firmware.

⇨ 4.5 Self-check (P.37)

5.4 Target Status Error in the Self-check

The emulator PC7501 checks the status of the emulation probe M3xxxxTx-EPB or R0ExxxxxxEPB00, firmware, and target MCU before it starts the self-check. A target status error results if a fault is detected with respect to the following three items:

⇨ 4.5 Self-check (P.37)

(1) Connection to the emulation probe M3xxxxTx-EPB or R0ExxxxxxEPB00
(2) Matching of emulation probe M3xxxxTx-EPB or R0ExxxxxxEPB00 and firmware
(3) Status of target MCU

If a target status error is encountered, check the following:

- ☐ Is the emulation probe firmly plugged into the emulator PC7501's connector?
  ⇨ 4.3 Connecting Emulation Probe M3xxxxTx-EPB or R0ExxxxxxEPB00 (P.35)
- ☐ Is the firmware matched to the emulation probe?
  Execute the latest emulator debugger M3T-PDxxF. If the emulator debugger M3T-PDxxF starts up normally (waiting for command input), firmware is not the cause of error. If a firmware download instruction appears on the screen when you call up the emulator debugger M3T-PDxxF, follow the message to download the firmware that is matched to the emulation probe.
  ⇨ 4.4 Downloading Firmware (P.36)

5.5 System Status Error in the Self-check

If the self-check does not terminate normally, your system may be malfunctioning. In such a case, consult your local distributor.

⇨ 6.5 How to Make Request for Repair (P.44)

5.6 How to Request for Support

After checking the items in "Chapter 5 Troubleshooting," fill in the text file which is downloaded from the following page, then send the information to your local distributor.

http://tool-support.renesas.com/eng/toolnews/registration/support.txt

For prompt response, please specify the following information:

(1) Operating environment
- Operating voltage: X.X [V]
- Operating frequency: XX.X [MHz]
- Clock supply to the MCU: Internal oscillator/External oscillator
- Target system: Connected/Not connected

(2) Condition
- The emulator debugger starts up/does not start up
- The error is detected/not detected in the self-check
- Frequency of errors: always/frequency ( )

(3) Problem

Chapter 6 Maintenance and Guarantee

This chapter describes how to maintenance, repair provisions and how to request for repair.

6.1 User Registration

When you purchase our product, be sure register as a user. For user registration, refer to “User Registration” (P.8) of this user's manual.

6.2 Maintenance

(1) If dust or dirt collects on this product, wipe it off with a dry soft cloth.
Do not use thinner or other solvents because these chemicals can cause the surface coating to separate.

(2) When you do not use this product for a long period, remove the power supply, the host machine and the user system.

6.3 Guarantee

If your product becomes faulty within one year after its purchase while being used under good conditions by observing "IMPORTANT" and "Precautions for Safety" described in this user's manual, we will repair or replace your faulty product free of charge. Note, however, that if your product's fault is raised by any one of the following causes, we will repair it or replace it with new one with extra-charge:

- Misuse, abuse, or use under extraordinary conditions
- Unauthorized repair, remodeling, maintenance, and so on
- Inadequate user's system or misuse of it
- Fires, earthquakes, lightning, storm, flood and other unexpected disasters and damages.

In the above cases, contact your local distributor. If your product is being leased, consult the leasing company or the owner.

6.4 Repair Provisions

Repairs not covered by warranty

The products elapsed more than one year after purchase are not covered by warranty.

Replacement not covered by warranty

If your product's fault falls in any of the following categories, the fault will be corrected by replacing the entire product instead of repair, or you will be advised to purchase new one, depending on the severity of the fault.

- Faulty or broken mechanical portions
- Flaw, separation, or rust in coated or plated portions
- Flaw or cracks in plastic portions
- Faults or breakage caused by improper use or unauthorized repair or modification
- Heavily damaged electric circuits due to overvoltage, overcurrent or shorting of power supply
- Cracks in the printed circuit board or burnt-down patterns
- Wide range of faults that makes replacement less expensive than repair
- Unlocatable or unidentified faults

Expiration of the repair period

When a period of one year elapses after the model was dropped from production, repairing products of the model may become impossible.

Transportation fees at sending your product for repair

Please send your product to us for repair at your expense.

6.5 How to Make Request for Repair

If your product is found faulty, fill in a Repair Request Sheet downloadable from the following URL. And email the sheet and send the product to your local distributor.

http://www.renesas.com/repair

⚠ CAUTION

Note on Transporting the Product:

When sending your product for repair, use the packing box and cushion material supplied with this product when delivered to you and specify handling caution for it to be handled as precision equipment. If packing of your product is not complete, it may be damaged during transportation. When you pack your product in a bag, make sure to use conductive polyvinyl supplied with this product (usually a blue bag). When you use other bags, they may cause a trouble on your product because of static electricity.

Chapter 7 External Dimensions & Interface Cable Specifications

7.1 External Dimensions of the Emulator PC7501

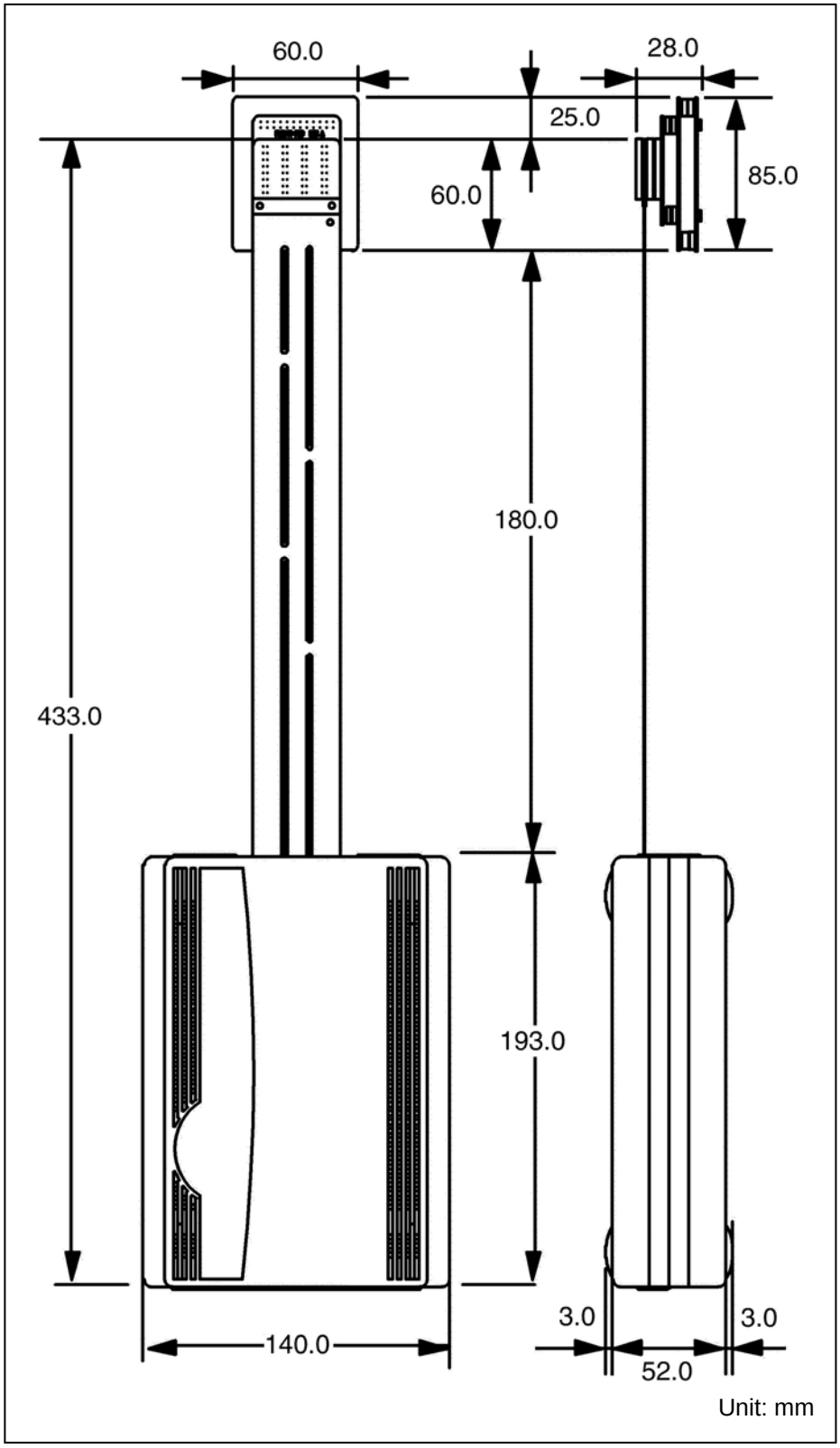

Figure 7.1 External dimensions of the emulator PC7501 (when attaching the M30830T-FPB)

7.2 LPT Parallel Interface Cable

The LPT parallel interface connector used for emulator PC7501 is an IEEE1284-C (36-pin half-pitch) connector.

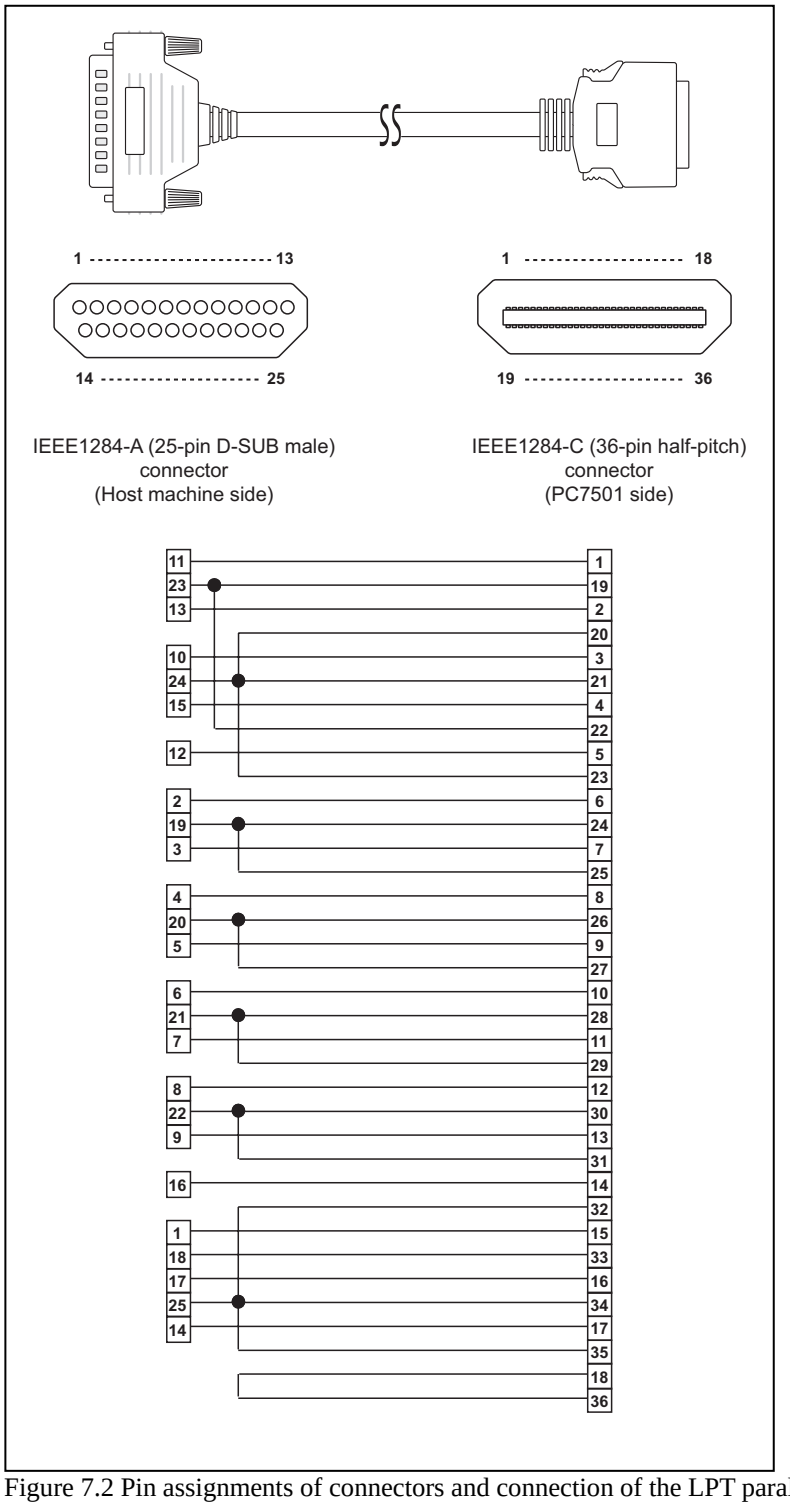

Figure 7.2 Pin assignments of connectors and connection of the LPT parallel interface cable

MEMO

PC7501 User's Manual

Publication Date: Nov 01, 2010 Rev.5.00

Published by: Renesas Electronics Corporation

Edited by: Microcomputer Tool Development Department 2
Renesas Solutions Corp.

SALES OFFICES

Renesas Electronics Corporation

http://www.renesas.com

Refer to "http://www.renesas.com/" for the latest and detailed information.

Renesas Electronics America Inc.
2880 Scott Boulevard Santa Clara, CA 95050-2554, U.S.A.
Tel: +1-408-588-6000, Fax: +1-408-588-6130

Renesas Electronics Canada Limited
1101 Nicholson Road, Newmarket, Ontario L3Y 9C3, Canada
Tel: +1-905-898-5441, Fax: +1-905-898-3220

Renesas Electronics Europe Limited
Dukes Meadow, Millboard Road, Bourne End, Buckinghamshire, SL8 5FH, U.K
Tel: +44-1628-585-100, Fax: +44-1628-585-900

Renesas Electronics Europe GmbH
Arcadiastrasse 10, 40472 Düsseldorf, Germany
Tel: +49-211-65030, Fax: +49-211-6503-1327

Renesas Electronics (China) Co., Ltd.
7th Floor, Quantum Plaza, No.27 ZhiChunLu Haidian District, Beijing 100083, P.R.China
Tel: +86-10-8235-1155, Fax: +86-10-8235-7679

Renesas Electronics (Shanghai) Co., Ltd.
Unit 204, 205, AZIA Center, No.1233 Lujiazui Ring Rd., Pudong District, Shanghai 200120, China
Tel: +86-21-5877-1818, Fax: +86-21-6887-7858 / -7898

Renesas Electronics Hong Kong Limited
Unit 1601-1613, 16/F., Tower 2, Grand Century Place, 193 Prince Edward Road West, Mongkok, Kowloon, Hong Kong
Tel: +852-2886-9318, Fax: +852 2886-9022/9044

Renesas Electronics Taiwan Co., Ltd.
7F, No. 363 Fu Shing North Road Taipei, Taiwan
Tel: +886-2-8175-9600, Fax: +886 2-8175-9670

Renesas Electronics Singapore Pte. Ltd.
1 harbourFront Avenue, #06-10, keppel Bay Tower, Singapore 098632
Tel: +65-6213-0200, Fax: +65-6278-8001

Renesas Electronics Malaysia Sdn.Bhd.
Unit 906, Block B, Menara Amcorp, Amcorp Trade Centre, No. 18, Jln Persiaran Barat, 46050 Petaling Jaya, Selangor Darul Ehsan, Malaysia
Tel: +60-3-7955-9390, Fax: +60-3-7955-9510

Renesas Electronics Korea Co., Ltd.
11F., Samik Lavied' or Bldg., 720-2 Yeoksam-Dong, Kangnam-Ku, Seoul 135-080, Korea
Tel: +82-2-558-3737, Fax: +82-2-558-5141

© 2010 Renesas Electronics Corporation and Renesas Solutions Corp. All rights reserved.
Colophon 1.0

PC7501
User's Manual

Renesas Electronics Corporation

R20UT0207EJ0500
(Previous Number:
REJ10J0078-0400)