PTVSxU1UPA series

300 W Transient Voltage Suppressor

Rev. 1 — 6 March 2014 | Product data sheet

1. Product profile

1.1 General description

300 W unidirectional Transient Voltage Suppressor (TVS) in a DFN2020-3 (SOT1061) leadless medium power Surface-Mounted Device (SMD) plastic package, designed for transient overvoltage protection.

1.2 Features and benefits

- Rated peak pulse power: P_{PPM} = 300 W
- Reverse standoff voltage range: V_{RWM} = 7.5 V to 26 V
- AEC-Q101 qualified
- Reverse current: I_{RM} = 1 nA
- Very low package height: 0.65 mm

1.3 Applications

- Power supply protection
- Industrial application
- Power management

1.4 Quick reference data

Table 1. Quick reference data

Symbol	Parameter	Conditions		Min	Typ	Max	Unit
P_{PPM}	rated peak pulse power		[1][2]	-	-	300	W
V_{RWM}	reverse standoff voltage			7.5	-	26	V

[1] In accordance with IEC 61643-321 (10/1000 μs current waveform).

[2] Measured from pin 1 and 2 to pin 3.

2. Pinning information

Table 2. Pinning

Pin	Description	Simplified outline	Graphic symbol
1 and 2	anode	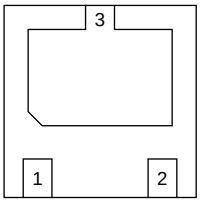 Transparent top view	 006aab838
3	cathode		

3. Ordering information

Table 3. Ordering information

Type number[1]	Package		
	Name	Description	Version
PTVSxU1UPA series	DFN2020-3	plastic thermal enhanced ultra thin small outline package; no leads; 3 terminals; body 2 × 2 × 0.65 mm	SOT1061

[1] The series consists of 6 types with reverse standoff voltages from 7.5 V to 26 V.

4. Marking

Table 4. Marking codes

Type number	Marking code
PTVS7V5U1UPA	CX
PTVS10VU1UPA	CY
PTVS12VU1UPA	CZ
PTVS15VU1UPA	D1
PTVS18VU1UPA	D2
PTVS26VU1UPA	D3

5. Limiting values

Table 5. Limiting values

In accordance with the Absolute Maximum Rating System (IEC 60134).

Symbol	Parameter	Conditions		Min	Max	Unit
P_{PPM}	rated peak pulse power		[1][3]	-	300	W
			[2][3]	-	3000	W
I_{PPM}	rated peak pulse current			-	see Table 8	
T_j	junction temperature			-	150	°C
T_{amb}	ambient temperature			–55	+150	°C
T_{stg}	storage temperature			–65	+150	°C

[1] In accordance with IEC 61643-321 (10/1000 μs current waveform).

[2] In accordance with IEC 61000-4-5 and IEC 61643-321 (8/20 μs current waveform).

[3] Measured from pin 1 and 2 to pin 3.

Table 6. ESD maximum ratings

T_{amb} = 25 °C unless otherwise specified.

Symbol	Parameter	Conditions		Min	Max	Unit
V_{ESD}	electrostatic discharge voltage	IEC 61000-4-2 (contact discharge)	[1][2]	-	30	kV
		IEC 61000-4-2 (air discharge)	[1][2]	-	30	kV

[1] Device stressed with ten non-repetitive ElectroStatic Discharge (ESD) pulses.

[2] Measured from pin 1 and 2 to pin 3.

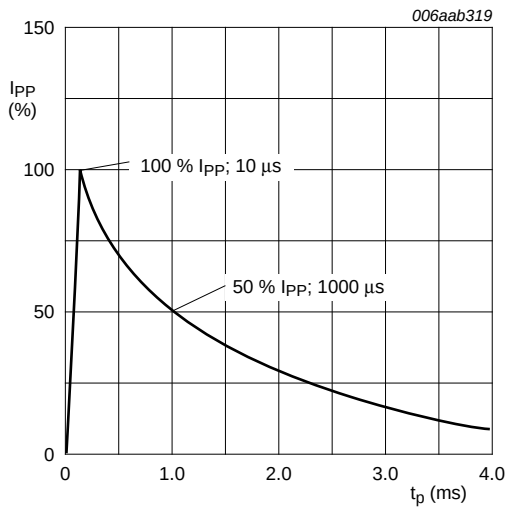

Fig 1. 10/1000 µs pulse waveform according to IEC 61643-321

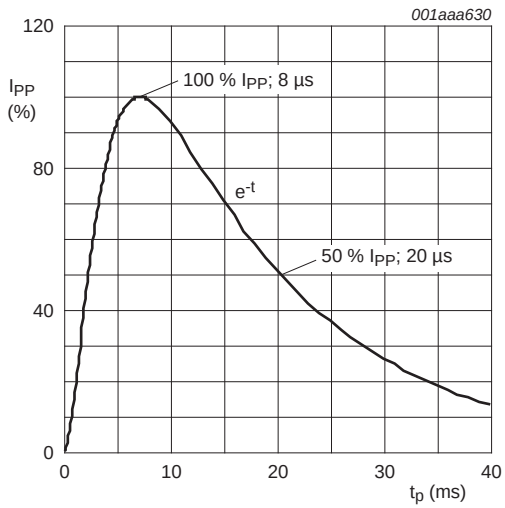

Fig 2. 8/20 µs pulse waveform according to IEC 61000-4-5 and IEC 61643-321

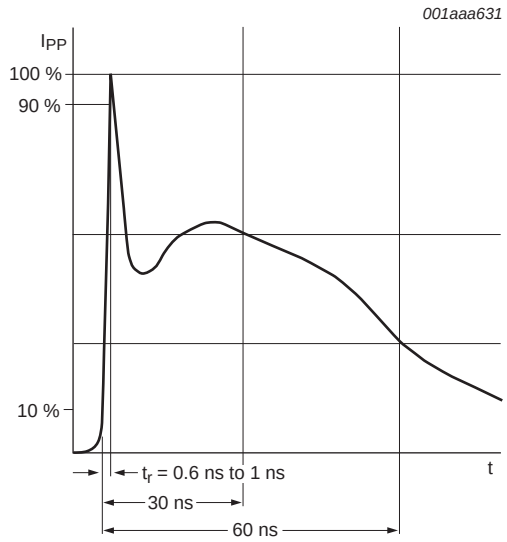

Fig 3. ESD pulse waveform according to IEC 61000-4-2

6. Thermal characteristics

Table 7. Thermal characteristics

Symbol	Parameter	Conditions		Min	Typ	Max	Unit
$R_{th(j-a)}$	thermal resistance from junction to ambient	in free air	[1]	-	-	240	K/W
			[2]	-	-	120	K/W
			[3]	-	-	65	K/W
$R_{th(j-sp)}$	thermal resistance from junction to solder point		[4]	-	-	10	K/W

[1] Device mounted on an FR4 Printed-Circuit Board (PCB), single-sided copper, tin-plated and standard footprint.

[2] Device mounted on an FR4 PCB, single-sided copper, tin-plated, mounting pad for cathode 1 cm^2.

[3] Device mounted on a ceramic PCB, Al_2O_3, standard footprint.

[4] Soldering point of cathode tab.

7. Characteristics

Table 8. Characteristics per type; PTVS7V5U1UPA to PTVS26VU1UPA

T_j = 25 °C unless otherwise specified.

Type number	Reverse standoff voltage V_{RWM} (V)	Breakdown voltage V_{BR} (V) I_R = 1 mA			Reverse leakage current I_{RM} (nA) at V_{RWM}		Rated peak pulse current I_{PPM} (A) [1][3]	Rated peak pulse current I_{PPM} (A) [2][3]	Clamping voltage V_{CL} (V); at I_{PPM} (A)[1][3]	Clamping voltage V_{CL} (V); at I_{PPM} (A)[2][3]
	Max	Min	Typ	Max	Typ	Max	Max	Max	Max	Max
PTVS7V5U1UPA	7.5	8.33	8.77	9.21	200	1000	178	23.3	19.7	12.9
PTVS10VU1UPA	10	11.10	11.70	12.30	2	50	148	17.6	23.0	17.0
PTVS12VU1UPA	12	13.30	14.00	14.70	1	50	131	15.1	25.2	19.9
PTVS15VU1UPA	15	16.70	17.60	18.50	1	50	111	12.3	28.8	24.4
PTVS18VU1UPA	18	20.00	21.00	22.10	1	50	97	10.3	32.0	29.2
PTVS26VU1UPA	26	28.90	30.40	31.90	1	50	69	7.0	43.5	42.1

[1] In accordance with IEC 61000-4-5 and IEC 61643-321 (8/20 μs current waveform).

[2] In accordance with IEC 61643-321 (10/1000 μs current waveform).

[3] Measured from pin 1 and 2 to pin 3.

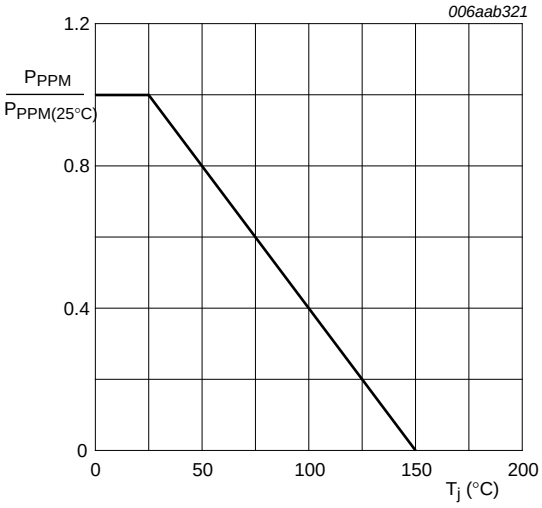

Fig 4. Relative variation of rated peak pulse power as a function of junction temperature; typical values

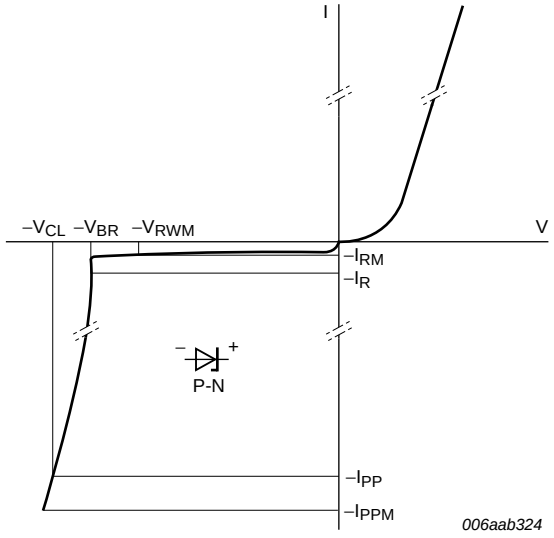

Fig 5. V-I characteristics for a unidirectional TVS protection diode

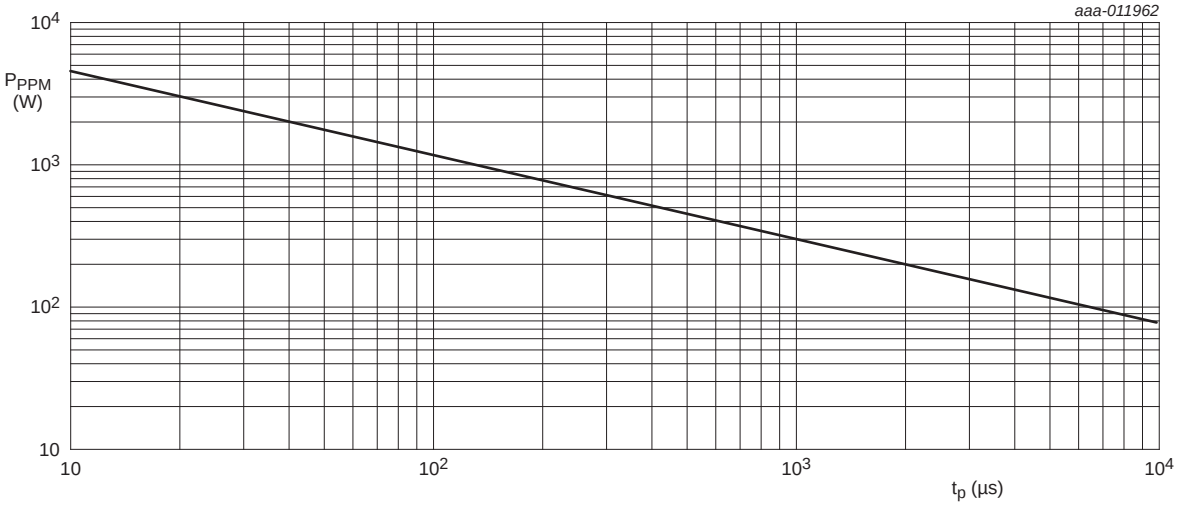

T_{amb} = 25 °C

Fig 6. Rated peak pulse power as a function of a pulse duration; typical values

8. Application information

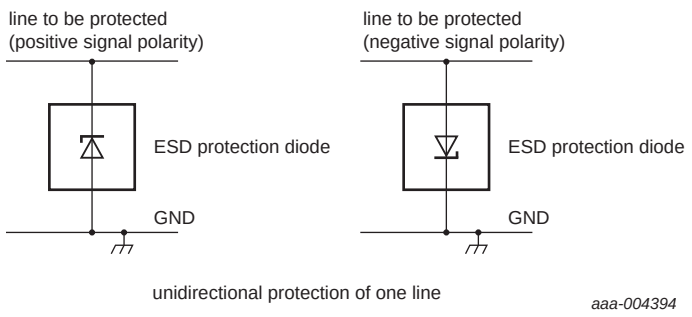

Fig 7. Application diagram

9. Test information

9.1 Quality information

This product has been qualified in accordance with the Automotive Electronics Council (AEC) standard *Q101 - Stress test qualification for discrete semiconductors*, and is suitable for use in automotive applications.

10. Package outline

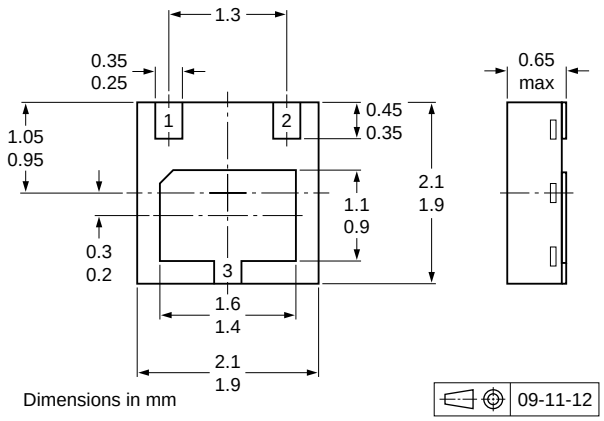

Fig 8. Package outline DFN2020-3 (SOT1061)

11. Soldering

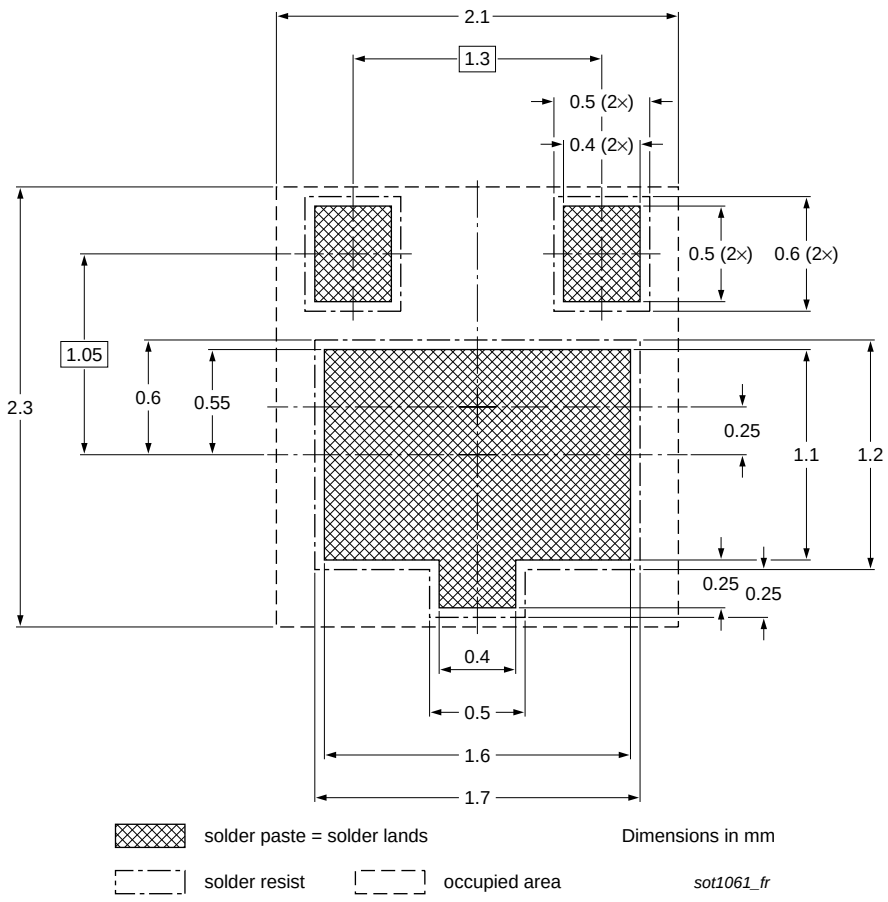

Fig 9. Reflow soldering footprint DFN2020-3 (SOT1061)

12. Revision history

Table 9. Revision history

Document ID	Release date	Data sheet status	Change notice	Supersedes
PTVSXU1UPA_SER v.1	20140306	Product data sheet	-	-

13. Legal information

13.1 Data sheet status

Document status[1][2]	Product status[3]	Definition
Objective [short] data sheet	Development	This document contains data from the objective specification for product development.
Preliminary [short] data sheet	Qualification	This document contains data from the preliminary specification.
Product [short] data sheet	Production	This document contains the product specification.

[1] Please consult the most recently issued document before initiating or completing a design.

[2] The term 'short data sheet' is explained in section "Definitions".

[3] The product status of device(s) described in this document may have changed since this document was published and may differ in case of multiple devices. The latest product status information is available on the Internet at URL http://www.nxp.com.

13.2 Definitions

Draft — The document is a draft version only. The content is still under internal review and subject to formal approval, which may result in modifications or additions. NXP Semiconductors does not give any representations or warranties as to the accuracy or completeness of information included herein and shall have no liability for the consequences of use of such information.

Short data sheet — A short data sheet is an extract from a full data sheet with the same product type number(s) and title. A short data sheet is intended for quick reference only and should not be relied upon to contain detailed and full information. For detailed and full information see the relevant full data sheet, which is available on request via the local NXP Semiconductors sales office. In case of any inconsistency or conflict with the short data sheet, the full data sheet shall prevail.

Product specification — The information and data provided in a Product data sheet shall define the specification of the product as agreed between NXP Semiconductors and its customer, unless NXP Semiconductors and customer have explicitly agreed otherwise in writing. In no event however, shall an agreement be valid in which the NXP Semiconductors product is deemed to offer functions and qualities beyond those described in the Product data sheet.

13.3 Disclaimers

Limited warranty and liability — Information in this document is believed to be accurate and reliable. However, NXP Semiconductors does not give any representations or warranties, expressed or implied, as to the accuracy or completeness of such information and shall have no liability for the consequences of use of such information. NXP Semiconductors takes no responsibility for the content in this document if provided by an information source outside of NXP Semiconductors.

In no event shall NXP Semiconductors be liable for any indirect, incidental, punitive, special or consequential damages (including - without limitation - lost profits, lost savings, business interruption, costs related to the removal or replacement of any products or rework charges) whether or not such damages are based on tort (including negligence), warranty, breach of contract or any other legal theory.

Notwithstanding any damages that customer might incur for any reason whatsoever, NXP Semiconductors' aggregate and cumulative liability towards customer for the products described herein shall be limited in accordance with the *Terms and conditions of commercial sale* of NXP Semiconductors.

Right to make changes — NXP Semiconductors reserves the right to make changes to information published in this document, including without limitation specifications and product descriptions, at any time and without notice. This document supersedes and replaces all information supplied prior to the publication hereof.

Suitability for use in automotive applications — This NXP Semiconductors product has been qualified for use in automotive applications. Unless otherwise agreed in writing, the product is not designed, authorized or warranted to be suitable for use in life support, life-critical or safety-critical systems or equipment, nor in applications where failure or malfunction of an NXP Semiconductors product can reasonably be expected to result in personal injury, death or severe property or environmental damage. NXP Semiconductors and its suppliers accept no liability for inclusion and/or use of NXP Semiconductors products in such equipment or applications and therefore such inclusion and/or use is at the customer's own risk.

Applications — Applications that are described herein for any of these products are for illustrative purposes only. NXP Semiconductors makes no representation or warranty that such applications will be suitable for the specified use without further testing or modification.

Customers are responsible for the design and operation of their applications and products using NXP Semiconductors products, and NXP Semiconductors accepts no liability for any assistance with applications or customer product design. It is customer's sole responsibility to determine whether the NXP Semiconductors product is suitable and fit for the customer's applications and products planned, as well as for the planned application and use of customer's third party customer(s). Customers should provide appropriate design and operating safeguards to minimize the risks associated with their applications and products.

NXP Semiconductors does not accept any liability related to any default, damage, costs or problem which is based on any weakness or default in the customer's applications or products, or the application or use by customer's third party customer(s). Customer is responsible for doing all necessary testing for the customer's applications and products using NXP Semiconductors products in order to avoid a default of the applications and the products or of the application or use by customer's third party customer(s). NXP does not accept any liability in this respect.

Limiting values — Stress above one or more limiting values (as defined in the Absolute Maximum Ratings System of IEC 60134) will cause permanent damage to the device. Limiting values are stress ratings only and (proper) operation of the device at these or any other conditions above those given in the Recommended operating conditions section (if present) or the Characteristics sections of this document is not warranted. Constant or repeated exposure to limiting values will permanently and irreversibly affect the quality and reliability of the device.

Terms and conditions of commercial sale — NXP Semiconductors products are sold subject to the general terms and conditions of commercial sale, as published at http://www.nxp.com/profile/terms, unless otherwise agreed in a valid written individual agreement. In case an individual agreement is concluded only the terms and conditions of the respective agreement shall apply. NXP Semiconductors hereby expressly objects to applying the customer's general terms and conditions with regard to the purchase of NXP Semiconductors products by customer.

No offer to sell or license — Nothing in this document may be interpreted or construed as an offer to sell products that is open for acceptance or the grant, conveyance or implication of any license under any copyrights, patents or other industrial or intellectual property rights.

Export control — This document as well as the item(s) described herein may be subject to export control regulations. Export might require a prior authorization from competent authorities.

Quick reference data — The Quick reference data is an extract of the product data given in the Limiting values and Characteristics sections of this document, and as such is not complete, exhaustive or legally binding.

Translations — A non-English (translated) version of a document is for reference only. The English version shall prevail in case of any discrepancy between the translated and English versions.

13.4 Trademarks

Notice: All referenced brands, product names, service names and trademarks are the property of their respective owners.

14. Contact information

For more information, please visit: **http://www.nxp.com**

For sales office addresses, please send an email to: **salesaddresses@nxp.com**

15. Contents

For more information, please visit: http://www.nxp.com
For sales office addresses, please send an email to: salesaddresses@nxp.com

Date of release: 6 March 2014
Document identifier: PTVSXU1UPA_SER