DWG. NO. SD-55932-006

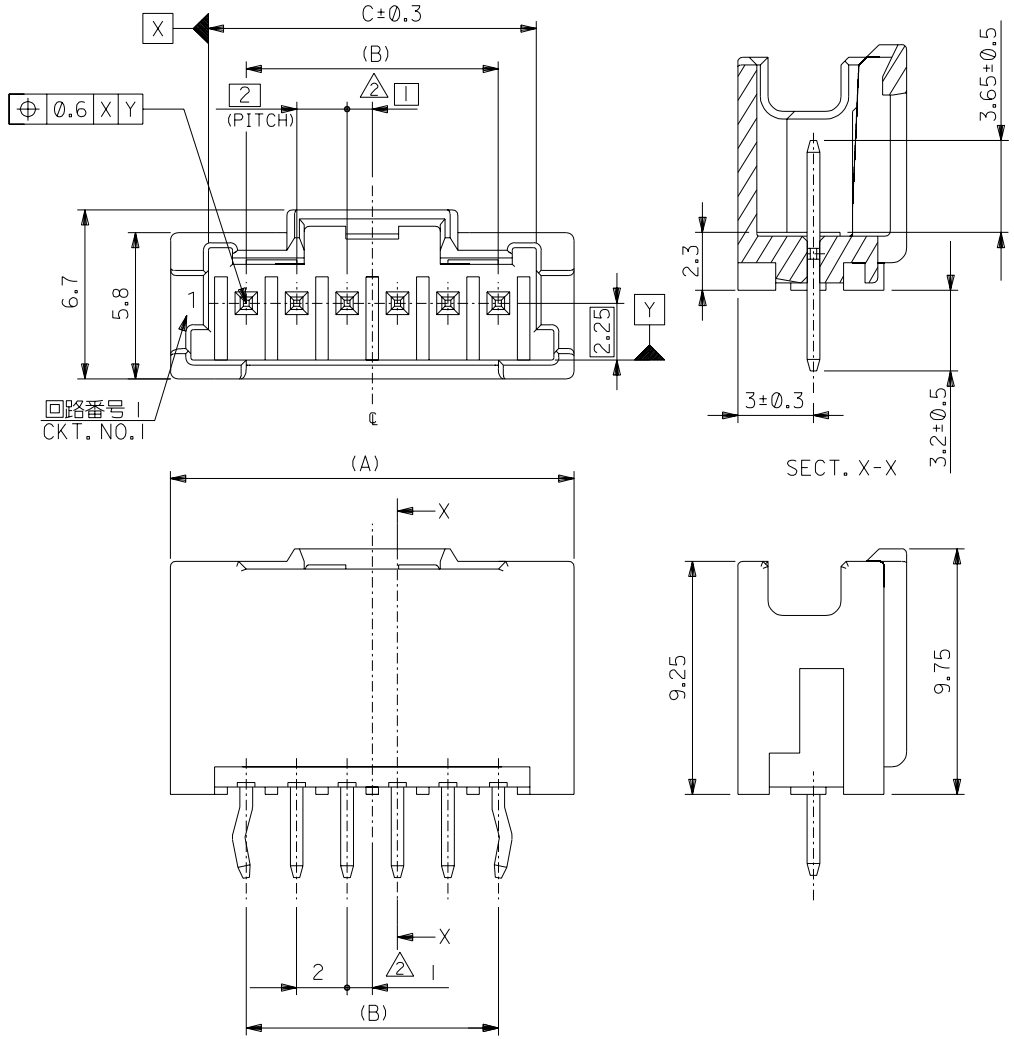

NOTE

1. 嵌合相手：51382−****
2. 偶数極（列）に適用。
3. キンクは両外側の位置に付加。
4. 製品番号 MATERIAL NO.

55932−****

極数 CIRCUIT SIZE　色 COLOR

30	自然色（白） NATURAL(WHITE)
31	黒 BLACK
32	赤 RED
33	黄 YELLOW
34	青 BLUE
35	桃 PINK
36	緑 GREEN
37	茶 BROWN
38	橙 ORANGE
39	紫 VIOLET
51	灰 GRAY
53	蛍光黄 FLUORESCENT YELLOW
54	水 PALE BLUE
55	蛍光桃 FLUORESCENT PINK
56	黄緑 YELLOWISH GREEN
58	蛍光橙 FLUORESCENT ORANGE

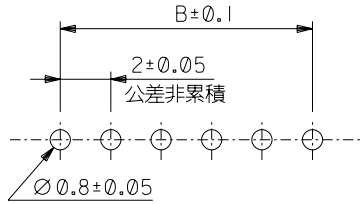

推奨基板寸法
（t＝ 1.6 ）

C	B	A	4 MATERIAL NO.	CKT.
31	28	34	55932-15**	15
29	26	32	55932-14**	14
27	24	30	55932-13**	13
25	22	28	55932-12**	12
23	20	26	55932-11**	11
21	18	24	55932-10**	10
19	16	22	55932-09**	9
17	14	20	55932-08**	8
15	12	18	55932-07**	7
13	10	16	55932-06**	6
11	8	14	55932-05**	5
9	6	12	55932-04**	4
7	4	10	55932-03**	3
5	2	8	55932-02**	2

MODEL NO.：55932-****

DIMENSIONS: □mm/INCH □INCH/mm ☒mm ONLY

SHT　REV

DESIGN UNITS ☒mm □INCH

THIRD ANGLE PROJECTION

REVISE ON CAD ONLY

10 UNDER 未満	±0.2	DRAWN BY & DATE T.NIITSU '02/2/8	TITLE: 2.0 W/B SINGLE CONN. PLUG HOUING ASS'Y ST -LEAD FREE-
10 OVER 以上 30 UNDER 未満	±0.25	CHECKED BY & DATE K.ASAKAWA '03/6/12	
30 OVER 以上	±0.3	APPROVED BY & DATE T.YAMAGUCHI '03/6/12	MOLEX INCORPORATED
ANGLE 角度	±3°	CAD FILENAME SD-55932-006.S01	MATERIAL NO. 55932-**** / DRAWING NO. SD-55932-006 / SHEET NO. 1 of 2

GENERAL TOLERANCES: (UNLESS SPECIFIED) 一般公差

SCALE

MATERIAL 材料 ピン：黄銅、ニッケル下地錫メッキ
ハウジング：PBT

FINISH 仕上げ

WIRE RANGE 適用電線範囲

INS. RANGE 被覆外径

REV	DESCRIPTION
G	REVISED '04/05/31 2G2NO. J2004-4514 DRWN: M.ERIGUCH CH'K: K.ASAKAWA APPR: S.ICHIKAWA
F	REVISED '03/06/12 2G1NO. J2003-3127 DRWN: N.ITO CH'K: K.ASAKAWA APPR: T.YAMAGUCHI
E	REVISED '03/04/04 2G0NO. J2003-2421 DRWN: N.ITO CH'K: K.ASAKAWA APPR: T.YAMAGUCHI

2G4NO. DRWN: CH'K: APPR:

2G3NO. DRWN: CH'K: APPR:

THIS DRAWING CONTAINS INFORMATION THAT IS PROPRIETARY TO MOLEX INCORPORATED AND SHOULD NOT BE USED WITHOUT WRITTEN PERMISSION.

SIZE B

DO NOT SCALE DRAWING

EN-02J(097) MXJ-54

DWG. NO. SD-55932-006

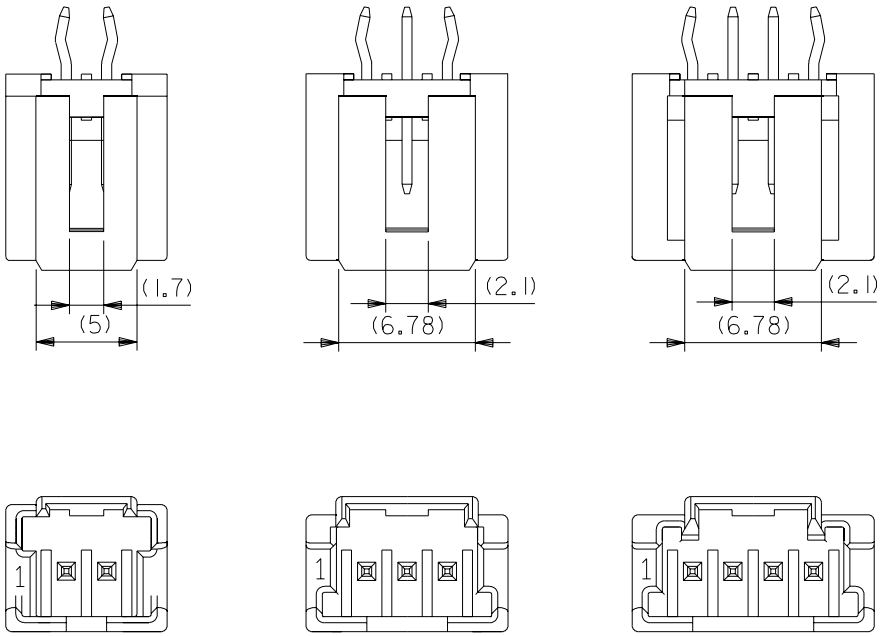

2 CIRCUIT

3 CIRCUIT

4 CIRCUIT

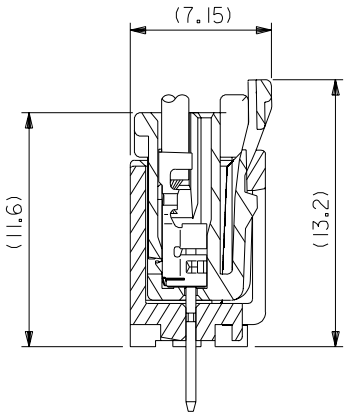

嵌合断面図

DO NOT SCALE DRAWING	234NO. DRWN: CH'K: APPR:	233NO. DRWN: CH'K: APPR:	REVISED '04/05/31 232NO. J2004-4514 DRWN: M.ERIGUCHI CH'K: K.ASAKAWA APPR: S.ICHIKAWA	REVISED '03/06/12 231NO. J2003-3127 DRWN: N.ITO CH'K: K.ASAKAWA APPR: T.YAMAGUCHI	REVISED '03/04/04 230NO. J2003-2421 DRWN: N.ITO CH'K: K.ASAKAWA APPR: T.YAMAGUCHI	DESCRIPTION	MATERIAL 材料 SEE SHEET 1 OF 2	GENERAL TOLERANCES: (UNLESS SPECIFIED) 一般公差		SCALE	MODEL NO.: 55932-****	DIMENSIONS: ☐ mm/INCH ☐ INCH/mm ☒ mm ONLY	SHT	REV
											DESIGN UNITS ☒mm ☐INCH	229 THIRD ANGLE PROJECTION	227 REVISE ON CAD ONLY	
							FINISH 仕上げ	10 UNDER 未満	±0.2	DRAWN BY & DATE T.NIITSU '02/2/8	TITLE: 2.0 W/B SINGLE CONN. PLUG HOUING ASS'Y ST -LEAD FREE-			
								10 OVER 以上 30 UNDER 未満	±0.25	CHECKED BY & DATE K.ASAKAWA '03/6/12				
							WIRE RANGE 適用電線範囲	30 OVER 以上	±0.3	APPROVED BY & DATE T.YAMAGUCHI '03/6/12	molex MOLEX INCORPORATED			
								ANGLE 角度	±3°	CAD FILENAME SD-55932-006.S02	MATERIAL NO. 55932-****	DRAWING NO. SD-55932-006	SHEET NO. 2 of 2	
			G	F	E	REV	INS. RANGE 被覆外径			228				

THIS DRAWING CONTAINS INFORMATION THAT IS PROPRIETARY TO MOLEX INCORPORATED AND SHOULD NOT BE USED WITHOUT WRITTEN PERMISSION.

SIZE B

EN-02J(097) MXJ-54

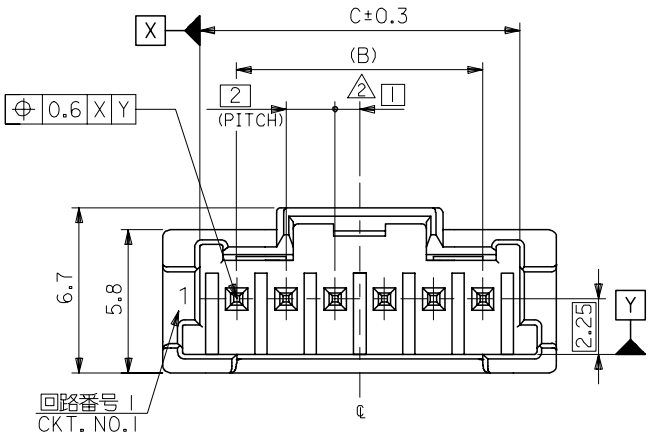

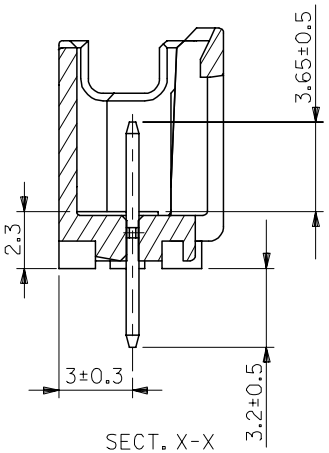

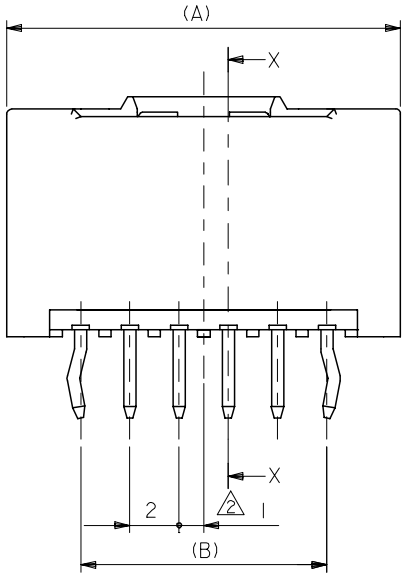

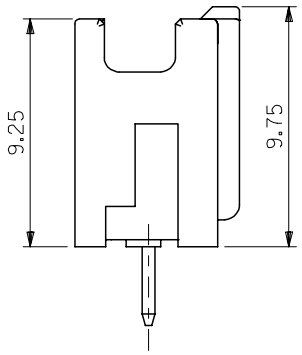

NOTE

1. 嵌合相手：51382−＊＊＊＊
2. 偶数極（列）に適用。
3. キンクは両外側の位置に付加。
4. ピン：黄銅、ニッケル下地錫メッキ
   ハウジング：PBT
5. 適合リテーナー ： 500638 シリーズ
   APPLICABLE RETAINER : 500638 SERIES.
6. 製品番号 MATERIAL NO.

55932-＊＊＊＊

極数 CIRCUIT SIZE　色 COLOR

30	自然色（白） NATURAL(WHITE)
31	黒 BLACK
32	赤 RED
33	黄 YELLOW
34	青 BLUE
35	桃 PINK
36	緑 GREEN
37	茶 BROWN
38	橙 ORANGE
39	紫 VIOLET
51	灰 GRAY
53	蛍光黄 FLUORESCENT YELLOW
54	水 PALE BLUE
55	蛍光桃 FLUORESCENT PINK
56	黄緑 YELLOWISH GREEN
58	蛍光橙 FLUORESCENT ORANGE

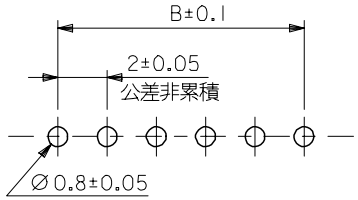

推奨基板寸法
（t＝ 1.6 ）

C	B	A	6 MATERIAL NO.	CKT.
31	28	34	55932-15＊＊	15
29	26	32	55932-14＊＊	14
27	24	30	55932-13＊＊	13
25	22	28	55932-12＊＊	12
23	20	26	55932-11＊＊	11
21	18	24	55932-10＊＊	10
19	16	22	55932-09＊＊	9
17	14	20	55932-08＊＊	8
15	12	18	55932-07＊＊	7
13	10	16	55932-06＊＊	6
11	8	14	55932-05＊＊	5
9	6	12	55932-04＊＊	4
7	4	10	55932-03＊＊	3
5	2	8	55932-02＊＊	2

MODEL NO.: 55932-＊＊＊＊

RELEASED
EC NO: J2006-1522
DRWN:YMAEDA 2005/11/08
CHKD:NUKITA 2005/11/08
APPR:NUKITA 2005/11/09
DESCRIPTION
REV 0

GENERAL TOLERANCES (UNLESS SPECIFIED)

10 UNDER	±0.2
10 OVER 30 UNDER	±0.25
30 OVER	±0.3
ANGULAR ±3 °	

DRAFT WHERE APPLICABLE MUST REMAIN WITHIN DIMENSIONS

DIMENSION STYLE: MM ONLY	SCALE: ---	DESIGN UNITS: METRIC	THIRD ANGLE PROJECTION
DRAWN BY: YMAEDA	DATE: 2005/06/13	TITLE: 2.0 W/B CONN.PLUG HOUSING ASS'Y WO BOSS -LEAD FREE-	
CHECKED BY: MTANAKA	DATE: 2005/06/13		
APPROVED BY: NUKITA	DATE: 2005/06/13	molex MOLEX INCORPORATED	
MATERIAL NO.: SEE CHART		DOCUMENT NO.: SD-55932-007	SHEET NO.: 1 OF 2
SIZE: A3	THIS DRAWING CONTAINS INFORMATION THAT IS PROPRIETARY TO MOLEX INCORPORATED AND SHOULD NOT BE USED WITHOUT WRITTEN PERMISSION		

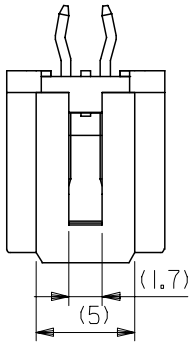

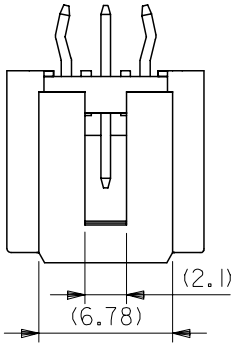

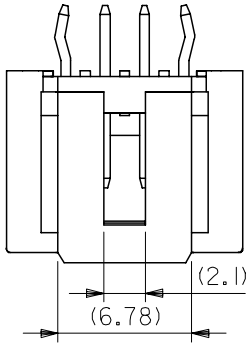

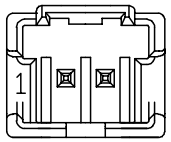

2 CIRCUIT

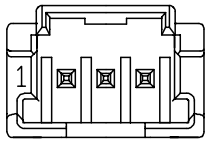

3 CIRCUIT

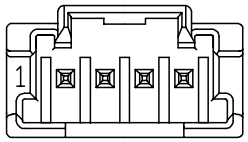

4 CIRCUIT

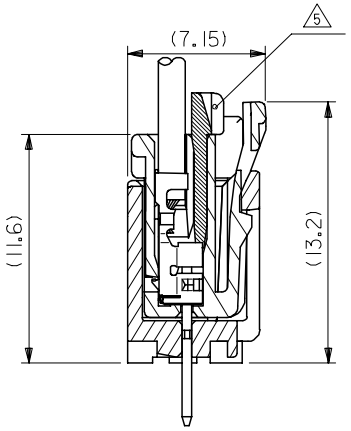

嵌合断面図

RELEASED	2005/11/08		
EC NO: J2006-1522	2005/11/08		
DRWN:YMAEDA	2005/11/08		
CHKD:NUKITA	2005/11/09		
APPR:NUKITA			
0	REV	DESCRIPTION	

GENERAL TOLERANCES (UNLESS SPECIFIED)

10 UNDER	±0.2
10 OVER 30 UNDER	±0.25
30 OVER	±0.3
ANGULAR ±3 °	

DRAFT WHERE APPLICABLE MUST REMAIN WITHIN DIMENSIONS

DIMENSION STYLE: MM ONLY	SCALE: ---	DESIGN UNITS: METRIC	THIRD ANGLE PROJECTION
DRAWN BY: YMAEDA	DATE: 2005/06/13	TITLE: 2.0 W/B CONN.PLUG HOUSING ASS'Y WO BOSS -LEAD FREE-	
CHECKED BY: MTANAKA	DATE: 2005/06/13		
APPROVED BY: NUKITA	DATE: 2005/06/13	molex MOLEX INCORPORATED	
MATERIAL NO.: SEE CHART		DOCUMENT NO.: SD-55932-007	SHEET NO.: 2 OF 2
SIZE: A3	THIS DRAWING CONTAINS INFORMATION THAT IS PROPRIETARY TO MOLEX INCORPORATED AND SHOULD NOT BE USED WITHOUT WRITTEN PERMISSION		

MODEL NO.: 55932-****

tb_frame_A3_J_ME_S
Rev. D 2004/04/02

EN-02JA(021)