view shown without plastic pin and grounding

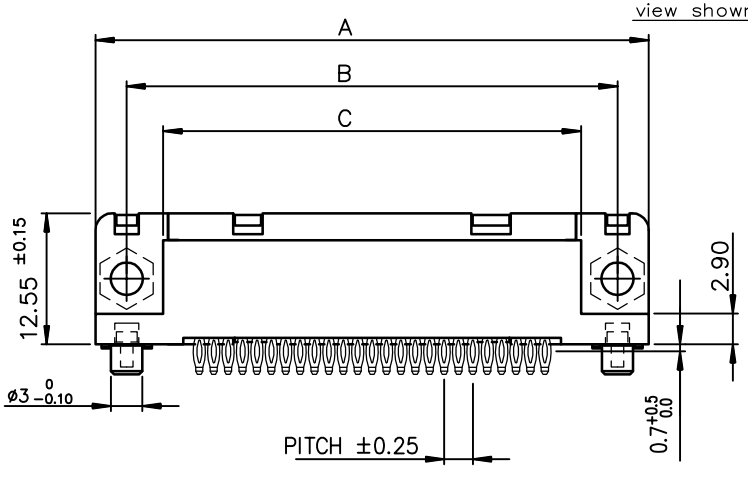

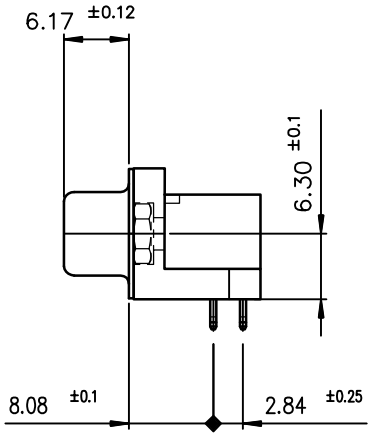

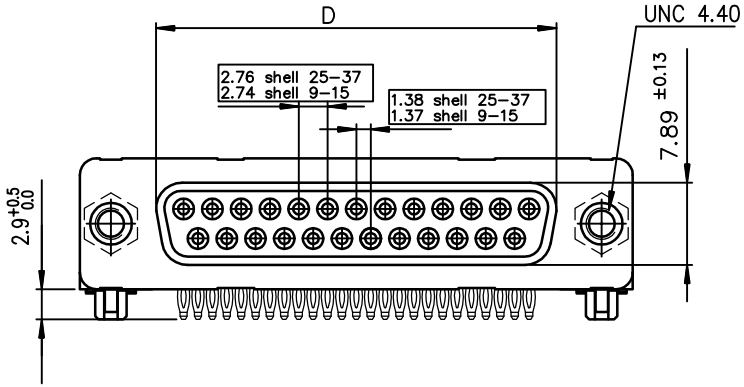

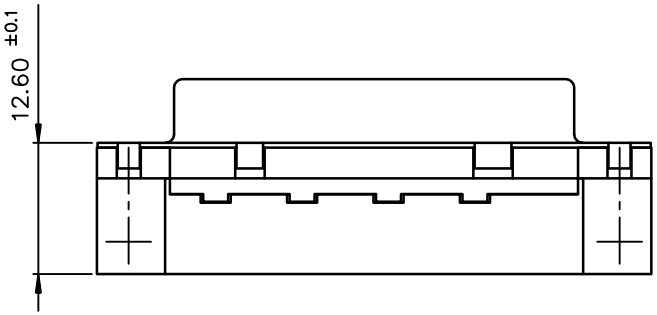

PC card drilling dimensions(after plating)
(thickness 1.60 ±0.25 mm)

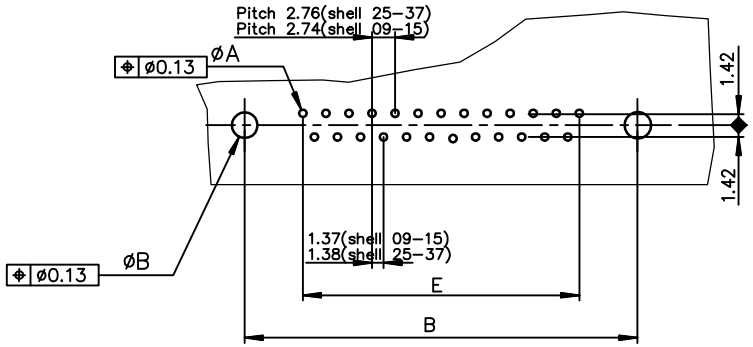

SHELL	A±0.38	B±0.12	C±0.10	D±0.25	E±0.07	TIN LEAD PART NUMBER	TIN LEAD PART NUMBER	LEAD FREE PART NUMBER	LEAD FREE PART NUMBER
09	30.81	24.99	18.00	16.21	10.96	D09S80C4GX00	D09S80C6GX00	D09S80C4GX00LF	D09S80C6GX00LF
15	39.14	33.32	26.32	24.54	19.18	D15S80C4GX00	D15S80C6GX00	D15S80C4GX00LF	D15S80C6GX00LF
25	53.03	47.04	40.04	38.25	33.12	D25S80C4GX00	D25S80C6GX00	D25S80C4GX00LF	D25S80C6GX00LF
37	69.32	63.50	56.50	54.71	49.68	D37S80C4GX00	D37S80C6GX00	D37S80C4GX00LF	D37S80C6GX00LF
						Gold flash	0,76 » gold	Gold flash	0,76 » gold

GENERAL CHARACTERISTICS AND ROHS INFORMATIONS:

SEE DRAWING C01−8646−0001

Detail of grounding strip

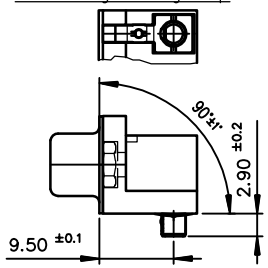

ltr	ecn no	dr	date
H	ELX−I−17859	MP	2014/06/06

dr	PESSON	1995/03/10
engr	MITHUN PAUL	2014/06/06
chr	ALIAS BABU	2014/06/06
appd	BIJU K PAUL	2014/06/06

mat'l. code: −

surface: ISO 1302

tolerance: ISO 406 ISO 1101

tolerances unless otherwise specified

angles: 0°±2°

linear: .0±.0.1 / .00±0.1 / .000±0.1

projection: MM

scale 2:1

product family: D−SUB

title: FEMALE CONNECTOR DELTA D
RIGHT ANGLED PRESS FIT

dwg no: C01−8646−0174

sheet 1 of 1

size: A3

type: Product Customer Drawing

sheet index | revision H | sheet 1

form: A3

Copyright FCI
FCIconnect.com
PDS: Rev :H STATUS:Released Printed: Jun 09, 2014