LM

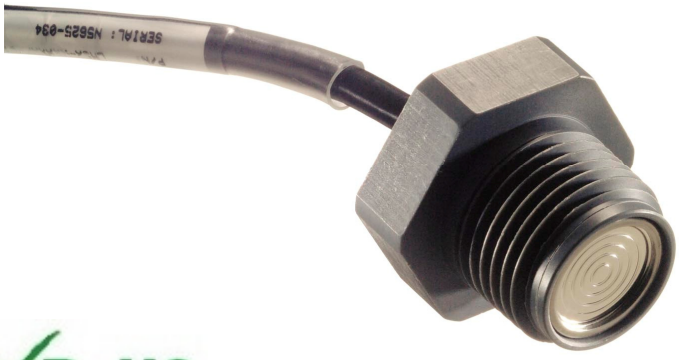

- **316L SS Pressure Sensor with PVC Threads**
- **Small Profile**
- **0.5 - 4.5V High Level Output**
- **Gage**
- **ASIC Calibrated**

DESCRIPTION

The LM Series incorporates stainless steel and plastic isolation suitable for level sensing in water and other liquids. The LM series uses a patent pending low cost stainless steel sensor in a PVC plastic fitting. The modular design is adaptable to an infinite number of plastic port variations. With high performance in a small form factor, the LM Series enables the miniaturization of high accuracy pressure systems. The standard output is .5V to 4.5V with a 5V supply.

FEATURES

- Threaded Process Fitting
- -20ºC to +70ºC Operating Temperature Range
- ±1% Pressure Non Linearity
- ±3.0% Total Error Band
- Solid State Reliability

APPLICATIONS

- Irrigation
- RV and Marine Holding Tank Level
- Water Storage & Recycling Systems
- Small Tank Fluid Level
- Chillers & Evaporative Coolers

STANDARD RANGES

Range	psig	Range	Bar
0 to 1	•	0 to .07	•
0 to 2	•	0 to .20	•
0 to 5	•	0 to .35	•
0 to 15	•	0 to 1	•
0 to 30	•	0 to 2	•
0 to 50	•	0 to 5	•
0 to 100	•	0 to 7	•
0 to 150	•	0 to 10	•

Note: Intermediate pressure ranges available.

PERFORMANCE SPECIFICATIONS

Supply Voltage: 5.0Vdc
Ambient Temperature: 25°C (unless otherwise specified)

PARAMETERS	MIN	TYP	MAX	UNITS	NOTES
Full Scale Output		4.5		V	1
Zero Pressure Output		0.5		V	1
Pressure Non Linearity	-1	±0.25	1	%Span	2
Pressure Hysteresis	-0.1		0.1	%Span	
Repeatability		±0.02		%Span	
Accuracy (combined linearity, hysteresis, & repeatability)		±0.3		%Span	2
Temperature Error – Span	-1.5		1.5	%Span	3
Temperature Error – Zero	-1.5		1.5	%Span	3
Total Error Band (includes calibration errors above & temperature effects over the compensated range)			±3 (>5psi) ±5 (5psi) ±7 (<5psi)	%Span	
Supply Voltage	4.75	5.00	5.25	V	
Supply Current	2.0	2.5	3.0	mA	
Insulation Resistance (50Vdc)	50			MΩ	4
Pressure Overload			3X	Rated	5
Compensated Temperature	0		40	ºC	
Operating Temperature	-20		+70	ºC	
Weight			11	grams	
Media – Pressure Port	Liquids and Gases compatible with 316L Stainless Steel and Buna-N O-Ring				
Media – Reference Port	Compatible with Silicon, Pyrex, Gold, Epoxy, Fluorosilicone RTV, FR-4, and 316L Stainless Steel				

Notes

1. Ratiometric to supply voltage.
2. Best fit straight line.
3. Maximum temperature error between 0 ºC and 40 ºC with respect to 25 ºC. ±2% maximum for devices below 5psi and .07Bar.
4. Between case and cable.
5. 3X maximum not to exceed 150 psi. 20 psi for 5 psi and lower.

DIMENSIONS

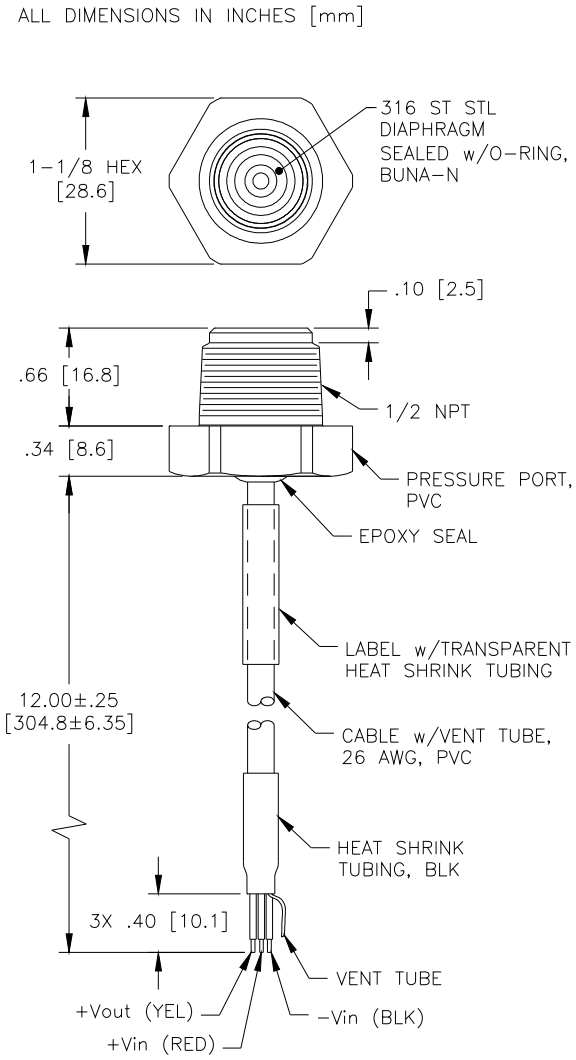

CONNECTIONS

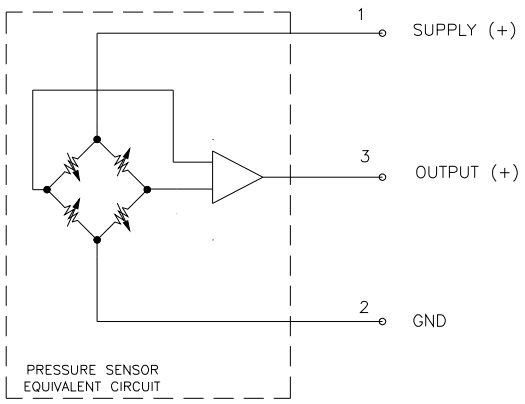

ORDERING INFORMATION

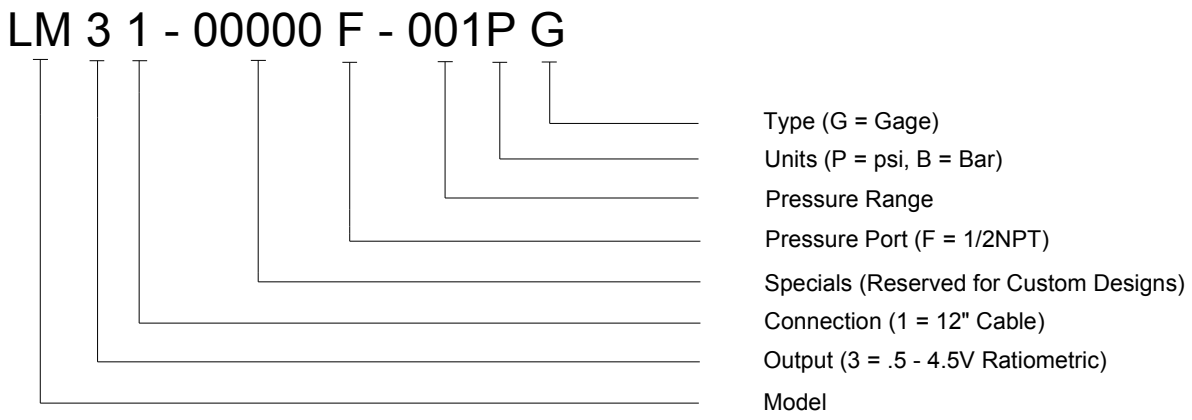

NORTH AMERICA

Measurement Specialties
45738 Northport Loop West
Fremont, CA 94538
Tel: 1-800-767-1888
Fax: 1-510-498-1578
Sales: pfg.cs.amer@meas-spec.com

EUROPE

Measurement Specialties
(Europe), Ltd.
26 Rue des Dames
78340 Les Clayes-sous-Bois, France
Tel: +33 (0) 130 79 33 00
Fax: +33 (0) 134 81 03 59
Sales: pfg.cs.emea@meas-spec.com

ASIA

Measurement Specialties
(China), Ltd.
No. 26 Langshan Road
Shenzhen High-Tech Park (North)
Nanshan District, Shenzhen 518057
China
Tel: +86 755 3330 5088
Fax: +86 755 3330 5099
Sales: pfg.cs.asia@meas-spec.com