MC9S12XS256
Reference Manual

Covers MC9S12XS Family
MC9S12XS256
MC9S12XS128
MC9S12XS64

HCS12
Microcontrollers

MC9S12XS256RMV1

Rev. 1.13

08/2012

freescale.com

To provide the most up-to-date information, the document revision on the World Wide Web is the most current. A printed copy may be an earlier revision. To verify you have the latest information available,

refer to freescale.com.

This document contains information for the complete S12XS Family and thus includes a set of separate flash (FTMR) module sections to cover the whole family. A full list of family members and options is included in the appendices.

This document contains information for all constituent modules, with the exception of the CPU. For CPU information please refer to CPU12XV1 in the CPU12/CPU12X Reference Manual.

Revision History

Date	Revision Level	Description
November, 2010	1.11	Updated Chapter 3 Memory Mapping Control (S12XMMCV4) Updated Chapter 11 Freescale's Scalable Controller Area Network (S12MSCANV3) Updated Chapter 14 Serial Communication Interface (S12SCIV5) Updated footnotes on table 1-2 Updated note in Appendix F Ordering Information
Jul, 2011	1.12	Corrected API accuracy in feature list Corrected name of pin #27 in 80QFP pinout (PE5->PE4) Updated Chapter 2 Port Integration Module (S12XSPIMV1) Updated Chapter 11 Freescale's Scalable Controller Area Network (S12MSCANV3)
Aug, 2012	1.13	Updated Chapter 4 Interrupt (S12XINTV2) Updated Chapter 8 S12XE Clocks and Reset Generator (S12XECRGV1) Updated V_{DDF} max. voltage in Appendix A Electrical Characteristics Minor editorial corrections in: Chapter 2 Port Integration Module (S12XSPIMV1) Chapter 5 Background Debug Module (S12XBDMV2) Chapter 6 S12X Debug (S12XDBGV3) Module

Chapter 1 Device Overview S12XS Family 19
Chapter 2 Port Integration Module (S12XSPIMV1) 59
Chapter 3 Memory Mapping Control (S12XMMCV4) 127
Chapter 4 Interrupt (S12XINTV2) 151
Chapter 5 Background Debug Module (S12XBDMV2) 169
Chapter 6 S12X Debug (S12XDBGV3) Module 195
Chapter 7 Security (S12XS9SECV2). 231
Chapter 8 S12XE Clocks and Reset Generator (S12XECRGV1) 237
Chapter 9 Pierce Oscillator (S12XOSCLCPV2) 267
Chapter 10 Analog-to-Digital Converter (ADC12B16CV1) 271
Chapter 11 Freescale’s Scalable Controller Area Network (S12MSCANV3) 295
Chapter 12 Periodic Interrupt Timer (S12PIT24B4CV1) 349
Chapter 13 Pulse-Width Modulator (S12PWM8B8CV1) 365
Chapter 14 Serial Communication Interface (S12SCIV5) 397
Chapter 15 Serial Peripheral Interface (S12SPIV5). 435
Chapter 16 Timer Module (TIM16B8CV2). 461
Chapter 17 Voltage Regulator (S12VREGL3V3V1) 489
Chapter 18 256 KByte Flash Module (S12XFTMR256K1V1). 507
Chapter 19 128 KByte Flash Module (S12XFTMR128K1V1). 557
Chapter 20 64 KByte Flash Module (S12XFTMR64K1V1). 607
Appendix A Electrical Characteristics 657
Appendix B Package Information 698
Appendix C PCB Layout Guidelines 708
Appendix D Derivative Differences 712
Appendix E Detailed Register Address Map 713
Appendix F Ordering Information 735

Chapter 1
Device Overview S12XS Family

1.1 Introduction . . . 19
1.1.1 Features . . . 19
1.1.2 Modes of Operation . . . 23
1.1.3 Block Diagram . . . 24
1.1.4 Device Memory Map . . . 25
1.1.5 Address Mapping . . . 26
1.1.6 Detailed Register Map . . . 28
1.1.7 Part ID Assignments . . . 28
1.2 Signal Description . . . 29
1.2.1 Device Pinout . . . 29
1.2.2 Pin Assignment Overview . . . 33
1.2.3 Detailed Signal Descriptions . . . 41
1.2.4 Power Supply Pins . . . 45
1.3 System Clock Description . . . 48
1.4 Modes of Operation . . . 49
1.4.1 Chip Configuration Summary . . . 49
1.4.2 Power Modes . . . 50
1.4.3 Freeze Mode . . . 51
1.5 Security . . . 51
1.6 Resets and Interrupts . . . 51
1.6.1 Resets . . . 51
1.6.2 Vectors . . . 51
1.6.3 Effects of Reset . . . 53
1.7 ATD0 Configuration . . . 55
1.7.1 External Trigger Input Connection . . . 55
1.7.2 ATD0 Channel[17] Connection . . . 55
1.8 VREG Configuration . . . 55
1.8.1 Temperature Sensor Configuration . . . 55
1.9 BDM Clock Configuration . . . 56
1.10 Oscillator Configuration . . . 56

Chapter 2
Port Integration Module (S12XSPIMV1)

2.1 Introduction . . . 59
2.1.1 Overview . . . 59
2.1.2 Features . . . 60
2.2 External Signal Description . . . 60
2.3 Memory Map and Register Definition . . . 64

2.3.1 Memory Map 65
2.3.2 Register Descriptions 73
2.3.3 Port A Data Register (PORTA) 75
2.3.4 Port B Data Register (PORTB) 75
2.3.5 Port A Data Direction Register (DDRA) 76
2.3.6 Port B Data Direction Register (DDRB) 76
2.3.7 PIM Reserved Registers 77
2.3.8 Port E Data Register (PORTE) 77
2.3.9 Port E Data Direction Register (DDRE) 78
2.3.10 Ports ABEK, BKGD pin Pull-up Control Register (PUCR) 79
2.3.11 Ports ABEK Reduced Drive Register (RDRIV) 80
2.3.12 ECLK Control Register (ECLKCTL) 81
2.3.13 PIM Reserved Register 82
2.3.14 IRQ Control Register (IRQCR) 83
2.3.15 PIM Reserved Register PIMTEST 83
2.3.16 Port K Data Register (PORTK) 84
2.3.17 Port K Data Direction Register (DDRK) 84
2.3.18 Port T Data Register (PTT) 85
2.3.19 Port T Input Register (PTIT) 86
2.3.20 Port T Data Direction Register (DDRT) 87
2.3.21 Port T Reduced Drive Register (RDRT) 87
2.3.22 Port T Pull Device Enable Register (PERT) 88
2.3.23 Port T Polarity Select Register (PPST) 88
2.3.24 PIM Reserved Register 89
2.3.25 Port T Routing Register (PTTRR) 89
2.3.26 Port S Data Register (PTS) 91
2.3.27 Port S Input Register (PTIS) 92
2.3.28 Port S Data Direction Register (DDRS) 93
2.3.29 Port S Reduced Drive Register (RDRS) 94
2.3.30 Port S Pull Device Enable Register (PERS) 94
2.3.31 Port S Polarity Select Register (PPSS) 95
2.3.32 Port S Wired-Or Mode Register (WOMS) 95
2.3.33 PIM Reserved Register 96
2.3.34 Port M Data Register (PTM) 96
2.3.35 Port M Input Register (PTIM) 98
2.3.36 Port M Data Direction Register (DDRM) 98
2.3.37 Port M Reduced Drive Register (RDRM) 99
2.3.38 Port M Pull Device Enable Register (PERM) 100
2.3.39 Port M Polarity Select Register (PPSM) 100
2.3.40 Port M Wired-Or Mode Register (WOMM) 101
2.3.41 Module Routing Register (MODRR) 101
2.3.42 Port P Data Register (PTP) 102
2.3.43 Port P Input Register (PTIP) 104
2.3.44 Port P Data Direction Register (DDRP) 105
2.3.45 Port P Reduced Drive Register (RDRP) 106

2.3.46 Port P Pull Device Enable Register (PERP) 106
2.3.47 Port P Polarity Select Register (PPSP) 107
2.3.48 Port P Interrupt Enable Register (PIEP) 107
2.3.49 Port P Interrupt Flag Register (PIFP) 108
2.3.50 Port H Data Register (PTH) 108
2.3.51 Port H Input Register (PTIH) 109
2.3.52 Port H Data Direction Register (DDRH) 109
2.3.53 Port H Reduced Drive Register (RDRH) 110
2.3.54 Port H Pull Device Enable Register (PERH) 110
2.3.55 Port H Polarity Select Register (PPSH) 111
2.3.56 Port H Interrupt Enable Register (PIEH) 111
2.3.57 Port H Interrupt Flag Register (PIFH) 112
2.3.58 Port J Data Register (PTJ) 112
2.3.59 Port J Input Register (PTIJ) 113
2.3.60 Port J Data Direction Register (DDRJ) 113
2.3.61 Port J Reduced Drive Register (RDRJ) 114
2.3.62 Port J Pull Device Enable Register (PERJ) 114
2.3.63 Port J Polarity Select Register (PPSJ) 115
2.3.64 Port J Interrupt Enable Register (PIEJ) 115
2.3.65 Port J Interrupt Flag Register (PIFJ) 116
2.3.66 Port AD0 Data Register 0 (PT0AD0) 116
2.3.67 Port AD0 Data Register 1 (PT1AD0) 117
2.3.68 Port AD0 Data Direction Register 0 (DDR0AD0) 117
2.3.69 Port AD0 Data Direction Register 1 (DDR1AD0) 118
2.3.70 Port AD0 Reduced Drive Register 0 (RDR0AD0) 118
2.3.71 Port AD0 Reduced Drive Register 1 (RDR1AD0) 119
2.3.72 Port AD0 Pull Up Enable Register 0 (PER0AD0) 119
2.3.73 Port AD0 Pull Up Enable Register 1 (PER1AD0) 120
2.3.74 PIM Reserved Registers 120
2.4 Functional Description 120
2.4.1 General 120
2.4.2 Registers 121
2.4.3 Pins and Ports 123
2.4.4 Pin interrupts 125
2.5 Initialization Information 126
2.5.1 Port Data and Data Direction Register writes 126

Chapter 3
Memory Mapping Control (S12XMMCV4)

3.1 Introduction 127
3.1.1 Terminology 128
3.1.2 Features 128
3.1.3 S12X Memory Mapping 129
3.1.4 Modes of Operation 129
3.1.5 Block Diagram 129

3.2 External Signal Description 130
3.3 Memory Map and Registers 131
3.3.1 Module Memory Map 131
3.3.2 Register Descriptions 131
3.4 Functional Description 140
3.4.1 MCU Operating Mode 140
3.4.2 Memory Map Scheme 140
3.4.3 Chip Bus Control 147
3.5 Initialization/Application Information 148
3.5.1 CALL and RTC Instructions 148

Chapter 4
Interrupt (S12XINTV2)

4.1 Introduction 151
4.1.1 Glossary 152
4.1.2 Features 152
4.1.3 Modes of Operation 153
4.1.4 Block Diagram 154
4.2 External Signal Description 154
4.3 Memory Map and Register Definition 155
4.3.1 Module Memory Map 155
4.3.2 Register Descriptions 156
4.4 Functional Description 161
4.4.1 S12X Exception Requests 162
4.4.2 Interrupt Prioritization 162
4.4.3 XGATE Requests 163
4.4.4 Priority Decoders 163
4.4.5 Reset Exception Requests 164
4.4.6 Exception Priority 164
4.5 Initialization/Application Information 165
4.5.1 Initialization 165
4.5.2 Interrupt Nesting 165
4.5.3 Wake Up from Stop or Wait Mode 166

Chapter 5
Background Debug Module (S12XBDMV2)

5.1 Introduction 169
5.1.1 Features 169
5.1.2 Modes of Operation 170
5.1.3 Block Diagram 171
5.2 External Signal Description 171
5.3 Memory Map and Register Definition 172
5.3.1 Module Memory Map 172
5.3.2 Register Descriptions 172

5.3.3 Family ID Assignment 177
5.4 Functional Description 177
5.4.1 Security 178
5.4.2 Enabling and Activating BDM 178
5.4.3 BDM Hardware Commands 179
5.4.4 Standard BDM Firmware Commands 180
5.4.5 BDM Command Structure 181
5.4.6 BDM Serial Interface 183
5.4.7 Serial Interface Hardware Handshake Protocol 186
5.4.8 Hardware Handshake Abort Procedure 188
5.4.9 SYNC — Request Timed Reference Pulse 191
5.4.10 Instruction Tracing 192
5.4.11 Serial Communication Time Out 193

Chapter 6
S12X Debug (S12XDBGV3) Module

6.1 Introduction 195
6.1.1 Glossary 195
6.1.2 Overview 196
6.1.3 Features 196
6.1.4 Modes of Operation 197
6.1.5 Block Diagram 198
6.2 External Signal Description 198
6.3 Memory Map and Registers 198
6.3.1 Module Memory Map 198
6.3.2 Register Descriptions 199
6.4 Functional Description 215
6.4.1 S12XDBG Operation 216
6.4.2 Comparator Modes 216
6.4.3 Trigger Modes 220
6.4.4 State Sequence Control 221
6.4.5 Trace Buffer Operation 222
6.4.6 Tagging 228
6.4.7 Breakpoints 228

Chapter 7
Security (S12XS9SECV2)

7.1 Introduction 231
7.1.1 Features 231
7.1.2 Modes of Operation 232
7.1.3 Securing the Microcontroller 232
7.1.4 Operation of the Secured Microcontroller 233
7.1.5 Unsecuring the Microcontroller 235
7.1.6 Reprogramming the Security Bits 235

7.1.7 Complete Memory Erase (Special Modes) 236

Chapter 8
S12XE Clocks and Reset Generator (S12XECRGV1)

8.1 Introduction 237
8.1.1 Features 237
8.1.2 Modes of Operation 238
8.1.3 Block Diagram 238
8.2 Signal Description 239
8.2.1 V_{DDPLL}, V_{SSPLL} 239
8.2.2 $\overline{RESET}$ 239
8.3 Memory Map and Registers 240
8.3.1 Module Memory Map 240
8.3.2 Register Descriptions 241
8.4 Functional Description 254
8.4.1 Functional Blocks 254
8.4.2 Operation Modes 259
8.4.3 Low Power Options 260
8.5 Resets 262
8.5.1 Description of Reset Operation 263
8.6 Interrupts 265
8.6.1 Description of Interrupt Operation 266

Chapter 9
Pierce Oscillator (S12XOSCLCPV2)

9.1 Introduction 267
9.1.1 Features 267
9.1.2 Modes of Operation 267
9.1.3 Block Diagram 268
9.2 External Signal Description 268
9.2.1 V_{DDPLL} and V_{SSPLL} — Operating and Ground Voltage Pins 268
9.2.2 EXTAL and XTAL — Input and Output Pins 268
9.3 Memory Map and Register Definition 270
9.4 Functional Description 270
9.4.1 Gain Control 270
9.4.2 Clock Monitor 270
9.4.3 Wait Mode Operation 270
9.4.4 Stop Mode Operation 270

Chapter 10
Analog-to-Digital Converter (ADC12B16CV1)

10.1 Introduction 271
10.1.1 Features 271
10.1.2 Modes of Operation 272

10.1.3 Block Diagram 273
10.1.4 Block Diagram of Input structure 274
10.2 Signal Description 275
10.2.1 Detailed Signal Descriptions 275
10.3 Memory Map and Register Definition 275
10.3.1 Module Memory Map 275
10.3.2 Register Descriptions 277
10.4 Functional Description 292
10.4.1 Analog Sub-Block 292
10.4.2 Digital Sub-Block 293
10.5 Resets 294
10.6 Interrupts 294

Chapter 11
Freescale's Scalable Controller Area Network (S12MSCANV3)

11.1 Introduction 295
11.1.1 Glossary 296
11.1.2 Block Diagram 296
11.1.3 Features 297
11.1.4 Modes of Operation 297
11.2 External Signal Description 298
11.2.1 RXCAN — CAN Receiver Input Pin 298
11.2.2 TXCAN — CAN Transmitter Output Pin 298
11.2.3 CAN System 298
11.3 Memory Map and Register Definition 299
11.3.1 Module Memory Map 299
11.3.2 Register Descriptions 301
11.3.3 Programmer's Model of Message Storage 320
11.4 Functional Description 331
11.4.1 General 331
11.4.2 Message Storage 331
11.4.3 Identifier Acceptance Filter 334
11.4.4 Modes of Operation 340
11.4.5 Low-Power Options 342
11.4.6 Reset Initialization 346
11.4.7 Interrupts 346
11.5 Initialization/Application Information 348
11.5.1 MSCAN initialization 348
11.5.2 Bus-Off Recovery 348

Chapter 12
Periodic Interrupt Timer (S12PIT24B4CV1)

12.1 Introduction 349
12.1.1 Glossary 349

12.1.2 Features . . . 349
12.1.3 Modes of Operation . . . 349
12.1.4 Block Diagram . . . 350
12.2 External Signal Description . . . 350
12.3 Register Definition . . . 351
12.4 Functional Description . . . 360
12.4.1 Timer . . . 360
12.4.2 Interrupt Interface . . . 361
12.4.3 Hardware Trigger . . . 362
12.5 Initialization . . . 362
12.5.1 Startup . . . 362
12.5.2 Shutdown . . . 362
12.5.3 Flag Clearing . . . 362
12.6 Application Information . . . 363

Chapter 13
Pulse-Width Modulator (S12PWM8B8CV1)

13.1 Introduction . . . 365
13.1.1 Features . . . 365
13.1.2 Modes of Operation . . . 366
13.1.3 Block Diagram . . . 366
13.2 External Signal Description . . . 366
13.2.1 PWM7 — PWM Channel 7 . . . 367
13.2.2 PWM6 — PWM Channel 6 . . . 367
13.2.3 PWM5 — PWM Channel 5 . . . 367
13.2.4 PWM4 — PWM Channel 4 . . . 367
13.2.5 PWM3 — PWM Channel 3 . . . 367
13.2.6 PWM3 — PWM Channel 2 . . . 367
13.2.7 PWM3 — PWM Channel 1 . . . 367
13.2.8 PWM3 — PWM Channel 0 . . . 367
13.3 Memory Map and Register Definition . . . 367
13.3.1 Module Memory Map . . . 367
13.3.2 Register Descriptions . . . 368
13.4 Functional Description . . . 383
13.4.1 PWM Clock Select . . . 383
13.4.2 PWM Channel Timers . . . 386
13.5 Resets . . . 394
13.6 Interrupts . . . 395

Chapter 14
Serial Communication Interface (S12SCIV5)

14.1 Introduction . . . 397
14.1.1 Glossary . . . 397
14.1.2 Features . . . 398

14.1.3 Modes of Operation . . . 398
14.1.4 Block Diagram . . . 399
14.2 External Signal Description . . . 400
14.2.1 TXD — Transmit Pin . . . 400
14.2.2 RXD — Receive Pin . . . 400
14.3 Memory Map and Register Definition . . . 400
14.3.1 Module Memory Map and Register Definition . . . 400
14.3.2 Register Descriptions . . . 401
14.4 Functional Description . . . 413
14.4.1 Infrared Interface Submodule . . . 414
14.4.2 LIN Support . . . 414
14.4.3 Data Format . . . 415
14.4.4 Baud Rate Generation . . . 416
14.4.5 Transmitter . . . 417
14.4.6 Receiver . . . 422
14.4.7 Single-Wire Operation . . . 430
14.4.8 Loop Operation . . . 431
14.5 Initialization/Application Information . . . 431
14.5.1 Reset Initialization . . . 431
14.5.2 Modes of Operation . . . 431
14.5.3 Interrupt Operation . . . 432
14.5.4 Recovery from Wait Mode . . . 434
14.5.5 Recovery from Stop Mode . . . 434

Chapter 15
Serial Peripheral Interface (S12SPIV5)

15.1 Introduction . . . 435
15.1.1 Glossary of Terms . . . 435
15.1.2 Features . . . 435
15.1.3 Modes of Operation . . . 435
15.1.4 Block Diagram . . . 436
15.2 External Signal Description . . . 437
15.2.1 MOSI — Master Out/Slave In Pin . . . 437
15.2.2 MISO — Master In/Slave Out Pin . . . 437
15.2.3 $\overline{SS}$ — Slave Select Pin . . . 438
15.2.4 SCK — Serial Clock Pin . . . 438
15.3 Memory Map and Register Definition . . . 438
15.3.1 Module Memory Map . . . 438
15.3.2 Register Descriptions . . . 439
15.4 Functional Description . . . 447
15.4.1 Master Mode . . . 448
15.4.2 Slave Mode . . . 449
15.4.3 Transmission Formats . . . 450
15.4.4 SPI Baud Rate Generation . . . 455
15.4.5 Special Features . . . 456

15.4.6 Error Conditions 457
15.4.7 Low Power Mode Options 458

Chapter 16
Timer Module (TIM16B8CV2)

16.1 Introduction 461
16.1.1 Features 461
16.1.2 Modes of Operation 462
16.1.3 Block Diagrams 463
16.2 External Signal Description 465
16.2.1 IOC7 — Input Capture and Output Compare Channel 7 Pin 465
16.2.2 IOC6 — Input Capture and Output Compare Channel 6 Pin 465
16.2.3 IOC5 — Input Capture and Output Compare Channel 5 Pin 465
16.2.4 IOC4 — Input Capture and Output Compare Channel 4 Pin 465
16.2.5 IOC3 — Input Capture and Output Compare Channel 3 Pin 465
16.2.6 IOC2 — Input Capture and Output Compare Channel 2 Pin 465
16.2.7 IOC1 — Input Capture and Output Compare Channel 1 Pin 466
16.2.8 IOC0 — Input Capture and Output Compare Channel 0 Pin 466
16.3 Memory Map and Register Definition 466
16.3.1 Module Memory Map 466
16.3.2 Register Descriptions 466
16.4 Functional Description 483
16.4.1 Prescaler 484
16.4.2 Input Capture 485
16.4.3 Output Compare 485
16.4.4 Pulse Accumulator 486
16.4.5 Event Counter Mode 486
16.4.6 Gated Time Accumulation Mode 487
16.5 Resets 487
16.6 Interrupts 487
16.6.1 Channel [7:0] Interrupt (C[7:0]F) 488
16.6.2 Pulse Accumulator Input Interrupt (PAOVI) 488
16.6.3 Pulse Accumulator Overflow Interrupt (PAOVF) 488
16.6.4 Timer Overflow Interrupt (TOF) 488

Chapter 17
Voltage Regulator (S12VREGL3V3V1)

17.1 Introduction 489
17.1.1 Features 489
17.1.2 Modes of Operation 489
17.1.3 Block Diagram 490
17.2 External Signal Description 492
17.2.1 VDDR — Regulator Power Input Pins 492
17.2.2 VDDA, VSSA — Regulator Reference Supply Pins 492

17.2.3 VDD, VSS — Regulator Output1 (Core Logic) Pins 492
17.2.4 VDDF — Regulator Output2 (NVM Logic) Pins 493
17.2.5 VDDPLL, VSSPLL — Regulator Output3 (PLL) Pins 493
17.2.6 VDDX — Power Input Pin 493
17.2.7 V_{REGEN} — Optional Regulator Enable Pin 493
17.2.8 V_{REG_API} — Optional Autonomous Periodical Interrupt Output Pin 493
17.3 Memory Map and Register Definition 493
17.3.1 Module Memory Map 494
17.3.2 Register Descriptions 495
17.4 Functional Description 502
17.4.1 General 502
17.4.2 Regulator Core (REG) 502
17.4.3 Low-Voltage Detect (LVD) 502
17.4.4 Power-On Reset (POR) 502
17.4.5 Low-Voltage Reset (LVR) 502
17.4.6 HTD - High Temperature Detect 503
17.4.7 Regulator Control (CTRL) 503
17.4.8 Autonomous Periodical Interrupt (API) 503
17.4.9 Resets 504
17.4.10 Description of Reset Operation 504
17.4.11 Interrupts 504

Chapter 18
256 KByte Flash Module (S12XFTMR256K1V1)

18.1 Introduction 507
18.1.1 Glossary 508
18.1.2 Features 508
18.1.3 Block Diagram 509
18.2 External Signal Description 510
18.3 Memory Map and Registers 510
18.3.1 Module Memory Map 511
18.3.2 Register Descriptions 514
18.4 Functional Description 535
18.4.1 Flash Command Operations 535
18.4.2 Flash Command Description 540
18.4.3 Interrupts 553
18.4.4 Wait Mode 554
18.4.5 Stop Mode 554
18.5 Security 554
18.5.1 Unsecuring the MCU using Backdoor Key Access 554
18.5.2 Unsecuring the MCU in Special Single Chip Mode using BDM 555
18.5.3 Mode and Security Effects on Flash Command Availability 556
18.6 Initialization 556

Chapter 19
128 KByte Flash Module (S12XFTMR128K1V1)

19.1 Introduction . . . 557
19.1.1 Glossary . . . 558
19.1.2 Features . . . 558
19.1.3 Block Diagram . . . 559
19.2 External Signal Description . . . 560
19.3 Memory Map and Registers . . . 560
19.3.1 Module Memory Map . . . 561
19.3.2 Register Descriptions . . . 564
19.4 Functional Description . . . 585
19.4.1 Flash Command Operations . . . 585
19.4.2 Flash Command Description . . . 590
19.4.3 Interrupts . . . 603
19.4.4 Wait Mode . . . 604
19.4.5 Stop Mode . . . 604
19.5 Security . . . 604
19.5.1 Unsecuring the MCU using Backdoor Key Access . . . 604
19.5.2 Unsecuring the MCU in Special Single Chip Mode using BDM . . . 605
19.5.3 Mode and Security Effects on Flash Command Availability . . . 606
19.6 Initialization . . . 606

Chapter 20
64 KByte Flash Module (S12XFTMR64K1V1)

20.1 Introduction . . . 607
20.1.1 Glossary . . . 608
20.1.2 Features . . . 608
20.1.3 Block Diagram . . . 610
20.2 External Signal Description . . . 610
20.3 Memory Map and Registers . . . 611
20.3.1 Module Memory Map . . . 611
20.3.2 Register Descriptions . . . 615
20.4 Functional Description . . . 635
20.4.1 Flash Command Operations . . . 635
20.4.2 Flash Command Description . . . 640
20.4.3 Interrupts . . . 653
20.4.4 Wait Mode . . . 654
20.4.5 Stop Mode . . . 654
20.5 Security . . . 654
20.5.1 Unsecuring the MCU using Backdoor Key Access . . . 655
20.5.2 Unsecuring the MCU in Special Single Chip Mode using BDM . . . 655
20.5.3 Mode and Security Effects on Flash Command Availability . . . 656
20.6 Initialization . . . 656

Appendix A
Electrical Characteristics

A.1 General . . . 657
A.1.1 Parameter Classification . . . 657
A.1.2 Power Supply . . . 657
A.1.3 Pins . . . 658
A.1.4 Current Injection . . . 659
A.1.5 Absolute Maximum Ratings . . . 659
A.1.6 ESD Protection and Latch-up Immunity . . . 660
A.1.7 Operating Conditions . . . 661
A.1.8 Power Dissipation and Thermal Characteristics . . . 662
A.1.9 I/O Characteristics . . . 666
A.1.10 Supply Currents . . . 669
A.2 ATD Characteristics . . . 673
A.2.1 ATD Operating Characteristics . . . 673
A.2.2 Factors Influencing Accuracy . . . 673
A.2.3 ATD Accuracy . . . 675
A.3 NVM, Flash . . . 679
A.3.1 Timing Parameters . . . 679
A.3.2 NVM Reliability Parameters . . . 683
A.4 Voltage Regulator . . . 685
A.5 Output Loads . . . 686
A.5.1 Resistive Loads . . . 686
A.5.2 Capacitive Loads . . . 686
A.5.3 Chip Power-up and Voltage Drops . . . 686
A.6 Reset, Oscillator and PLL . . . 688
A.6.1 Startup . . . 688
A.6.2 Oscillator . . . 690
A.6.3 Phase Locked Loop . . . 691
A.7 MSCAN . . . 693
A.8 SPI Timing . . . 694
A.8.1 Master Mode . . . 694
A.8.2 Slave Mode . . . 696

Appendix B
Package Information

B.1 112-pin LQFP Mechanical Dimensions . . . 699
B.2 80-Pin QFP Mechanical Dimensions . . . 702
B.3 64-Pin LQFP Mechanical Dimensions . . . 705

Appendix C
PCB Layout Guidelines

C.1 General . . . 708
C.1.1 112-Pin LQFP Recommended PCB Layout . . . 709

C.1.2 80-Pin QFP Recommended PCB Layout 710
C.1.3 64-Pin LQFP Recommended PCB Layout 711

Appendix D
Derivative Differences

D.1 Memory Sizes and Package Options S12XS family 712

Appendix E
Detailed Register Address Map

E.1 Detailed Register Map. 713

Appendix F
Ordering Information

F.1 Ordering Information 735

Chapter 1
Device Overview S12XS Family

1.1 Introduction

The new S12XS family of 16-bit micro controllers is a compatible, reduced version of the S12XE family. These families provide an easy approach to develop common platforms from low-end to high-end applications, minimizing the redesign of software and hardware.

Targeted at generic automotive applications and CAN nodes, some typical examples of these applications are: Body Controllers, Occupant Detection, Door Modules, RKE Receivers, Smart Actuators, Lighting Modules and Smart Junction Boxes amongst many others.

The S12XS family retains many of the features of the S12XE family including Error Correction Code (ECC) on Flash memory, a separate Data-Flash Module for code or data storage, a Frequency Modulated Locked Loop (IPLL) that improves the EMC performance and a fast ATD converter.

S12XS family delivers 32-bit performance with all the advantages and efficiencies of a 16-bit MCU while retaining the low cost, power consumption, EMC and code-size efficiency advantages currently enjoyed by users of Freescale's existing 16-bit S12 and S12X MCU families. Like members of other S12X families, the S12XS family runs 16-bit wide accesses without wait states for all peripherals and memories.

The S12XS family is available in 112-pin LQFP, 80-pin QFP, 64-pin LQFP package options and maintains a high level of pin compatibility with the S12XE family. In addition to the I/O ports available in each module, up to 18 further I/O ports are available with interrupt capability allowing Wake-Up from stop or wait modes.

The peripheral set includes MSCAN, SPI, two SCIs, an 8-channel 24-bit periodic interrupt timer, 8-channel 16-bit Timer, 8-channel PWM and up to 16- channel 12-bit ATD converter.

Software controlled peripheral-to-port routing enables access to a flexible mix of the peripheral modules in the lower pin count package options.

1.1.1 Features

Features of the S12XS Family are listed here. Please see Table D-1 for memory options and Table D-2 for the peripheral features that are available on the different family members.

- 16-bit CPU12X
  - Upward compatible with S12 instruction set with the exception of five Fuzzy instructions (MEM, WAV, WAVR, REV, REVW) which have been removed
  - Enhanced indexed addressing
  - Access to large data segments independent of PPAGE

- INT (interrupt module)
  - Seven levels of nested interrupts
  - Flexible assignment of interrupt sources to each interrupt level.
  - External non-maskable high priority interrupt (XIRQ)
  - The following inputs can act as Wake-up Interrupts
    - IRQ and non-maskable XIRQ
    - CAN receive pins
    - SCI receive pins
    - Depending on the package option up to 20 pins on ports J, H and P configurable as rising or falling edge sensitive
- MMC (module mapping control)
- DBG (debug module)
  - Monitoring of CPU bus with tag-type or force-type breakpoint requests
  - 64 x 64-bit circular trace buffer captures change-of-flow or memory access information
- BDM (background debug mode)
- OSC_LCP (oscillator)
  - Low power loop control Pierce oscillator utilizing a 4MHz to 16MHz crystal
  - Good noise immunity
  - Full-swing Pierce option utilizing a 2MHz to 40MHz crystal
  - Transconductance sized for optimum start-up margin for typical crystals
- IPLL (Internally filtered, frequency modulated phase-locked-loop clock generation)
  - No external components required
  - Configurable option to spread spectrum for reduced EMC radiation (frequency modulation)
- CRG (clock and reset generation)
  - COP watchdog
  - Real time interrupt
  - Clock monitor
  - Fast wake up from STOP in self clock mode
- Memory Options
  - 64, 128 and 256 Kbyte Flash
  - Flash General Features
    - 64 data bits plus 8 syndrome ECC (Error Correction Code) bits allow single bit failure correction and double fault detection
    - Erase sector size 1024 bytes
    - Automated program and erase algorithm
    - Protection scheme to prevent accidental program or erase
    - Security option to prevent unauthorized access
    - Sense-amp margin level setting for reads
  - 4 and 8 Kbyte Data Flash space

  - 16 data bits plus 6 syndrome ECC (Error Correction Code) bits allow single bit failure correction and double fault detection
  - Erase sector size 256 bytes
  - Automated program and erase algorithm
- 4, 8 and 12 Kbyte RAM

- 16-channel, 12-bit Analog-to-Digital converter
  - 8/10/12 Bit resolution
  - 3µs, 10-bit single conversion time
  - Left or right justified result data
  - External and internal conversion trigger capability
  - Internal oscillator for conversion in Stop modes
  - Wake from low power modes on analog comparison > or <= match
  - Continuous conversion mode
  - Multiplexer for 16 analog input channels
  - Multiple channel scans
  - Pins can also be used as digital I/O
- MSCAN (1 M bit per second, CAN 2.0 A, B software compatible module)
  - 1 Mbit per second, CAN 2.0 A, B software compatible module
    - Standard and extended data frames
    - 0 - 8 bytes data length
    - Programmable bit rate up to 1 Mbps
  - Five receive buffers with FIFO storage scheme
  - Three transmit buffers with internal prioritization
  - Flexible identifier acceptance filter programmable as:
    - 2 x 32-bit
    - 4 x 16-bit
    - 8 x 8-bit
  - Wake-up with integrated low pass filter option
  - Loop back for self test
  - Listen-only mode to monitor CAN bus
  - Bus-off recovery by software intervention or automatically
  - 16-bit time stamp of transmitted/received messages
- TIM (standard timer module)
  - 8 x 16-bit channels for input capture or output compare
  - 16-bit free-running counter with 8-bit precision prescaler
  - 1 x 16-bit pulse accumulator
- PIT (periodic interrupt timer)
  - Up to four timers with independent time-out periods
  - Time-out periods selectable between 1 and 2^{24} bus clock cycles

  - Time-out interrupt and peripheral triggers
  - Start of timers can be aligned
- Up to 8 channel x 8-bit or 4 channel x 16-bit Pulse Width Modulator
  - Programmable period and duty cycle per channel
  - Center- or left-aligned outputs
  - Programmable clock select logic with a wide range of frequencies
- Serial Peripheral Interface Module (SPI)
  - Configurable for 8 or 16-bit data size
  - Full-duplex or single-wire bidirectional
  - Double-buffered transmit and receive
  - Master or Slave mode
  - MSB-first or LSB-first shifting
  - Serial clock phase and polarity options
- Two Serial Communication Interfaces (SCI)
  - Full-duplex or single wire operation
  - Standard mark/space non-return-to-zero (NRZ) format
  - Selectable IrDA 1.4 return-to-zero-inverted (RZI) format with programmable pulse widths
  - 13-bit baud rate selection
  - Programmable character length
  - Programmable polarity for transmitter and receiver
  - Receive wakeup on active edge
  - Break detect and transmit collision detect supporting LIN
- On-Chip Voltage Regulator
  - Two parallel, linear voltage regulators with bandgap reference
  - Low-voltage detect (LVD) with low-voltage interrupt (LVI)
  - Power-on reset (POR) circuit
  - Low-voltage reset (LVR)
- Low-power wake-up timer (API)
  - Internal oscillator driving a down counter
  - Trimmable to +/-5% accuracy
  - Time-out periods range from 0.2ms to ~13s with a 0.2ms resolution
- Input/Output
  - Up to 91 general-purpose input/output (I/O) pins depending on the package option and 2 input-only pins
  - Hysteresis and configurable pull up/pull down device on all input pins
  - Configurable drive strength on all output pins
- Package Options
  - 112-pin low-profile quad flat-pack (LQFP)
  - 80-pin quad flat-pack (QFP)

  - 64-pin low-profile quad flat-pack (LQFP)
- Operating Conditions
  - Wide single Supply Voltage range 3.135 V to 5.5 V at full performance
    - Separate supply for internal voltage regulator and I/O allow optimized EMC filtering
  - 40MHz maximum CPU bus frequency
  - Ambient temperature range –40°C to 125°C
  - Temperature Options:
    - –40°C to 85°C
    - –40°C to 105°C
    - –40°C to 125°C

1.1.2 Modes of Operation

Operating modes:

- Normal single-chip mode
- Special single-chip mode with active background debug mode

NOTE

This chip family does not support external bus modes.

Low-power modes:

- System stop modes
  - Pseudo stop mode
  - Full stop mode with fast wake-up option
- System wait mode

1.1.3 Block Diagram

Figure 1-1 shows a block diagram of the S12XS Family devices

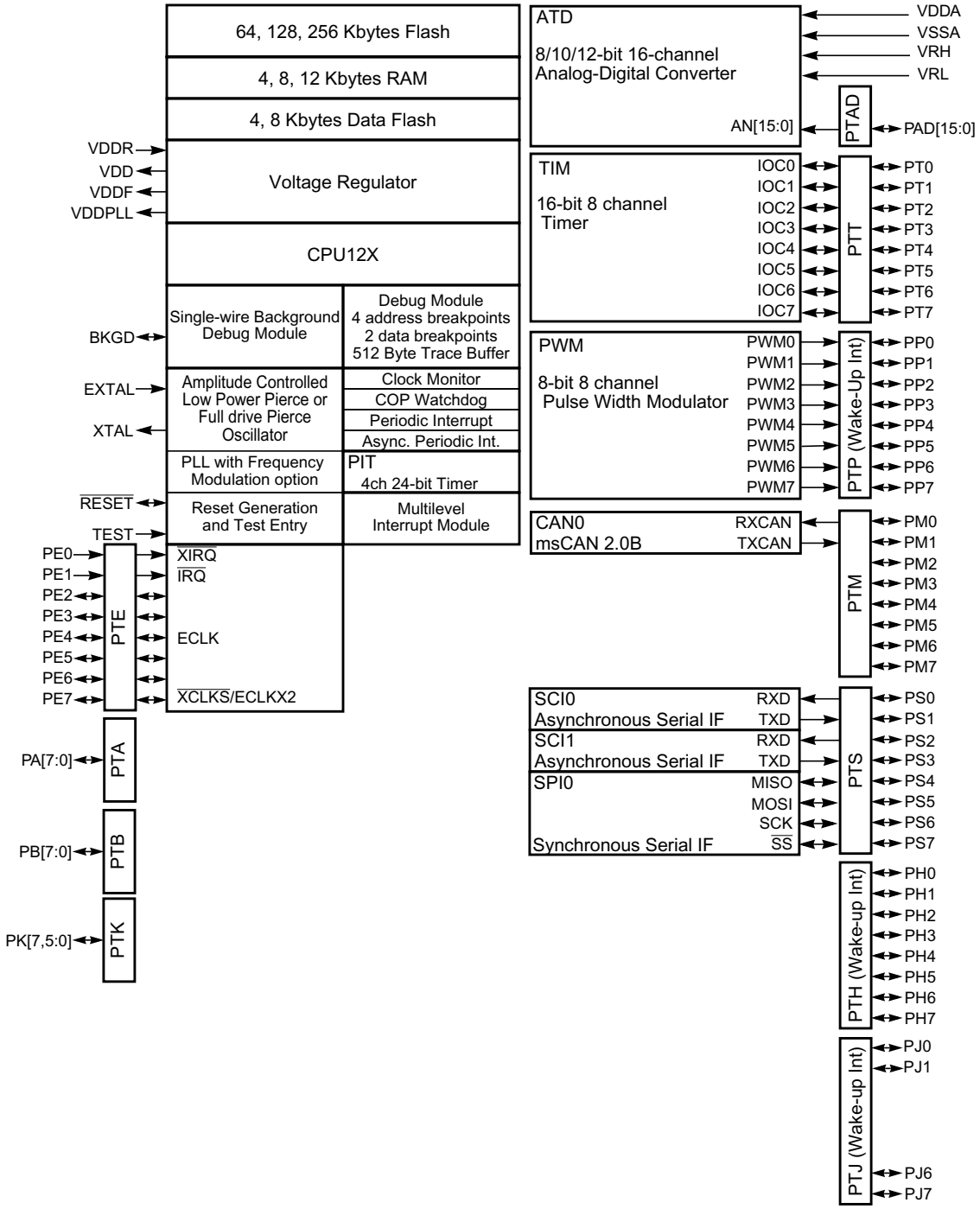

Figure 1-1. S12XS Family Block Diagram

1.1.4 Device Memory Map

Table 1-1 shows the device register memory map.

Table 1-1. Device Register Memory Map

Address	Module	Size (Bytes)
0x0000–0x0009	PIM (port integration module)	10
0x000A–0x000B	MMC (memory map control)	2
0x000C–0x000D	PIM (port integration module)	2
0x000E–0x000F	Reserved	2
0x0010–0x0017	MMC (memory map control)	8
0x0018–0x0019	Reserved	2
0x001A–0x001B	Device ID register	2
0x001C–0x001F	PIM (port integration module)	4
0x0020–0x002F	DBG (debug module)	16
0x0030–0x0031	Reserved	2
0x0032–0x0033	PIM (port integration module)	2
0x0034–0x003F	ECRG (clock and reset generator)	12
0x0040–0x006F	TIM (timer module)	48
0x0070–0x00C7	Reserved	88
0x00C8–0x00CF	SCI0 (serial communications interface)	8
0x00D0–0x00D7	SCI1 (serial communications interface)	8
0x00D8–0x00DF	SPI0 (serial peripheral interface)	8
0x00E0–0x00FF	Reserved	32
0x0100–0x0113	FTMR control registers	20
0x0114–0x011F	Reserved	12
0x0120–0x012F	INT (interrupt module)	16
0x0130–0x013F	Reserved	16
0x0140–0x017F	CAN0	64
0x0180–0x023F	Reserved	192
0x0240–0x027F	PIM (port integration module)	64
0x0280–0x02BF	Reserved	64
0x02C0–0x02EF	ATD0 (analog-to-digital converter 12 bit 16-channel)	48
0x02F0–0x02F7	Voltage regulator	8
0x02F8–0x02FF	Reserved	8
0x0300–0x0327	PWM (pulse-width modulator 8 channels)	40
0x0328–0x033F	Reserved	24
0x0340–0x0367	PIT (periodic interrupt timer)	40

Table 1-1. Device Register Memory Map (continued)

Address	Module	Size (Bytes)
0x0368–0x07FF	Reserved	1176

NOTE

Reserved register space shown in Table 1-1 is not allocated to any module. This register space is reserved for future use. Writing to these locations has no effect. Read access to these locations returns zero.

1.1.5 Address Mapping

Figure 1-2 shows S12XS CPU and BDM local address translation to the global memory map. It indicates also the location of the internal resources in the memory map.

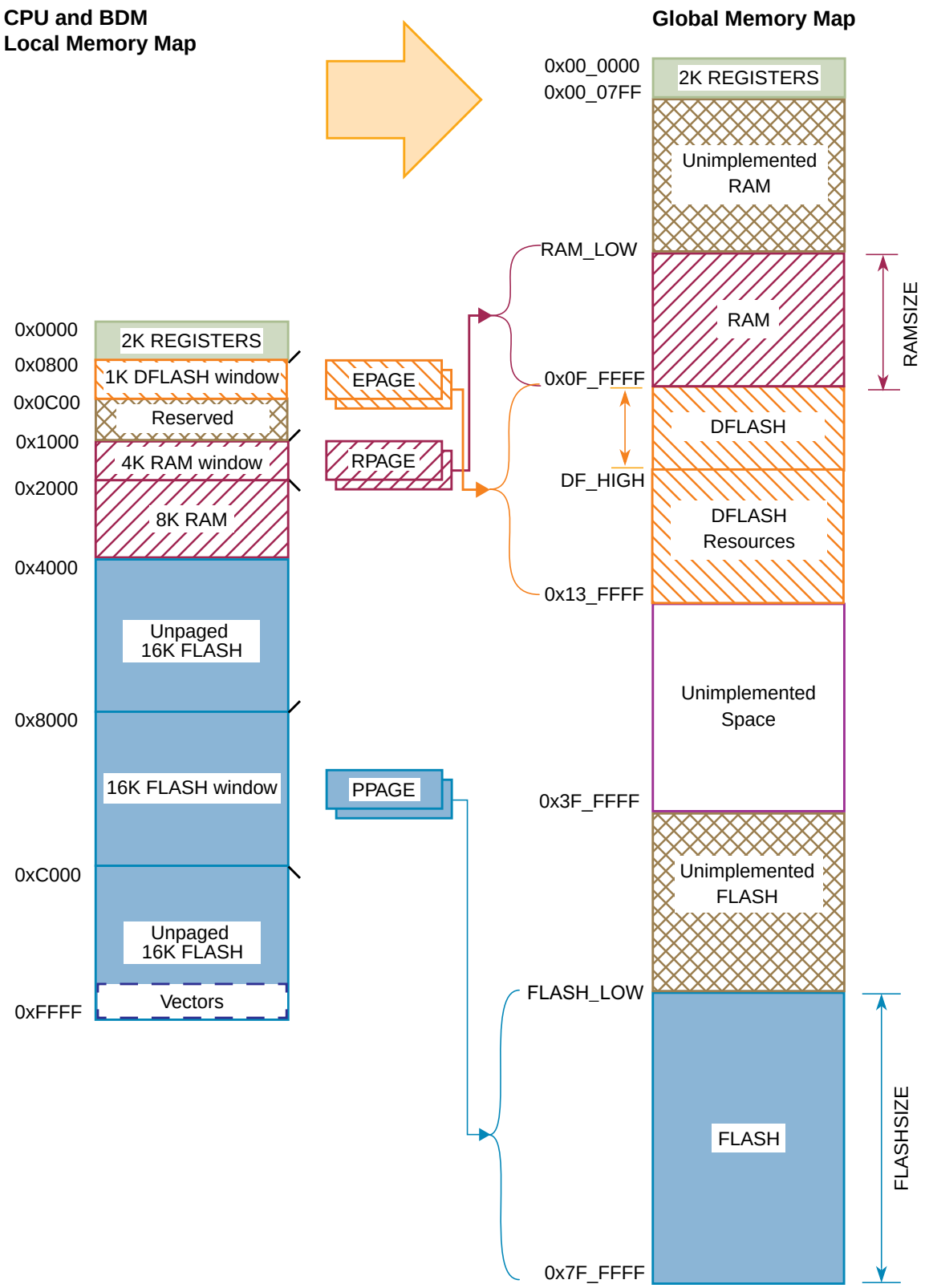

Figure 1-2. S12XS Family Global Memory Map

Accessing the reserved area in the range of 0x0C00 to 0x0FFF will return undefined data values.

A CPU access to any unimplemented space causes an illegal address reset.

The range between 0x10_0000 and 0x13_FFFF is mapped to DFLASH (Data Flash). The DFLASH block sizes are listed in Table 1-2.

Table 1-2. Derivative Dependent Memory Parameters of Device Internal Resources

Device	FLASH_LOW	SIZE/ PPAGE[1]	RAM_LOW	SIZE/ RPAGE[2]	DF_HIGH	SIZE/ EPAGE[3]
S12XS256	0x7C_0000	256K / 16	0x0F_D000	12K / 3	0x10_1FFF	8K / 8
S12XS128	0x7E_0000	128K / 8	0x0F_E000	8K / 2	0x10_1FFF	8K / 8
S12XS64	0x7F_0000	64K / 4	0x0F_F000	4K / 1	0x10_0FFF	4K / 4

1 Number of 16K pages addressable via PPAGE register
2 Number of 4K pages addressing the RAM via PPAGE register
3 Number of 1K pages addressing the DFLASH via the EPAGE register starting upwards from 0x00

1.1.6 Detailed Register Map

The detailed register map is listed in the appendix of the reference manual.

1.1.7 Part ID Assignments

The part ID is located in two 8-bit registers PARTIDH and PARTIDL (addresses 0x001A and 0x001B). The read-only value is a unique part ID for each revision of the chip. Table 1-3 shows the assigned part ID number and Mask Set number.

The Version ID is a word located in a flash information row at 0x40_00E8. The version ID number indicates a specific version of internal NVM variables used to patch NVM errata. The default is no patch (0xFFFF).

Table 1-3. Assigned Part ID Numbers

Device	Mask Set Number	Part ID[1]	Version ID
MC9S12XS256	0M05M	$C0C0	0xFFFF
MC9S12XS128	0M04M	$C1C0	0xFFFF
	1M04M	$C1C1	0xFFFF
MC9S12XS64	0M04M	$C1C0	0xFFFF
	1M04M	$C1C1	0xFFFF

1 The coding is as follows:
Bit 15-12: Major family identifier
Bit 11-6: Minor family identifier
Bit 5-4: Major mask set revision number including FAB transfers
Bit 3-0: Minor — non full — mask set revision

1.2 Signal Description

This section describes signals that connect off-chip. It includes a pinout diagram, a table of signal properties, and detailed discussion of signals. It is built from the signal description sections of the individual IP blocks on the device.

1.2.1 Device Pinout

The XS family of devices offers pin-compatible packaged devices to assist with system development and accommodate expansion of the application.

The S12XS family devices are offered in the following package options:

- 112-pin LQFP
- 80-pin QFP
- 64-pin LQFP

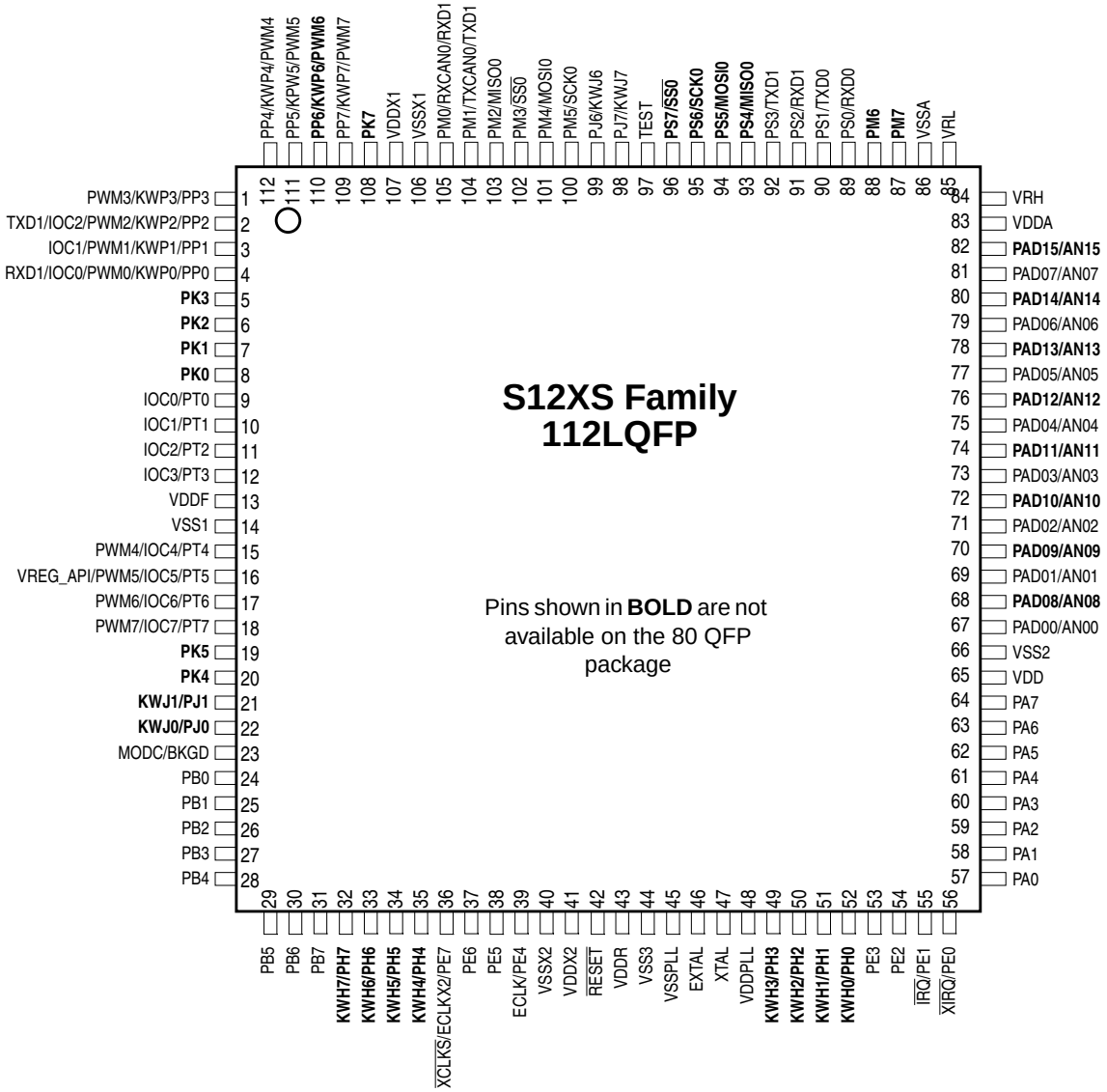

Figure 1-3. S12XS Family Pin Assignments 112-pin LQFP Package

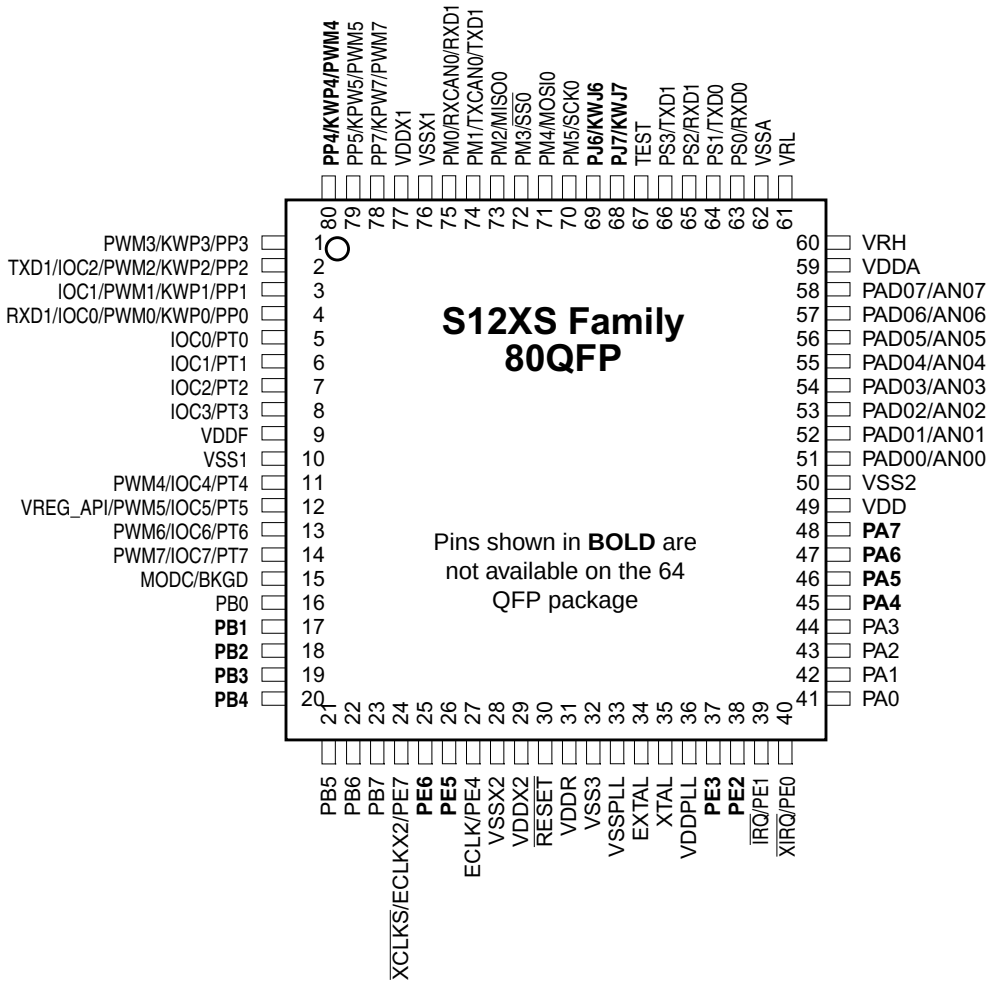

Figure 1-4. S12XS Family Pin Assignments 80-pin QFP Package

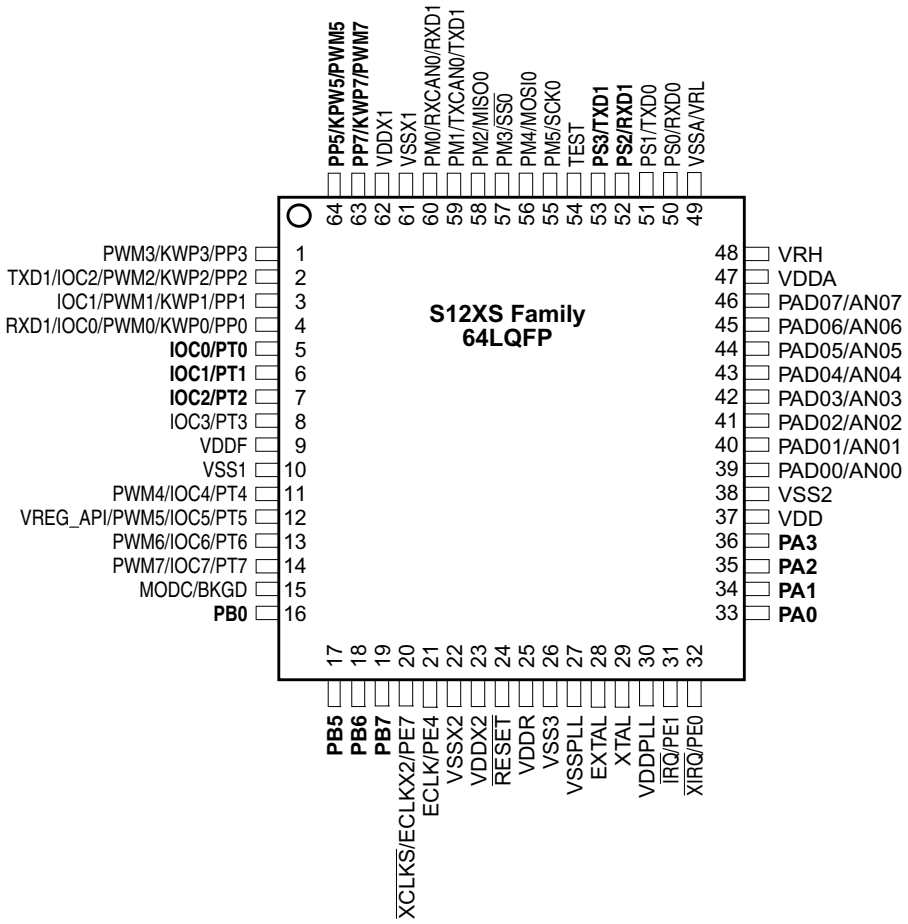

Figure 1-5. S12XS Family Pin Assignments 64-pin LQFP Package

1.2.2 Pin Assignment Overview

Table 1-4 provides a summary of which ports are available for each package option. Routing of pin functions is summarized in Table 1-5.

Table 1-4. Port Availability by Package Option

Port	112 LQFP	80 QFP	64 LQFP
Port AD/ADC Channels	16/16	8/8	8/8
Port A pins	8	8	4
Port B pins	8	8	4
Port E pins inc. IRQ/XIRQ input only	8	8	4
Port H	8	0	0
Port J	4	2	0
Port K	7	0	0
Port M	8	6	6
Port P	8	7	6
Port S	8	4	4
Port T	8	8	8
Sum of Ports	**91**	**59**	**44**
I/O Power Pairs VDDX/VSSX	2/2	2/2	2/2

Table 1-5. Peripheral - Port Routing Options[1]

	SCI1	SPI0	PWM	TIM
PM[1:0]	O			
PM[5:2]		O		
PP[2,0]	O			
PP[2:0]				O
PP[7:4]			X	
PS[3:2]	X			
PS[7:4]		X		
PT[2:0]				X
PT[7:4]			O	

1 "X" denotes reset condition, "O" denotes a possible rerouting under software control

Table 1-6 provides a pin out summary listing the availability and functionality of individual pins for each package option.

Table 1-6. Pin-Out Summary[1]

Package Terminal			Function					Power Supply	Internal Pull Resistor		Description
LQFP 112	QFP 80	LQFP 64	Pin	2nd Func.	3rd Func.	4th Func.	5th Func.		CTRL	Reset State	
1	1	1	PP3	KWP3	PWM3	—	—	V_{DDX}	PERP/PPSP	Disabled	Port P I/O, interrupt, PWM channel
2	2	2	PP2	KWP2	PWM2	IOC2	TXD1	V_{DDX}	PERP/PPSP	Disabled	Port P I/O, interrupt, PWM/TIM channel, TXD of SCI1
3	3	3	PP1	KWP1	PWM1	IOC1	—	V_{DDX}	PERP/PPSP	Disabled	Port P I/O, interrupt, PWM/TIM channel
4	4	4	PP0	KWP0	PWM0	IOC0	RXD1	V_{DDX}	PERP/PPSP	Disabled	Port P I/O, interrupt, PWM/TIM channel, RXD of SCI1
5	-	-	PK3	—	—	—	—	V_{DDX}	PUCR	Up	Port K I/O
6	-	-	PK2	—	—	—	—	V_{DDX}	PUCR	Up	Port K I/O
7	-	-	PK1	—	—	—	—	V_{DDX}	PUCR	Up	Port K I/O
8	-	-	PK0	—	—	—	—	V_{DDX}	PUCR	Up	Port K I/O
9	5	5	PT0	IOC0	—	—	—	V_{DDX}	PERT/PPST	Disabled	Port T I/O, TIM channel
10	6	6	PT1	IOC1	—	—	—	V_{DDX}	PERT/PPST	Disabled	Port T I/O, TIM channel
11	7	7	PT2	IOC2	—	—	—	V_{DDX}	PERT/PPST	Disabled	Port T I/O, TIM channel
12	8	8	PT3	IOC3	—	—	—	V_{DDX}	PERT/PPST	Disabled	Port T I/O, TIM channel
13	9	9	VDDF	—	—	—	—	—	—	—	—
14	10	10	VSS1	—	—	—	—	—	—	—	—
15	11	11	PT4	IOC4	PWM4	—	—	V_{DDX}	PERT/PPST	Disabled	Port T I/O, PWM/TIM channel

Table 1-6. Pin-Out Summary[1] (continued)

Package Terminal			Function					Power Supply	Internal Pull Resistor		Description
LQFP 112	QFP 80	LQFP 64	Pin	2nd Func.	3rd Func.	4th Func.	5th Func.		CTRL	Reset State	
16	12	12	PT5	IOC5	PWM5	VREG_ API	—	V_{DDX}	PERT/PPST	Disabled	Port T I/O, PWM/TIM channel, API output
17	13	13	PT6	IOC6	PWM6	—	—	V_{DDX}	PERT/PPST	Disabled	Port T I/O, channel of PWM/TIM
18	14	14	PT7	IOC7	PWM7	—	—	V_{DDX}	PERT/PPST	Disabled	Port T I/O, channel of PWM/TIM
19	-	-	PK5	—	—	—	—	V_{DDX}	PUCR	Up	Port K I/O
20	-	-	PK4	—	—	—	—	V_{DDX}	PUCR	Up	Port K I/O
21	-	-	PJ1	KWJ1	—	—	—	V_{DDX}	PERJ/PPSJ	Up	Port J I/O, interrupt
22	-	-	PJ0	KWJ0	—	—	—	V_{DDX}	PERJ/PPSJ	Up	Port J I/O, interrupt
23	15	15	BKGD	MODC	—	—	—	V_{DDX}	Always on	Up	Background debug
24	16	16	PB0	—	—	—	—	V_{DDX}	PUCR	Disabled	Port B I/O
25	17	-	PB1	—	—	—	—	V_{DDX}	PUCR	Disabled	Port B I/O
26	18	-	PB2	—	—	—	—	V_{DDX}	PUCR	Disabled	Port B I/O
27	19	-	PB3	—	—	—	—	V_{DDX}	PUCR	Disabled	Port B I/O
28	20	-	PB4	—	—	—	—	V_{DDX}	PUCR	Disabled	Port B I/O
29	21	17	PB5	—	—	—	—	V_{DDX}	PUCR	Disabled	Port B I/O
30	22	18	PB6	—	—	—	—	V_{DDX}	PUCR	Disabled	Port B I/O
31	23	19	PB7	—	—	—	—	V_{DDX}	PUCR	Disabled	Port B I/O
32	-	-	PH7	KWH7	—	—	—	V_{DDX}	PERH/PPSH	Disabled	Port H I/O, interrupt
33	-	-	PH6	KWH6	—	—	—	V_{DDX}	PERH/PPSH	Disabled	Port H I/O, interrupt
34	-	-	PH5	KWH5	—	—	—	V_{DDX}	PERH/PPSH	Disabled	Port H I/O, interrupt
35	-	-	PH4	KWH4	—	—	—	V_{DDX}	PERH/PPSH	Disabled	Port H I/O, interrupt

Table 1-6. Pin-Out Summary[1] (continued)

Package Terminal			Function					Power Supply	Internal Pull Resistor		Description
LQFP 112	QFP 80	LQFP 64	Pin	2nd Func.	3rd Func.	4th Func.	5th Func.		CTRL	Reset State	
36	24	20	PE7	$\overline{XCLKS}$	ECLKX2	—	—	V_{DDX}	PUCR	Up	Port E I/O, system clock output, clock select input
37	25	-	PE6	—	—	—	—	V_{DDX}	While $\overline{RESET}$ pin is low: down[2]		Port E I/O
38	26	-	PE5	—	—	—	—	V_{DDX}	While $\overline{RESET}$ pin is low: down[2]		Port E I/O
39	27	21	PE4	ECLK	—	—	—	V_{DDX}	PUCR	Up	Port E I/O, bus clock output
40	28	22	VSSX2	—	—	—	—	—	—	—	—
41	29	23	VDDX2	—	—	—	—	—	—	—	—
42	30	24	$\overline{RESET}$	—	—	—	—	V_{DDX}	PULLUP		External reset
43	31	25	VDDR	—	—	—	—	—	—	—	—
44	32	26	VSS3	—	—	—	—	—	—	—	—
45	33	27	VSSPLL	—	—	—	—	—	—	—	—
46	34	28	EXTAL	—	—	—	—	V_{DDPLL}	NA	NA	Oscillator pin
47	35	29	XTAL	—	—	—	—	V_{DDPLL}	NA	NA	Oscillator pin
48	36	30	VDDPLL	—	—	—	—	—	—	—	—
49	-	-	PH3	KWH3	—	—	—	V_{DDX}	PERH/PPSH	Disabled	Port H I/O, interrupt
50	-	-	PH2	KWH2	—	—	—	V_{DDX}	PERH/PPSH	Disabled	Port H I/O, interrupt
51	-	-	PH1	KWH1	—	—	—	V_{DDX}	PERH/PPSH	Disabled	Port H I/O, interrupt
52	-	-	PH0	KWH0	—	—	—	V_{DDX}	PERH/PPSH	Disabled	Port H I/O, interrupt
53	37	-	PE3	—	—	—	—	V_{DDX}	PUCR	Up	Port E I/O
54	38	-	PE2	—	—	—	—	V_{DDX}	PUCR	Up	Port E I/O

Table 1-6. Pin-Out Summary[1] (continued)

Package Terminal			Function					Power Supply	Internal Pull Resistor		Description
LQFP 112	QFP 80	LQFP 64	Pin	2nd Func.	3rd Func.	4th Func.	5th Func.		CTRL	Reset State	
55	39	31	PE1	$\overline{IRQ}$	—	—	—	V_{DDX}	PUCR	Up	Port E Input, maskable interrupt
56	40	32	PE0	$\overline{XIRQ}$	—	—	—	V_{DDX}	PUCR	Up	Port E Input, non-maskable interrupt
57	41	33	PA0	—	—	—	—	V_{DDX}	PUCR	Disabled	Port A I/O
58	42	34	PA1	—	—	—	—	V_{DDX}	PUCR	Disabled	Port A I/O
59	43	35	PA2	—	—	—	—	V_{DDX}	PUCR	Disabled	Port A I/O
60	44	36	PA3	—	—	—	—	V_{DDX}	PUCR	Disabled	Port A I/O
61	45	-	PA4	—	—	—	—	V_{DDX}	PUCR	Disabled	Port A I/O
62	46	-	PA5	—	—	—	—	V_{DDX}	PUCR	Disabled	Port A I/O
63	47	-	PA6	—	—	—	—	V_{DDX}	PUCR	Disabled	Port A I/O
64	48	-	PA7	—	—	—	—	V_{DDX}	PUCR	Disabled	Port A I/O
65	49	37	VDD	—	—	—	—	—	—	—	—
66	50	38	VSS2	—	—	—	—	—	—	—	—
67	51	39	PAD00	AN00	—	—	—	V_{DDA}	PER1AD	Disabled	Port AD I/O, analog input of ATD
68	-	-	PAD08	AN08	—	—	—	V_{DDA}	PER0AD	Disabled	Port AD I/O, analog input of ATD
69	52	40	PAD01	AN01	—	—	—	V_{DDA}	PER1AD	Disabled	Port AD I/O, analog input of ATD
70	-	-	PAD09	AN09	—	—	—	V_{DDA}	PER0AD	Disabled	Port AD I/O, analog input of ATD
71	53	41	PAD02	AN02	—	—	—	V_{DDA}	PER1AD	Disabled	Port AD I/O, analog input of ATD

Table 1-6. Pin-Out Summary[1] (continued)

Package Terminal			Function					Power Supply	Internal Pull Resistor		Description
LQFP 112	QFP 80	LQFP 64	Pin	2nd Func.	3rd Func.	4th Func.	5th Func.		CTRL	Reset State	
72	-	-	PAD10	AN10	—	—	—	V_{DDA}	PER0AD	Disabled	Port AD I/O, analog input of ATD
73	54	42	PAD03	AN03	—	—	—	V_{DDA}	PER1AD	Disabled	Port AD I/O, analog input of ATD
74	-	-	PAD11	AN11	—	—	—	V_{DDA}	PER0AD	Disabled	Port AD I/O, analog input of ATD
75	55	43	PAD04	AN04	—	—	—	V_{DDA}	PER1AD	Disabled	Port AD I/O, analog input of ATD
76	-	-	PAD12	AN12	—	—	—	V_{DDA}	PER0AD	Disabled	Port AD I/O, analog input of ATD
77	56	44	PAD05	AN05	—	—	—	V_{DDA}	PER1AD	Disabled	Port AD I/O, analog input of ATD
78	-	-	PAD13	AN13	—	—	—	V_{DDA}	PER0AD	Disabled	Port AD I/O, analog input of ATD
79	57	45	PAD06	AN06	—	—	—	V_{DDA}	PER1AD	Disabled	Port AD I/O, analog input of ATD
80	-	-	PAD14	AN14	—	—	—	V_{DDA}	PER0AD	Disabled	Port AD I/O, analog input of ATD
81	58	46	PAD07	AN07	—	—	—	V_{DDA}	PER1AD	Disabled	Port AD I/O, analog input of ATD
82	-	-	PAD15	AN15	—	—	—	V_{DDA}	PER0AD	Disabled	Port AD I/O, analog input of ATD
83	59	47	VDDA	—	—	—	—	—	—	—	—
84	60	48	VRH	—	—	—	—	—	—	—	—
85	61	49	VRL[3]	—	—	—	—	—	—	—	—
86	62	49	VSSA	—	—	—	—	—	—	—	—

Table 1-6. Pin-Out Summary[1] (continued)

Package Terminal			Function					Power Supply	Internal Pull Resistor		Description
LQFP 112	QFP 80	LQFP 64	Pin	2nd Func.	3rd Func.	4th Func.	5th Func.		CTRL	Reset State	
87	-	-	PM7	—	—	—	—	V_{DDX}	PERM/PPSM	Disabled	Port M I/O
88	-	-	PM6	—	—	—	—	V_{DDX}	PERM/PPSM	Disabled	Port M I/O
89	63	50	PS0	RXD0	—	—	—	V_{DDX}	PERS/PPSS	Up	Port S I/O, RXD of SCI0
90	64	51	PS1	TXD0	—	—	—	V_{DDX}	PERS/PPSS	Up	Port S I/O, TXD of SCI0
91	65	52	PS2	RXD1	—	—	—	V_{DDX}	PERS/PPSS	Up	Port S I/O, RXD of SCI1
92	66	53	PS3	TXD1	—	—	—	V_{DDX}	PERS/PPSS	Up	Port S I/O, TXD of SCI1
93	-	-	PS4	MISO0	—	—	—	V_{DDX}	PERS/PPSS	Up	Port S I/O, MISO of SPI0
94	-	-	PS5	MOSI0	—	—	—	V_{DDX}	PERS/PPSS	Up	Port S I/O, MOSI of SPI0
95	-	-	PS6	SCK0	—	—	—	V_{DDX}	PERS/PPSS	Up	Port S I/O, SCK of SPI0
96	-	-	PS7	$\overline{SS0}$	—	—	—	V_{DDX}	PERS/PPSS	Up	Port S I/O, $\overline{SS}$ of SPI0
97	67	54	TEST	—	—	—	—	N.A.	$\overline{RESET}$ pin	DOWN	Test input
98	68	-	PJ7	KWJ7	—	—	—	V_{DDX}	PERJ/PPSJ	Up	Port J I/O, interrupt
99	69	-	PJ6	KWJ6	—	—	—	V_{DDX}	PERJ/PPSJ	Up	Port J I/O, interrupt
100	70	55	PM5	SCK0	—	—	—	V_{DDX}	PERM/PPSM	Disabled	Port M I/O, SCK of SPI0
101	71	56	PM4	MOSI0	—	—	—	V_{DDX}	PERM/PPSM	Disabled	Port M I/O, MOSI of SPI0
102	72	57	PM3	$\overline{SS0}$	—	—	—	V_{DDX}	PERM/PPSM	Disabled	Port M I/O, $\overline{SS}$ of SPI0
103	73	58	PM2	MISO0	—	—	—	V_{DDX}	PERM/PPSM	Disabled	Port M I/O, MISO of SPI0
104	74	59	PM1	TXCAN0	TXD1	—	—	V_{DDX}	PERM/PPSM	Disabled	Port M I/O, TX of CAN0, TXD of SCI1
105	75	60	PM0	RXCAN0	RXD1	—	—	V_{DDX}	PERM/PPSM	Disabled	Port M I/O, RX of CAN0, RXD of SCI1

Table 1-6. Pin-Out Summary[1] (continued)

Package Terminal			Function					Power Supply	Internal Pull Resistor		Description
LQFP 112	QFP 80	LQFP 64	Pin	2nd Func.	3rd Func.	4th Func.	5th Func.		CTRL	Reset State	
106	76	61	VSSX1	—	—	—	—	—	—	—	—
107	77	62	VDDX1	—	—	—	—	—	—	—	—
108	-	-	PK7	—	—	—	—	V_{DDX}	PUCR	Up	Port K I/O
109	78	63	PP7	KWP7	PWM7	—	—	V_{DDX}	PERP/PPSP	Disabled	Port P I/O, interrupt, PWM channel
110	-	-	PP6	KWP6	PWM6	—	—	V_{DDX}	PERP/PPSP	Disabled	Port P I/O, interrupt, PWM channel
111	79	64	PP5	KWP5	PWM5	—	—	V_{DDX}	PERP/PPSP	Disabled	Port P I/O, interrupt, PWM channel
112	80	-	PP4	KWP4	PWM4	—	—	V_{DDX}	PERP/PPSP	Disabled	Port P I/O, interrupt, PWM channel

1 Table shows a superset of pin functions. Not all functions are available on all derivatives

2 For compatibility to XE family

3 VRL and VSSA share single pin on 64 package option

1.2.3 Detailed Signal Descriptions

NOTE

The pin list of the largest package version of each S12XS Family derivative gives the complete of interface signals that also exist on smaller package options, although some of them are not bonded out. For devices assembled in smaller packages all non-bonded out pins should be configured as outputs after reset in order to avoid current drawn from floating inputs. Refer to Table 1-6 for affected pins.

1.2.3.1 EXTAL, XTAL — Oscillator Pins

EXTAL and XTAL are the crystal driver and external clock pins. On reset all the device clocks are derived from the EXTAL input frequency. XTAL is the oscillator output.

1.2.3.2 $\overline{\text{RESET}}$ — External Reset Pin

The $\overline{\text{RESET}}$ pin is an active low bidirectional control signal. It acts as an input to initialize the MCU to a known start-up state. As an output it is driven low to indicate when any internal MCU reset source triggers. The $\overline{\text{RESET}}$ pin has an internal pull-up device.

1.2.3.3 TEST — Test Pin

This input only pin is reserved for factory test. This pin has a pull-down device.

NOTE

The TEST pin must be tied to V_{SS} in all applications.

1.2.3.4 BKGD / MODC — Background Debug and Mode Pin

The BKGD/MODC pin is used as a pseudo-open-drain pin for the background debug communication. It is used as a MCU operating mode select pin during reset. The state of this pin is latched to the MODC bit at the rising edge of $\overline{\text{RESET}}$. The BKGD pin has an internal pull-up device.

1.2.3.5 PAD[15:0] / AN[15:0] — Port AD Input Pins of ATD0

PAD[15:0] are general-purpose input or output pins and analog inputs AN[15:0] of the analog-to-digital converter ATD0.

1.2.3.6 PA[7:0] — Port A I/O Pins

PA[7:0] are general-purpose input or output pins.

1.2.3.7 PB[7:0] — Port B I/O Pins

PB[7:0] are general-purpose input or output pins.

1.2.3.8 PE7 / ECLKX2 / $\overline{\text{XCLKS}}$ — Port E I/O Pin 7

PE7 is a general-purpose input or output pin. ECLKX2 is a clock output of twice the internal bus frequency. The $\overline{\text{XCLKS}}$ is an input signal which controls whether a crystal in combination with the internal loop controlled Pierce oscillator is used or whether full swing Pierce oscillator/external clock circuitry is used (refer to **Section 1.10 Oscillator Configuration**). An internal pull-up is enabled during reset.

1.2.3.9 PE[6:5] — Port E I/O Pin 6-5

PE[6:5] are a general-purpose input or output pins.

1.2.3.10 PE4 / ECLK — Port E I/O Pin 4

PE4 is a general-purpose input or output pin. It can be configured to output the internal bus clock ECLK. ECLK can be used as a timing reference. The ECLK output has a programmable prescaler.

1.2.3.11 PE[3:2] — Port E I/O Pin 3

PE[3:2] are a general-purpose input or output pins.

1.2.3.12 PE1 / $\overline{\text{IRQ}}$ — Port E Input Pin 1

PE1 is a general-purpose input pin and the maskable interrupt request input that provides a means of applying asynchronous interrupt requests. This will wake up the MCU from stop or wait mode.

1.2.3.13 PE0 / $\overline{\text{XIRQ}}$ — Port E Input Pin 0

PE0 is a general-purpose input pin and the non-maskable interrupt request input that provides a means of applying asynchronous interrupt requests. This will wake up the MCU from stop or wait mode. The XIRQ interrupt is level sensitive and active low. As XIRQ is level sensitive, while this pin is low the MCU will not enter STOP mode.

1.2.3.14 PH[7:0] / KWH[7:0] — Port H I/O Pins

PH[7:0] are a general-purpose input or output pins. They can be configured as keypad wakeup inputs.

1.2.3.15 PJ[7:6] / KWJ[7:6] — PORT J I/O Pins 7-6

PJ[7:6] are a general-purpose input or output pins. They can be configured as keypad wakeup inputs.

1.2.3.16 PJ[1:0] / KWJ[1:0] — PORT J I/O Pins 1-0

PJ[1:0] are a general-purpose input or output pins. They can be configured as keypad wakeup inputs.

1.2.3.17 PK[7,5:0] — Port K I/O Pins 7 and 5-0

PK[7,5:0] are a general-purpose input or output pins.

1.2.3.18 PM[7:6] — Port M I/O Pins 7-6

PM[7:6] are a general-purpose input or output pins.

1.2.3.19 PM5 / SCK0 — Port M I/O Pin 5

PM5 is a general-purpose input or output pin. It can be configured as the serial clock pin SCK of the serial peripheral interface 0 (SPI0).

1.2.3.20 PM4 / MOSI0 — Port M I/O Pin 4

PM4 is a general-purpose input or output pin. It can be configured as the master output (during master mode) or slave input pin (during slave mode) MOSI for the serial peripheral interface 0 (SPI0).

1.2.3.21 PM3 / $\overline{\text{SS0}}$ — Port M I/O Pin 3

PM3 is a general-purpose input or output pin. It can be configured as the slave select pin $\overline{\text{SS}}$ of the serial peripheral interface 0 (SPI0).

1.2.3.22 PM2 / MISO0 — Port M I/O Pin 2

PM2 is a general-purpose input or output pin. It can be configured as the master input (during master mode) or slave output pin (during slave mode) MISO for the serial peripheral interface 0 (SPI0).

1.2.3.23 PM1 / TXCAN0 / TXD1 — Port M I/O Pin 1

PM1 is a general-purpose input or output pin. It can be configured as the transmit pin TXCAN of the scalable controller area network controller 0 (CAN0). It can be configured as the transmit pin TXD of serial communication interface 1 (SCI1).

1.2.3.24 PM0 / RXCAN0 / RXD1 — Port M I/O Pin 0

PM0 is a general-purpose input or output pin. It can be configured as the receive pin RXCAN of the scalable controller area network controller 0 (CAN0). It can be configured as the receive pin RXD of serial communication interface 1 (SCI1).

1.2.3.25 PP7 / KWP7 / PWM7 — Port P I/O Pin 7

PP7 is a general-purpose input or output pin. It can be configured as keypad wakeup input. It can be configured as pulse width modulator (PWM) channel 7 output or emergency shutdown input.

1.2.3.26 PP[6:3] / KWP[6:3] / PWM[6:3] — Port P I/O Pins 6-3

PP[6:3] are a general-purpose input or output pins. They can be configured as keypad wakeup inputs. They can be configured as pulse width modulator (PWM) channel 6-3 output.

1.2.3.27 PP2 / KWP2 / PWM2 / TXD1 / IOC2 — Port P I/O Pin 2

PP2 is a general-purpose input or output pin. It can be configured as a keypad wakeup input. It can be configured as pulse width modulator (PWM) channel 2 output, TIM channel 2 or as the transmit pin TXD of serial communication interface 1 (SCI1).

1.2.3.28 PP1 / KWP1 / PWM1 / IOC1 — Port P I/O Pin 1

PP1 is a general-purpose input or output pin. It can be configured as a keypad wakeup input. It can be configured as pulse width modulator (PWM) channel 1 output, TIM channel 1.

1.2.3.29 PP0 / KWP0 / PWM0 / RXD1 / IOC0 — Port P I/O Pin 0

PP0 is a general-purpose input or output pin. It can be configured as a keypad wakeup input. It can be configured as pulse width modulator (PWM) channel 0 output, TIM channel 0 or as the receive pin RXD of serial communication interface 1 (SCI1).

1.2.3.30 PS7 / $\overline{SS0}$ — Port S I/O Pin 7

PS7 is a general-purpose input or output pin. It can be configured as the slave select pin $\overline{SS}$ of the serial peripheral interface 0 (SPI0).

1.2.3.31 PS6 / SCK0 — Port S I/O Pin 6

PS6 is a general-purpose input or output pin. It can be configured as the serial clock pin SCK of the serial peripheral interface 0 (SPI0).

1.2.3.32 PS5 / MOSI0 — Port S I/O Pin 5

PS5 is a general-purpose input or output pin. It can be configured as master output (during master mode) or slave input pin (during slave mode) MOSI of the serial peripheral interface 0 (SPI0).

1.2.3.33 PS4 / MISO0 — Port S I/O Pin 4

PS4 is a general-purpose input or output pin. It can be configured as master input (during master mode) or slave output pin (during slave mode) MOSI of the serial peripheral interface 0 (SPI0).

1.2.3.34 PS3 / TXD1 — Port S I/O Pin 3

PS3 is a general-purpose input or output pin. It can be configured as the transmit pin TXD of serial communication interface 1 (SCI1).

1.2.3.35 PS2 / RXD1 — Port S I/O Pin 2

PS2 is a general-purpose input or output pin. It can be configured as the receive pin RXD of serial communication interface 1 (SCI1).

1.2.3.36 PS1 / TXD0 — Port S I/O Pin 1

PS1 is a general-purpose input or output pin. It can be configured as the transmit pin TXD of serial communication interface 0 (SCI0).

1.2.3.37 PS0 / RXD0 — Port S I/O Pin 0

PS0 is a general-purpose input or output pin. It can be configured as the receive pin RXD of serial communication interface 0 (SCI0).

1.2.3.38 PT[7:6] / IOC[7:6] / PWM[7:6] — Port T I/O Pins 7-6

PT[7:6] are general-purpose input or output pins. They can be configured as timer (TIM) channel 7-6 or pulse width modulator (PWM) outputs 7-6

1.2.3.39 PT5 / IOC5 / VREG_API — Port T I/O Pin 5

PT[5] is a general-purpose input or output pin. It can be configured as timer (TIM) channel 5, pulse width modulator (PWM) output 5 or as the VREG_API signal output.

1.2.3.40 PT4 / IOC4 / PWM4 — Port T I/O Pin 4

PT4 is a general-purpose input or output pin. It can be configured as timer (TIM) channel 4 or pulse width modulator (PWM) output 4.

1.2.3.41 PT[3:0] / IOC[3:0] — Port T I/O Pin [3:0]

PT[3:0] are a general-purpose input or output pins. They can be configured as timer (TIM) channels 3-0.

1.2.4 Power Supply Pins

S12XS Family power and ground pins are described below.

Because fast signal transitions place high, short-duration current demands on the power supply, use bypass capacitors with high-frequency characteristics and place them as close to the MCU as possible.

NOTE

All V_{SS} pins must be connected together in the application.

1.2.4.1 VDDX[2:1], VSSX[2:1] — Power and Ground Pins for I/O Drivers

External power and ground for I/O drivers. Bypass requirements depend on how heavily the MCU pins are loaded. All V_{DDX} pins are connected together internally. All V_{SSX} pins are connected together internally.

1.2.4.2 VDDR — Power Pin for Internal Voltage Regulator

Power supply input to the internal voltage regulator.

1.2.4.3 VDD, VSS2, VSS3 — Core Power Pins

The voltage supply of nominally 1.8 V is derived from the internal voltage regulator. The return current path is through the VSS2 and VSS3 pins. No static external loading of these pins is permitted.

1.2.4.4 VDDF, VSS1 — NVM Power Pins

The voltage supply of nominally 2.8 V is derived from the internal voltage regulator. The return current path is through the VSS1 pin. No static external loading of these pins is permitted.

1.2.4.5 VDDA, VSSA — Power Supply Pins for ATD and Voltage Regulator

These are the power supply and ground input pins for the analog-to-digital converters and the voltage regulator.

1.2.4.6 VRH, VRL — ATD Reference Voltage Input Pins

V_{RH} and V_{RL} are the reference voltage input pins for the analog-to-digital converter.

1.2.4.7 VDDPLL, VSSPLL — Power Supply Pins for PLL

These pins provide operating voltage and ground for the oscillator and the phased-locked loop. The voltage supply of nominally 1.8 V is derived from the internal voltage regulator. This allows the supply voltage to the oscillator and PLL to be bypassed independently. This voltage is generated by the internal voltage regulator. No static external loading of these pins is permitted.

Table 1-7. Power and Ground Connection Summary

Mnemonic	Nominal Voltage	Description
VDDR	5.0 V	External power supply to internal voltage regulator
VDDX[2:1]	5.0 V	External power and ground, supply to pin drivers
VSSX[2:1]	0 V	
VDDA	5.0 V	Operating voltage and ground for the analog-to-digital converters and the reference for the internal voltage regulator, allows the supply voltage to the A/D to be bypassed independently.
VSSA	0 V	
VRL	0 V	Reference voltages for the analog-to-digital converter.
VRH	5.0 V	
VDD	1.8 V	Internal power and ground generated by internal regulator for the internal core.
VSS1, VSS2, VSS3	0 V	
VDDF	2.8 V	Internal power and ground generated by internal regulator for the internal NVM.

Table 1-7. Power and Ground Connection Summary

Mnemonic	Nominal Voltage	Description
VDDPLL	1.8 V	Provides operating voltage and ground for the phased-locked loop. This allows the supply voltage to the PLL to be bypassed independently. Internal power and ground generated by internal regulator.
VSSPLL	0 V	

1.3 System Clock Description

The clock and reset generator module (CRG) provides the internal clock signals for the core and all peripheral modules. Figure 1-6 shows the clock connections from the CRG to all modules.

Consult the S12XECRG section for details on clock generation.

NOTE

The XS family uses the XE family clock and reset generator module. Therefore all CRG references are related to S12XECRG.

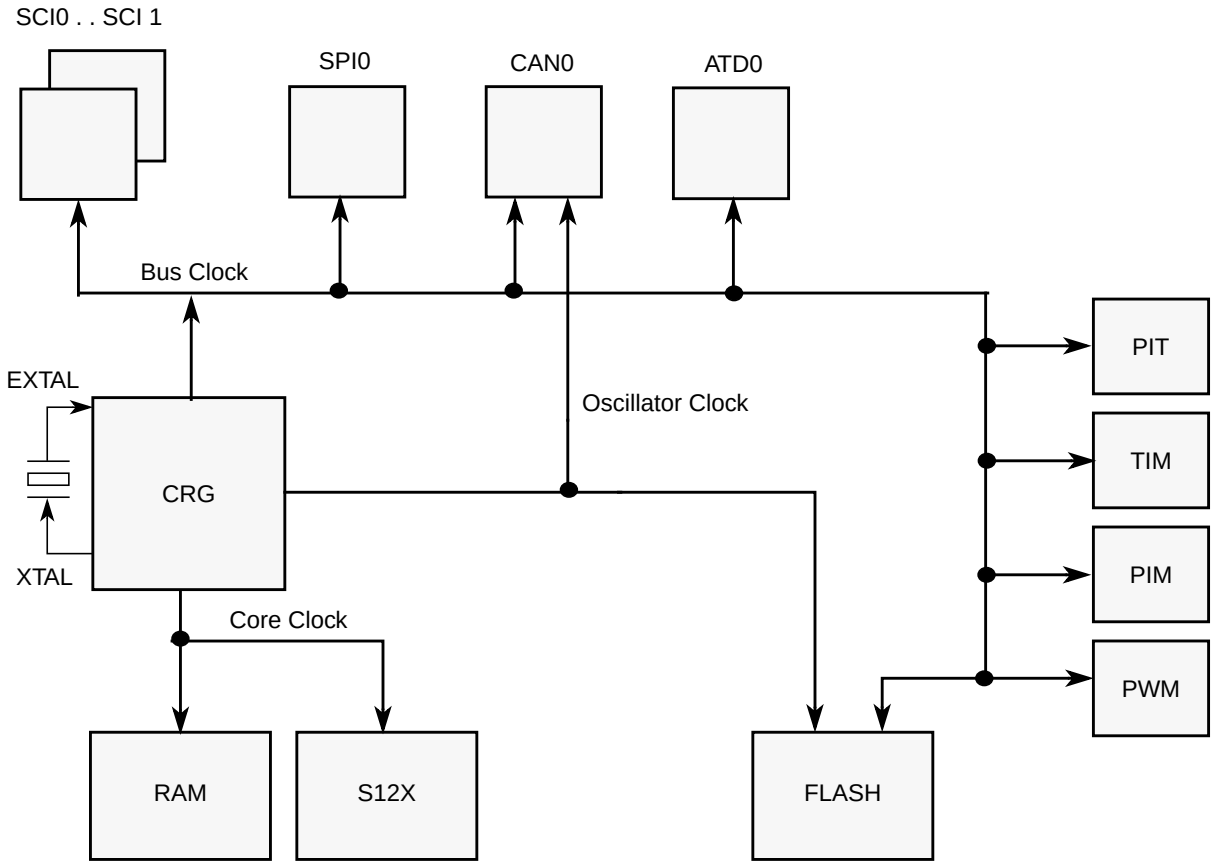

Figure 1-6. Clock Connections

The system clock can be supplied in several ways enabling a range of system operating frequencies to be supported:

- The on-chip phase locked loop (PLL)
- the PLL self clocking
- the oscillator

The clock generated by the PLL or oscillator provides the main system clock frequencies core clock and bus clock. As shown in Figure 1-6, these system clocks are used throughout the MCU to drive the core, the memories, and the peripherals.

The program Flash memory is supplied by the bus clock and the oscillator clock. The oscillator clock is used as a time base to derive the program and erase times for the NVMs.

The CAN modules may be configured to have their clock sources derived either from the bus clock or directly from the oscillator clock. This allows the user to select its clock based on the required jitter performance.

In order to ensure the presence of the clock the MCU includes an on-chip clock monitor connected to the output of the oscillator. The clock monitor can be configured to invoke the PLL self-clocking mode or to generate a system reset if it is allowed to time out as a result of no oscillator clock being present.

In addition to the clock monitor, the MCU also provides a clock quality checker which performs a more accurate check of the clock. The clock quality checker counts a predetermined number of clock edges within a defined time window to insure that the clock is running. The checker can be invoked following specific events such as on wake-up or clock monitor failure.

1.4 Modes of Operation

The MCU can operate in different modes. These are described in 1.4.1 Chip Configuration Summary.

The MCU can operate in different power modes to facilitate power saving when full system performance is not required. These are described in 1.4.2 Power Modes.

Some modules feature a software programmable option to freeze the module status whilst the background debug module is active to facilitate debugging. This is described in 1.4.3 Freeze Mode.

1.4.1 Chip Configuration Summary

The different modes and the security state of the MCU affect the debug features (enabled or disabled).

The operating mode out of reset is determined by the state of the MODC signal during reset (see Table 1-8). The MODC bit in the MODE register shows the current operating mode and provides limited mode switching during operation. The state of the MODC signal is latched into this bit on the rising edge of $\overline{\text{RESET}}$.

Table 1-8. Chip Modes

Chip Modes	MODC
Normal single chip	1
Special single chip	0

1.4.1.1 Normal Single-Chip Mode

This mode is intended for normal device operation. The opcode from the on-chip memory is being executed after reset (requires the reset vector to be programmed correctly). The processor program is executed from internal memory.

1.4.1.2 Special Single-Chip Mode

This mode is used for debugging single-chip operation, boot-strapping, or security related operations. The background debug module BDM is active in this mode. The CPU executes a monitor program located in an on-chip ROM. BDM firmware waits for additional serial commands through the BKGD pin.

1.4.2 Power Modes

The MCU features two main low-power modes. Consult the respective section for module specific behavior in system stop, system pseudo stop, and system wait mode. An important source of information about the clock system is the Clock and Reset Generator section (CRG).

1.4.2.1 System Stop Modes

The system stop modes are entered if the CPU executes the STOP instruction unless an NVM command is active. Depending on the state of the PSTP bit in the CLKSEL register the MCU goes into pseudo stop mode or full stop mode. Please refer to CRG section. Asserting $\overline{\text{RESET}}$, $\overline{\text{XIRQ}}$, $\overline{\text{IRQ}}$ or any other interrupt that is not masked exits system stop modes. System stop modes can be exited by CPU activity, depending on the configuration of the interrupt request.

If the CPU executes the STOP instruction whilst an NVM command is being processed, then the system clocks continue running until NVM activity is completed. If a non-masked interrupt occurs within this time then the system does not effectively enter stop mode although the STOP instruction has been executed.

1.4.2.2 Full Stop Mode

The oscillator is stopped in this mode. By default all clocks are switched off and all counters and dividers remain frozen. The Autonomous Periodic Interrupt (API) and ATD module may be enabled to self wake the device. A Fast wake up mode is available to allow the device to wake from Full Stop mode immediately on the PLL internal clock without starting the oscillator clock.

1.4.2.3 Pseudo Stop Mode

In this mode the system clocks are stopped but the oscillator is still running and the real time interrupt (RTI) and watchdog (COP), API and ATD modules may be enabled. Other peripherals are turned off. This mode consumes more current than system stop mode but, as the oscillator continues to run, the full speed wake up time from this mode is significantly shorter.

1.4.2.4 Wait Mode

This mode is entered when the CPU executes the WAI instruction. In this mode the CPU will not execute instructions. The internal CPU clock is switched off. All peripherals can be active in system wait mode. For further power consumption the peripherals can individually turn off their local clocks. Asserting $\overline{\text{RESET}}$, $\overline{\text{XIRQ}}$, $\overline{\text{IRQ}}$ or any other interrupt that is not masked ends system wait mode.

1.4.2.5 Run Mode

Although this is not a low-power mode, unused peripheral modules should not be enabled in order to save power.

1.4.3 Freeze Mode

The timer module, pulse width modulator, analog-to-digital converters, and the periodic interrupt timer provide a software programmable option to freeze the module status when the background debug module is active. This is useful when debugging application software. For detailed description of the behavior of the ATD, TIM, PWM, and PIT when the background debug module is active consult the corresponding section.

1.5 Security

The MCU security mechanism prevents unauthorized access to the Flash memory. For a detailed description of the security features refer to the S12XS9SEC section.

1.6 Resets and Interrupts

Consult the CPU12/CPU12X Reference Manual and the S12XINT section for information on exception processing.

NOTE

When referring to the S12XINT section please be aware that the XS family neither features an XGATE nor an MPU module.

1.6.1 Resets

Resets are explained in detail in the Clock Reset Generator (S12XECRG) section.

Table 1-9. Reset Sources and Vector Locations

Vector Address	Reset Source	CCR Mask	Local Enable
$FFFE	Power-On Reset (POR)	None	None
$FFFE	Low Voltage Reset (LVR)	None	None
$FFFE	External pin $\overline{\text{RESET}}$	None	None
$FFFE	Illegal Address Reset	None	None
$FFFC	Clock monitor reset	None	PLLCTL (CME, SCME)
$FFFA	COP watchdog reset	None	COP rate select

1.6.2 Vectors

Table 1-10 lists all interrupt sources and vectors in the default order of priority. The interrupt module (S12XINT) provides an interrupt vector base register (IVBR) to relocate the vectors. Associated with each

I-bit maskable service request is a configuration register. It selects if the service request is enabled and the service request priority level.

Table 1-10. Interrupt Vector Locations (Sheet 1 of 2)

Vector Address[1]	Interrupt Source	CCR Mask	Local Enable	STOP Wake up	WAIT Wake up
Vector base + $F8	Unimplemented instruction trap	None	None	—	—
Vector base+ $F6	SWI	None	None	—	—
Vector base+ $F4	$\overline{XIRQ}$	X Bit	None	Yes	Yes
Vector base+ $F2	$\overline{IRQ}$	I bit	IRQCR (IRQEN)	Yes	Yes
Vector base+ $F0	Real time interrupt	I bit	CRGINT (RTIE)	Refer to CRG interrupt section	
Vector base+ $EE	TIM timer channel 0	I bit	TIE (C0I)	No	Yes
Vector base + $EC	TIM timer channel 1	I bit	TIE (C1I)	No	Yes
Vector base+ $EA	TIM timer channel 2	I bit	TIE (C2I)	No	Yes
Vector base+ $E8	TIM timer channel 3	I bit	TIE (C3I)	No	Yes
Vector base+ $E6	TIM timer channel 4	I bit	TIE (C4I)	No	Yes
Vector base+ $E4	TIM timer channel 5	I bit	TIE (C5I)	No	Yes
Vector base + $E2	TIM timer channel 6	I bit	TIE (C6I)	No	Yes
Vector base+ $E0	TIM timer channel 7	I bit	TIE (C7I)	No	Yes
Vector base+ $DE	TIM timer overflow	I bit	TSRC2 (TOF)	No	Yes
Vector base+ $DC	TIM Pulse accumulator A overflow	I bit	PACTL (PAOVI)	No	Yes
Vector base + $DA	TIM Pulse accumulator input edge	I bit	PACTL (PAI)	No	Yes
Vector base + $D8	SPI0	I bit	SPI0CR1 (SPIE, SPTIE)	No	Yes
Vector base+ $D6	SCI0	I bit	SCI0CR2 (TIE, TCIE, RIE, ILIE)	Yes	Yes
Vector base + $D4	SCI1	I bit	SCI1CR2 (TIE, TCIE, RIE, ILIE)	Yes	Yes
Vector base + $D2	ATD0	I bit	ATD0CTL2 (ASCIE)	Yes	Yes
Vector base + $D0	Reserved				
Vector base + $CE	Port J	I bit	PIEJ (PIEJ7-PIEJ0)	Yes	Yes
Vector base + $CC	Port H	I bit	PIEH (PIEH7-PIEH0)	Yes	Yes
Vector base + $CA	Reserved				
Vector base + $C8	Reserved				
Vector base + $C6	CRG PLL lock	I bit	CRGINT(LOCKIE)	Refer to CRG interrupt section	
Vector base + $C4	CRG self-clock mode	I bit	CRGINT (SCMIE)	Refer to CRG interrupt section	
Vector base + $C2 to Vector base + $BC	Reserved				

Table 1-10. Interrupt Vector Locations (Sheet 2 of 2)

Vector Address[1]	Interrupt Source	CCR Mask	Local Enable	STOP Wake up	WAIT Wake up
Vector base + $BA	FLASH Fault Detect	I bit	FCNFG2 (SFDIE, DFDIE)	No	No
Vector base + $B8	FLASH	I bit	FCNFG (CCIE)	No	Yes
Vector base + $B6	CAN0 wake-up	I bit	CAN0RIER (WUPIE)	Yes	Yes
Vector base + $B4	CAN0 errors	I bit	CAN0RIER (CSCIE, OVRIE)	No	Yes
Vector base + $B2	CAN0 receive	I bit	CAN0RIER (RXFIE)	No	Yes
Vector base + $B0	CAN0 transmit	I bit	CAN0TIER (TXEIE[2:0])	No	Yes
Vector base + $AE to Vector base + $90	Reserved				
Vector base + $8E	Port P Interrupt	I bit	PIEP (PIEP7-PIEP0)	Yes	Yes
Vector base+ $8C	PWM emergency shutdown	I bit	PWMSDN (PWMIE)	No	Yes
Vector base + $8A to Vector base + $82	Reserved				
Vector base + $80	Low-voltage interrupt (LVI)	I bit	VREGCTRL (LVIE)	No	Yes
Vector base + $7E	Autonomous periodical interrupt (API)	I bit	VREGAPICTRL (APIE)	Yes	Yes
Vector base + $7C	High Temperature Interrupt (HTI)	I bit	VREGHTCL (HTIE)	No	Yes
Vector base + $7A	Periodic interrupt timer channel 0	I bit	PITINTE (PINTE0)	No	Yes
Vector base + $78	Periodic interrupt timer channel 1	I bit	PITINTE (PINTE1)	No	Yes
Vector base + $76	Periodic interrupt timer channel 2	I bit	PITINTE (PINTE2)	No	Yes
Vector base + $74	Periodic interrupt timer channel 3	I bit	PITINTE (PINTE3)	No	Yes
Vector base + $72 to Vector base + $40	Reserved				
Vector base + $3E	ATD0 Compare Interrupt	I bit	ATD0CTL2 (ACMPIE)	Yes	Yes
Vector base + $3C to Vector base + $14	Reserved				
Vector base + $12	System Call Interrupt (SYS)	—	None	—	—
Vector base + $10	Spurious interrupt	—	None	—	—

1 16 bits vector address based

1.6.3 Effects of Reset

When a reset occurs, MCU registers and control bits are initialized. Refer to the respective block sections for register reset states.

On each reset, the Flash module executes a reset sequence to load Flash configuration registers.

1.6.3.1 Flash Configuration Reset Sequence Phase

On each reset, the Flash module will hold CPU activity while loading Flash module registers from the Flash memory. If double faults are detected in the reset phase, Flash module protection and security may be active on leaving reset. This is explained in more detail in the Flash module section.

1.6.3.2 Reset While Flash Command Active

If a reset occurs while any Flash command is in progress, that command will be immediately aborted. The state of the word being programmed or the sector/block being erased is not guaranteed.

1.6.3.3 I/O Pins

Refer to the PIM section for reset configurations of all peripheral module ports.

1.6.3.4 Memory

The RAM arrays are not initialized out of reset.

1.6.3.5 COP Configuration

The COP time-out rate bits CR[2:0] and the WCOP bit in the COPCTL register are loaded from the Flash register FOPT. See Table 1-11 and Table 1-12 for coding. The FOPT register is loaded from the Flash configuration field byte at global address $7FFF0E during the reset sequence.

If the MCU is secured the COP time-out rate is always set to the longest period (CR[2:0] = 111) after any reset into Special Single Chip mode.

Table 1-11. Initial COP Rate Configuration

NV[2:0] in FOPT Register	CR[2:0] in COPCTL Register
000	111
001	110
010	101
011	100
100	011
101	010
110	001
111	000

Table 1-12. Initial WCOP Configuration

NV[3] in FOPT Register	WCOP in COPCTL Register
1	0
0	1

1.7 ATD0 Configuration

1.7.1 External Trigger Input Connection

The ATD module includes four external trigger inputs ETRIG0, ETRIG1, ETRIG2, and ETRIG3. The external trigger allows the user to synchronize ATD conversion to external trigger events. Table 1-13 shows the connection of the external trigger inputs.

Table 1-13. ATD0 External Trigger Sources

External Trigger Input	Connectivity
ETRIG0	Pulse width modulator channel 1
ETRIG1	Pulse width modulator channel 3
ETRIG2	Periodic interrupt timer hardware trigger 0
ETRIG3	Periodic interrupt timer hardware trigger 1

Consult the ATD section for information about the analog-to-digital converter module. References to freeze mode are equivalent to active BDM mode.

1.7.2 ATD0 Channel[17] Connection

Further to the 16 externally available channels, ATD0 features an extra channel[17] that is connected to the internal temperature sensor at device level. To access this channel ATD0 must use the channel encoding SC:CD:CC:CB:CA = 1:0:0:0:1 in ATDCTL5. For more temperature sensor information, please refer to 1.8.1 Temperature Sensor Configuration.

1.8 VREG Configuration

The device must be configured with the internal voltage regulator enabled. Operation in conjunction with an external voltage regulator is not supported.

The API trimming register APITR is loaded from the Flash IFR option field at global address 0x40_00F0 bits[5:0] during the reset sequence. Currently factory programming of this IFR range is not supported.

Read access to reserved VREG register space returns “0”. Write accesses have no effect. This device does not support access abort of reserved VREG register space.

1.8.1 Temperature Sensor Configuration

The VREG high temperature trimming register bits VREGHTTR[3:0] are loaded from the internal Flash during the reset sequence. To use the high temperature interrupt within the specified limits (T_{HTIA} and T_{HTID}) these bits must be loaded with 0x8. Currently factory programming is not supported.

The device temperature can be monitored on ATD0 channel[17]. The internal bandgap reference voltage can also be mapped to ATD0 analog input channel[17]. The voltage regulator VSEL bit when set, maps the bandgap and, when clear, maps the temperature sensor to ATD0 channel[17].

1.9 BDM Clock Configuration

The BDM alternate clock source is the oscillator clock.

1.10 Oscillator Configuration

The $\overline{\text{XCLKS}}$ is an input signal which controls whether a crystal in combination with the internal loop controlled (low power) Pierce oscillator is used or whether full swing Pierce oscillator/external clock circuitry is used.

The $\overline{\text{XCLKS}}$ signal selects the oscillator configuration during reset low phase while a clock quality check is ongoing. This is the case for:

- Power on reset or low-voltage reset
- Clock monitor reset
- Any reset while in self-clock mode or full stop mode

The selected oscillator configuration is frozen with the rising edge of the $\overline{\text{RESET}}$ pin in any of these above described reset cases.

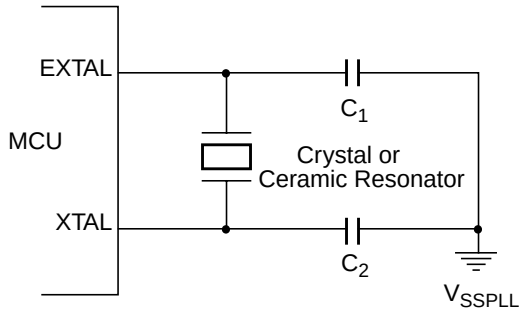

Figure 1-7. Loop Controlled Pierce Oscillator Connections ($\overline{\text{XCLKS}}$ = 1)

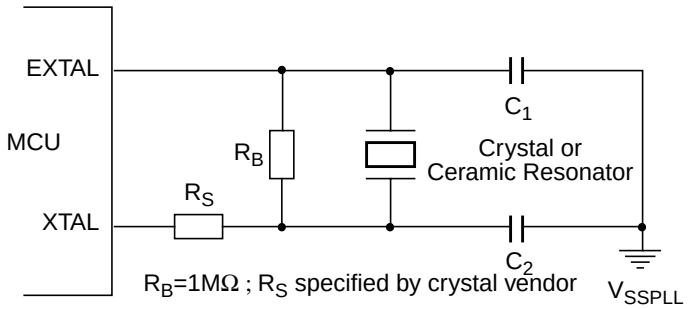

Figure 1-8. Full Swing Pierce Oscillator Connections ($\overline{\text{XCLKS}}$ = 0)

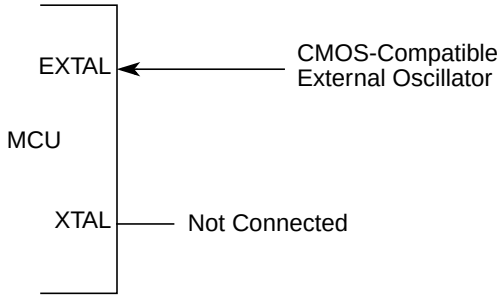

Figure 1-9. External Clock Connections ($\overline{\text{XCLKS}}$ = 0)

Chapter 2
Port Integration Module (S12XSPIMV1)

Revision History

Revision Number	Revision Date	Sections Affected	Description of Changes
V01.07	08 Feb 2011	2.3.55/2-111 2.3.56/2-111 2.3.57/2-112	• Corrected addresses of PPSH,PIEH and PIFH in Register Descriptions
V01.08	08 Jul 2011	Table 2-2./2-65	• Corrected typo in PPSP register name in register map
V01.09	11 Sep 2012		• Minor editorial corrections

2.1 Introduction

2.1.1 Overview

The S12XS family Port Integration Module establishes the interface between the peripheral modules and the I/O pins for all ports. It controls the electrical pin properties as well as the signal prioritization and multiplexing on shared pins.

This document covers:

- Port A, B and K used as general purpose I/O
- Port E associated with the $\overline{\text{IRQ}}$, $\overline{\text{XIRQ}}$ interrupt inputs
- Port T associated with 1 timer module
- Port S associated with 2 SCI module and 1 SPI module
- Port M associated with 1 MSCAN
- Port P connected to the PWM - inputs can be used as an external interrupt source
- Port H and J used as general purpose I/O - inputs can be used as an external interrupt source
- Port AD associated with one 16-channel ATD module

Most I/O pins can be configured by register bits to select data direction and drive strength, to enable and select pull-up or pull-down devices.

NOTE

This document assumes the availability of all features (112-pin package option). Some functions are not available on lower pin count package options. Refer to the pin-out summary section.

2.1.2 Features

The Port Integration Module includes these distinctive registers:

- Data and data direction registers for Ports A, B, E, K, T, S, M, P, H, J, and AD when used as general-purpose I/O
- Control registers to enable/disable pull-device and select pull-ups/pull-downs on Ports T, S, M, P, H, and J on per-pin basis
- Control registers to enable/disable pull-up devices on Port AD on per-pin basis
- Single control register to enable/disable pull-ups on Ports A, B, E, and K on per-port basis and on BKGD pin
- Control registers to enable/disable reduced output drive on Ports T, S, M, P, H, J, and AD on per-pin basis
- Single control register to enable/disable reduced output drive on Ports A, B, E, and K on per-port basis
- Control registers to enable/disable open-drain (wired-or) mode on Ports S, and M
- Interrupt flag register for pin interrupts on Ports P, H, and J
- Control register to configure $\overline{\text{IRQ}}$ pin operation
- Routing registers to support module port relocation
- Free-running clock outputs

A standard port pin has the following minimum features:

- Input/output selection
- 5V output drive with two selectable drive strengths
- 5V digital and analog input
- Input with selectable pull-up or pull-down device

Optional features supported on dedicated pins:

- Open drain for wired-or connections
- Interrupt inputs with glitch filtering

2.2 External Signal Description

This section lists and describes the signals that connect off-chip.

Table 2-1 shows all the pins and their functions that are controlled by the Port Integration Module. *Refer to the device definition for the availability of the individual pins in the different package options.*

NOTE

If there is more than one function associated with a pin, the priority is indicated by the position in the table from top (highest priority) to bottom (lowest priority)

Table 2-1. Pin Functions and Priorities

Port	Pin Name	Pin Function & Priority[1]	I/O	Description	Pin Function after Reset
-	BKGD	MODC [2]	I	MODC input during $\overline{\text{RESET}}$	BKGD
		BKGD	I/O	S12X_BDM communication pin	
A	PA[7:0]	GPIO	I/O	General purpose	GPIO
B	PB[7:0]	GPIO	I/O	General purpose	GPIO
E	PE[7]	$\overline{\text{XCLKS}}$ [2]	I	External clock selection input during $\overline{\text{RESET}}$	GPIO
		ECLKX2	O	Free-running clock at core clock rate (ECLK x 2)	
		GPIO	I/O	General purpose	
	PE[6:5]	GPIO	I/O	General purpose	
	PE[4]	ECLK	O	Free-running clock at bus clock rate or programmable down-scaled bus clock	
		GPIO	I/O	General purpose	
	PE[3:2]	GPIO	I/O	General purpose	
	PE[1]	$\overline{\text{IRQ}}$	I	Maskable level- or falling edge-sensitive interrupt	
		GPI	I	General-purpose	
	PE[0]	$\overline{\text{XIRQ}}$	I	Non-maskable level-sensitive interrupt	
		GPI	I	General-purpose	
K	PK[7,5:0]	GPIO	I/O	General purpose	GPIO

Table 2-1. Pin Functions and Priorities (continued)

Port	Pin Name	Pin Function & Priority[1]	I/O	Description	Pin Function after Reset
T	PT7	IOC7	I/O	Timer Channel 7	GPIO
		(PWM7)	I/O	Pulse Width Modulator channel 7; emergency shut-down	
		GPIO	I/O	General purpose	
	PT6	IOC6	I/O	Timer Channel 6	
		(PWM6)	O	Pulse Width Modulator channel 6	
		GPIO	I/O	General purpose	
	PT5	IOC5	I/O	Timer Channel 5	
		(PWM5)	O	Pulse Width Modulator channel 5	
		VREG_API	O	VREG Autonomous Periodical Interrupt Clock	
		GPIO	I/O	General purpose	
	PT4	IOC4	I/O	Timer Channel 4	
		(PWM4)	O	Pulse Width Modulator channel 4	
		GPIO	I/O	General purpose	
	PT[3:0]	IOC[3:0]	I/O	Timer Channel 3 - 0	
		GPIO	I/O	General purpose	
S	PS7	$\overline{SS0}$	I/O	Serial Peripheral Interface 0 slave select output in master mode, input in slave mode or master mode.	GPIO
		GPIO	I/O	General purpose	
	PS6	SCK0	I/O	Serial Peripheral Interface 0 serial clock pin	
		GPIO	I/O	General purpose	
	PS5	MOSI0	I/O	Serial Peripheral Interface 0 master out/slave in pin	
		GPIO	I/O	General purpose	
	PS4	MISO0	I/O	Serial Peripheral Interface 0 master in/slave out pin	
		GPIO	I/O	General purpose	
	PS3	TXD1	O	Serial Communication Interface 1 transmit pin	
		GPIO	I/O	General purpose	
	PS2	RXD1	I	Serial Communication Interface 1 receive pin	
		GPIO	I/O	General purpose	
	PS1	TXD0	O	Serial Communication Interface 0 transmit pin	
		GPIO	I/O	General purpose	
	PS0	RXD0	I	Serial Communication Interface 0 receive pin	
		GPIO	I/O	General purpose	

Table 2-1. Pin Functions and Priorities (continued)

Port	Pin Name	Pin Function & Priority[1]	I/O	Description	Pin Function after Reset
M	PM[7:6]	GPIO	I/O	General purpose	GPIO
	PM5	(SCK0)	I/O	Serial Peripheral Interface 0 serial clock pin	
		GPIO	I/O	General purpose	
	PM4	(MOSI0)	I/O	Serial Peripheral Interface 0 master out/slave in pin	
		GPIO	I/O	General purpose	
	PM3	($\overline{SS0}$)	I/O	Serial Peripheral Interface 0 slave select output in master mode, input in slave mode or master mode.	
		GPIO	I/O	General purpose	
	PM2	(MISO0)	I/O	Serial Peripheral Interface 0 master in/slave out pin	
		GPIO	I/O	General purpose	
	PM1	TXCAN0	O	MSCAN0 transmit pin	
		(TXD1)	O	Serial Communication Interface 1 transmit pin	
		GPIO	I/O	General purpose	
	PM0	RXCAN0	I	MSCAN0 receive pin	
		(RXD1)	I	Serial Communication Interface 1 receive pin	
		GPIO	I/O	General purpose	

Table 2-1. Pin Functions and Priorities (continued)

Port	Pin Name	Pin Function & Priority[1]	I/O	Description	Pin Function after Reset
P	PP7	PWM7	I/O	Pulse Width Modulator channel 7; emergency shut-down	GPIO
		GPIO/KWP7	I/O	General purpose; with interrupt	
	PP[6:3]	PWM[6:3]	O	Pulse Width Modulator channel 6 - 3	
		GPIO/KWP[6:3]	I/O	General purpose; with interrupt	
	PP2	PWM2	O	Pulse Width Modulator channel 2	
		(IOC2)	I/O	Timer Channel 2	
		(TXD1)	O	Serial Communication Interface 1 transmit pin	
		GPIO/KWP2	I/O	General purpose; with interrupt	
	PP1	PWM1	O	Pulse Width Modulator channel 1	
		(IOC1)	I/O	Timer Channel 1	
		GPIO/KWP1	I/O	General purpose; with interrupt	
	PP0	PWM0	O	Pulse Width Modulator channel 0	
		(IOC0)	I/O	Timer Channel 0	
		(RXD1)	I	Serial Communication Interface 1 receive pin	
		GPIO/KWP0	I/O	General purpose; with interrupt	
H	PH[7:0]	GPIO/KWH[7:0]	I/O	General purpose; with interrupt	GPIO
J	PJ[7:6]	GPIO/KWJ[7:6]	I/O	General purpose; with interrupt	GPIO
	PJ[1:0]	GPIO/KWJ[1:0]	I/O	General purpose; with interrupt	
AD	PAD[15:0]	GPIO	I/O	General purpose	GPIO
		AN[15:0]	I	ATD analog	

1 Signals in brackets denote alternative module routing pins.
2 Function active when $\overline{\text{RESET}}$ asserted.

2.3 Memory Map and Register Definition

This section provides a detailed description of all Port Integration Module registers.

2.3.1 Memory Map

Table 2-2 shows the register map of the Port Integration Module.

Table 2-2. Block Memory Map

Port	Offset or Address	Register	Access	Reset Value	Section/Page
A B	0x0000	PORTA—Port A Data Register	R/W	0x00	2.3.3/2-75
	0x0001	PORTB—Port B Data Register	R/W	0x00	2.3.4/2-75
	0x0002	DDRA—Port A Data Direction Register	R/W	0x00	2.3.5/2-76
	0x0003	DDRB—Port B Data Direction Register	R/W	0x00	2.3.6/2-76
	0x0004 : 0x0007	PIM Reserved	R	0x00	2.3.7/2-77
E	0x0008	PORTE—Port E Data Register	R/W[1]	0x00	2.3.8/2-77
	0x0009	DDRE—Port E Data Direction Register	R/W[1]	0x00	2.3.9/2-78
	0x000A : 0x000B	Non-PIM address range[2]	-	-	-
A B E K	0x000C	PUCR—Pull-up Control Register	R/W[1]	0xD0	2.3.10/2-79
	0x000D	RDRIV—Reduced Drive Register	R/W[1]	0x00	2.3.11/2-80
	0x000E : 0x001B	Non-PIM address range[2]	-	-	-
E	0x001C	ECLKCTL—ECLK Control Register	R/W[1]	0b[3]100_0000	2.3.12/2-81
	0x001D	PIM Reserved	R	0x00	2.3.13/2-82
	0x001E	IRQCR—IRQ Control Register	R/W[1]	0x40	2.3.14/2-83
	0x001F	PIM Reserved	R	0x00	2.3.15/2-83
	0x0020 : 0x0031	Non-PIM address range[2]	-	-	-
K	0x0032	PORTK—Port K Data Register	R/W	0x00	2.3.16/2-84
	0x0033	DDRK—Port K Data Direction Register	R/W	0x00	2.3.17/2-84
	0x0034 : 0x023F	Non-PIM address range[2]	-	-	-

Table 2-2. Block Memory Map (continued)

Port	Offset or Address	Register	Access	Reset Value	Section/Page
T	0x0240	PTT—Port T Data Register	R/W	0x00	2.3.18/2-85
	0x0241	PTIT—Port T Input Register	R	[4]	2.3.19/2-86
	0x0242	DDRT—Port T Data Direction Register	R/W	0x00	2.3.20/2-87
	0x0243	RDRT—Port T Reduced Drive Register	R/W	0x00	2.3.21/2-87
	0x0244	PERT—Port T Pull Device Enable Register	R/W	0x00	2.3.22/2-88
	0x0245	PPST—Port T Polarity Select Register	R/W	0x00	2.3.23/2-88
	0x0246	PIM Reserved	R	0x00	2.3.24/2-89
	0x0247	Port T Routing Register	R/W	0x00	2.3.25/2-89
S	0x0248	PTS—Port S Data Register	R/W	0x00	2.3.26/2-91
	0x0249	PTIS—Port S Input Register	R	[4]	2.3.27/2-92
	0x024A	DDRS—Port S Data Direction Register	R/W	0x00	2.3.28/2-93
	0x024B	RDRS—Port S Reduced Drive Register	R/W	0x00	2.3.29/2-94
	0x024C	PERS—Port S Pull Device Enable Register	R/W	0xFF	2.3.30/2-94
	0x024D	PTPS—Port S Polarity Select Register	R/W	0x00	2.3.31/2-95
	0x024E	WOMS—Port S Wired-Or Mode Register	R/W	0x00	2.3.32/2-95
	0x024F	PIM Reserved	R	0x00	2.3.33/2-96
M	0x0250	PTM—Port M Data Register	R/W	0x00	2.3.34/2-96
	0x0251	PTIM—Port M Input Register	R	[4]	2.3.35/2-98
	0x0252	DDRM—Port M Data Direction Register	R/W	0x00	2.3.36/2-98
	0x0253	RDRM—Port M Reduced Drive Register	R/W	0x00	2.3.37/2-99
	0x0254	PERM—Port M Pull Device Enable Register	R/W	0x00	2.3.38/2-100
	0x0255	PPSM—Port M Polarity Select Register	R/W	0x00	2.3.39/2-100
	0x0256	WOMM—Port M Wired-Or Mode Register	R/W	0x00	2.3.40/2-101
	0x0257	MODRR—Module Routing Register	R/W	0x00	2.3.41/2-101
P	0x0258	PTP—Port P Data Register	R/W	0x00	2.3.42/2-102
	0x0259	PTIP—Port P Input Register	R	[4]	2.3.43/2-104
	0x025A	DDRP—Port P Data Direction Register	R/W	0x00	2.3.44/2-105
	0x025B	RDRP—Port P Reduced Drive Register	R/W	0x00	2.3.45/2-106
	0x025C	PERP—Port P Pull Device Enable Register	R/W	0x00	2.3.46/2-106
	0x025D	PPSP—Port P Polarity Select Register	R/W	0x00	2.3.47/2-107
	0x025E	PIEP—Port P Interrupt Enable Register	R/W	0x00	2.3.48/2-107
	0x025F	PIFP—Port P Interrupt Flag Register	R/W	0x00	2.3.49/2-108

Table 2-2. Block Memory Map (continued)

Port	Offset or Address	Register	Access	Reset Value	Section/Page
H	0x0260	PTH—Port H Data Register	R/W	0x00	2.3.50/2-108
	0x0261	PTIH—Port H Input Register	R	[4]	2.3.51/2-109
	0x0262	DDRH—Port H Data Direction Register	R/W	0x00	2.3.52/2-109
	0x0263	RDRH—Port H Reduced Drive Register	R/W	0x00	2.3.53/2-110
	0x0264	PERH—Port H Pull Device Enable Register	R/W	0x00	2.3.54/2-110
	0x0265	PPSH—Port H Polarity Select Register	R/W	0x00	2.3.55/2-111
	0x0266	PIEH—Port H Interrupt Enable Register	R/W	0x00	2.3.56/2-111
	0x0267	PIFH—Port H Interrupt Flag Register	R/W	0x00	2.3.57/2-112
J	0x0268	PTJ—Port J Data Register	R/W	0x00	2.3.58/2-112
	0x0269	PTIJ—Port J Input Register	R	[4]	2.3.59/2-113
	0x026A	DDRJ—Port J Data Direction Register	R/W	0x00	2.3.60/2-113
	0x026B	RDRJ—Port J Reduced Drive Register	R/W	0x00	2.3.61/2-114
	0x026C	PERJ—Port J Pull Device Enable Register	R/W	0xFF	2.3.62/2-114
	0x026D	PPSJ—Port J Polarity Select Register	R/W	0x00	2.3.63/2-115
	0x026E	PIEJ—Port J Interrupt Enable Register	R/W	0x00	2.3.64/2-115
	0x026F	PIFJ—Port J Interrupt Flag Register	R/W	0x00	2.3.65/2-116
AD	0x0270	PT0AD0—Port AD0 Data Register 0	R/W	0x00	2.3.66/2-116
	0x0271	PT1AD0—Port AD0 Data Register 1	R/W	0x00	2.3.67/2-117
	0x0272	DDR0AD0—Port AD0 Data Direction Register 0	R/W	0x00	2.3.68/2-117
	0x0273	DDR1AD0—Port AD0 Data Direction Register 1	R/W	0x00	2.3.69/2-118
	0x0274	RDR0AD0—Port AD0 Reduced Drive Register 0	R/W	0x00	2.3.70/2-118
	0x0275	RDR1AD0—Port AD0 Reduced Drive Register 1	R/W	0x00	2.3.71/2-119
	0x0276	PER0AD0—Port AD0 Pull Up Enable Register 0	R/W	0x00	2.3.72/2-119
	0x0277	PER1AD0—Port AD0 Pull Up Enable Register 1	R/W	0x00	2.3.73/2-120
	0x0278 : 0x027F	PIM Reserved	R	0x00	2.3.74/2-120

[1] Write access not applicable for one or more register bits. Refer to register description.
[2] Refer to memory map in SoC Guide to determine related module.
[3] Mode dependent.
[4] Read always returns logic level on pins.

Register Name		Bit 7	6	5	4	3	2	1	Bit 0
0x0000 PORTA	R/W	PA7	PA6	PA5	PA4	PA3	PA2	PA1	PA0
0x0001 PORTB	R/W	PB7	PB6	PB5	PB4	PB3	PB2	PB1	PB0
0x0002 DDRA	R/W	DDRA7	DDRA6	DDRA5	DDRA4	DDRA3	DDRA2	DDRA1	DDRA0
0x0003 DDRB	R/W	DDRB7	DDRB6	DDRB5	DDRB4	DDRB3	DDRB2	DDRB1	DDRB0
0x0004 Reserved	R	0	0	0	0	0	0	0	0
	W								
0x0005 Reserved	R	0	0	0	0	0	0	0	0
	W								
0x0006 Reserved	R	0	0	0	0	0	0	0	0
	W								
0x0007 Reserved	R	0	0	0	0	0	0	0	0
	W								
0x0008 PORTE	R	PE7	PE6	PE5	PE4	PE3	PE2	PE1	PE0
	W								
0x0009 DDRE	R	DDRE7	DDRE6	DDRE5	DDRE4	DDRE3	DDRE2	0	0
	W								
0x000A 0x000B Non-PIM Address Range	R/W	Non-PIM Address Range							
0x000C PUCR	R	PUPKE	BKPUE	0	PUPEE	0	0	PUPBE	PUPAE
	W								
0x000D RDRIV	R	RDPK	0	0	RDPE	0	0	RDPB	RDPA
	W								
0x000E–0x001B Non-PIM Address Range	R/W	Non-PIM Address Range							

= Unimplemented or Reserved

Register Name		Bit 7	6	5	4	3	2	1	Bit 0
0x001C ECLKCTL	R/W	NECLK	NCLKX2	DIV16	EDIV4	EDIV3	EDIV2	EDIV1	EDIV0
0x001D Reserved	R	0	0	0	0	0	0	0	0
	W								
0x001E IRQCR	R	IRQE	IRQEN	0	0	0	0	0	0
	W								
0x001F Reserved	R	0	0	0	0	0	0	0	0
	W								
0x0020–0x0031 Non-PIM Address Range	R/W	Non-PIM Address Range							
0x0032 PORTK	R	PK7	0	PK5	PK4	PK3	PK2	PK1	PK0
	W								
0x0033 DDRK	R	DDRK7	0	DDRK5	DDRK4	DDRK3	DDRK2	DDRK1	DDRK0
	W								
0x0034–0x023F Non-PIM Address Range	R/W	Non-PIM Address Range							
0x0240 PTT	R/W	PTT7	PTT6	PTT5	PTT4	PTT3	PTT2	PTT1	PTT0
0x0241 PTIT	R	PTIT7	PTIT6	PTIT5	PTIT4	PTIT3	PTIT2	PTIT1	PTIT0
	W								
0x0242 DDRT	R/W	DDRT7	DDRT6	DDRT5	DDRT4	DDRT3	DDRT2	DDRT1	DDRT0
0x0243 RDRT	R/W	RDRT7	RDRT6	RDRT5	RDRT4	RDRT3	RDRT2	RDRT1	RDRT0
0x0244 PERT	R/W	PERT7	PERT6	PERT5	PERT4	PERT3	PERT2	PERT1	PERT0
0x0245 PPST	R/W	PPST7	PPST6	PPST5	PPST4	PPST3	PPST2	PPST1	PPST0

= Unimplemented or Reserved

Register Name		Bit 7	6	5	4	3	2	1	Bit 0
0x0246 Reserved	R	0	0	0	0	0	0	0	0
	W								
0x0247 PTTRR	R	PTTRR7	PTTRR6	PTTRR5	PTTRR4	0	PTTRR2	PTTRR1	PTTRR0
	W								
0x0248 PTS	R	PTS7	PTS6	PTS5	PTS4	PTS3	PTS2	PTS1	PTS0
	W								
0x0249 PTIS	R	PTIS7	PTIS6	PTIS5	PTIS4	PTIS3	PTIS2	PTIS1	PTIS0
	W								
0x024A DDRS	R	DDRS7	DDRS6	DDRS5	DDRS4	DDRS3	DDRS2	DDRS1	DDRS0
	W								
0x024B RDRS	R	RDRS7	RDRS6	RDRS5	RDRS4	RDRS3	RDRS2	RDRS1	RDRS0
	W								
0x024C PERS	R	PERS7	PERS6	PERS5	PERS4	PERS3	PERS2	PERS1	PERS0
	W								
0x024D PPSS	R	PPSS7	PPSS6	PPSS5	PPSS4	PPSS3	PPSS2	PPSS1	PPSS0
	W								
0x024E WOMS	R	WOMS7	WOMS6	WOMS5	WOMS4	WOMS3	WOMS2	WOMS1	WOMS0
	W								
0x024F Reserved	R	0	0	0	0	0	0	0	0
	W								
0x0250 PTM	R	PTM7	PTM6	PTM5	PTM4	PTM3	PTM2	PTM1	PTM0
	W								
0x0251 PTIM	R	PTIM7	PTIM6	PTIM5	PTIM4	PTIM3	PTIM2	PTIM1	PTIM0
	W								
0x0252 DDRM	R	DDRM7	DDRM6	DDRM5	DDRM4	DDRM3	DDRM2	DDRM1	DDRM0
	W								
0x0253 RDRM	R	RDRM7	RDRM6	RDRM5	RDRM4	RDRM3	RDRM2	RDRM1	RDRM0
	W								
0x0254 PERM	R	PERM7	PERM6	PERM5	PERM4	PERM3	PERM2	PERM1	PERM0
	W								
0x0255 PPSM	R	PPSM7	PPSM6	PPSM5	PPSM4	PPSM3	PPSM2	PPSM1	PPSM0
	W								

= Unimplemented or Reserved

Register Name		Bit 7	6	5	4	3	2	1	Bit 0
0x0256 WOMM	R/W	WOMM7	WOMM6	WOMM5	WOMM4	WOMM3	WOMM2	WOMM1	WOMM0
0x0257 MODRR	R	MODRR7	MODRR6	0	MODRR4	0	0	0	0
	W								
0x0258 PTP	R/W	PTP7	PTP6	PTP5	PTP4	PTP3	PTP2	PTP1	PTP0
0x0259 PTIP	R	PTIP7	PTIP6	PTIP5	PTIP4	PTIP3	PTIP2	PTIP1	PTIP0
	W								
0x025A DDRP	R/W	DDRP7	DDRP6	DDRP5	DDRP4	DDRP3	DDRP2	DDRP1	DDRP0
0x025B RDRP	R/W	RDRP7	RDRP6	RDRP5	RDRP4	RDRP3	RDRP2	RDRP1	RDRP0
0x025C PERP	R/W	PERP7	PERP6	PERP5	PERP4	PERP3	PERP2	PERP1	PERP0
0x025D PPSP	R/W	PPSP7	PPSP6	PPSP5	PPSP4	PPSP3	PPSP2	PPSP1	PPSP0
0x025E PIEP	R/W	PIEP7	PIEP6	PIEP5	PIEP4	PIEP3	PIEP2	PIEP1	PIEP0
0x025F PIFP	R/W	PIFP7	PIFP6	PIFP5	PIFP4	PIFP3	PIFP2	PIFP1	PIFP0
0x0260 PTH	R/W	PTH7	PTH6	PTH5	PTH4	PTH3	PTH2	PTH1	PTH0
0x0261 PTIH	R	PTIH7	PTIH6	PTIH5	PTIH4	PTIH3	PTIH2	PTIH1	PTIH0
	W								
0x0262 DDRH	R/W	DDRH7	DDRH6	DDRH5	DDRH4	DDRH3	DDRH2	DDRH1	DDRH0
0x0263 RDRH	R/W	RDRH7	RDRH6	RDRH5	RDRH4	RDRH3	RDRH2	RDRH1	RDRH0
0x0264 PERH	R/W	PERH7	PERH6	PERH5	PERH4	PERH3	PERH2	PERH1	PERH0

= Unimplemented or Reserved

Register Name		Bit 7	6	5	4	3	2	1	Bit 0
0x0265 PPSH	R/W	PPSH7	PPSH6	PPSH5	PPSH4	PPSH3	PPSH2	PPSH1	PPSH0
0x0266 PIEH	R/W	PIEH7	PIEH6	PIEH5	PIEH4	PIEH3	PIEH2	PIEH1	PIEH0
0x0267 PIFH	R/W	PIFH7	PIFH6	PIFH5	PIFH4	PIFH3	PIFH2	PIFH1	PIFH0
0x0268 PTJ	R	PTJ7	PTJ6	0	0	0	0	PTJ1	PTJ0
	W								
0x0269 PTIJ	R	PTIJ7	PTIJ6	0	0	0	0	PTIJ1	PTIJ0
	W								
0x026A DDRJ	R	DDRJ7	DDRJ6	0	0	0	0	DDRJ1	DDRJ0
	W								
0x026B RDRJ	R	RDRJ7	RDRJ6	0	0	0	0	RDRJ1	RDRJ0
	W								
0x026C PERJ	R	PERJ7	PERJ6	0	0	0	0	PERJ1	PERJ0
	W								
0x026D PPSJ	R	PPSJ7	PPSJ6	0	0	0	0	PPSJ1	PPSJ0
	W								
0x026E PIEJ	R	PIEJ7	PIEJ6	0	0	0	0	PIEJ1	PIEJ0
	W								
0x026F PIFJ	R	PIFJ7	PIFJ6	0	0	0	0	PIFJ1	PIFJ0
	W								
0x0270 PT0AD0	R/W	PT0AD07	PT0AD06	PT0AD05	PT0AD04	PT0AD03	PT0AD02	PT0AD01	PT0AD00
0x0271 PT1AD0	R/W	PT1AD07	PT1AD06	PT1AD05	PT1AD04	PT1AD03	PT1AD02	PT1AD01	PT1AD00
0x0272 DDR0AD0	R/W	DDR0AD07	DDR0AD06	DDR0AD05	DDR0AD04	DDR0AD03	DDR0AD02	DDR0AD01	DDR0AD00
0x0273 DDR1AD0	R/W	DDR1AD07	DDR1AD06	DDR1AD05	DDR1AD04	DDR1AD03	DDR1AD02	DDR1AD01	DDR1AD00
0x0274 RDR0AD0	R/W	RDR0AD07	RDR0AD06	RDR0AD05	RDR0AD04	RDR0AD03	RDR0AD02	RDR0AD01	RDR0AD00

= Unimplemented or Reserved

Register Name		Bit 7	6	5	4	3	2	1	Bit 0
0x0275 RDR1AD0	R/W	RDR1AD07	RDR1AD06	RDR1AD05	RDR1AD04	RDR1AD03	RDR1AD02	RDR1AD01	RDR1AD00
0x0276 PER0AD0	R/W	PER0AD07	PER0AD06	PER0AD05	PER0AD04	PER0AD03	PER0AD02	PER0AD01	PER0AD00
0x0277 PER1AD0	R/W	PER1AD07	PER1AD06	PER1AD05	PER1AD04	PER1AD03	PER1AD02	PER1AD01	PER1AD00
0x0278 Reserved	R	0	0	0	0	0	0	0	0
	W								
0x0279 Reserved	R	0	0	0	0	0	0	0	0
	W								
0x027A Reserved	R	0	0	0	0	0	0	0	0
	W								
0x027B Reserved	R	0	0	0	0	0	0	0	0
	W								
0x027C Reserved	R	0	0	0	0	0	0	0	0
	W								
0x027D Reserved	R	0	0	0	0	0	0	0	0
	W								
0x027E Reserved	R	0	0	0	0	0	0	0	0
	W								
0x027F Reserved	R	0	0	0	0	0	0	0	0
	W								

= Unimplemented or Reserved

2.3.2 Register Descriptions

The following table summarizes the effect of the various configuration bits, i.e. data direction (DDR), output level (IO), reduced drive (RDR), pull enable (PE), pull select (PS) on the pin function and pull device activity.

The configuration bit PS is used for two purposes:

1. Configure the sensitive interrupt edge (rising or falling), if interrupt enabled.
2. Select either a pull-up or pull-down device if PE is active.

Table 2-3. Pin Configuration Summary

DDR	IO	RDR	PE	PS[1]	IE[2]	Function	Pull Device	Interrupt
0	x	x	0	x	0	Input	Disabled	Disabled
0	x	x	1	0	0	Input	Pull Up	Disabled
0	x	x	1	1	0	Input	Pull Down	Disabled
0	x	x	0	0	1	Input	Disabled	Falling edge
0	x	x	0	1	1	Input	Disabled	Rising edge
0	x	x	1	0	1	Input	Pull Up	Falling edge
0	x	x	1	1	1	Input	Pull Down	Rising edge
1	0	0	x	x	0	Output, full drive to 0	Disabled	Disabled
1	1	0	x	x	0	Output, full drive to 1	Disabled	Disabled
1	0	1	x	x	0	Output, reduced drive to 0	Disabled	Disabled
1	1	1	x	x	0	Output, reduced drive to 1	Disabled	Disabled
1	0	0	x	0	1	Output, full drive to 0	Disabled	Falling edge
1	1	0	x	1	1	Output, full drive to 1	Disabled	Rising edge
1	0	1	x	0	1	Output, reduced drive to 0	Disabled	Falling edge
1	1	1	x	1	1	Output, reduced drive to 1	Disabled	Rising edge

[1] Always “0” on Port A, B, E, K, and AD.

[2] Applicable only on Port P, H, and J.

NOTE

All register bits in this module are completely synchronous to internal clocks during a register read.

NOTE

Figures of port data registers also display the alternative functions if applicable on the related pin as defined in Table 2-1. Names in brackets denote the availability of the function when using a specific routing option.

NOTE

Figures of module routing registers also display the module instance or module channel associated with the related routing bit.

2.3.3 Port A Data Register (PORTA)

Address 0x0000 (PRR) Access: User read/write[1]

	7	6	5	4	3	2	1	0
R/W	PA7	PA6	PA5	PA4	PA3	PA2	PA1	PA0
Reset	0	0	0	0	0	0	0	0

Figure 2-1. Port A Data Register (PORTA)

[1] Read: Anytime, the data source depends on the data direction value
Write: Anytime

Table 2-4. PORTA Register Field Descriptions

Field	Description
7-0 PA	**Port A general purpose input/output data**—Data Register The associated pin can be used as general purpose I/O. In general purpose output mode the register bit value is driven to the pin. If the associated data direction bit is set to 1, a read returns the value of the port register bit, otherwise the buffered pin input state is read.

2.3.4 Port B Data Register (PORTB)

Address 0x0001 (PRR) Access: User read/write[1]

	7	6	5	4	3	2	1	0
R/W	PB7	PB6	PB5	PB4	PB3	PB2	PB1	PB0
Reset	0	0	0	0	0	0	0	0

Figure 2-2. Port B Data Register (PORTB)

[1] Read: Anytime, the data source depends on the data direction value
Write: Anytime

Table 2-5. PORTB Register Field Descriptions

Field	Description
7-0 PB	**Port B general purpose input/output data**—Data Register The associated pin can be used as general purpose I/O. In general purpose output mode the register bit value is driven to the pin. If the associated data direction bit is set to 1, a read returns the value of the port register bit, otherwise the buffered pin input state is read.

2.3.5 Port A Data Direction Register (DDRA)

Address 0x0002 (PRR) Access: User read/write[1]

	7	6	5	4	3	2	1	0
R W	DDRA7	DDRA6	DDRA5	DDRA4	DDRA3	DDRA2	DDRA1	DDRA0
Reset	0	0	0	0	0	0	0	0

Figure 2-3. Port A Data Direction Register (DDRA)

[1] Read: Anytime, the data source depends on the data direction value
Write: Anytime

Table 2-6. DDRA Register Field Descriptions

Field	Description
7-0 DDRA	**Port A Data Direction**— This bit determines whether the associated pin is an input or output. 1 Associated pin configured as output 0 Associated pin configured as input

2.3.6 Port B Data Direction Register (DDRB)

Address 0x0003 (PRR) Access: User read/write[1]

	7	6	5	4	3	2	1	0
R W	DDRB7	DDRB6	DDRB5	DDRB4	DDRB3	DDRB2	DDRB1	DDRB0
Reset	0	0	0	0	0	0	0	0

Figure 2-4. Port B Data Direction Register (DDRB)

[1] Read: Anytime, the data source depends on the data direction value
Write: Anytime

Table 2-7. DDRB Register Field Descriptions

Field	Description
7-0 DDRB	**Port B Data Direction**— This bit determines whether the associated pin is an input or output. 1 Associated pin configured as output 0 Associated pin configured as input

2.3.7 PIM Reserved Registers

Address 0x0004 (PRR) to 0x0007 (PRR) — Access: User read[1]

	7	6	5	4	3	2	1	0
R	0	0	0	0	0	0	0	0
W								
Reset	0	0	0	0	0	0	0	0

= Unimplemented or Reserved

Figure 2-5. PIM Reserved Registers

[1] Read: Always reads 0x00
Write: Unimplemented

2.3.8 Port E Data Register (PORTE)

Address 0x0008 (PRR) — Access: User read/write[1]

	7	6	5	4	3	2	1	0
R/W	PE7	PE6	PE5	PE4	PE3	PE2	PE1	PE0
Altern. Function	$\overline{\text{XCLKS}}$	—	—	ECLK	—	—	$\overline{\text{IRQ}}$	$\overline{\text{XIRQ}}$
	ECLKX2	—	—	—	—	—	—	—
Reset	0	0	0	0	0	0	—[2]	—[2]

= Unimplemented or Reserved

Figure 2-6. Port E Data Register (PORTE)

[1] Read: Anytime, the data source depends on the data direction value
Write: Anytime

[2] These registers are reset to zero. Two bus clock cycles after reset release the register values are updated with the associated pin values.

Table 2-8. PORTE Register Field Descriptions

Field	Description
7 PE	**Port E general purpose input/output data**—Data Register, ECLKX2 output, $\overline{\text{XCLKS}}$ input When not used with the alternative function, the associated pin can be used as general purpose I/O. In general purpose output mode the register bit value is driven to the pin. If the associated data direction bit is set to 1, a read returns the value of the port register bit, otherwise the buffered pin input state is read. • The ECLKX2 output function takes precedence over the general purpose I/O function if enabled. • The external clock selection feature ($\overline{\text{XCLKS}}$) is only active during $\overline{\text{RESET}}$=0
6-5, 3-2 PE	**Port E general purpose input/output data**—Data Register The associated pin can be used as general purpose I/O. In general purpose output mode the register bit value is driven to the pin. If the associated data direction bit is set to 1, a read returns the value of the port register bit, otherwise the buffered pin input state is read.
4 PE	**Port E general purpose input/output data**—Data Register, ECLK output When not used with the alternative function, the associated pin can be used as general purpose I/O. In general purpose output mode the register bit value is driven to the pin. If the associated data direction bit is set to 1, a read returns the value of the port register bit, otherwise the buffered pin input state is read. • The ECLK output function takes precedence over the general purpose I/O function if enabled.
1 PE	**Port E general purpose input data and interrupt**—Data Register, $\overline{\text{IRQ}}$ input. This pin can be used as general purpose and $\overline{\text{IRQ}}$ input.
0 PE	**Port E general purpose input data and interrupt**—Data Register, $\overline{\text{XIRQ}}$ input. This pin can be used as general purpose and $\overline{\text{XIRQ}}$ input.

2.3.9 Port E Data Direction Register (DDRE)

Address 0x0009 (PRR) Access: User read/write[1]

	7	6	5	4	3	2	1	0
R	DDRE7	DDRE6	DDRE5	DDRE4	DDRE3	DDRE2	0	0
W								
Reset	0	0	0	0	0	0	0	0

= Unimplemented or Reserved

Figure 2-7. Port E Data Direction Register (DDRE)

[1] Read: Anytime, the data source depends on the data direction value
Write: Anytime

Table 2-9. DDRE Register Field Descriptions

Field	Description
7-2 DDRE	**Port E Data Direction**— This bit determines whether the associated pin is an input or output. 1 Associated pin configured as output 0 Associated pin configured as input

2.3.10 Ports ABEK, BKGD pin Pull-up Control Register (PUCR)

Address 0x000C (PRR) Access: User read/write[1]

	7	6	5	4	3	2	1	0
R W	PUPKE	BKPUE	0	PUPEE	0	0	PUPBE	PUPAE
Reset	1	1	0	1	0	0	0	0

= Unimplemented or Reserved

Figure 2-8. Ports ABEK, BKGD pin Pull-up Control Register (PUCR)

[1] Read: Anytime in single-chip modes
Write: Anytime, except BKPUE which is writable in Special Single-Chip Mode only

Table 2-10. PUCR Register Field Descriptions

Field	Description
7 PUPKE	**Port K Pull-up Enable**—Enable pull-up devices on all port input pins This bit configures whether a pull-up device is activated on all associated port input pins. If a pin is used as output this bit has no effect. 1 Pull-up device enabled 0 Pull-up device disabled
6 BKPUE	**BKGD pin pull-up Enable**—Enable pull-up device on pin This bit configures whether a pull-up device is activated, if the pin is used as input. If a pin is used as output this bit has no effect. 1 Pull-up device enabled 0 Pull-up device disabled
4 PUPEE	**Port E Pull-up Enable**—Enable pull-up devices on all port input pins except pins 5 and 6 This bit configures whether a pull-up device is activated on all associated port input pins. If a pin is used as output this bit has no effect. Pins 5 and 6 have pull-down devices enabled only during reset. This bit has no effect on these pins. 1 Pull-up device enabled 0 Pull-up device disabled

Table 2-10. PUCR Register Field Descriptions (continued)

Field	Description
1 PUPBE	**Port B Pull-up Enable**—Enable pull-up devices on all port input pins This bit configures whether a pull-up device is activated on all associated port input pins. If a pin is used as output this bit has no effect. 1 Pull-up device enabled 0 Pull-up device disabled
0 PUPAE	**Port A Pull-up Enable**—Enable pull-up devices on all port input pins This bit configures whether a pull-up device is activated on all associated port input pins. If a pin is used as output this bit has no effect. 1 Pull-up device enabled 0 Pull-up device disabled

2.3.11 Ports ABEK Reduced Drive Register (RDRIV)

Address 0x000D (PRR) Access: User read/write[1]

	7	6	5	4	3	2	1	0
R	RDPK	0	0	RDPE	0	0	RDPB	RDPA
W								
Reset	0	0	0	0	0	0	0	0

= Unimplemented or Reserved

Figure 2-9. Ports ABEK Reduced Drive Register (RDRIV)

[1] Read: Anytime, the data source depends on the data direction value
Write: Anytime

This register is used to select reduced drive for the pins associated with ports A, B, E, and K. If enabled, the pins drive at approx. 1/5 of the full drive strength.

Table 2-11. RDRIV Register Field Descriptions

Field	Description
7 RDPK	**Port K reduced drive**—Select reduced drive for output port This bit configures the drive strength of all associated port output pins as either full or reduced. If a pin is used as input this bit has no effect. The reduced drive function is independent of which function is being used on a particular pin. 1 Reduced drive selected (approx. 1/5 of the full drive strength) 0 Full drive strength enabled
4 RDPE	**Port E reduced drive**—Select reduced drive for output port This bit configures the drive strength of all associated port output pins as either full or reduced. If a pin is used as input this bit has no effect. The reduced drive function is independent of which function is being used on a particular pin. 1 Reduced drive selected (approx. 1/5 of the full drive strength) 0 Full drive strength enabled

Table 2-11. RDRIV Register Field Descriptions (continued)

Field	Description
1 RDPB	**Port B reduced drive**—Select reduced drive for output port This bit configures the drive strength of all associated port output pins as either full or reduced. If a pin is used as input this bit has no effect. The reduced drive function is independent of which function is being used on a particular pin. 1 Reduced drive selected (approx. 1/5 of the full drive strength) 0 Full drive strength enabled
0 RDPA	**Port A reduced drive**—Select reduced drive for output port This bit configures the drive strength of all associated port output pins as either full or reduced. If a pin is used as input this bit has no effect. The reduced drive function is independent of which function is being used on a particular pin. 1 Reduced drive selected (approx. 1/5 of the full drive strength) 0 Full drive strength enabled

2.3.12 ECLK Control Register (ECLKCTL)

Address 0x001C (PRR) Access: User read/write[1]

	7	6	5	4	3	2	1	0
R W	NECLK	NCLKX2	DIV16	EDIV4	EDIV3	EDIV2	EDIV1	EDIV0
Reset:	Mode Depen-dent	1	0	0	0	0	0	0
Special single-chip	0	1	0	0	0	0	0	0
Normal single-chip	1	1	0	0	0	0	0	0

= Unimplemented or Reserved

Figure 2-10. ECLK Control Register (ECLKCTL)

[1] Read: Anytime
Write: Anytime

Table 2-12. ECLKCTL Register Field Descriptions

Field	Description
7 NECLK	**No ECLK**—Disable ECLK output This bit controls the availability of a free-running clock on the ECLK pin. This clock has a fixed rate equivalent to the internal bus clock. 1 ECLK disabled 0 ECLK enabled
6 NCLKX2	**No ECLKX2**—Disable ECLKX2 output This bit controls the availability of a free-running clock on the ECLKX2 pin. This clock has a fixed rate of twice the internal bus clock. 1 ECLKX2 disabled 0 ECLKX2 enabled
5 DIV16	**Free-running ECLK predivider**—Divide by 16 This bit enables a divide-by-16 stage on the selected EDIV rate. 1 Divider enabled: ECLK rate = EDIV rate divided by 16 0 Divider disabled: ECLK rate = EDIV rate
4-0 EDIV	**Free-running ECLK Divider**—Configure ECLK rate These bits determine the rate of the free-running clock on the ECLK pin. 00000 ECLK rate = bus clock rate 00001 ECLK rate = bus clock rate divided by 2 00010 ECLK rate = bus clock rate divided by 3 ... 11111 ECLK rate = bus clock rate divided by 32

2.3.13 PIM Reserved Register

Address 0x001D (PRR) Access: User read[1]

	7	6	5	4	3	2	1	0
R	0	0	0	0	0	0	0	0
W								
Reset	0	0	0	0	0	0	0	0

= Unimplemented or Reserved

Figure 2-11. PIM Reserved Register

[1] Read: Always reads 0x00
Write: Unimplemented

2.3.14 IRQ Control Register (IRQCR)

Address 0x001E — Access: User read/write[1]

	7	6	5	4	3	2	1	0
R	IRQE	IRQEN	0	0	0	0	0	0
W								
Reset	0	1	0	0	0	0	0	0

= Unimplemented or Reserved

Figure 2-12. IRQ Control Register (IRQCR)

[1] Read: See individual bit descriptions below
Write: See individual bit descriptions below

Table 2-13. IRQCR Register Field Descriptions

Field	Description
7 IRQE	**IRQ select edge sensitive only**— Special mode: Read or write anytime Normal mode: Read anytime, write once 1 $\overline{IRQ}$ configured to respond only to falling edges. Falling edges on the $\overline{IRQ}$ pin will be detected anytime IRQE=1 and will be cleared only upon a reset or the servicing of the $\overline{IRQ}$ interrupt. 0 $\overline{IRQ}$ configured for low level recognition.
6 IRQEN	**IRQ enable**— Read or write anytime 1 $\overline{IRQ}$ pin is connected to interrupt logic. 0 $\overline{IRQ}$ pin is disconnected from interrupt logic.

2.3.15 PIM Reserved Register PIMTEST[1]

This register is reserved for factory testing of the PIM module and is not available in normal operation. Writing to this register when in special modes can alter the pin functionality.

Address 0x001F — Access: User read[1]

	7	6	5	4	3	2	1	0
R	0	0	0	0	0	0	0	0
W								
Reset	0	0	0	0	0	0	0	0

= Unimplemented or Reserved

Figure 2-13. PIM Reserved Register

1. Implementation pim_xe.01.01 and later

[1] Read: Always reads 0x00
Write: Unimplemented

2.3.16 Port K Data Register (PORTK)

Address 0x0032 (PRR) Access: User read/write[1]

	7	6	5	4	3	2	1	0
R	PK7	0	PK5	PK4	PK3	PK2	PK1	PK0
W								
Reset	0	0	0	0	0	0	0	0

Figure 2-14. Port K Data Register (PORTK)

[1] Read: Anytime, the data source depends on the data direction value
Write: Anytime

Table 2-14. PORTK Register Field Descriptions

Field	Description
7,5-0 PK	**Port K general purpose input/output data**—Data Register The associated pin can be used as general purpose I/O. In general purpose output mode the register bit value is driven to the pin. If the associated data direction bit is set to 1, a read returns the value of the port register bit, otherwise the buffered pin input state is read.

2.3.17 Port K Data Direction Register (DDRK)

Address 0x0033 (PRR) Access: User read/write[1]

	7	6	5	4	3	2	1	0
R	DDRK7	0	DDRK5	DDRK4	DDRK3	DDRK2	DDRK1	DDRK0
W								
Reset	0	0	0	0	0	0	0	0

Figure 2-15. Port K Data Direction Register (DDRK)

[1] Read: Anytime, the data source depends on the data direction value
Write: Anytime

Table 2-15. DDRK Register Field Descriptions

Field	Description
7,5-0 DDRK	**Port K Data Direction**— This bit determines whether the associated pin is an input or output. 1 Associated pin configured as output 0 Associated pin configured as input

2.3.18 Port T Data Register (PTT)

Address 0x0240 Access: User read/write[1]

	7	6	5	4	3	2	1	0
R W	PTT7	PTT6	PTT5	PTT4	PTT3	PTT2	PTT1	PTT0
Altern. Function	IOC7	IOC6	IOC5	IOC4	IOC3	IOC2	IOC1	IOC0
	(PWM7)	(PWM6)	(PWM5)	(PWM4)	—	—	—	—
	—	—	VREG_API	—	—	—	—	—
Reset	0	0	0	0	0	0	0	0

Figure 2-16. Port T Data Register (PTT)

[1] Read: Anytime, the data source depends on the data direction value
Write: Anytime

Table 2-16. PTT Register Field Descriptions

Field	Description
7-6, 4 PTT	**Port T general purpose input/output data**—Data Register, TIM output, routed PWM output When not used with the alternative function, the associated pin can be used as general purpose I/O. In general purpose output mode the register bit value is driven to the pin. If the associated data direction bit is set to 1, a read returns the value of the port register bit, otherwise the buffered pin input state is read. • The TIM output function takes precedence over the routed PWM and the general purpose I/O function if the related channel is enabled. • The routed PWM function takes precedence over the general purpose I/O function if the related channel is enabled.

Table 2-16. PTT Register Field Descriptions (continued)

Field	Description
5 PTT	**Port T general purpose input/output data**—Data Register, TIM output, routed PWM output, VREG_API output When not used with the alternative function, the associated pin can be used as general purpose I/O. In general purpose output mode the register bit value is driven to the pin. If the associated data direction bit is set to 1, a read returns the value of the port register bit, otherwise the buffered pin input state is read. • The TIM output function takes precedence over the routed PWM, VREG_API function and the general purpose I/O function if the related channel is enabled. • The routed PWM function takes precedence over VREG_API and the general purpose I/O function if the related channel is enabled. • The VREG_API takes precedence over the general purpose I/O function if enabled.
3-0 PTT	**Port T general purpose input/output data**—Data Register, TIM output When not used with the alternative function, the associated pin can be used as general purpose I/O. In general purpose output mode the register bit value is driven to the pin. If the associated data direction bit is set to 1, a read returns the value of the port register bit, otherwise the buffered pin input state is read. • The TIM output function takes precedence over the general purpose I/O function if the related channel is enabled.

2.3.19 Port T Input Register (PTIT)

Address 0x0241 Access: User read[1]

	7	6	5	4	3	2	1	0
R	PTIT7	PTIT6	PTIT5	PTIT4	PTIT3	PTIT2	PTIT1	PTIT0
W								
Reset	u	u	u	u	u	u	u	u

= Unimplemented or Reserved u = Unaffected by reset

Figure 2-17. Port T Input Register (PTIT)

[1] Read: Anytime
Write:Never, writes to this register have no effect

Table 2-17. PTIT Register Field Descriptions

Field	Description
7-0 PTIT	**Port T input data**— A read always returns the buffered input state of the associated pin. It can be used to detect overload or short circuit conditions on output pins.

2.3.20 Port T Data Direction Register (DDRT)

Address 0x0242 Access: User read/write[1]

	7	6	5	4	3	2	1	0
R/W	DDRT7	DDRT6	DDRT5	DDRT4	DDRT3	DDRT2	DDRT1	DDRT0
Reset	0	0	0	0	0	0	0	0

Figure 2-18. Port T Data Direction Register (DDRT)

[1] Read: Anytime
Write: Anytime

Table 2-18. DDRT Register Field Descriptions

Field	Description
7-6, 4 DDRT	**Port T data direction**— This bit determines whether the pin is an input or output. The TIM forces the I/O state to be an output for a timer port associated with an enabled output compare. Else the routed PWM forces the I/O state to be an output for an enabled channel. In these cases the data direction bit will not change. 1 Associated pin configured as output 0 Associated pin configured as input
5 DDRT	**Port T data direction**— This bit determines whether the pin is an input or output. The TIM forces the I/O state to be an output for a timer port associated with an enabled output compare. Else the routed PWM forces the I/O state to be an output for an enabled channel. Else the VREG_API forces the I/O state to be an output if enabled. In these cases the data direction bit will not change. 1 Associated pin configured as output 0 Associated pin configured as input
3-0 DDRT	**Port T data direction**— This bit determines whether the pin is an input or output. The TIM forces the I/O state to be an output for a timer port associated with an enabled output compare. In this case the data direction bit will not change. 1 Associated pin configured as output 0 Associated pin configured as input

2.3.21 Port T Reduced Drive Register (RDRT)

Address 0x0243 Access: User read/write[1]

	7	6	5	4	3	2	1	0
R/W	RDRT7	RDRT6	RDRT5	RDRT4	RDRT3	RDRT2	RDRT1	RDRT0
Reset	0	0	0	0	0	0	0	0

Figure 2-19. Port T Reduced Drive Register (RDRT)

[1] Read: Anytime
Write: Anytime

Table 2-19. RDRT Register Field Descriptions

Field	Description
7-0 RDRT	**Port T reduced drive**—Select reduced drive for output pin This bit configures the drive strength of the associated output pin as either full or reduced. If a pin is used as input this bit has no effect. The reduced drive function is independent of which function is being used on a particular pin. 1 Reduced drive selected (approx. 1/5 of the full drive strength) 0 Full drive strength enabled

2.3.22 Port T Pull Device Enable Register (PERT)

Address 0x0244 Access: User read/write[1]

	7	6	5	4	3	2	1	0
R W	PERT7	PERT6	PERT5	PERT4	PERT3	PERT2	PERT1	PERT0
Reset	0	0	0	0	0	0	0	0

Figure 2-20. Port T Pull Device Enable Register (PERT)

[1] Read: Anytime
Write: Anytime

Table 2-20. PERT Register Field Descriptions

Field	Description
7-0 PERT	**Port T pull device enable**—Enable pull device on input pin This bit controls whether a pull device on the associated port input pin is active. If a pin is used as output this bit has no effect. The polarity is selected by the related polarity select register bit. 1 Pull device enabled 0 Pull device disabled

2.3.23 Port T Polarity Select Register (PPST)

Address 0x0245 Access: User read/write[1]

	7	6	5	4	3	2	1	0
R W	PPST7	PPST6	PPST5	PPST4	PPST3	PPST2	PPST1	PPST0
Reset	0	0	0	0	0	0	0	0

Figure 2-21. Port T Polarity Select Register (PPST)

[1] Read: Anytime
Write: Anytime

Table 2-21. PPST Register Field Descriptions

Field	Description
7-0 PPST	**Port T pull device select**—Configure pull device polarity on input pin This bit selects a pull-up or a pull-down device if enabled on the associated port input pin. 1 A pull-down device selected 0 A pull-up device selected

2.3.24 PIM Reserved Register

Address 0x0246 Access: User read[1]

	7	6	5	4	3	2	1	0
R	0	0	0	0	0	0	0	0
W								
Reset	0	0	0	0	0	0	0	0

= Unimplemented or Reserved

Figure 2-22. PIM Reserved Register

[1] Read: Always reads 0x00
Write: Unimplemented

2.3.25 Port T Routing Register (PTTRR)

Address 0x0247 Access: User read[1]

	7	6	5	4	3	2	1	0
R	PTTRR7	PTTRR6	PTTRR5	PTTRR4	0	PTTRR2	PTTRR1	PTTRR0
W								
Routing Option	PWM7	PWM6	PWM5	PWM4	—	IOC2	IOC1	IOC0
Reset	0	0	0	0	0	0	0	0

= Unimplemented or Reserved

Figure 2-23. Port T Routing Register (PTTRR)

[1] Read: Anytime
Write: Anytime

This register configures the re-routing of PWM and TIM channels on alternative pins.

Table 2-22. PTTRR Register Field Descriptions

Field	Description
7 PTTRR	**Port T peripheral routing**— This register controls the routing of PWM channel 7. 1 PWM7 routed to PT7 0 PWM7 routed to PP7
6 PTTRR	**Port T peripheral routing**— This register controls the routing of PWM channel 6. 1 PWM6 routed to PT6 0 PWM6 routed to PP6
5 PTTRR	**Port T peripheral routing**— This register controls the routing of PWM channel 5. 1 PWM5 routed to PT5 0 PWM5 routed to PP5
4 PTTRR	**Port T peripheral routing**— This register controls the routing of PWM channel 4. 1 PWM4 routed to PT4 0 PWM4 routed to PP4
2 PTTRR	**Port T peripheral routing**— This register controls the routing of TIM channel 2. 1 IOC2 routed to PP2 0 IOC2 routed to PT2
1 PTTRR	**Port T peripheral routing**— This register controls the routing of TIM channel 1. 1 IOC1 routed to PP1 0 IOC1 routed to PT1
0 PTTRR	**Port T peripheral routing**— This register controls the routing of TIM channel 0. 1 IOC0 routed to PP0 0 IOC0 routed to PT0

2.3.26 Port S Data Register (PTS)

Address 0x0248 Access: User read/write[1]

	7	6	5	4	3	2	1	0
R W	PTS7	PTS6	PTS5	PTS4	PTS3	PTS2	PTS1	PTS0
Altern. Function	$\overline{SS0}$	SCK0	MOSI0	MISO0	TXD1	RXD1	TXD0	RXD0
Reset	0	0	0	0	0	0	0	0

Figure 2-24. Port S Data Register (PTS)

[1] Read: Anytime, the data source depends on the data direction value
Write: Anytime

Table 2-23. PTS Register Field Descriptions

Field	Description
7 PTS	**Port S general purpose input/output data**—Data Register, SPI0 $\overline{SS}$ input/output When not used with the alternative function, the associated pin can be used as general purpose I/O. In general purpose output mode the register bit value is driven to the pin. If the associated data direction bit is set to 1, a read returns the value of the port register bit, otherwise the buffered pin input state is read. • The SPI0 function takes precedence over the general purpose I/O function if enabled.
6 PTS	**Port S general purpose input/output data**—Data Register, SPI0 SCK input/output When not used with the alternative function, the associated pin can be used as general purpose I/O. In general purpose output mode the register bit value is driven to the pin. If the associated data direction bit is set to 1, a read returns the value of the port register bit, otherwise the buffered pin input state is read. • The SPI0 function takes precedence over the general purpose I/O function if enabled.
5 PTS	**Port S general purpose input/output data**—Data Register, SPI0 MOSI input/output When not used with the alternative function, the associated pin can be used as general purpose I/O. In general purpose output mode the register bit value is driven to the pin. If the associated data direction bit is set to 1, a read returns the value of the port register bit, otherwise the buffered pin input state is read. • The SPI0 function takes precedence over the general purpose I/O function if enabled.
4 PTS	**Port S general purpose input/output data**—Data Register, SPI0 MISO input/output When not used with the alternative function, the associated pin can be used as general purpose I/O. In general purpose output mode the register bit value is driven to the pin. If the associated data direction bit is set to 1, a read returns the value of the port register bit, otherwise the buffered pin input state is read. • The SPI0 function takes precedence over the general purpose I/O function if enabled.

Table 2-23. PTS Register Field Descriptions (continued)

Field	Description
3 PTS	**Port S general purpose input/output data**—Data Register, SCI1 TXD output When not used with the alternative function, the associated pin can be used as general purpose I/O. In general purpose output mode the register bit value is driven to the pin. If the associated data direction bit is set to 1, a read returns the value of the port register bit, otherwise the buffered pin input state is read. • The SCI1 function takes precedence over the general purpose I/O function if enabled.
2 PTS	**Port S general purpose input/output data**—Data Register, SCI1 RXD input When not used with the alternative function, the associated pin can be used as general purpose I/O. In general purpose output mode the register bit value is driven to the pin. If the associated data direction bit is set to 1, a read returns the value of the port register bit, otherwise the buffered pin input state is read. • The SCI1 function takes precedence over the general purpose I/O function if enabled.
1 PTS	**Port S general purpose input/output data**—Data Register, SCI0 TXD output When not used with the alternative function, the associated pin can be used as general purpose I/O. In general purpose output mode the register bit value is driven to the pin. If the associated data direction bit is set to 1, a read returns the value of the port register bit, otherwise the buffered pin input state is read. • The SCI0 function takes precedence over the general purpose I/O function if enabled.
0 PTS	**Port S general purpose input/output data**—Data Register, SCI0 RXD input When not used with the alternative function, the associated pin can be used as general purpose I/O. In general purpose output mode the register bit value is driven to the pin. If the associated data direction bit is set to 1, a read returns the value of the port register bit, otherwise the buffered pin input state is read. • The SCI0 function takes precedence over the general purpose I/O function if enabled.

2.3.27 Port S Input Register (PTIS)

Address 0x0249 Access: User read[1]

	7	6	5	4	3	2	1	0
R	PTIS7	PTIS6	PTIS5	PTIS4	PTIS3	PTIS2	PTIS1	PTIS0
W								
Reset	u	u	u	u	u	u	u	u

= Unimplemented or Reserved u = Unaffected by reset

Figure 2-25. Port S Input Register (PTIS)

[1] Read: Anytime
Write:Never, writes to this register have no effect

Table 2-24. PTIS Register Field Descriptions

Field	Description
7-0 PTIS	**Port S input data**— A read always returns the buffered input state of the associated pin. It can be used to detect overload or short circuit conditions on output pins.

2.3.28 Port S Data Direction Register (DDRS)

Address 0x0249 Access: User read/write[1]

	7	6	5	4	3	2	1	0
R W	DDRS7	DDRS6	DDRS5	DDRS4	DDRS3	DDRS2	DDRS1	DDRS0
Reset	0	0	0	0	0	0	0	0

Figure 2-26. Port S Data Direction Register (DDRS)

[1] Read: Anytime
Write: Anytime

Table 2-25. DDRS Register Field Descriptions

Field	Description
7-4 DDRS	**Port S data direction**— This bit determines whether the associated pin is an input or output. Depending on the configuration of the enabled SPI0 the I/O state will be forced to be input or output. In this case the data direction bit will not change. 1 Associated pin configured as output 0 Associated pin configured as input
3-2 DDRS	**Port S data direction**— This bit determines whether the associated pin is an input or output. Depending on the configuration of the enabled SCI1 the I/O state will be forced to be input or output. In this case the data direction bit will not change. 1 Associated pin configured as output 0 Associated pin configured as input
1-0 DDRS	**Port S data direction**— This bit determines whether the associated pin is an input or output. Depending on the configuration of the enabled SCI0 the I/O state will be forced to be input or output. In this case the data direction bit will not change. 1 Associated pin configured as output 0 Associated pin configured as input

2.3.29 Port S Reduced Drive Register (RDRS)

Address 0x024A — Access: User read/write[1]

	7	6	5	4	3	2	1	0
R/W	RDRS7	RDRS6	RDRS5	RDRS4	RDRS3	RDRS2	RDRS1	RDRS0
Reset	0	0	0	0	0	0	0	0

Figure 2-27. Port S Reduced Drive Register (RDRS)

[1] Read: Anytime
Write: Anytime

Table 2-26. RDRS Register Field Descriptions

Field	Description
7-0 RDRS	**Port S reduced drive**—Select reduced drive for output pin This bit configures the drive strength of the associated output pin as either full or reduced. If a pin is used as input this bit has no effect. The reduced drive function is independent of which function is being used on a particular pin. 1 Reduced drive selected (approx. 1/5 of the full drive strength) 0 Full drive strength enabled

2.3.30 Port S Pull Device Enable Register (PERS)

Address 0x024B — Access: User read/write[1]

	7	6	5	4	3	2	1	0
R/W	PERS7	PERS6	PERS5	PERS4	PERS3	PERS2	PERS1	PERS0
Reset	1	1	1	1	1	1	1	1

Figure 2-28. Port S Pull Device Enable Register (PERS)

[1] Read: Anytime
Write: Anytime

Table 2-27. PERS Register Field Descriptions

Field	Description
7-0 PERS	**Port S pull device enable**—Enable pull device on input pin or wired-or output pin This bit controls whether a pull device on the associated port input pin is active. If a pin is used as output this bit has only effect if used in wired-or mode. The polarity is selected by the related polarity select register bit. 1 Pull device enabled 0 Pull device disabled

2.3.31 Port S Polarity Select Register (PPSS)

Address 0x024C — Access: User read/write[1]

	7	6	5	4	3	2	1	0
R/W	PPSS7	PPSS6	PPSS5	PPSS4	PPSS3	PPSS2	PPSS1	PPSS0
Reset	0	0	0	0	0	0	0	0

Figure 2-29. Port S Polarity Select Register (PPSS)

[1] Read: Anytime
Write: Anytime

Table 2-28. PPSS Register Field Descriptions

Field	Description
7-0 PPSS	**Port S pull device select**—Configure pull device polarity on input pin This bit selects a pull-up or a pull-down device if enabled on the associated port input pin. 1 A pull-down device selected 0 A pull-up device selected

2.3.32 Port S Wired-Or Mode Register (WOMS)

Address 0x024C — Access: User read/write[1]

	7	6	5	4	3	2	1	0
R/W	WOMS7	WOMS6	WOMS5	WOMS4	WOMS3	WOMS2	WOMS1	WOMS0
Reset	0	0	0	0	0	0	0	0

Figure 2-30. Port S Wired-Or Mode Register (WOMS)

[1] Read: Anytime
Write: Anytime

Table 2-29. WOMS Register Field Descriptions

Field	Description
7-0 WOMS	**Port S wired-or mode**—Enable open-drain functionality on output pin This bit configures an output pin as wired-or (open-drain) or push-pull independent of the function used on the pins. In wired-or mode a logic “0” is driven active low while a logic “1” remains undriven. This allows a multipoint connection of several serial modules. The bit has no influence on pins used as input. 1 Output buffer operates as open-drain output. 0 Output buffer operates as push-pull output.

2.3.33 PIM Reserved Register

Address 0x024F — Access: User read[1]

	7	6	5	4	3	2	1	0
R	0	0	0	0	0	0	0	0
W								
Reset	0	0	0	0	0	0	0	0

= Unimplemented or Reserved u = Unaffected by reset

Figure 2-31. PIM Reserved Register

[1] Read: Always reads 0x00
Write: Unimplemented

2.3.34 Port M Data Register (PTM)

Address 0x0250 — Access: User read/write[1]

	7	6	5	4	3	2	1	0
R W	PTM7	PTM6	PTM5	PTM4	PTM3	PTM2	PTM1	PTM0
Altern. Function	—	—	(SCK0)	(MOSI0)	($\overline{SS0}$)	(MISO0)	TXCAN0	RXCAN0
	—	—	—	—	—	—	(TXD1)	(RXD1)
Reset	0	0	0	0	0	0	0	0

Figure 2-32. Port M Data Register (PTM)

[1] Read: Anytime, the data source depends on the data direction value
Write: Anytime

Table 2-30. PTM Register Field Descriptions

Field	Description
7-6 PTM	**Port M general purpose input/output data**—Data Register When not used with the alternative function, the associated pin can be used as general purpose I/O. In general purpose output mode the register bit value is driven to the pin. If the associated data direction bit is set to 1, a read returns the value of the port register bit, otherwise the buffered pin input state is read.
5 PTM	**Port M general purpose input/output data**—Data Register, routed SPI0 SCK input/output When not used with the alternative function, the associated pin can be used as general purpose I/O. In general purpose output mode the register bit value is driven to the pin. If the associated data direction bit is set to 1, a read returns the value of the port register bit, otherwise the buffered pin input state is read. • The SPI0 function takes precedence over the general purpose I/O function if enabled.

Table 2-30. PTM Register Field Descriptions (continued)

Field	Description
4 PTM	**Port M general purpose input/output data**—Data Register, routed SPI0 MOSI input/output When not used with the alternative function, the associated pin can be used as general purpose I/O. In general purpose output mode the register bit value is driven to the pin. If the associated data direction bit is set to 1, a read returns the value of the port register bit, otherwise the buffered pin input state is read. • The SPI0 function takes precedence over the general purpose I/O function if enabled.
3 PTM	**Port M general purpose input/output data**—Data Register, routed SPI0 $\overline{SS}$ input/output When not used with the alternative function, the associated pin can be used as general purpose I/O. In general purpose output mode the register bit value is driven to the pin. If the associated data direction bit is set to 1, a read returns the value of the port register bit, otherwise the buffered pin input state is read. • The SPI0 function takes precedence over the general purpose I/O function if enabled.
2 PTM	**Port M general purpose input/output data**—Data Register, routed SPI0 MISO input/output When not used with the alternative function, the associated pin can be used as general purpose I/O. In general purpose output mode the register bit value is driven to the pin. If the associated data direction bit is set to 1, a read returns the value of the port register bit, otherwise the buffered pin input state is read. • The SPI0 function takes precedence over the general purpose I/O function if enabled.
1 PTM	**Port M general purpose input/output data**—Data Register, CAN0 TXCAN output, SCI1 TXD output When not used with the alternative function, the associated pin can be used as general purpose I/O. In general purpose output mode the register bit value is driven to the pin. If the associated data direction bit is set to 1, a read returns the value of the port register bit, otherwise the buffered pin input state is read. • The CAN0 function takes precedence over the general purpose I/O function if enabled. • The SCI1 function takes precedence over the general purpose I/O function if enabled.
0 PTM	**Port M general purpose input/output data**—Data Register, CAN0 RXCAN input, SCI1 RXD input When not used with the alternative function, the associated pin can be used as general purpose I/O. In general purpose output mode the register bit value is driven to the pin. If the associated data direction bit is set to 1, a read returns the value of the port register bit, otherwise the buffered pin input state is read. • The CAN0 function takes precedence over the general purpose I/O function if enabled. • The SCI1 function takes precedence over the general purpose I/O function if enabled.

2.3.35 Port M Input Register (PTIM)

Address 0x0251 Access: User read[1]

	7	6	5	4	3	2	1	0
R	PTIM7	PTIM6	PTIM5	PTIM4	PTIM3	PTIM2	PTIM1	PTIM0
W								
Reset	u	u	u	u	u	u	u	u

= Unimplemented or Reserved u = Unaffected by reset

Figure 2-33. Port M Input Register (PTIM)

[1] Read: Anytime
Write:Never, writes to this register have no effect

Table 2-31. PTIM Register Field Descriptions

Field	Description
7-0 PTIM	**Port M input data**— A read always returns the buffered input state of the associated pin. It can be used to detect overload or short circuit conditions on output pins.

2.3.36 Port M Data Direction Register (DDRM)

Address 0x0252 Access: User read/write[1]

	7	6	5	4	3	2	1	0
R W	DDRM7	DDRM6	DDRM5	DDRM4	DDRM3	DDRM2	DDRM1	DDRM0
Reset	0	0	0	0	0	0	0	0

Figure 2-34. Port M Data Direction Register (DDRM)

[1] Read: Anytime
Write: Anytime

Table 2-32. DDRM Register Field Descriptions

Field	Description
7-6 DDRM	**Port M data direction**— This bit determines whether the associated pin is an input or output. 1 Associated pin configured as output 0 Associated pin configured as input
5-2 DDRM	**Port M data direction**— This bit determines whether the associated pin is an input or output. Depending on the configuration of the enabled SPI0 the I/O state will be forced to be input or output. In this case the data direction bit will not change. 1 Associated pin configured as output 0 Associated pin configured as input
1 DDRM	**Port M data direction**— This bit determines whether the associated pin is an input or output. The enabled CAN0 or SCI1 forces the I/O state to be an output. In this case the data direction bit will not change. 1 Associated pin configured as output 0 Associated pin configured as input
0 DDRM	**Port M data direction**— This bit determines whether the associated pin is an input or output. The enabled CAN0 or SCI1 forces the I/O state to be an input. In this case the data direction bit will not change. 1 Associated pin configured as output 0 Associated pin configured as input

2.3.37 Port M Reduced Drive Register (RDRM)

Address 0x0253 Access: User read/write[1]

	7	6	5	4	3	2	1	0
R W	RDRM7	RDRM6	RDRM5	RDRM4	RDRM3	RDRM2	RDRM1	RDRM0
Reset	0	0	0	0	0	0	0	0

Figure 2-35. Port M Reduced Drive Register (RDRM)

[1] Read: Anytime
Write: Anytime

Table 2-33. RDRM Register Field Descriptions

Field	Description
7-0 RDRM	**Port M reduced drive**—Select reduced drive for output pin This bit configures the drive strength of the associated output pin as either full or reduced. If a pin is used as input this bit has no effect. The reduced drive function is independent of which function is being used on a particular pin. 1 Reduced drive selected (approx. 1/5 of the full drive strength) 0 Full drive strength enabled

2.3.38 Port M Pull Device Enable Register (PERM)

Address 0x0254 Access: User read/write[1]

	7	6	5	4	3	2	1	0
R/W	PERM7	PERM6	PERM5	PERM4	PERM3	PERM2	PERM1	PERM0
Reset	0	0	0	0	0	0	0	0

Figure 2-36. Port M Pull Device Enable Register (PERM)

[1] Read: Anytime
Write: Anytime

Table 2-34. PERM Register Field Descriptions

Field	Description
7-0 PERM	**Port M pull device enable**—Enable pull device on input pin or wired-or output pin This bit controls whether a pull device on the associated port input pin is active. If a pin is used as output this bit has only effect if used in wired-or mode. The polarity is selected by the related polarity select register bit. 1 Pull device enabled 0 Pull device disabled

2.3.39 Port M Polarity Select Register (PPSM)

Address 0x0255 Access: User read/write[1]

	7	6	5	4	3	2	1	0
R/W	PPSM7	PPSM6	PPSM5	PPSM4	PPSM3	PPSM2	PPSM1	PPSM0
Reset	0	0	0	0	0	0	0	0

Figure 2-37. Port M Polarity Select Register (PPSM)

[1] Read: Anytime
Write: Anytime

Table 2-35. PPSM Register Field Descriptions

Field	Description
7-0 PPSM	**Port M pull device select**—Configure pull device polarity on input pin This bit selects a pull-up or a pull-down device if enabled on the associated port input pin. If CAN0 is active the selection of a pull-down device on the RXCAN input will have no effect. 1 A pull-down device selected 0 A pull-up device selected

2.3.40 Port M Wired-Or Mode Register (WOMM)

Address 0x0256 Access: User read/write[1]

	7	6	5	4	3	2	1	0
R/W	WOMM7	WOMM6	WOMM5	WOMM4	WOMM3	WOMM2	WOMM1	WOMM0
Reset	0	0	0	0	0	0	0	0

Figure 2-38. Port M Wired-Or Mode Register (WOMM)

[1] Read: Anytime
Write: Anytime

Table 2-36. WOMM Register Field Descriptions

Field	Description
7-0 WOMM	**Port M wired-or mode**—Enable open-drain functionality on output pin This bit configures an output pin as wired-or (open-drain) or push-pull independent of the function used on the pins. In wired-or mode a logic “0” is driven active low while a logic “1” remains undriven. This allows a multipoint connection of several serial modules. The bit has no influence on pins used as input. 1 Output buffer operates as open-drain output. 0 Output buffer operates as push-pull output.

2.3.41 Module Routing Register (MODRR)

Address 0x0257 Access: User read/write[1]

	7	6	5	4	3	2	1	0
R	MODRR7	MODRR6	0	MODRR4	0	0	0	0
W								
Routing Option	SCI1	SCI1	—	SPI0	—	—	—	—
Reset	0	0	0	0	0	0	0	0

= Unimplemented or Reserved

Figure 2-39. Module Routing Register (MODRR)

[1] Read: Anytime
Write: Anytime

This register configures the re-routing of SCI1 and SPI0 on alternative ports.

Table 2-37. SCI1 Routing

MODRRx		Related Pins	
7	6	TXD	RXD

Table 2-37. SCI1 Routing

MODRRx		Related Pins	
0	0	PS3	PS2
0	1	PP2	PP0
1	0	PM1	PM0
1	1	Reserved[1]	Reserved[1]

[1] Defaults to reset value

Table 2-38. SPI0 Routing

MODRRx	Related Pins			
4	**MISO0**	**MOSI0**	**SCK0**	**$\overline{SS0}$**
0	PS4	PS5	PS6	PS7
1	PM2	PM4	PM5	PM3

2.3.42 Port P Data Register (PTP)

Address 0x0258 Access: User read/write[1]

	7	6	5	4	3	2	1	0
R/W	PTP7	PTP6	PTP5	PTP4	PTP3	PTP2	PTP1	PTP0
Altern. Function	PWM7	PWM6	PWM5	PWM4	PWM3	PWM2	PWM1	PWM0
	—	—	—	—	—	(IOC2)	(IOC1)	(IOC0)
	—	—	—	—	—	(TXD1)	—	(RXD1)
Reset	0	0	0	0	0	0	0	0

Figure 2-40. Port P Data Register (PTP)

[1] Read: Anytime, the data source depends on the data direction value
Write: Anytime

Table 2-39. PTP Register Field Descriptions

Field	Description
7 PTP	**Port P general purpose input/output data**—Data Register, PWM input/output, pin interrupt input/output When not used with the alternative function, the associated pin can be used as general purpose I/O. In general purpose output mode the register bit value is driven to the pin. If the associated data direction bit is set to 1, a read returns the value of the port register bit, otherwise the buffered pin input state is read. • The PWM function takes precedence over the general purpose I/O function if the related channel or the emergency shut-down feature is enabled. • Pin interrupts can be generated if enabled in input or output mode.
6-3 PTP	**Port P general purpose input/output data**—Data Register, PWM output, pin interrupt input/output When not used with the alternative function, the associated pin can be used as general purpose I/O. In general purpose output mode the register bit value is driven to the pin. If the associated data direction bit is set to 1, a read returns the value of the port register bit, otherwise the buffered pin input state is read. • The PWM function takes precedence over the general purpose I/O function if the related channel is enabled. • Pin interrupts can be generated if enabled in input or output mode.
2 PTP	**Port P general purpose input/output data**—Data Register, PWM output, routed TIM output, routed SCI1 TXD output, pin interrupt input/output When not used with the alternative function, the associated pin can be used as general purpose I/O. In general purpose output mode the register bit value is driven to the pin. If the associated data direction bit is set to 1, a read returns the value of the port register bit, otherwise the buffered pin input state is read. • The PWM function takes precedence over the TIM, SCI1 and general purpose I/O function if the related channel is enabled. • The TIM function takes precedence over SCI1 and the general purpose I/O function if the related channel is enabled. • The SCI1 function takes precedence over the general purpose I/O function if enabled. • Pin interrupts can be generated if enabled in input or output mode.

Table 2-39. PTP Register Field Descriptions (continued)

Field	Description
1 PTP	**Port P general purpose input/output data**—Data Register, PWM output, routed TIM output, pin interrupt input/output When not used with the alternative function, the associated pin can be used as general purpose I/O. In general purpose output mode the register bit value is driven to the pin. If the associated data direction bit is set to 1, a read returns the value of the port register bit, otherwise the buffered pin input state is read. • The PWM function takes precedence over the TIM and general purpose I/O function if the related channel is enabled. • The TIM function takes precedence over the general purpose I/O function if the related channel is enabled. • Pin interrupts can be generated if enabled in input or output mode.
0 PTP	**Port P general purpose input/output data**—Data Register, PWM output, routed TIM output, routed SCI1 RXD output, pin interrupt input/output When not used with the alternative function, the associated pin can be used as general purpose I/O. In general purpose output mode the register bit value is driven to the pin. If the associated data direction bit is set to 1, a read returns the value of the port register bit, otherwise the buffered pin input state is read. • The PWM function takes precedence over the TIM, SCI1 and general purpose I/O function if the related channel is enabled. • The TIM function takes precedence over SCI1 and the general purpose I/O function if the related channel is enabled. • The SCI1 function takes precedence over the general purpose I/O function if enabled. • Pin interrupts can be generated if enabled in input or output mode.

2.3.43 Port P Input Register (PTIP)

Address 0x0259 Access: User read[1]

	7	6	5	4	3	2	1	0
R	PTIP7	PTIP6	PTIP5	PTIP4	PTIP3	PTIP2	PTIP1	PTIP0
W								
Reset	u	u	u	u	u	u	u	u

= Unimplemented or Reserved u = Unaffected by reset

Figure 2-41. Port P Input Register (PTIP)

[1] Read: Anytime
Write:Never, writes to this register have no effect

Table 2-40. PTIP Register Field Descriptions

Field	Description
7-0 PTIP	**Port P input data**— A read always returns the buffered input state of the associated pin. It can be used to detect overload or short circuit conditions on output pins.

2.3.44 Port P Data Direction Register (DDRP)

Address 0x025A Access: User read/write[1]

	7	6	5	4	3	2	1	0
R/W	DDRP7	DDRP6	DDRP5	DDRP4	DDRP3	DDRP2	DDRP1	DDRP0
Reset	0	0	0	0	0	0	0	0

Figure 2-42. Port P Data Direction Register (DDRP)

[1] Read: Anytime
Write: Anytime

Table 2-41. DDRP Register Field Descriptions

Field	Description
7 DDRP	**Port P data direction**— This bit determines whether the associated pin is an input or output. The PWM forces the I/O state to be an output for an enabled channel. If the PWM shutdown feature is enabled this pin is forced to be an input. In this case the data direction bit will not change. 1 Associated pin configured as output 0 Associated pin configured as input
6-3 DDRP	**Port P data direction**— This bit determines whether the associated pin is an input or output. The PWM forces the I/O state to be an output for an enabled channel. In this case the data direction bit will not change. 1 Associated pin configured as output 0 Associated pin configured as input
2,0 DDRP	**Port P data direction**— This bit determines whether the associated pin is an input or output. The PWM forces the I/O state to be an output for an enabled channel. Else the TIM forces the I/O state to be an output for a timer port associated with an enabled output compare. Else depending on the configuration of the enabled SCI the I/O state will be forced to be input or output. In this case the data direction bit will not change. 1 Associated pin configured as output 0 Associated pin configured as input
1 DDRP	**Port P data direction**— This bit determines whether the associated pin is an input or output. The PWM forces the I/O state to be an output for an enabled channel. Else the TIM forces the I/O state to be an output for a timer port associated with an enabled output compare. In this case the data direction bit will not change. 1 Associated pin configured as output 0 Associated pin configured as input

2.3.45 Port P Reduced Drive Register (RDRP)

Address 0x025B — Access: User read/write[1]

	7	6	5	4	3	2	1	0
R/W	RDRP7	RDRP6	RDRP5	RDRP4	RDRP3	RDRP2	RDRP1	RDRP0
Reset	0	0	0	0	0	0	0	0

Figure 2-43. Port P Reduced Drive Register (RDRP)

[1] Read: Anytime
Write: Anytime

Table 2-42. RDRP Register Field Descriptions

Field	Description
7-0 RDRP	**Port P reduced drive**—Select reduced drive for output pin This bit configures the drive strength of the associated output pin as either full or reduced. If a pin is used as input this bit has no effect. The reduced drive function is independent of which function is being used on a particular pin. 1 Reduced drive selected (approx. 1/5 of the full drive strength) 0 Full drive strength enabled

2.3.46 Port P Pull Device Enable Register (PERP)

Address 0x025C — Access: User read/write[1]

	7	6	5	4	3	2	1	0
R/W	PPSP7	PPSP6	PPSP5	PPSP4	PPSP3	PPSP2	PPSP1	PPSP0
Reset	0	0	0	0	0	0	0	0

Figure 2-44. Port P Pull Device Enable Register (PERP)

[1] Read: Anytime
Write: Anytime

Table 2-43. PERP Register Field Descriptions

Field	Description
7-0 PERP	**Port P pull device enable**—Enable pull device on input pin This bit controls whether a pull device on the associated port input pin is active. If a pin is used as output this bit has no effect. The polarity is selected by the related polarity select register bit. 1 Pull device enabled 0 Pull device disabled

2.3.47 Port P Polarity Select Register (PPSP)

Address 0x025D — Access: User read/write[1]

	7	6	5	4	3	2	1	0
R/W	PPSP7	PPSP6	PPSP5	PPSP4	PPSP3	PPSP2	PPSP1	PPSP0
Reset	0	0	0	0	0	0	0	0

Figure 2-45. Port P Polarity Select Register (PPSP)

[1] Read: Anytime
Write: Anytime

Table 2-44. PPSP Register Field Descriptions

Field	Description
7-0 PPSP	**Port P pull device select**—Configure pull device and pin interrupt edge polarity on input pin This bit selects a pull-up or a pull-down device if enabled on the associated port input pin. This bit also selects the polarity of the active pin interrupt edge. 1 A pull-down device selected; rising edge selected 0 A pull-up device selected; falling edge selected

2.3.48 Port P Interrupt Enable Register (PIEP)

Address 0x025E — Access: User read/write[1]

	7	6	5	4	3	2	1	0
R/W	PIEP7	PIEP6	PIEP5	PIEP4	PIEP3	PIEP2	PIEP1	PIEP0
Reset	0	0	0	0	0	0	0	0

Figure 2-46. Port P Interrupt Enable Register (PIEP)

[1] Read: Anytime
Write: Anytime

Table 2-45. PIEP Register Field Descriptions

Field	Description
7-0 PIEP	**Port P interrupt enable**— This bit enables or disables on the edge sensitive pin interrupt on the associated pin. 1 Interrupt enabled 0 Interrupt disabled (interrupt flag masked)

2.3.49 Port P Interrupt Flag Register (PIFP)

Address 0x025F — Access: User read/write[1]

	7	6	5	4	3	2	1	0
R/W	PIFP7	PIFP6	PIFP5	PIFP4	PIFP3	PIFP2	PIFP1	PIFP0
Reset	0	0	0	0	0	0	0	0

Figure 2-47. Port P Interrupt Flag Register (PIFP)

[1] Read: Anytime
Write: Anytime

Table 2-46. PIFP Register Field Descriptions

Field	Description
7-0 PIFP	**Port P interrupt flag**— The flag bit is set after an active edge was applied to the associated input pin. This can be a rising or a falling edge based on the state of the polarity select register. Writing a logic “1” to the corresponding bit field clears the flag. 1 Active edge on the associated bit has occurred (an interrupt will occur if the associated enable bit is set) 0 No active edge occurred

2.3.50 Port H Data Register (PTH)

Address 0x0260 — Access: User read/write[1]

	7	6	5	4	3	2	1	0
R/W	PTH7	PTH6	PTH5	PTH4	PTH3	PTH2	PTH1	PTH0
Reset	0	0	0	0	0	0	0	0

Figure 2-48. Port H Data Register (PTH)

[1] Read: Anytime, the data source depends on the data direction value
Write: Anytime

Table 2-47. PTH Register Field Descriptions

Field	Description
7-0 PTH	**Port H general purpose input/output data**—Data Register, pin interrupt input/output The associated pin can be used as general purpose I/O. In general purpose output mode the register bit value is driven to the pin. If the associated data direction bit is set to 1, a read returns the value of the port register bit, otherwise the buffered pin input state is read. • Pin interrupts can be generated if enabled in input or output mode.

2.3.51 Port H Input Register (PTIH)

Address 0x0261 Access: User read[1]

	7	6	5	4	3	2	1	0
R	PTIH7	PTIH6	PTIH5	PTIH4	PTIH3	PTIH2	PTIH1	PTIH0
W								
Reset	u	u	u	u	u	u	u	u

= Unimplemented or Reserved u = Unaffected by reset

Figure 2-49. Port H Input Register (PTIH)

[1] Read: Anytime
Write:Never, writes to this register have no effect

Table 2-48. PTIH Register Field Descriptions

Field	Description
7-0 PTIH	**Port H input data**— A read always returns the buffered input state of the associated pin. It can be used to detect overload or short circuit conditions on output pins.

2.3.52 Port H Data Direction Register (DDRH)

Address 0x0262 Access: User read/write[1]

	7	6	5	4	3	2	1	0
R W	DDRH7	DDRH6	DDRH5	DDRH4	DDRH3	DDRH2	DDRH1	DDRH0
Reset	0	0	0	0	0	0	0	0

Figure 2-50. Port H Data Direction Register (DDRH)

[1] Read: Anytime
Write: Anytime

Table 2-49. DDRH Register Field Descriptions

Field	Description
7-0 DDRH	**Port H data direction**— This bit determines whether the associated pin is an input or output. 1 Associated pin configured as output 0 Associated pin configured as input

2.3.53 Port H Reduced Drive Register (RDRH)

Address 0x0263 Access: User read/write[1]

	7	6	5	4	3	2	1	0
R/W	RDRH7	RDRH6	RDRH5	RDRH4	RDRH3	RDRH2	RDRH1	RDRH0
Reset	0	0	0	0	0	0	0	0

Figure 2-51. Port H Reduced Drive Register (RDRH)

[1] Read: Anytime
Write: Anytime

Table 2-50. RDRH Register Field Descriptions

Field	Description
7-0 RDRH	**Port H reduced drive**—Select reduced drive for output pin This bit configures the drive strength of the associated output pin as either full or reduced. If a pin is used as input this bit has no effect. The reduced drive function is independent of which function is being used on a particular pin. 1 Reduced drive selected (approx. 1/5 of the full drive strength) 0 Full drive strength enabled

2.3.54 Port H Pull Device Enable Register (PERH)

Address 0x0264 Access: User read/write[1]

	7	6	5	4	3	2	1	0
R/W	PERH7	PERH6	PERH5	PERH4	PERH3	PERH2	PERH1	PERH0
Reset	0	0	0	0	0	0	0	0

Figure 2-52. Port H Pull Device Enable Register (PERH)

[1] Read: Anytime
Write: Anytime

Table 2-51. PERH Register Field Descriptions

Field	Description
7-0 PERH	**Port H pull device enable**—Enable pull device on input pin This bit controls whether a pull device on the associated port input pin is active. If a pin is used as output this bit has no effect. The polarity is selected by the related polarity select register bit. 1 Pull device enabled 0 Pull device disabled

2.3.55 Port H Polarity Select Register (PPSH)

Address 0x0265 Access: User read/write[1]

	7	6	5	4	3	2	1	0
R/W	PPSH7	PPSH6	PPSH5	PPSH4	PPSH3	PPSH2	PPSH1	PPSH0
Reset	0	0	0	0	0	0	0	0

Figure 2-53. Port H Polarity Select Register (PPSH)

[1] Read: Anytime
Write: Anytime

Table 2-52. PPSH Register Field Descriptions

Field	Description
7-0 PPSH	**Port H pull device select**—Configure pull device and pin interrupt edge polarity on input pin This bit selects a pull-up or a pull-down device if enabled on the associated port input pin. This bit also selects the polarity of the active pin interrupt edge. 1 A pull-down device selected; rising edge selected 0 A pull-up device selected; falling edge selected

2.3.56 Port H Interrupt Enable Register (PIEH)

Address 0x0266 Access: User read/write[1]

	7	6	5	4	3	2	1	0
R/W	PIEH7	PIEH6	PIEH5	PIEH4	PIEH3	PIEH2	PIEH1	PIEH0
Reset	0	0	0	0	0	0	0	0

Figure 2-54. Port H Interrupt Enable Register (PIEH)

[1] Read: Anytime
Write: Anytime

Table 2-53. PIEH Register Field Descriptions

Field	Description
7-0 PIEH	**Port H interrupt enable**— This bit enables or disables on the edge sensitive pin interrupt on the associated pin. 1 Interrupt enabled 0 Interrupt disabled (interrupt flag masked)

2.3.57 Port H Interrupt Flag Register (PIFH)

Address 0x0267 Access: User read/write[1]

	7	6	5	4	3	2	1	0
R/W	PIFH7	PIFH6	PIFH5	PIFH4	PIFH3	PIFH2	PIFH1	PIFH0
Reset	0	0	0	0	0	0	0	0

Figure 2-55. Port H Interrupt Flag Register (PIFH)

[1] Read: Anytime
Write: Anytime

Table 2-54. PIFH Register Field Descriptions

Field	Description
7-0 PIFH	**Port H interrupt flag**— The flag bit is set after an active edge was applied to the associated input pin. This can be a rising or a falling edge based on the state of the polarity select register. Writing a logic “1” to the corresponding bit field clears the flag. 1 Active edge on the associated bit has occurred (an interrupt will occur if the associated enable bit is set) 0 No active edge occurred

2.3.58 Port J Data Register (PTJ)

Address 0x0268 Access: User read/write[1]

	7	6	5	4	3	2	1	0
R	PTJ7	PTJ6	0	0	0	0	PTJ1	PTJ0
W								
Reset	0	0	0	0	0	0	0	0

Figure 2-56. Port J Data Register (PTJ)

[1] Read: Anytime, the data source depends on the data direction value
Write: Anytime

Table 2-55. PTJ Register Field Descriptions

Field	Description
7-6, 1-0 PTJ	**Port J general purpose input/output data**—Data Register, pin interrupt input/output The associated pin can be used as general purpose I/O. In general purpose output mode the register bit value is driven to the pin. If the associated data direction bit is set to 1, a read returns the value of the port register bit, otherwise the buffered pin input state is read. • Pin interrupts can be generated if enabled in input or output mode.

2.3.59 Port J Input Register (PTIJ)

Address 0x0269 Access: User read[1]

	7	6	5	4	3	2	1	0
R	PTIJ7	PTIJ6	0	0	0	0	PTIJ1	PTIJ0
W								
Reset	u	u	u	u	u	u	u	u

= Unimplemented or Reserved u = Unaffected by reset

Figure 2-57. Port J Input Register (PTIJ)

[1] Read: Anytime
Write:Never, writes to this register have no effect

Table 2-56. PTIJ Register Field Descriptions

Field	Description
7-6, 1-0 PTIJ	**Port J input data**— A read always returns the buffered input state of the associated pin. It can be used to detect overload or short circuit conditions on output pins.

2.3.60 Port J Data Direction Register (DDRJ)

Address 0x026A Access: User read/write[1]

	7	6	5	4	3	2	1	0
R	DDRJ7	DDRJ6	0	0	0	0	DDRJ1	DDRJ0
W								
Reset	0	0	0	0	0	0	0	0

Figure 2-58. Port J Data Direction Register (DDRJ)

[1] Read: Anytime
Write: Anytime

Table 2-57. DDRJ Register Field Descriptions

Field	Description
7-6, 1-0 DDRJ	**Port J data direction**— This bit determines whether the associated pin is an input or output. 1 Associated pin configured as output 0 Associated pin configured as input

2.3.61 Port J Reduced Drive Register (RDRJ)

Address 0x026B — Access: User read/write[1]

	7	6	5	4	3	2	1	0
R	RDRJ7	RDRJ6	0	0	0	0	RDRJ1	RDRJ0
W								
Reset	0	0	0	0	0	0	0	0

Figure 2-59. Port J Reduced Drive Register (RDRJ)

[1] Read: Anytime
Write: Anytime

Table 2-58. RDRJ Register Field Descriptions

Field	Description
7-6, 1-0 RDRJ	**Port J reduced drive**—Select reduced drive for outputs This bit configures the drive strength of the associated output pin as either full or reduced. If a pin is used as input this bit has no effect. The reduced drive function is independent of which function is being used on a particular pin. 1 Reduced drive selected (approx. 1/5 of the full drive strength). 0 Full drive strength enabled.

2.3.62 Port J Pull Device Enable Register (PERJ)

Address 0x026C — Access: User read/write[1]

	7	6	5	4	3	2	1	0
R	PERJ7	PERJ6	0	0	0	0	PERJ1	PERJ0
W								
Reset	1	1	1	1	1	1	1	1

Figure 2-60. Port J Pull Device Enable Register (PERJ)

[1] Read: Anytime
Write: Anytime

Table 2-59. PERJ Register Field Descriptions

Field	Description
7-6, 1-0 PERJ	**Port J pull device enable**—Enable pull device on input pin This bit controls whether a pull device on the associated port input pin is active. If a pin is used as output this bit has no effect. The polarity is selected by the related polarity select register bit. 1 Pull device enabled 0 Pull device disabled

2.3.63 Port J Polarity Select Register (PPSJ)

Address 0x026D Access: User read/write[1]

	7	6	5	4	3	2	1	0
R	PPSJ7	PPSJ6	0	0	0	0	PPSJ1	PPSJ0
W								
Reset	0	0	0	0	0	0	0	0

Figure 2-61. Port J Polarity Select Register (PPSJ)

[1] Read: Anytime
Write: Anytime

Table 2-60. PPSJ Register Field Descriptions

Field	Description
7-6, 1-0 PPSJ	**Port J pull device select**—Configure pull device and pin interrupt edge polarity on input pin This bit selects a pull-up or a pull-down device if enabled on the associated port input pin. This bit also selects the polarity of the active pin interrupt edge. 1 A pull-down device selected; rising edge selected 0 A pull-up device selected; falling edge selected

2.3.64 Port J Interrupt Enable Register (PIEJ)

Address 0x026E Access: User read/write[1]

	7	6	5	4	3	2	1	0
R	PIEJ7	PIEJ6	0	0	0	0	PIEJ1	PIEJ0
W								
Reset	0	0	0	0	0	0	0	0

Figure 2-62. Port J Interrupt Enable Register (PIEJ)

[1] Read: Anytime
Write: Anytime

Table 2-61. PIEJ Register Field Descriptions

Field	Description
7-6, 1-0 PIEJ	**Port J interrupt enable**— This bit enables or disables on the edge sensitive pin interrupt on the associated pin. 1 Interrupt enabled 0 Interrupt disabled (interrupt flag masked)

2.3.65 Port J Interrupt Flag Register (PIFJ)

Address 0x026F — Access: User read/write[1]

	7	6	5	4	3	2	1	0
R	PIFJ7	PIFJ6	0	0	0	0	PIFJ1	PIFJ0
W								
Reset	0	0	0	0	0	0	0	0

Figure 2-63. Port J Interrupt Flag Register (PIFJ)

[1] Read: Anytime
Write: Anytime

Table 2-62. PIFJ Register Field Descriptions

Field	Description
7-6, 1-0 PIFJ	**Port J interrupt flag**— The flag bit is set after an active edge was applied to the associated input pin. This can be a rising or a falling edge based on the state of the polarity select register. Writing a logic “1” to the corresponding bit field clears the flag. 1 Active edge on the associated bit has occurred (an interrupt will occur if the associated enable bit is set) 0 No active edge occurred

2.3.66 Port AD0 Data Register 0 (PT0AD0)

Address 0x0270 — Access: User read/write[1]

	7	6	5	4	3	2	1	0
R W	PT0AD07	PT0AD06	PT0AD05	PT0AD04	PT0AD03	PT0AD02	PT0AD01	PT0AD00
Altern. Function	AN15	AN14	AN13	AN12	AN11	AN10	AN9	AN8
Reset	0	0	0	0	0	0	0	0

Figure 2-64. Port AD0 Data Register 0 (PT0AD0)

[1] Read: Anytime, the data source depends on the data direction value
Write: Anytime

Table 2-63. PT0AD0 Register Field Descriptions

Field	Description
7-0 PT0AD0	**Port AD0 general purpose input/output data**—Data Register, ATD AN analog input When not used with the alternative function, the associated pin can be used as general purpose I/O. In general purpose output mode the register bit value is driven to the pin. If the associated data direction bit is set to 1, a read returns the value of the port register bit, otherwise the buffered pin input state is read.

2.3.67 Port AD0 Data Register 1 (PT1AD0)

Address 0x0271 Access: User read/write[1]

	7	6	5	4	3	2	1	0
R W	PT1AD07	PT1AD06	PT1AD05	PT1AD04	PT1AD03	PT1AD02	PT1AD01	PT1AD00
Altern. Function	AN7	AN6	AN5	AN4	AN3	AN2	AN1	AN0
Reset	0	0	0	0	0	0	0	0

Figure 2-65. Port AD0 Data Register 1 (PT1AD0)

[1] Read: Anytime, the data source depends on the data direction value
Write: Anytime

Table 2-64. PT1AD0 Register Field Descriptions

Field	Description
7-0 PT1AD0	**Port AD0 general purpose input/output data**—Data Register, ATD AN analog input When not used with the alternative function, the associated pin can be used as general purpose I/O. In general purpose output mode the register bit value is driven to the pin. If the associated data direction bit is set to 1, a read returns the value of the port register bit, otherwise the buffered pin input state is read.

2.3.68 Port AD0 Data Direction Register 0 (DDR0AD0)

Address 0x0272 Access: User read/write[1]

	7	6	5	4	3	2	1	0
R W	DDR0AD07	DDR0AD06	DDR0AD05	DDR0AD04	DDR0AD03	DDR0AD02	DDR0AD01	DDR0AD00
Reset	0	0	0	0	0	0	0	0

Figure 2-66. Port AD0 Data Direction Register 0 (DDR0AD0)

[1] Read: Anytime
Write: Anytime

Table 2-65. DDR0AD0 Register Field Descriptions

Field	Description
7-0 DDR0AD0	**Port AD0 data direction**— This bit determines whether the associated pin is an input or output. To use the digital input function the ATD Digital Input Enable Register (ATD0DIEN) has to be set to logic level “1”. 1 Associated pin configured as output 0 Associated pin configured as input

2.3.69 Port AD0 Data Direction Register 1 (DDR1AD0)

Address 0x0273 Access: User read/write[1]

	7	6	5	4	3	2	1	0
R/W	DDR1AD07	DDR1AD06	DDR1AD05	DDR1AD04	DDR1AD03	DDR1AD02	DDR1AD01	DDR1AD00
Reset	0	0	0	0	0	0	0	0

Figure 2-67. Port AD0 Data Direction Register 1 (DDR1AD0)

[1] Read: Anytime
Write: Anytime

Table 2-66. DDR1AD0 Register Field Descriptions

Field	Description
7-0 DDR1AD0	**Port AD0 data direction**— This bit determines whether the associated pin is an input or output. To use the digital input function the ATD Digital Input Enable Register (ATD0DIEN) has to be set to logic level “1”. 1 Associated pin configured as output 0 Associated pin configured as input

2.3.70 Port AD0 Reduced Drive Register 0 (RDR0AD0)

Address 0x0274 Access: User read/write[1]

	7	6	5	4	3	2	1	0
R/W	RDR0AD07	RDR0AD06	RDR0AD05	RDR0AD04	RDR0AD03	RDR0AD02	RDR0AD01	RDR0AD00
Reset	0	0	0	0	0	0	0	0

Figure 2-68. Port AD0 Reduced Drive Register 0 (RDR0AD0)

[1] Read: Anytime
Write: Anytime

Table 2-67. RDR0AD0 Register Field Descriptions

Field	Description
7-0 RDR0AD0	**Port AD0 reduced drive**—Select reduced drive for output pin This bit configures the drive strength of the associated output pin as either full or reduced. If a pin is used as input this bit has no effect. The reduced drive function is independent of which function is being used on a particular pin. 1 Reduced drive selected (approx. 1/5 of the full drive strength) 0 Full drive strength enabled

2.3.71 Port AD0 Reduced Drive Register 1 (RDR1AD0)

Address 0x0275 Access: User read/write[1]

	7	6	5	4	3	2	1	0
R/W	RDR1AD07	RDR1AD06	RDR1AD05	RDR1AD04	RDR1AD03	RDR1AD02	RDR1AD01	RDR1AD00
Reset	0	0	0	0	0	0	0	0

Figure 2-69. Port AD0 Reduced Drive Register 1 (RDR1AD0)

[1] Read: Anytime
Write: Anytime

Table 2-68. RDR1AD0 Register Field Descriptions

Field	Description
7-0 RDR1AD0	**Port AD0 reduced drive**—Select reduced drive for output pin This bit configures the drive strength of the associated output pin as either full or reduced. If a pin is used as input this bit has no effect. The reduced drive function is independent of which function is being used on a particular pin. 1 Reduced drive selected (approx. 1/5 of the full drive strength) 0 Full drive strength enabled

2.3.72 Port AD0 Pull Up Enable Register 0 (PER0AD0)

Address 0x0276 Access: User read/write[1]

	7	6	5	4	3	2	1	0
R/W	PER0AD07	PER0AD06	PER0AD05	PER0AD04	PER0AD03	PER0AD02	PER0AD01	PER0AD00
Reset	0	0	0	0	0	0	0	0

Figure 2-70. Port AD0 Pull Device Up Register 0 (PER0AD0)

[1] Read: Anytime
Write: Anytime

Table 2-69. PER0AD0 Register Field Descriptions

Field	Description
7-0 PER0AD0	**Port AD0 pull device enable**—Enable pull-up device on input pin This bit controls whether a pull device on the associated port input pin is active. If a pin is used as output this bit has no effect. The polarity is selected by the related polarity select register bit. 1 Pull device enabled 0 Pull device disabled

2.3.73 Port AD0 Pull Up Enable Register 1 (PER1AD0)

Address 0x0277 Access: User read/write[1]

	7	6	5	4	3	2	1	0
R/W	PER1AD07	PER1AD06	PER1AD05	PER1AD04	PER1AD03	PER1AD02	PER1AD01	PER1AD00
Reset	0	0	0	0	0	0	0	0

Figure 2-71. Port AD0 Pull Up Enable Register 1 (PER1AD0)

[1] Read: Anytime
Write: Anytime

Table 2-70. PER1AD0 Register Field Descriptions

Field	Description
7-0 PER1AD0	**Port AD0 pull device enable**—Enable pull-up device on input pin This bit controls whether a pull device on the associated port input pin is active. If a pin is used as output this bit has no effect. The polarity is selected by the related polarity select register bit. 1 Pull device enabled 0 Pull device disabled

2.3.74 PIM Reserved Registers

Address 0x0278-0x27F Access: User read[1]

	7	6	5	4	3	2	1	0
R	0	0	0	0	0	0	0	0
W								
Reset	0	0	0	0	0	0	0	0

= Unimplemented or Reserved u = Unaffected by reset

Figure 2-72. PIM Reserved Registers

[1] Read: Always reads 0x00
Write: Unimplemented

2.4 Functional Description

2.4.1 General

Each pin except PE0, PE1, and BKGD can act as general purpose I/O. In addition each pin can act as an output or input of a peripheral module.

2.4.2 Registers

A set of configuration registers is common to all ports with exception of the ATD port (Table 2-71). All registers can be written at any time, however a specific configuration might not become active.

For example selecting a pull-up device: This device does not become active while the port is used as a push-pull output.

Table 2-71. Register availability per port[1]

Port	Data	Input	Data Direction	Reduced Drive	Pull Enable	Polarity Select	Wired-Or Mode	Interrupt Enable	Interrupt Flag	Routing
A	yes	-	yes	yes	yes	-	-	-	-	-
B	yes	-	yes			-	-	-	-	-
E	yes	-	yes			-	-	-	-	-
K	yes	-	yes			-	-	-	-	-
T	yes	yes	yes	yes	yes	yes	-	-	-	yes
S	yes	yes	yes	yes	yes	yes	yes	-	-	-
M	yes	yes	yes	yes	yes	yes	yes	-	-	yes
P	yes	yes	yes	yes	yes	yes	-	yes	yes	-
H	yes	yes	yes	yes	yes	yes	-	yes	yes	-
J	yes	yes	yes	yes	yes	yes	-	yes	yes	-
AD	yes	-	yes	yes	yes	-	-	-	-	-

[1] Each cell represents one register with individual configuration bits

2.4.2.1 Data register (PORTx, PTx)

This register holds the value driven out to the pin if the pin is used as a general purpose I/O.

Writing to this register has only an effect on the pin if the pin is used as general purpose output. When reading this address, the buffered state of the pin is returned if the associated data direction register bit is set to “0”.

If the data direction register bits are set to logic level “1”, the contents of the data register is returned. This is independent of any other configuration (Figure 2-73).

2.4.2.2 Input register (PTIx)

This is a read-only register and always returns the buffered state of the pin (Figure 2-73).

2.4.2.3 Data direction register (DDRx)

This register defines whether the pin is used as a input or an output.

If a peripheral module controls the pin the contents of the data direction register is ignored (Figure 2-73).

Independent of the pin usage with a peripheral module this register determines the source of data when reading the associated data register address (2.4.2.1/2-121).

NOTE

Due to internal synchronization circuits, it can take up to 2 bus clock cycles until the correct value is read on port data or port input registers, when changing the data direction register.

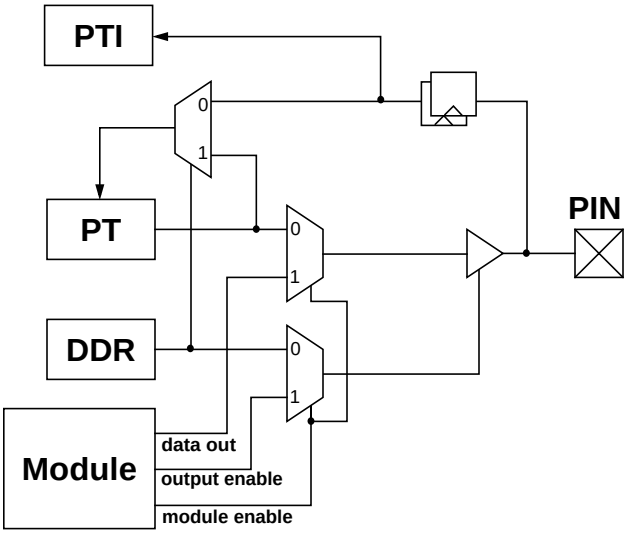

Figure 2-73. Illustration of I/O pin functionality

2.4.2.4 Reduced drive register (RDRx)

If the pin is used as an output this register allows the configuration of the drive strength independent of the use with a peripheral module.

2.4.2.5 Pull device enable register (PERx)

This register turns on a pull-up or pull-down device on the related pins determined by the associated polarity select register (2.4.2.5/2-122).

The pull device becomes active only if the pin is used as an input or as a wired-or output. Some peripheral modules only allow certain configurations of pull devices to become active. Refer to the respective bit descriptions.

2.4.2.6 Polarity select register (PPSx)

This register selects either a pull-up or pull-down device if enabled.

It only becomes active if the pin is used as an input. A pull-up device can be activated if the pin is used as a wired-or output.

2.4.2.7 Wired-or mode register (WOMx)

If the pin is used as an output this register turns off the active high drive. This allows wired-or type connections of outputs.

2.4.2.8 Interrupt enable register (PIEx)

If the pin is used as an interrupt input this register serves as a mask to the interrupt flag to enable/disable the interrupt.

2.4.2.9 Interrupt flag register (PIFx)

If the pin is used as an interrupt input this register holds the interrupt flag after a valid pin event.

2.4.2.10 Module routing registers (MODRR, PTTRR)

These registers allow software re-configuration of the pinouts of the different package options for specific peripherals:

- MODRR supports the re-routing of the SCI1 and SPI0 pins to alternative ports
- PTTRR supports the re-routing of the PWM and TIM channels to alternative ports

2.4.3 Pins and Ports

NOTE

Please refer to the device pinout section to determine the pin availability in the different package options.

2.4.3.1 BKGD pin

The BKGD pin is associated with the BDM module.

During reset, the BKGD pin is used as MODC input.

2.4.3.2 Port A, B

Port A pins PA[7:0] and Port B pins PB[7:0] can be used for general-purpose I/O.

2.4.3.3 Port E

Port E is associated with the free-running clock outputs ECLK, ECLKX2 and interrupt inputs $\overline{\text{IRQ}}$ and $\overline{\text{XIRQ}}$.

Port E pins PE[7:2] can be used for either general-purpose I/O or with the alternative functions.

Port E pin PE[7] an be used for either general-purpose I/O or as the free-running clock ECLKX2 output running at the core clock rate.

Port E pin PE[4] an be used for either general-purpose I/O or as the free-running clock ECLK output running at the bus clock rate or at the programmed divided clock rate.

Port E pin PE[1] can be used for either general-purpose input or as the level- or falling edge-sensitive $\overline{IRQ}$ interrupt input. $\overline{IRQ}$ will be enabled by setting the IRQEN configuration bit (2.3.14/2-83) and clearing the I-bit in the CPU condition code register. It is inhibited at reset so this pin is initially configured as a simple input with a pull-up.

Port E pin PE[0] can be used for either general-purpose input or as the level-sensitive $\overline{XIRQ}$ interrupt input. $\overline{XIRQ}$ can be enabled by clearing the X-bit in the CPU condition code register. It is inhibited at reset so this pin is initially configured as a high-impedance input with a pull-up.

2.4.3.4 Port K

Port K pins PK[7,5:0] can be used for general-purpose I/O.

2.4.3.5 Port T

This port is associated with TIM and PWM.

Port T pins PT[7:4] can be used for either general-purpose I/O, or with the PWM or with the channels of the standard Timer subsystem.

Port T pins PT[3:0] can be used for either general-purpose I/O, or with the channels of the standard Timer subsystem.

The TIM pins IOC2-0 can be re-routed.

2.4.3.6 Port S

This port is associated with SPI0, SCI0 and SCI1.

Port S pins PS[7:4] can be used either for general-purpose I/O, or with the SPI0 subsystem.

Port S pins PS[3:2] can be used either for general-purpose I/O, or with the SCI1 subsystem.

Port S pins PS[1:0] can be used either for general-purpose I/O, or with the SCI0 subsystem.

The SPI0 and SCI1 pins can be re-routed.

2.4.3.7 Port M

This port is associated with CAN0 and SCI1.

Port M pins PM[7:6] can be used for either general purpose I/O.

Port M pins PM[1:0] can be used for either general purpose I/O, or with the CAN0 or with the SCI1 subsystem.

Port M pins PM[5:2] can be used for general purpose I/O.

2.4.3.8 Port P

This port is associated with the PWM, TIM and SCI1.

Port P pins PP[7:3] can be used for either general purpose I/O with pin interrupt capability, or with the PWM or with the channels of the standard Timer.subsystem.

Port P pins PP[2,0] can be used for either general purpose I/O, or with the PWM or with the TIM or with the SCI1 subsystem.

Port P pin PP[1] can be used for either general purpose I/O, or with the PWM or with the TIM subsystem.

2.4.3.9 Port H

Port H pins PH[7:0] can be used for general purpose I/O with pin interrupt capability.

2.4.3.10 Port J

Port J pins PJ[7,6,1,0] can be used for general purpose I/O with pin-interrupt capability.

2.4.3.11 Port AD

This port is associated with the ATD.

Port AD pins PAD[15:0] can be used for either general purpose I/O, or with the ATD0 subsystem.

2.4.4 Pin interrupts

Ports P, H and J offer pin interrupt capability. The interrupt enable as well as the sensitivity to rising or falling edges can be individually configured on a per-pin basis. All bits/pins in a port share the same interrupt vector. Interrupts can be used with the pins configured as inputs or outputs.

An interrupt is generated when a bit in the port interrupt flag register and its corresponding port interrupt enable bit are both set. The pin interrupt feature is also capable to wake up the CPU when it is in STOP or WAIT mode.

A digital filter on each pin prevents pulses (Figure 2-75) shorter than a specified time from generating an interrupt. The minimum time varies over process conditions, temperature and voltage (Figure 2-74 and Table 2-72).

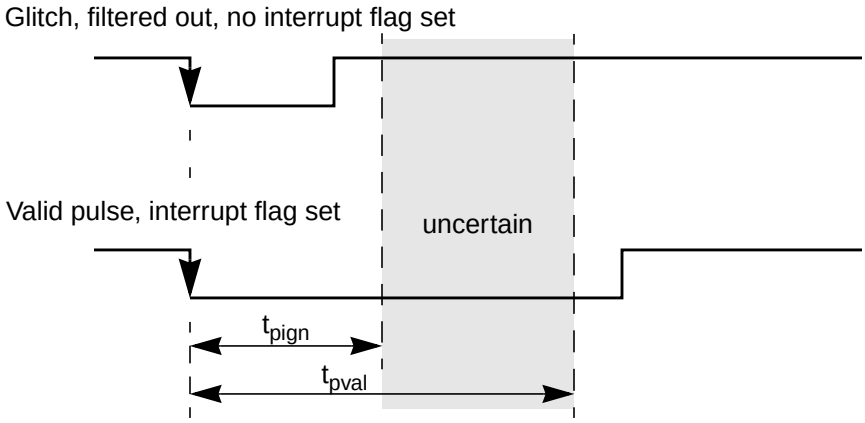

Figure 2-74. Interrupt Glitch Filter on Port P, H and J (PPS=0)

Table 2-72. Pulse Detection Criteria

Pulse	Mode		
	$\overline{STOP}$		STOP[1]
		Unit	
Ignored	$t_{pulse} \leq 3$	bus clocks	$t_{pulse} \leq t_{pign}$
Uncertain	$3 < t_{pulse} < 4$	bus clocks	$t_{pign} < t_{pulse} < t_{pval}$
Valid	$t_{pulse} \geq 4$	bus clocks	$t_{pulse} \geq t_{pval}$

[1]These values include the spread of the oscillator frequency over temperature, voltage and process.

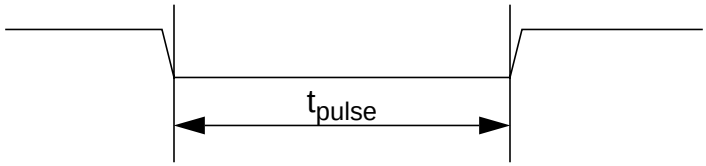

Figure 2-75. Pulse Illustration

A valid edge on an input is detected if 4 consecutive samples of a passive level are followed by 4 consecutive samples of an active level directly or indirectly.

The filters are continuously clocked by the bus clock in RUN and WAIT mode. In STOP mode the clock is generated by an RC-oscillator in the Port Integration Module. To maximize current saving the RC oscillator runs only if the following condition is true on any pin individually:

Sample count <= 4 and interrupt enabled (PIE=1) and interrupt flag not set (PIF=0).

2.5 Initialization Information

2.5.1 Port Data and Data Direction Register writes

It is not recommended to write PORTx/PTx and DDRx in a word access. When changing the register pins from inputs to outputs, the data may have extra transitions during the write access. Initialize the port data register before enabling the outputs.

Chapter 3
Memory Mapping Control (S12XMMCV4)

Revision History

Rev. No. (Item No.)	Date (Submitted By)	Sections Affected	Substantial Change(s)
v04.09	01-Feb-08		- Minor changes
v04.10	17-Feb-09		- Minor changes
v04.11	30-Jun-10	3.3.2.7/3-139	- Removed confusing statements in EPAGE description

3.1 Introduction

This section describes the functionality of the module mapping control (MMC) sub-block of the S12X platform. The block diagram of the MMC is shown in Figure 3-1.

The MMC module controls the multi-master priority accesses, the selection of internal resources . Internal buses, including internal memories and peripherals, are controlled in this module. The local address space for each master is translated to a global memory space.

3.1.1 Terminology

Table 3-1. Acronyms and Abbreviations

Logic level “1”	Voltage that corresponds to Boolean true state
Logic level “0”	Voltage that corresponds to Boolean false state
0x	Represents hexadecimal number
x	Represents logic level ’don’t care’
Byte	8-bit data
word	16-bit data
local address	based on the 64KB Memory Space (16-bit address)
global address	based on the 8MB Memory Space (23-bit address)
Aligned address	Address on even boundary
Mis-aligned address	Address on odd boundary
Bus Clock	System Clock. Refer to CRG Block Guide.
single-chip modes	Normal Single-Chip Mode Special Single-Chip Mode
normal modes	Normal Single-Chip Mode
special modes	Special Single-Chip Mode
NS	Normal Single-Chip Mode
SS	Special Single-Chip Mode
Unimplemented areas	Areas which are accessible by the pages (RPAGE,PPAGE,EPAGE) and not implemented
PRR	Port Replacement Registers
PRU	Port Replacement Unit located on the emulator side
MCU	MicroController Unit
NVM	Non-volatile Memory; Flash, Data FLASH or ROM
IFR	Information Row sector located on the top of NVM. For Test purposes.

3.1.2 Features

The main features of this block are:

- Paging capability to support a global 8MB memory address space
- Bus arbitration between the masters CPU, BDM
- Simultaneous accesses to different resources[1] (internal, and peripherals) (see Figure 3-1)
- Resolution of target bus access collision
- MCU operation mode control
- MCU security control
- Separate memory map schemes for each master CPU, BDM
- ROM control bits to enable the on-chip FLASH or ROM selection
- Generation of system reset when CPU accesses an unimplemented address (i.e., an address which does not belong to any of the on-chip modules) in single-chip modes

1. Resources are also called targets.

3.1.3 S12X Memory Mapping

The S12X architecture implements a number of memory mapping schemes including

- a CPU 8MB global map, defined using a global page (GPAGE) register and dedicated 23-bit address load/store instructions.
- a BDM 8MB global map, defined using a global page (BDMGPR) register and dedicated 23-bit address load/store instructions.
- a (CPU or BDM) 64KB local map, defined using specific resource page (RPAGE, EPAGE and PPAGE) registers and the default instruction set. The 64KB visible at any instant can be considered as the local map accessed by the 16-bit (CPU or BDM) address.

The MMC module performs translation of the different memory mapping schemes to the specific global (physical) memory implementation.

3.1.4 Modes of Operation

This subsection lists and briefly describes all operating modes supported by the MMC.

3.1.4.1 Power Saving Modes

- Run mode
  MMC is functional during normal run mode.
- Wait mode
  MMC is functional during wait mode.
- Stop mode
  MMC is inactive during stop mode.

3.1.4.2 Functional Modes

- Single chip modes
  In normal and special single chip mode the internal memory is used.

3.1.5 Block Diagram

Figure 3-1 shows a block diagram of the MMC.

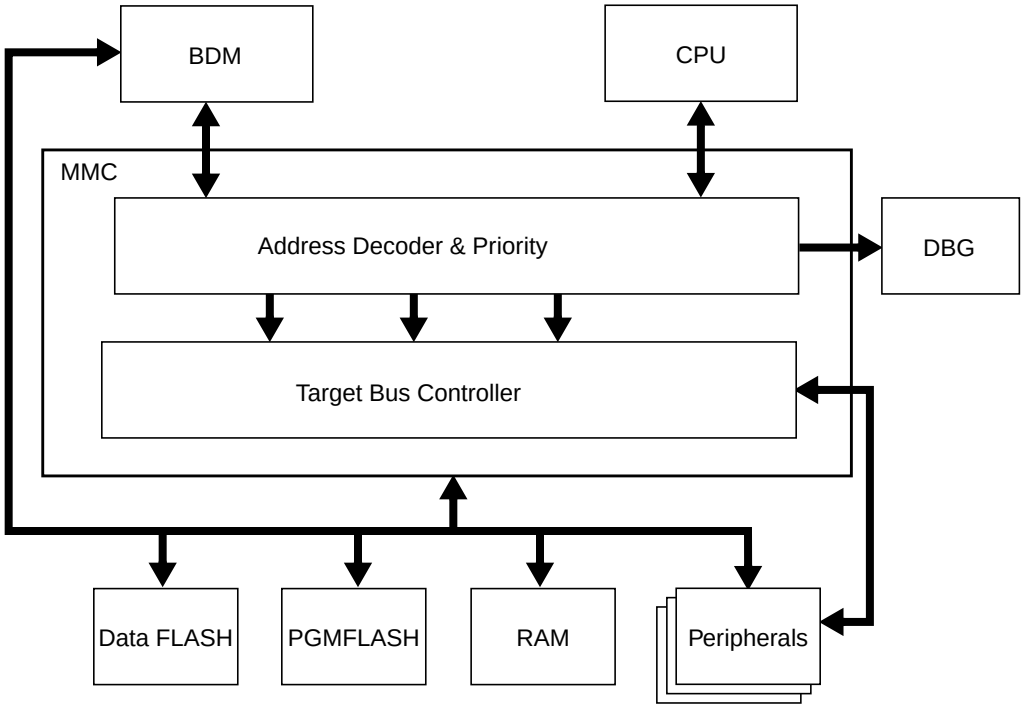

Figure 3-1. MMC Block Diagram

3.2 External Signal Description

The user is advised to refer to the SoC Guide for port configuration and location of external bus signals. Some pins may not be bonded out in all implementations.

Table 3-2 outlines the pin names and functions. It also provides a brief description of their operation.

Table 3-2. External Input Signals Associated with the MMC

Signal	I/O	Description	Availability
MODC	I	Mode input	Latched after $\overline{\text{RESET}}$ (active low)

3.3 Memory Map and Registers

3.3.1 Module Memory Map

A summary of the registers associated with the MMC block is shown in Figure 3-2. Detailed descriptions of the registers and bits are given in the subsections that follow.

Address	Register Name		Bit 7	6	5	4	3	2	1	Bit 0
0x000A	Reserved	R	0	0	0	0	0	0	0	0
		W								
0x000B	MODE	R	MODC	0	0	0	0	0	0	0
		W								
0x0010	GPAGE	R	0	GP6	GP5	GP4	GP3	GP2	GP1	GP0
		W								
0x0011	DIRECT	R	DP15	DP14	DP13	DP12	DP11	DP10	DP9	DP8
		W								
0x0012	Reserved	R	0	0	0	0	0	0	0	0
		W								
0x0013	MMCCTL1	R	MGRAMON	0	DFIFRON	PGMIFRON	0	0	0	0
		W								
0x0014	Reserved	R	0	0	0	0	0	0	0	0
		W								
0x0015	PPAGE	R	PIX7	PIX6	PIX5	PIX4	PIX3	PIX2	PIX1	PIX0
		W								
0x0016	RPAGE	R	RP7	RP6	RP5	RP4	RP3	RP2	RP1	RP0
		W								
0x0017	EPAGE	R	EP7	EP6	EP5	EP4	EP3	EP2	EP1	EP0
		W								

= Unimplemented or Reserved

Figure 3-2. MMC Register Summary

3.3.2 Register Descriptions

3.3.2.1 Mode Register (MODE)

Address: 0x000B PRR

	7	6	5	4	3	2	1	0
R	MODC	0	0	0	0	0	0	0
W								
Reset	MODC[1]	0	0	0	0	0	0	0

1. External signal (see Table 3-2).

= Unimplemented or Reserved

Figure 3-3. Mode Register (MODE)

Read: Anytime. Write: Only if a transition is allowed (see Figure 3-5).

The MODE bits of the MODE register are used to establish the MCU operating mode.

Table 3-3. MODE Field Descriptions

Field	Description
7 MODC	**Mode Select Bit** — This bit controls the current operating mode during $\overline{\text{RESET}}$ high (inactive). The external mode pin MODC determines the operating mode during $\overline{\text{RESET}}$ low (active). The state of the pin is latched into the respective register bit after the $\overline{\text{RESET}}$ signal goes inactive (see Figure 3-3). Write restrictions exist to disallow transitions between certain modes. Figure 3-5 illustrates all allowed mode changes. Attempting non authorized transitions will not change the MODE bits, but it will block further writes to these register bits except in special modes. Write accesses to the MODE register are blocked when the device is secured.

Figure 3-4.

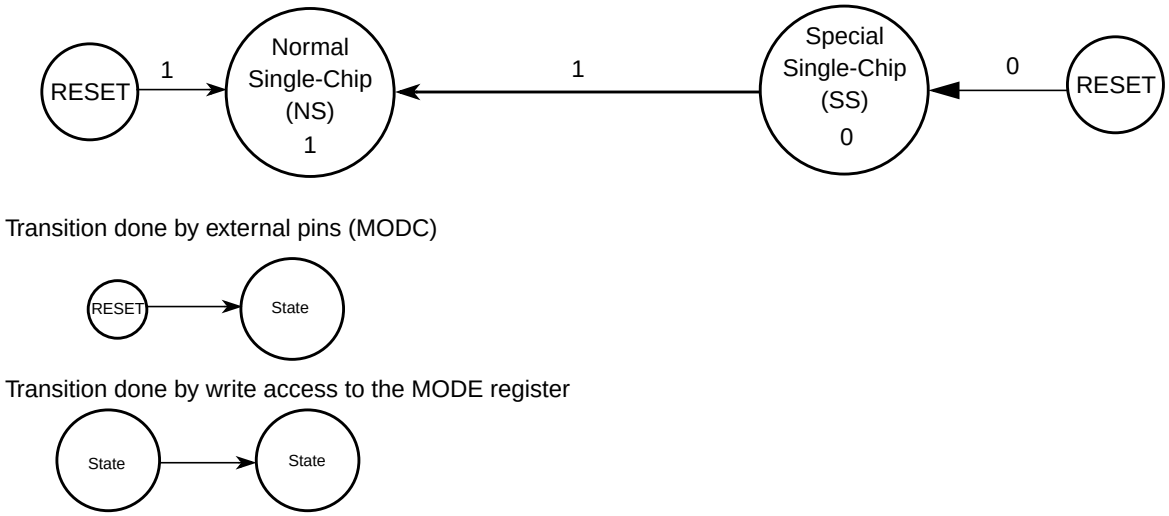

Figure 3-5. Mode Transition Diagram when MCU is Unsecured

3.3.2.2 Global Page Index Register (GPAGE)

Address: 0x0010

	7	6	5	4	3	2	1	0
R	0	GP6	GP5	GP4	GP3	GP2	GP1	GP0
W								
Reset	0	0	0	0	0	0	0	0

= Unimplemented or Reserved

Figure 3-6. Global Page Index Register (GPAGE)

Read: Anytime

Write: Anytime

The global page index register is used to construct a 23 bit address in the global map format. It is only used when the CPU is executing a global instruction (GLDAA, GLDAB, GLDD, GLDS, GLDX, GLDY,GSTAA, GSTAB, GSTD, GSTS, GSTX, GSTY) (see CPU Block Guide). The generated global address is the result of concatenation of the CPU local address [15:0] with the GPAGE register [22:16] (see Figure 3-7).

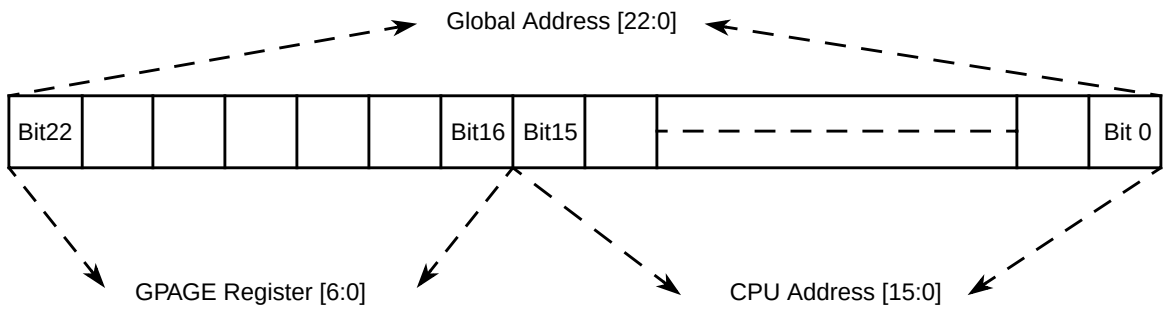

Figure 3-7. GPAGE Address Mapping

Table 3-4. GPAGE Field Descriptions

Field	Description
6–0 GP[6:0]	**Global Page Index Bits 6–0** — These page index bits are used to select which of the 128 64KB pages is to be accessed.

Example 3-1. This example demonstrates usage of the GPAGE register

```
LDX     #0x5000          ;Set GPAGE offset to the value of 0x5000
MOVB    #0x14, GPAGE     ;Initialize GPAGE register with the value of 0x14
GLDAA   X                ;Load Accu A from the global address 0x14_5000
```

3.3.2.3 Direct Page Register (DIRECT)

Address: 0x0011

	7	6	5	4	3	2	1	0
R/W	DP15	DP14	DP13	DP12	DP11	DP10	DP9	DP8
Reset	0	0	0	0	0	0	0	0

Figure 3-8. Direct Register (DIRECT)

Read: Anytime

Write: anytime in special modes, one time only in other modes.

This register determines the position of the 256B direct page within the memory map.It is valid for both global and local mapping scheme.

Table 3-5. DIRECT Field Descriptions

Field	Description
7–0 DP[15:8]	**Direct Page Index Bits 15–8** — These bits are used by the CPU when performing accesses using the direct addressing mode. The bits from this register form bits [15:8] of the address (see Figure 3-9).

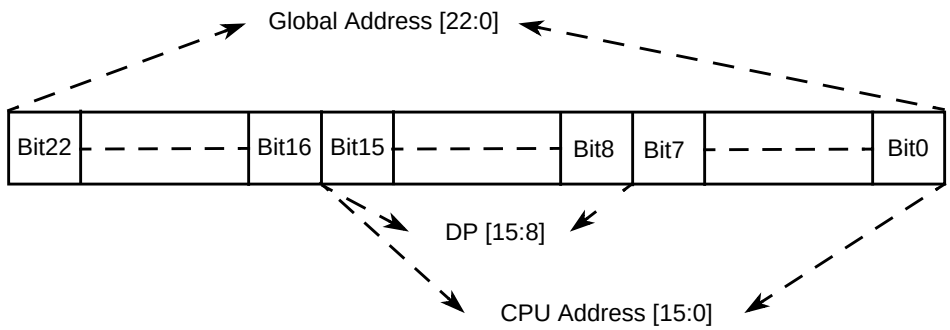

Figure 3-9. DIRECT Address Mapping

Bits [22:16] of the global address will be formed by the GPAGE[6:0] bits in case the CPU executes a global instruction in direct addressing mode or by the appropriate local address to the global address expansion (refer to Section 3.4.2.1.1, “Expansion of the Local Address Map).

Example 3-2. This example demonstrates usage of the Direct Addressing Mode

```
MOVB    #0x80,DIRECT     ;Set DIRECT register to 0x80. Write once only.
                         ;Global data accesses to the range 0xXX_80XX can be direct.
                         ;Logical data accesses to the range 0x80XX are direct.

LDY     <00              ;Load the Y index register from 0x8000 (direct access).
                         ;< operator forces direct access on some assemblers but in
                         ;many cases assemblers are “direct page aware” and can
                         ;automatically select direct mode.
```

3.3.2.4 MMC Control Register (MMCCTL1)

Address: 0x0013 PRR

	7	6	5	4	3	2	1	0
R	MGRAMON	0	DFIFRON	PGMIFRON	0	0	0	0
W								
Reset	0	0	0	0	0	0	0	0

= Unimplemented or Reserved

Figure 3-10. MMC Control Register (MMCCTL1)

Read: Anytime. .

Write: Refer to each bit description.

Table 3-6. MMCCTL1 Field Descriptions

Field	Description
7 MGRAMON	**Flash Memory Controller SCRATCH RAM visible in the global memory map** Write: Anytime This bit is used to made the Flash Memory Controller SCRATCH RAM visible in the global memory map. 0 Not visible in the global memory map. 1 Visible in the global memory map.
5 DFIFRON	**Data Flash Information Row (IFR) visible in the global memory map** Write: Anytime This bit is used to made the IFR sector of the Data Flash visible in the global memory map. 0 Not visible in the global memory map. 1 Visible in the global memory map.
4 PGMIFRON	**Program Flash Information Row (IFR) visible in the global memory map** Write: Anytime This bit is used to map the IFR sector of the Program Flash to address range 0x40_000-0x40_3FFF of the global memory map. 0 Not visible in the global memory map. 1 Visible in the global memory map.

3.3.2.5 Program Page Index Register (PPAGE)

Address: 0x0015

	7	6	5	4	3	2	1	0
R W	PIX7	PIX6	PIX5	PIX4	PIX3	PIX2	PIX1	PIX0
Reset	1	1	1	1	1	1	1	0

Figure 3-11. Program Page Index Register (PPAGE)

Read: Anytime

Write: Anytime

These eight index bits are used to page 16KB blocks into the Flash page window located in the local (CPU or BDM) memory map from address 0x8000 to address 0xBFFF (see Figure 3-12). This supports accessing up to 4MB of Flash (in the Global map) within the 64KB Local map. The PPAGE register is effectively used to construct paged Flash addresses in the Local map format. The CPU has special access to read and write this register directly during execution of CALL and RTC instructions..

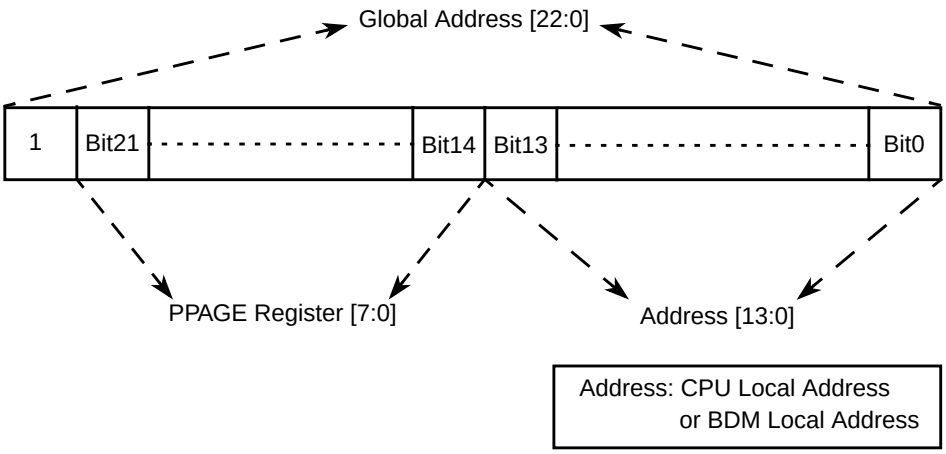

Figure 3-12. PPAGE Address Mapping

NOTE

Writes to this register using the special access of the CALL and RTC instructions will be complete before the end of the instruction execution.

Table 3-7. PPAGE Field Descriptions

Field	Description
7–0 PIX[7:0]	**Program Page Index Bits 7–0** — These page index bits are used to select which of the 256 FLASH or ROM array pages is to be accessed in the Program Page Window.

The reset value of 0xFE ensures that there is linear Flash space available between addresses 0x4000 and 0xFFFF out of reset.

The fixed 16K page from 0xC000-0xFFFF is the page number 0xFF.

3.3.2.6 RAM Page Index Register (RPAGE)

Address: 0x0016

	7	6	5	4	3	2	1	0
R W	RP7	RP6	RP5	RP4	RP3	RP2	RP1	RP0
Reset	1	1	1	1	1	1	0	1

Figure 3-13. RAM Page Index Register (RPAGE)

Read: Anytime

Write: Anytime

These eight index bits are used to page 4KB blocks into the RAM page window located in the local (CPU or BDM) memory map from address 0x1000 to address 0x1FFF (see Figure 3-14). This supports accessing up to 1022KB of RAM (in the Global map) within the 64KB Local map. The RAM page index register is effectively used to construct paged RAM addresses in the Local map format.

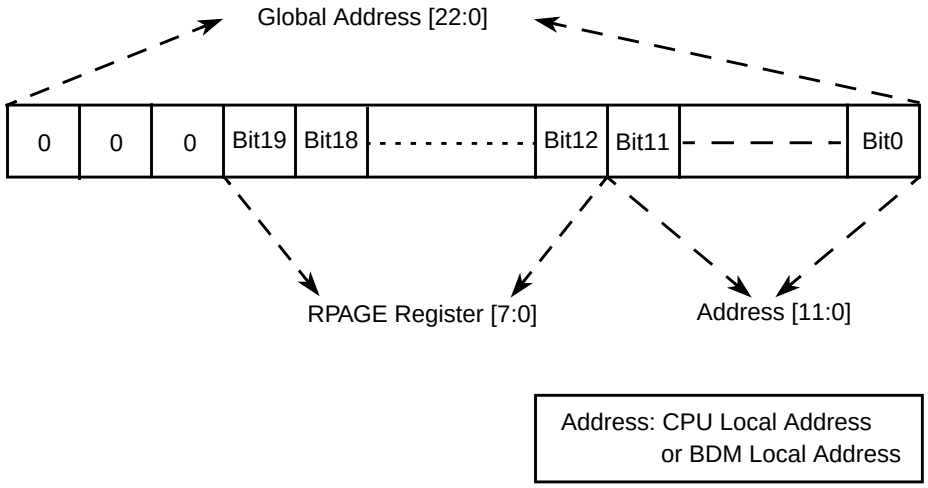

Figure 3-14. RPAGE Address Mapping

NOTE

Because RAM page 0 has the same global address as the register space, it is possible to write to registers through the RAM space when RPAGE = 0x00.

Table 3-8. RPAGE Field Descriptions

Field	Description
7–0 RP[7:0]	**RAM Page Index Bits 7–0** — These page index bits are used to select which of the 256 RAM array pages is to be accessed in the RAM Page Window.

The reset value of 0xFD ensures that there is a linear RAM space available between addresses 0x1000 and 0x3FFF out of reset.

The fixed 4K page from 0x2000–0x2FFF of RAM is equivalent to page 254 (page number 0xFE).

The fixed 4K page from 0x3000–0x3FFF of RAM is equivalent to page 255 (page number 0xFF).

NOTE

The page 0xFD (reset value) contains unimplemented area in the range not occupied by RAM if RAMSIZE is less than 12KB (Refer to Section 3.4.2.3, “Implemented Memory Map).

The two fixed 4KB pages (0xFE, 0xFF) contain unimplemented area in the range not occupied by RAM if RAMSIZE is less than 8KB (Refer to Section 3.4.2.3, “Implemented Memory Map).

3.3.2.7 Data FLASH Page Index Register (EPAGE)

Address: 0x0017

	7	6	5	4	3	2	1	0
R W	EP7	EP6	EP5	EP4	EP3	EP2	EP1	EP0
Reset	1	1	1	1	1	1	1	0

Figure 3-15. Data FLASH Page Index Register (EPAGE)

Read: Anytime

Write: Anytime

These eight index bits are used to page 1KB blocks into the Data FLASH page window located in the local (CPU or BDM) memory map from address 0x0800 to address 0x0BFF (see Figure 3-16). This supports accessing up to 256KB of Data FLASH (in the Global map) within the 64KB Local map. The Data FLASH page index register is effectively used to construct paged Data FLASH addresses in the Local map format.

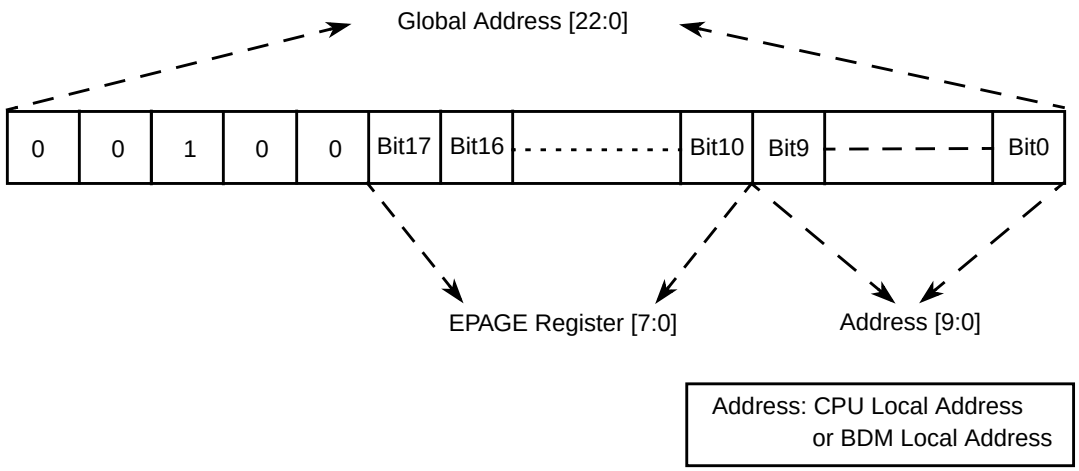

Figure 3-16. EPAGE Address Mapping

Table 3-9. EPAGE Field Descriptions

Field	Description
7–0 EP[7:0]	**Data FLASH Page Index Bits 7–0** — These page index bits are used to select which of the 256 Data FLASH array pages is to be accessed in the Data FLASH Page Window.

3.4 Functional Description

The MMC block performs several basic functions of the S12X sub-system operation: MCU operation modes, priority control, address mapping, select signal generation and access limitations for the system. Each aspect is described in the following subsections.

3.4.1 MCU Operating Mode

- Normal single-chip mode

  There is no external bus in this mode. The MCU program is executed from the internal memory and no external accesses are allowed.
- Special single-chip mode

  This mode is generally used for debugging single-chip operation, boot-strapping or security related operations. The active background debug mode is in control of the CPU code execution and the BDM firmware is waiting for serial commands sent through the BKGD pin. There is no external bus in this mode.

3.4.2 Memory Map Scheme

3.4.2.1 CPU and BDM Memory Map Scheme

The BDM firmware lookup tables and BDM register memory locations share addresses with other modules; however they are not visible in the global memory map during user's code execution. The BDM memory resources are enabled only during the READ_BD and WRITE_BD access cycles to distinguish between accesses to the BDM memory area and accesses to the other modules. (Refer to BDM Block Guide for further details).

When the MCU enters active BDM mode, the BDM firmware lookup tables and the BDM registers become visible in the local memory map in the range 0xFF00-0xFFFF (global address 0x7F_FF00 - 0x7F_FFFF) and the CPU begins execution of firmware commands or the BDM begins execution of hardware commands. The resources which share memory space with the BDM module will not be visible in the global memory map during active BDM mode.

Please note that after the MCU enters active BDM mode the BDM firmware lookup tables and the BDM registers will also be visible between addresses 0xBF00 and 0xBFFF if the PPAGE register contains value of 0xFF.

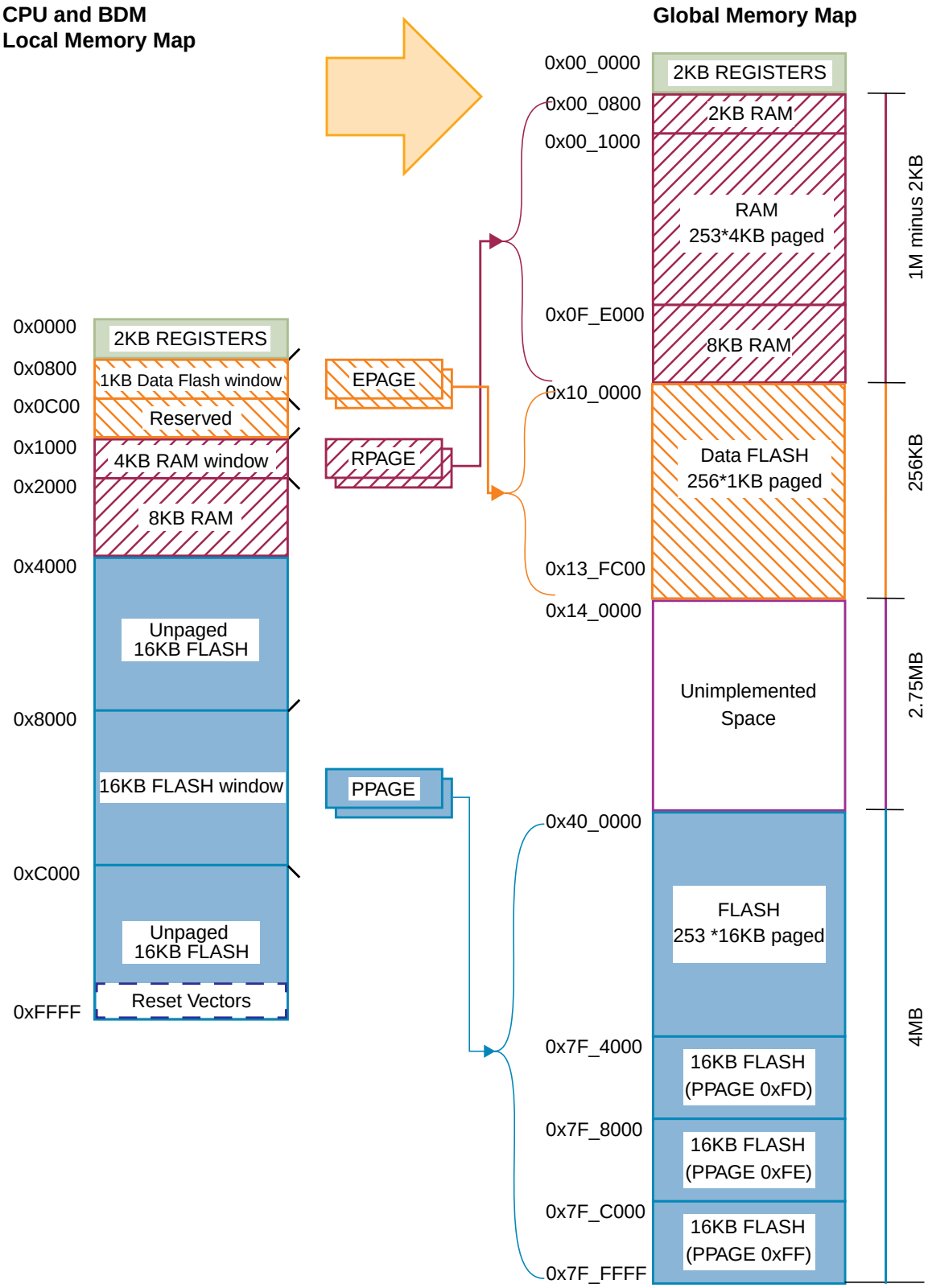

Figure 3-17. Expansion of the Local Address Map

3.4.2.1.1 Expansion of the Local Address Map

Expansion of the CPU Local Address Map

The program page index register in MMC allows accessing up to 4MB of FLASH or ROM in the global memory map by using the eight page index bits to page 256 16KB blocks into the program page window located from address 0x8000 to address 0xBFFF in the local CPU memory map.

The page value for the program page window is stored in the PPAGE register. The value of the PPAGE register can be read or written by normal memory accesses as well as by the CALL and RTC instructions (see Section 3.5.1, “CALL and RTC Instructions).

Control registers, vector space and parts of the on-chip memories are located in unpaged portions of the 64KB local CPU address space.

The starting address of an interrupt service routine must be located in unpaged memory unless the user is certain that the PPAGE register will be set to the appropriate value when the service routine is called. However an interrupt service routine can call other routines that are in paged memory. The upper 16KB block of the local CPU memory space (0xC000–0xFFFF) is unpaged. It is recommended that all reset and interrupt vectors point to locations in this area or to the other unpaged sections of the local CPU memory map.

The RAM page index register allows accessing up to 1MB minus 2KB of RAM in the global memory map by using the eight RPAGE index bits to page 4KB blocks into the RAM page window located in the local CPU memory space from address 0x1000 to address 0x1FFF. The Data FLASH page index register EPAGE allows accessing up to 256KB of Data Flash in the system by using the eight EPAGE index bits to page 1KB blocks into the Data FLASH page window located in the local CPU memory space from address 0x0800 to address 0x0BFF.

Expansion of the BDM Local Address Map

PPAGE, RPAGE, and EPAGE registers are also used for the expansion of the BDM local address to the global address. These registers can be read and written by the BDM.

The BDM expansion scheme is the same as the CPU expansion scheme.

3.4.2.2 Global Addresses Based on the Global Page

CPU Global Addresses Based on the Global Page

The seven global page index bits allow access to the full 8MB address map that can be accessed with 23 address bits. This provides an alternative way to access all of the various pages of FLASH, RAM and Data FLASH.

The GPAGE Register is used only when the CPU is executing a global instruction (see Section 3.3.2.2, “Global Page Index Register (GPAGE)). The generated global address is the result of concatenation of the CPU local address [15:0] with the GPAGE register [22:16] (see Figure 3-7).

BDM Global Addresses Based on the Global Page

The seven BDMGPR Global Page index bits allow access to the full 8MB address map that can be accessed with 23 address bits. This provides an alternative way to access all of the various pages of FLASH, RAM and Data FLASH.

The BDM global page index register (BDMGPR) is used only in the case the CPU is executing a firmware command which uses a global instruction (like GLDD, GSTD) or by a BDM hardware command (like WRITE_W, WRITE_BYTE, READ_W, READ_BYTE). See the BDM Block Guide for further details.

The generated global address is a result of concatenation of the BDM local address with the BDMGPR register [22:16] in the case of a hardware command or concatenation of the CPU local address and the BDMGPR register [22:16] in the case of a firmware command (see Figure 3-18).

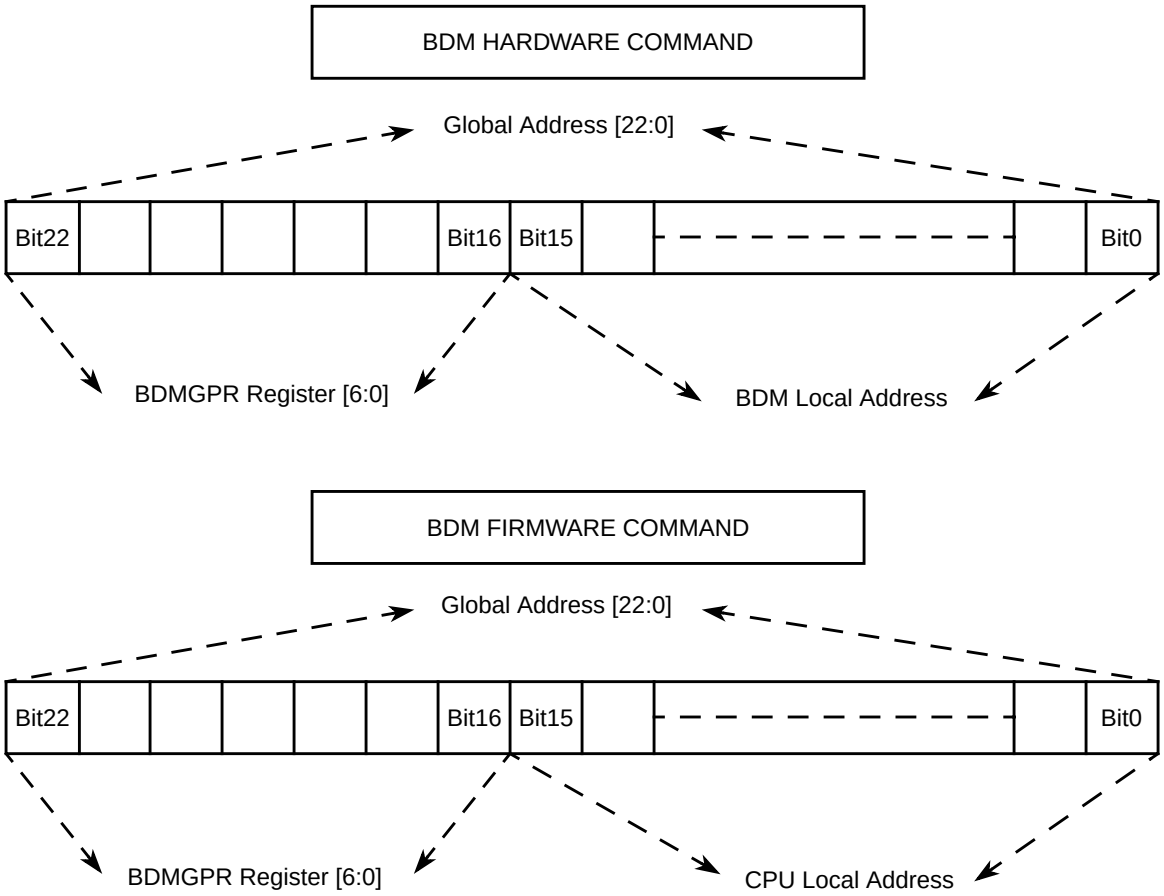

Figure 3-18. BDMGPR Address Mapping

3.4.2.3 Implemented Memory Map

The global memory spaces reserved for the internal resources (RAM, Data FLASH, and FLASH) are not determined by the MMC module. Size of the individual internal resources are however fixed in the design of the device cannot be changed by the user. Please refer to the SoC Guide for further details. Figure 3-19 and Table 3-10 show the memory spaces occupied by the on-chip resources. Please note that the memory spaces have fixed top addresses.

Table 3-10. Global Implemented Memory Space

Internal Resource	$Address
RAM	RAM_LOW = 0x10_0000 minus RAMSIZE[1]
Data FLASH	DF_HIGH = 0x10_0000 plus DFLASHSIZE[2]
FLASH	FLASH_LOW = 0x80_0000 minus FLASHSIZE[3]

1 RAMSIZE is the hexadecimal value of RAM SIZE in Bytes
2 DFLASHSIZE is the hexadecimal value of DFLASH SIZE in Bytes
3 FLASHSIZE is the hexadecimal value of FLASH SIZE in Bytes

In single-chip modes accesses by the CPU (except for firmware commands) to any of the unimplemented areas (see Figure 3-19) will result in an illegal access reset (system reset) in case of no MPU error. BDM accesses to the unimplemented areas are allowed but the data will be undefined.No misaligned word access from the BDM module will occur; these accesses are blocked in the BDM module (Refer to BDM Block Guide).

Misaligned word access to the last location of RAM is performed but the data will be undefined.

Misaligned word access to the last location of any global page (64KB) by any global instruction, is performed by accessing the last byte of the page and the first byte of the same page, considering the above mentioned misaligned access cases.

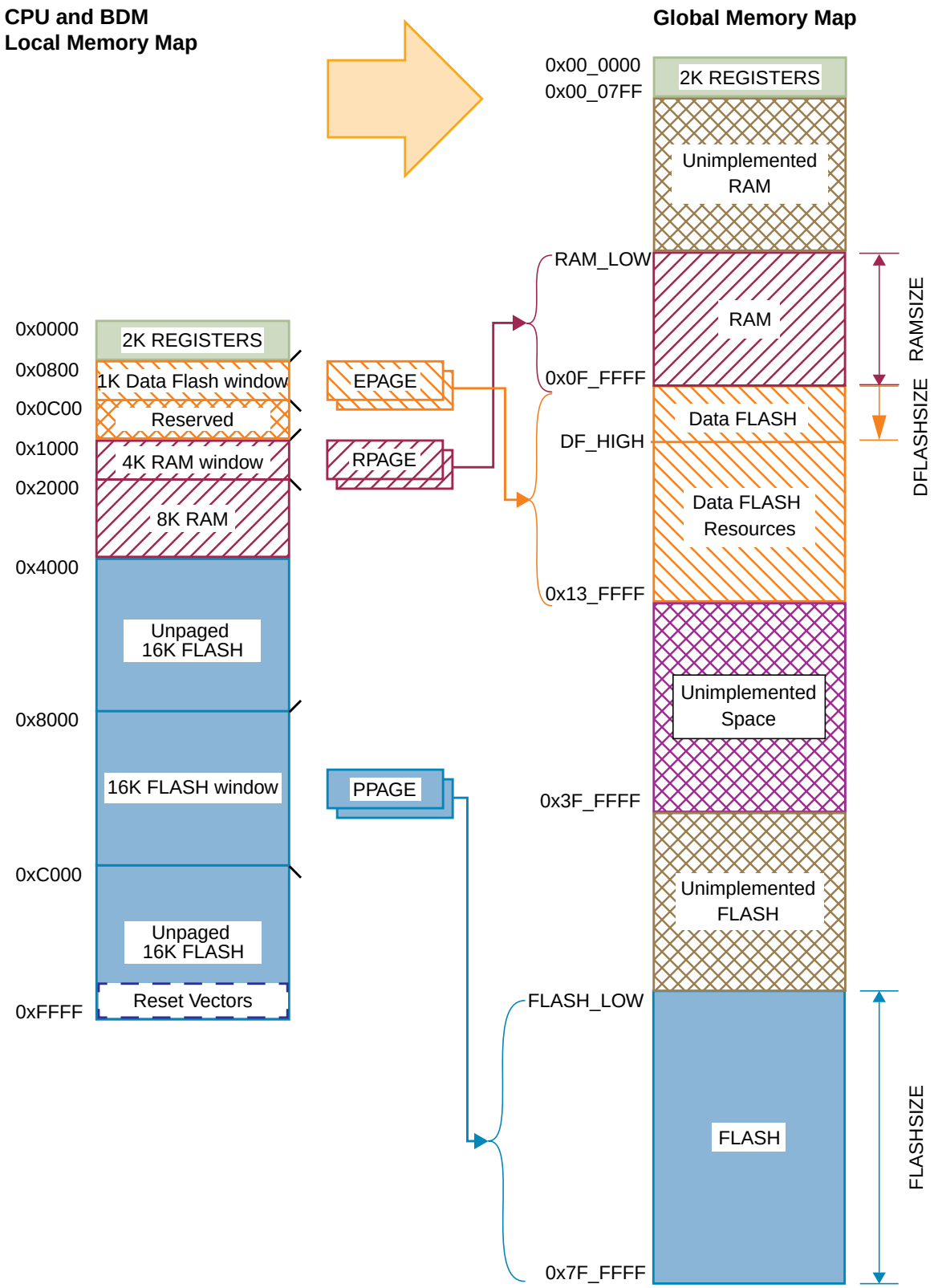

Figure 3-19. S12X CPU & BDM Global Address Mapping

3.4.3 Chip Bus Control

The MMC controls the address buses and the data buses that interface the S12X masters (CPU, BDM) with the rest of the system (master buses). In addition the MMC handles all CPU read data bus swapping operations. All internal resources are connected to specific target buses (see Figure 3-20).

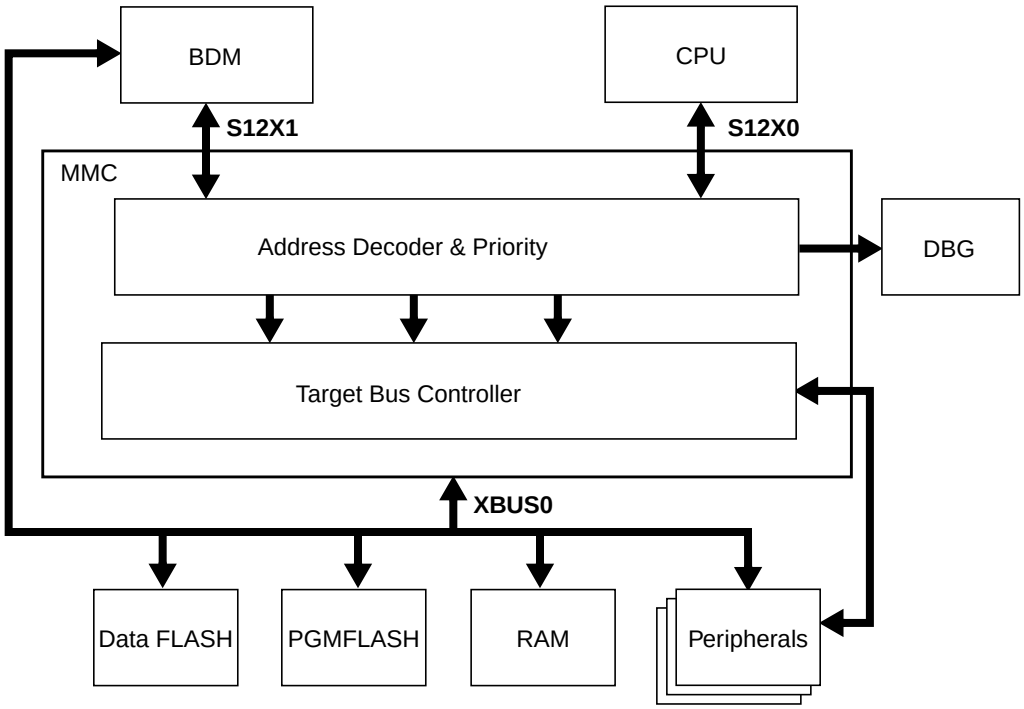

Figure 3-20. MMC Block Diagram

3.4.3.1 Master Bus Prioritization regarding access conflicts on Target Buses

The arbitration scheme allows only one master to be connected to a target at any given time. The following rules apply when prioritizing accesses from different masters to the same target bus:

- CPU always has priority over BDM .
- BDM has priority over CPU when its access is stalled for more than 128 cycles. In the later case the suspect master will be stalled after finishing the current operation and the BDM will gain access to the bus.

3.5 Initialization/Application Information

3.5.1 CALL and RTC Instructions

CALL and RTC instructions are uninterruptible CPU instructions that automate page switching in the program page window. The CALL instruction is similar to the JSR instruction, but the subroutine that is called can be located anywhere in the local address space or in any Flash or ROM page visible through the program page window. The CALL instruction calculates and stacks a return address, stacks the current PPAGE value and writes a new instruction-supplied value to the PPAGE register. The PPAGE value controls which of the 256 possible pages is visible through the 16KB program page window in the 64KB local CPU memory map. Execution then begins at the address of the called subroutine.

During the execution of the CALL instruction, the CPU performs the following steps:

1. Writes the current PPAGE value into an internal temporary register and writes the new instruction-supplied PPAGE value into the PPAGE register
2. Calculates the address of the next instruction after the CALL instruction (the return address) and pushes this 16-bit value onto the stack
3. Pushes the temporarily stored PPAGE value onto the stack
4. Calculates the effective address of the subroutine, refills the queue and begins execution at the new address

This sequence is uninterruptible. There is no need to inhibit interrupts during the CALL instruction execution. A CALL instruction can be performed from any address to any other address in the local CPU memory space.

The PPAGE value supplied by the instruction is part of the effective address of the CPU. For all addressing mode variations (except indexed-indirect modes) the new page value is provided by an immediate operand in the instruction. In indexed-indirect variations of the CALL instruction a pointer specifies memory locations where the new page value and the address of the called subroutine are stored. Using indirect addressing for both the new page value and the address within the page allows usage of values calculated at run time rather than immediate values that must be known at the time of assembly.

The RTC instruction terminates subroutines invoked by a CALL instruction. The RTC instruction unstacks the PPAGE value and the return address and refills the queue. Execution resumes with the next instruction after the CALL instruction.

During the execution of an RTC instruction the CPU performs the following steps:

1. Pulls the previously stored PPAGE value from the stack
2. Pulls the 16-bit return address from the stack and loads it into the PC
3. Writes the PPAGE value into the PPAGE register
4. Refills the queue and resumes execution at the return address

This sequence is uninterruptible. The RTC can be executed from anywhere in the local CPU memory space.

The CALL and RTC instructions behave like JSR and RTS instruction, they however require more execution cycles. Usage of JSR/RTS instructions is therefore recommended when possible and CALL/RTC instructions should only be used when needed. The JSR and RTS instructions can be used to access subroutines that are already present in the local CPU memory map (i.e. in the same page in the program memory page window for example). However calling a function located in a different page requires usage of the CALL instruction. The function must be terminated by the RTC instruction. Because the RTC instruction restores contents of the PPAGE register from the stack, functions terminated with the RTC instruction must be called using the CALL instruction even when the correct page is already present in the memory map. This is to make sure that the correct PPAGE value will be present on stack at the time of the RTC instruction execution.

Chapter 4
Interrupt (S12XINTV2)

Table 4-1. Revision History

Revision Number	Revision Date	Sections Affected	Description of Changes
V02.00	01 Jul 2005	4.1.2/4-152	Initial V2 release, added new features: - XGATE threads can be interrupted. - SYS instruction vector. - Access violation interrupt vectors.
V02.04	11 Jan 2007	4.3.2.2/4-157 4.3.2.4/4-158	- Added Notes for devices without XGATE module.
V02.05	20 Mar 2007	4.4.6/4-164	- Fixed priority definition for software exceptions.
V02.07	13 Dec 2011	4.5.3.1/4-166	- Re-worded for difference of Wake-up feature between STOP and WAIT modes.

4.1 Introduction

The XINT module decodes the priority of all system exception requests and provides the applicable vector for processing the exception to either the CPU or the XGATE module. The XINT module supports:

- I bit and X bit maskable interrupt requests
- One non-maskable unimplemented op-code trap
- One non-maskable software interrupt (SWI) or background debug mode request
- One non-maskable system call interrupt (SYS)
- Three non-maskable access violation interrupts
- One spurious interrupt vector request
- Three system reset vector requests

Each of the I bit maskable interrupt requests can be assigned to one of seven priority levels supporting a flexible priority scheme. For interrupt requests that are configured to be handled by the CPU, the priority scheme can be used to implement nested interrupt capability where interrupts from a lower level are automatically blocked if a higher level interrupt is being processed. Interrupt requests configured to be handled by the XGATE module can be nested one level deep.

NOTE

The HPRIO register and functionality of the original S12 interrupt module is no longer supported. It is superseded by the 7-level interrupt request priority scheme.

4.1.1 Glossary

The following terms and abbreviations are used in the document.

Table 4-2. Terminology

Term	Meaning
CCR	Condition Code Register (in the S12X CPU)
DMA	Direct Memory Access
INT	Interrupt
IPL	Interrupt Processing Level
ISR	Interrupt Service Routine
MCU	Micro-Controller Unit
XGATE	refers to the XGATE co-processor; XGATE is an optional feature
$\overline{\text{IRQ}}$	refers to the interrupt request associated with the $\overline{\text{IRQ}}$ pin
$\overline{\text{XIRQ}}$	refers to the interrupt request associated with the $\overline{\text{XIRQ}}$ pin

4.1.2 Features

- Interrupt vector base register (IVBR)
- One spurious interrupt vector (at address vector base[1] + 0x0010).
- One non-maskable system call interrupt vector request (at address vector base + 0x0012).
- Three non-maskable access violation interrupt vector requests (at address vector base + 0x0014–0x0018).
- 2–109 I bit maskable interrupt vector requests (at addresses vector base + 0x001A–0x00F2).
- Each I bit maskable interrupt request has a configurable priority level and can be configured to be handled by either the CPU or the XGATE module[2].
- I bit maskable interrupts can be nested, depending on their priority levels.
- One X bit maskable interrupt vector request (at address vector base + 0x00F4).
- One non-maskable software interrupt request (SWI) or background debug mode vector request (at address vector base + 0x00F6).
- One non-maskable unimplemented op-code trap (TRAP) vector (at address vector base + 0x00F8).
- Three system reset vectors (at addresses 0xFFFA–0xFFFE).
- Determines the highest priority XGATE and interrupt vector requests, drives the vector to the XGATE module or to the bus on CPU request, respectively.
- Wakes up the system from stop or wait mode when an appropriate interrupt request occurs or whenever $\overline{\text{XIRQ}}$ is asserted, even if X interrupt is masked.
- XGATE can wake up and execute code, even with the CPU remaining in stop or wait mode.

1. The vector base is a 16-bit address which is accumulated from the contents of the interrupt vector base register (IVBR, used as upper byte) and 0x00 (used as lower byte).
2. The $\overline{\text{IRQ}}$ interrupt can only be handled by the CPU

4.1.3 Modes of Operation

- Run mode

  This is the basic mode of operation.

- Wait mode

  In wait mode, the XINT module is frozen. It is however capable of either waking up the CPU if an interrupt occurs or waking up the XGATE if an XGATE request occurs. Please refer to Section 4.5.3, “Wake Up from Stop or Wait Mode” for details.

- Stop Mode

  In stop mode, the XINT module is frozen. It is however capable of either waking up the CPU if an interrupt occurs or waking up the XGATE if an XGATE request occurs. Please refer to Section 4.5.3, “Wake Up from Stop or Wait Mode” for details.

- Freeze mode (BDM active)

  In freeze mode (BDM active), the interrupt vector base register is overridden internally. Please refer to Section 4.3.2.1, “Interrupt Vector Base Register (IVBR)” for details.

4.1.4 Block Diagram

Figure 4-1 shows a block diagram of the XINT module.

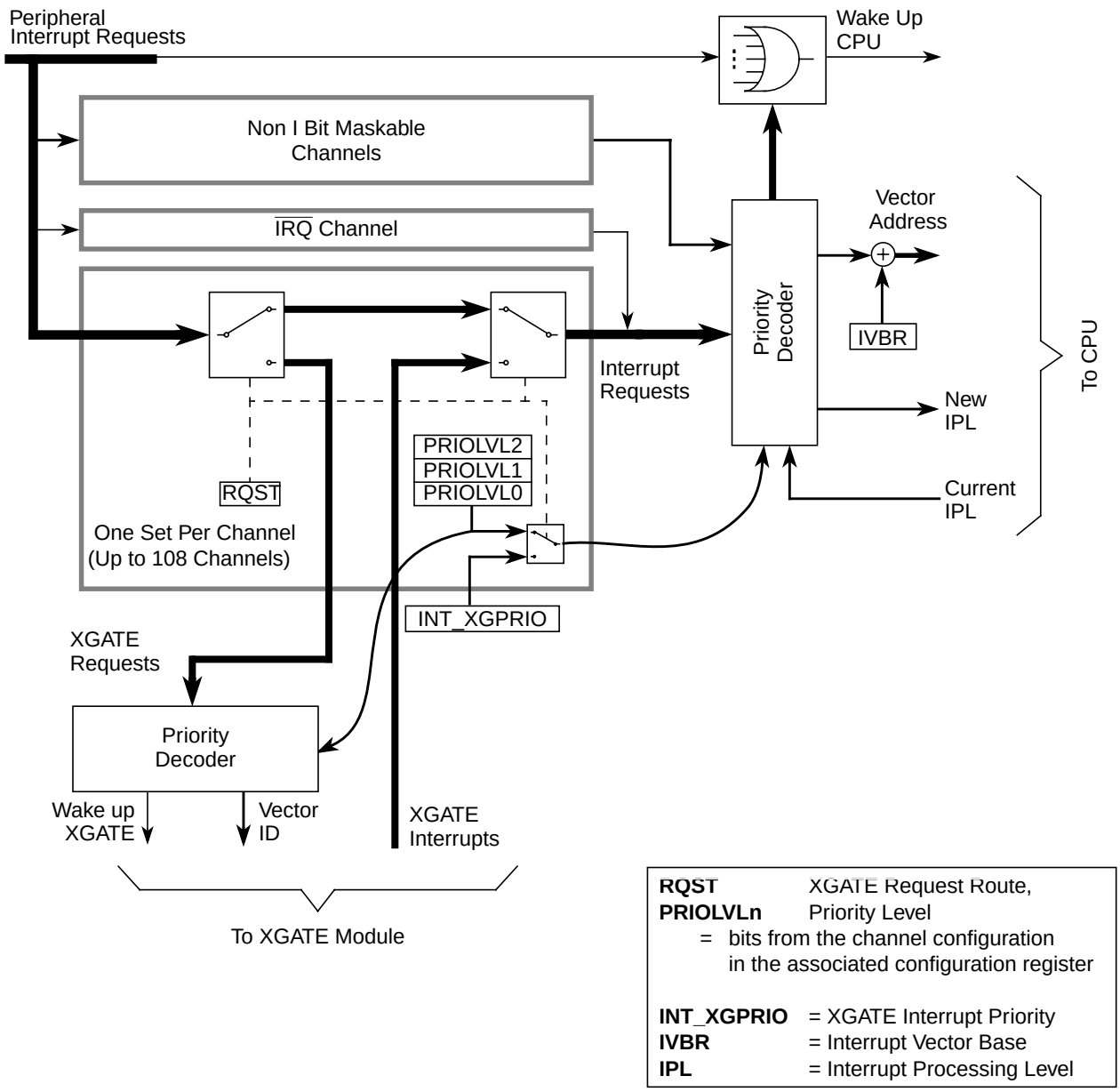

Figure 4-1. XINT Block Diagram

4.2 External Signal Description

The XINT module has no external signals.

4.3 Memory Map and Register Definition

This section provides a detailed description of all registers accessible in the XINT module.

4.3.1 Module Memory Map

Table 4-3 gives an overview over all XINT module registers.

Table 4-3. XINT Memory Map

Address	Use	Access
0x0120	RESERVED	—
0x0121	Interrupt Vector Base Register (IVBR)	R/W
0x0122–0x0125	RESERVED	—
0x0126	XGATE Interrupt Priority Configuration Register (INT_XGPRIO)	R/W
0x0127	Interrupt Request Configuration Address Register (INT_CFADDR)	R/W
0x0128	Interrupt Request Configuration Data Register 0 (INT_CFDATA0)	R/W
0x0129	Interrupt Request Configuration Data Register 1 (INT_CFDATA1)	R/W
0x012A	Interrupt Request Configuration Data Register 2 (INT_CFDATA2	R/W
0x012B	Interrupt Request Configuration Data Register 3 (INT_CFDATA3)	R/W
0x012C	Interrupt Request Configuration Data Register 4 (INT_CFDATA4)	R/W
0x012D	Interrupt Request Configuration Data Register 5 (INT_CFDATA5)	R/W
0x012E	Interrupt Request Configuration Data Register 6 (INT_CFDATA6)	R/W
0x012F	Interrupt Request Configuration Data Register 7 (INT_CFDATA7)	R/W

4.3.2 Register Descriptions

This section describes in address order all the XINT module registers and their individual bits.

Address	Register Name		Bit 7	6	5	4	3	2	1	Bit 0
0x0121	IVBR	R/W	IVB_ADDR[7:0]7							
0x0126	INT_XGPRIO	R	0	0	0	0	0	XILVL[2:0]		
		W								
0x0127	INT_CFADDR	R	INT_CFADDR[7:4]				0	0	0	0
		W								
0x0128	INT_CFDATA0	R	RQST	0	0	0	0	PRIOLVL[2:0]		
		W								
0x0129	INT_CFDATA1	R	RQST	0	0	0	0	PRIOLVL[2:0]		
		W								
0x012A	INT_CFDATA2	R	RQST	0	0	0	0	PRIOLVL[2:0]		
		W								
0x012B	INT_CFDATA3	R	RQST	0	0	0	0	PRIOLVL[2:0]		
		W								
0x012C	INT_CFDATA4	R	RQST	0	0	0	0	PRIOLVL[2:0]		
		W								
0x012D	INT_CFDATA5	R	RQST	0	0	0	0	PRIOLVL[2:0]		
		W								
0x012E	INT_CFDATA6	R	RQST	0	0	0	0	PRIOLVL[2:0]		
		W								
0x012F	INT_CFDATA7	R	RQST	0	0	0	0	PRIOLVL[2:0]		
		W								

= Unimplemented or Reserved

Figure 4-2. XINT Register Summary

4.3.2.1 Interrupt Vector Base Register (IVBR)

Address: 0x0121

	7	6	5	4	3	2	1	0
R W	IVB_ADDR[7:0]							
Reset	1	1	1	1	1	1	1	1

Figure 4-3. Interrupt Vector Base Register (IVBR)

Read: Anytime

Write: Anytime

Table 4-4. IVBR Field Descriptions

Field	Description
7–0 IVB_ADDR[7:0]	**Interrupt Vector Base Address Bits** — These bits represent the upper byte of all vector addresses. Out of reset these bits are set to 0xFF (i.e., vectors are located at 0xFF10–0xFFFE) to ensure compatibility to previous S12 microcontrollers. **Note:** A system reset will initialize the interrupt vector base register with “0xFF” before it is used to determine the reset vector address. Therefore, changing the IVBR has no effect on the location of the three reset vectors (0xFFFA–0xFFFE). **Note:** If the BDM is active (i.e., the CPU is in the process of executing BDM firmware code), the contents of IVBR are ignored and the upper byte of the vector address is fixed as “0xFF”.

4.3.2.2 XGATE Interrupt Priority Configuration Register (INT_XGPRIO)

Address: 0x0126

	7	6	5	4	3	2	1	0
R	0	0	0	0	0	XILVL[2:0]		
W								
Reset	0	0	0	0	0	0	0	1

= Unimplemented or Reserved

Figure 4-4. XGATE Interrupt Priority Configuration Register (INT_XGPRIO)

Read: Anytime

Write: Anytime

Table 4-5. INT_XGPRIO Field Descriptions

Field	Description
2–0 XILVL[2:0]	**XGATE Interrupt Priority Level** — The XILVL[2:0] bits configure the shared interrupt level of the XGATE interrupts coming from the XGATE module. Out of reset the priority is set to the lowest active level (“1”). **Note:** If the XGATE module is not available on the device, write accesses to this register are ignored and read accesses to this register will return all 0.

Table 4-6. XGATE Interrupt Priority Levels

Priority	XILVL2	XILVL1	XILVL0	Meaning
	0	0	0	Interrupt request is disabled
low	0	0	1	Priority level 1
	0	1	0	Priority level 2
	0	1	1	Priority level 3
	1	0	0	Priority level 4
	1	0	1	Priority level 5
	1	1	0	Priority level 6
high	1	1	1	Priority level 7

4.3.2.3 Interrupt Request Configuration Address Register (INT_CFADDR)

Address: 0x0127

	7	6	5	4	3	2	1	0
R	INT_CFADDR[7:4]				0	0	0	0
W								
Reset	0	0	0	1	0	0	0	0

= Unimplemented or Reserved

Figure 4-5. Interrupt Configuration Address Register (INT_CFADDR)

Read: Anytime

Write: Anytime

Table 4-7. INT_CFADDR Field Descriptions

Field	Description
7–4 INT_CFADDR[7:4]	**Interrupt Request Configuration Data Register Select Bits** — These bits determine which of the 128 configuration data registers are accessible in the 8 register window at INT_CFDATA0–7. The hexadecimal value written to this register corresponds to the upper nibble of the lower byte of the address of the interrupt vector, i.e., writing 0xE0 to this register selects the configuration data register block for the 8 interrupt vector requests starting with vector at address (vector base + 0x00E0) to be accessible as INT_CFDATA0–7. **Note:** Writing all 0s selects non-existing configuration registers. In this case write accesses to INT_CFDATA0–7 will be ignored and read accesses will return all 0.

4.3.2.4 Interrupt Request Configuration Data Registers (INT_CFDATA0–7)

The eight register window visible at addresses INT_CFDATA0–7 contains the configuration data for the block of eight interrupt requests (out of 128) selected by the interrupt configuration address register (INT_CFADDR) in ascending order. INT_CFDATA0 represents the interrupt configuration data register of the vector with the lowest address in this block, while INT_CFDATA7 represents the interrupt configuration data register of the vector with the highest address, respectively.

Address: 0x0128

	7	6	5	4	3	2	1	0
R	RQST	0	0	0	0	PRIOLVL[2:0]		
W								
Reset	0	0	0	0	0	0	0	1[1]

= Unimplemented or Reserved

Figure 4-6. Interrupt Request Configuration Data Register 0 (INT_CFDATA0)

1. Please refer to the notes following the PRIOLVL[2:0] description below.

Address: 0x0129

	7	6	5	4	3	2	1	0
R	RQST	0	0	0	0	PRIOLVL[2:0]		
W								
Reset	0	0	0	0	0	0	0	1[1]

= Unimplemented or Reserved

Figure 4-7. Interrupt Request Configuration Data Register 1 (INT_CFDATA1)

1. Please refer to the notes following the PRIOLVL[2:0] description below.

Address: 0x012A

	7	6	5	4	3	2	1	0
R	RQST	0	0	0	0	PRIOLVL[2:0]		
W								
Reset	0	0	0	0	0	0	0	1[1]

= Unimplemented or Reserved

Figure 4-8. Interrupt Request Configuration Data Register 2 (INT_CFDATA2)

1. Please refer to the notes following the PRIOLVL[2:0] description below.

Address: 0x012B

	7	6	5	4	3	2	1	0
R	RQST	0	0	0	0	PRIOLVL[2:0]		
W								
Reset	0	0	0	0	0	0	0	1[1]

= Unimplemented or Reserved

Figure 4-9. Interrupt Request Configuration Data Register 3 (INT_CFDATA3)

1. Please refer to the notes following the PRIOLVL[2:0] description below.

Address: 0x012C

	7	6	5	4	3	2	1	0
R	RQST	0	0	0	0	PRIOLVL[2:0]		
W								
Reset	0	0	0	0	0	0	0	1[1]

= Unimplemented or Reserved

Figure 4-10. Interrupt Request Configuration Data Register 4 (INT_CFDATA4)

1. Please refer to the notes following the PRIOLVL[2:0] description below.

Address: 0x012D

	7	6	5	4	3	2	1	0
R	RQST	0	0	0	0	PRIOLVL[2:0]		
W								
Reset	0	0	0	0	0	0	0	1[1]

= Unimplemented or Reserved

Figure 4-11. Interrupt Request Configuration Data Register 5 (INT_CFDATA5)

1. Please refer to the notes following the PRIOLVL[2:0] description below.

Address: 0x012E

	7	6	5	4	3	2	1	0
R	RQST	0	0	0	0	PRIOLVL[2:0]		
W								
Reset	0	0	0	0	0	0	0	1[1]

= Unimplemented or Reserved

Figure 4-12. Interrupt Request Configuration Data Register 6 (INT_CFDATA6)

1. Please refer to the notes following the PRIOLVL[2:0] description below.

Address: 0x012F

	7	6	5	4	3	2	1	0
R	RQST	0	0	0	0	PRIOLVL[2:0]		
W								
Reset	0	0	0	0	0	0	0	1[1]

= Unimplemented or Reserved

Figure 4-13. Interrupt Request Configuration Data Register 7 (INT_CFDATA7)

1. Please refer to the notes following the PRIOLVL[2:0] description below.

Read: Anytime

Write: Anytime

Table 4-8. INT_CFDATA0–7 Field Descriptions

Field	Description
7 RQST	**XGATE Request Enable** — This bit determines if the associated interrupt request is handled by the CPU or by the XGATE module. 0 Interrupt request is handled by the CPU 1 Interrupt request is handled by the XGATE module **Note:** The $\overline{IRQ}$ interrupt cannot be handled by the XGATE module. For this reason, the configuration register for vector (vector base + 0x00F2) = $\overline{IRQ}$ vector address) does not contain a RQST bit. Writing a 1 to the location of the RQST bit in this register will be ignored and a read access will return 0. **Note:** If the XGATE module is not available on the device, writing a 1 to the location of the RQST bit in this register will be ignored and a read access will return 0.
2–0 PRIOLVL[2:0]	**Interrupt Request Priority Level Bits** — The PRIOLVL[2:0] bits configure the interrupt request priority level of the associated interrupt request. Out of reset all interrupt requests are enabled at the lowest active level (“1”) to provide backwards compatibility with previous S12 interrupt controllers. Please also refer to Table 4-9 for available interrupt request priority levels. **Note:** Write accesses to configuration data registers of unused interrupt channels will be ignored and read accesses will return all 0. For information about what interrupt channels are used in a specific MCU, please refer to the Device Reference Manual of that MCU. **Note:** When vectors (vector base + 0x00F0–0x00FE) are selected by writing 0xF0 to INT_CFADDR, writes to INT_CFDATA2–7 (0x00F4–0x00FE) will be ignored and read accesses will return all 0s. The corresponding vectors do not have configuration data registers associated with them. **Note:** When vectors (vector base + 0x0010–0x001E) are selected by writing 0x10 to INT_CFADDR, writes to INT_CFDATA1–INT_CFDATA4 (0x0012–0x0018) will be ignored and read accesses will return all 0s. The corresponding vectors do not have configuration data registers associated with them. **Note:** Write accesses to the configuration register for the spurious interrupt vector request (vector base + 0x0010) will be ignored and read accesses will return 0x07 (request is handled by the CPU, PRIOLVL = 7).

Table 4-9. Interrupt Priority Levels

Priority	PRIOLVL2	PRIOLVL1	PRIOLVL0	Meaning
	0	0	0	Interrupt request is disabled
low	0	0	1	Priority level 1
	0	1	0	Priority level 2
	0	1	1	Priority level 3
	1	0	0	Priority level 4
	1	0	1	Priority level 5
	1	1	0	Priority level 6
high	1	1	1	Priority level 7

4.4 Functional Description

The XINT module processes all exception requests to be serviced by the CPU module. These exceptions include interrupt vector requests and reset vector requests. Each of these exception types and their overall priority level is discussed in the subsections below.

4.4.1 S12X Exception Requests

The CPU handles both reset requests and interrupt requests. The XINT module contains registers to configure the priority level of each I bit maskable interrupt request which can be used to implement an interrupt priority scheme. This also includes the possibility to nest interrupt requests. A priority decoder is used to evaluate the priority of a pending interrupt request.

4.4.2 Interrupt Prioritization

After system reset all interrupt requests with a vector address lower than or equal to (vector base + 0x00F2) are enabled, are set up to be handled by the CPU and have a pre-configured priority level of 1. Exceptions to this rule are the non-maskable interrupt requests and the spurious interrupt vector request at (vector base + 0x0010) which cannot be disabled, are always handled by the CPU and have a fixed priority levels. A priority level of 0 effectively disables the associated I bit maskable interrupt request.

If more than one interrupt request is configured to the same interrupt priority level the interrupt request with the higher vector address wins the prioritization.

The following conditions must be met for an I bit maskable interrupt request to be processed.

1. The local interrupt enabled bit in the peripheral module must be set.
2. The setup in the configuration register associated with the interrupt request channel must meet the following conditions:
   a) The XGATE request enable bit must be 0 to have the CPU handle the interrupt request.
   b) The priority level must be set to non zero.
   c) The priority level must be greater than the current interrupt processing level in the condition code register (CCR) of the CPU (PRIOLVL[2:0] > IPL[2:0]).
3. The I bit in the condition code register (CCR) of the CPU must be cleared.
4. There is no access violation interrupt request pending.
5. There is no SYS, SWI, BDM, TRAP, or $\overline{\text{XIRQ}}$ request pending.

NOTE

All non I bit maskable interrupt requests always have higher priority than I bit maskable interrupt requests. If an I bit maskable interrupt request is interrupted by a non I bit maskable interrupt request, the currently active interrupt processing level (IPL) remains unaffected. It is possible to nest non I bit maskable interrupt requests, e.g., by nesting SWI or TRAP calls.

4.4.2.1 Interrupt Priority Stack

The current interrupt processing level (IPL) is stored in the condition code register (CCR) of the CPU. This way the current IPL is automatically pushed to the stack by the standard interrupt stacking procedure. The new IPL is copied to the CCR from the priority level of the highest priority active interrupt request channel which is configured to be handled by the CPU. The copying takes place when the interrupt vector is fetched. The previous IPL is automatically restored by executing the RTI instruction.

4.4.3 XGATE Requests

If the XGATE module is implemented on the device, the XINT module is also used to process all exception requests to be serviced by the XGATE module. The overall priority level of those exceptions is discussed in the subsections below.

4.4.3.1 XGATE Request Prioritization

An interrupt request channel is configured to be handled by the XGATE module, if the RQST bit of the associated configuration register is set to 1 (please refer to Section 4.3.2.4, "Interrupt Request Configuration Data Registers (INT_CFDATA0–7)"). The priority level configuration (PRIOLVL) for this channel becomes the XGATE priority which will be used to determine the highest priority XGATE request to be serviced next by the XGATE module. Additionally, XGATE interrupts may be raised by the XGATE module by setting one or more of the XGATE channel interrupt flags (by using the SIF instruction). This will result in an CPU interrupt with vector address vector base + (2 * channel ID number), where the channel ID number corresponds to the highest set channel interrupt flag, if the XGIE and channel RQST bits are set.

The shared interrupt priority for the XGATE interrupt requests is taken from the XGATE interrupt priority configuration register (please refer to Section 4.3.2.2, "XGATE Interrupt Priority Configuration Register (INT_XGPRIO)"). If more than one XGATE interrupt request channel becomes active at the same time, the channel with the highest vector address wins the prioritization.

4.4.4 Priority Decoders

The XINT module contains priority decoders to determine the priority for all interrupt requests pending for the respective target.

There are two priority decoders, one for each interrupt request target, CPU or XGATE. The function of both priority decoders is basically the same with one exception: the priority decoder for the XGATE module does not take the current XGATE thread processing level into account. Instead, XGATE requests are handed to the XGATE module including a 1-bit priority identifier. The XGATE module uses this additional information to decide if the new request can interrupt a currently running thread. The 1-bit priority identifier corresponds to the most significant bit of the priority level configuration of the requesting channel. This means that XGATE requests with priority levels 4, 5, 6 or 7 can interrupt running XGATE threads with priority levels 1, 2 and 3.

A CPU interrupt vector is not supplied until the CPU requests it. Therefore, it is possible that a higher priority interrupt request could override the original exception which caused the CPU to request the vector. In this case, the CPU will receive the highest priority vector and the system will process this exception instead of the original request.

If the interrupt source is unknown (for example, in the case where an interrupt request becomes inactive after the interrupt has been recognized, but prior to the vector request), the vector address supplied to the CPU will default to that of the spurious interrupt vector.

NOTE

Care must be taken to ensure that all exception requests remain active until the system begins execution of the applicable service routine; otherwise, the exception request may not get processed at all or the result may be a spurious interrupt request (vector at address (vector base + 0x0010)).

4.4.5 Reset Exception Requests

The XINT module supports three system reset exception request types (for details please refer to the Clock and Reset Generator module (CRG)):

1. Pin reset, power-on reset, low-voltage reset, or illegal address reset
2. Clock monitor reset request
3. COP watchdog reset request

4.4.6 Exception Priority

The priority (from highest to lowest) and address of all exception vectors issued by the XINT module upon request by the CPU is shown in Table 4-10. Generally, all non-maskable interrupts have higher priorities than maskable interrupts. Please note that between the three software interrupts (Unimplemented op-code trap request, SWI/BGND request, SYS request) there is no real priority defined because they cannot occur simultaneously (the S12XCPU executes one instruction at a time).

Table 4-10. Exception Vector Map and Priority

Vector Address[1]	Source
0xFFFE	Pin reset, power-on reset, low-voltage reset, illegal address reset
0xFFFC	Clock monitor reset
0xFFFA	COP watchdog reset
(Vector base + 0x00F8)	Unimplemented op-code trap
(Vector base + 0x00F6)	Software interrupt instruction (SWI) or BDM vector request
(Vector base + 0x0012)	System call interrupt instruction (SYS)
(Vector base + 0x0018)	(reserved for future use)
(Vector base + 0x0016)	XGATE Access violation interrupt request[2]
(Vector base + 0x0014)	CPU Access violation interrupt request[3]
(Vector base + 0x00F4)	$\overline{\text{XIRQ}}$ interrupt request
(Vector base + 0x00F2)	$\overline{\text{IRQ}}$ interrupt request
(Vector base + 0x00F0–0x001A)	Device specific I bit maskable interrupt sources (priority determined by the associated configuration registers, in descending order)
(Vector base + 0x0010)	Spurious interrupt

1. 16 bits vector address based
2. only implemented if device features both a Memory Protection Unit (MPU) and an XGATE co-processor
3. only implemented if device features a Memory Protection Unit (MPU)

4.5 Initialization/Application Information

4.5.1 Initialization

After system reset, software should:

- Initialize the interrupt vector base register if the interrupt vector table is not located at the default location (0xFF10–0xFFF9).
- Initialize the interrupt processing level configuration data registers (INT_CFADDR, INT_CFDATA0–7) for all interrupt vector requests with the desired priority levels and the request target (CPU or XGATE module). It might be a good idea to disable unused interrupt requests.
- If the XGATE module is used, setup the XGATE interrupt priority register (INT_XGPRIO) and configure the XGATE module (please refer the XGATE Block Guide for details).
- Enable I maskable interrupts by clearing the I bit in the CCR.
- Enable the X maskable interrupt by clearing the X bit in the CCR (if required).

4.5.2 Interrupt Nesting

The interrupt request priority level scheme makes it possible to implement priority based interrupt request nesting for the I bit maskable interrupt requests handled by the CPU.

- I bit maskable interrupt requests can be interrupted by an interrupt request with a higher priority, so that there can be up to seven nested I bit maskable interrupt requests at a time (refer to Figure 4-14 for an example using up to three nested interrupt requests).

I bit maskable interrupt requests cannot be interrupted by other I bit maskable interrupt requests per default. In order to make an interrupt service routine (ISR) interruptible, the ISR must explicitly clear the I bit in the CCR (CLI). After clearing the I bit, I bit maskable interrupt requests with higher priority can interrupt the current ISR.

An ISR of an interruptible I bit maskable interrupt request could basically look like this:

- Service interrupt, e.g., clear interrupt flags, copy data, etc.
- Clear I bit in the CCR by executing the instruction CLI (thus allowing interrupt requests with higher priority)
- Process data
- Return from interrupt by executing the instruction RTI

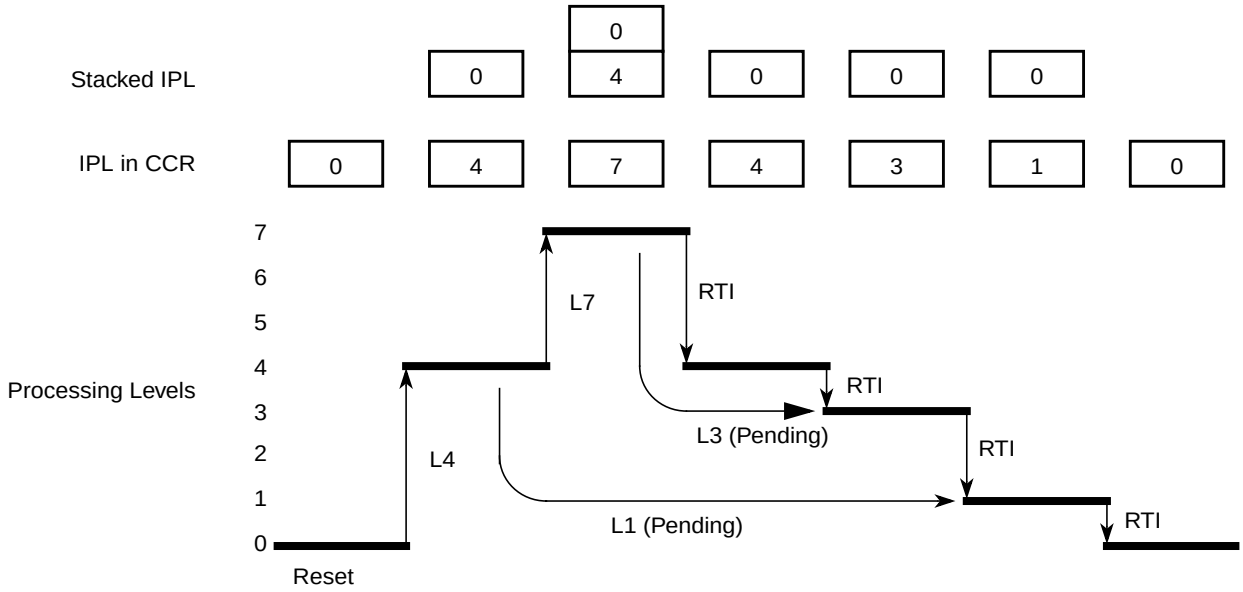

Figure 4-14. Interrupt Processing Example

4.5.3 Wake Up from Stop or Wait Mode

4.5.3.1 CPU Wake Up from Stop or Wait Mode

Only I bit maskable interrupt requests which are configured to be handled by the CPU are capable of waking the MCU from wait mode.

Since bus and core clocks are disabled in stop mode, only interrupt requests that can be generated without these clocks can wake the MCU from stop mode. These are listed in the device overview interrupt vector table. Only I bit maskable interrupt requests which are configured to be handled by the CPU are capable of waking the MCU from stop mode.

To determine whether an I bit maskable interrupt is qualified to wake up the CPU or not, the same settings as in normal run mode are applied during stop or wait mode:

- If the I bit in the CCR is set, all I bit maskable interrupts are masked from waking up the MCU.
- An I bit maskable interrupt is ignored if it is configured to a priority level below or equal to the current IPL in CCR.
- I bit maskable interrupt requests which are configured to be handled by the XGATE module are not capable of waking up the CPU.

The X bit maskable interrupt request can wake up the MCU from stop or wait mode at anytime, even if the X bit in CCR is set. If the X bit maskable interrupt request is used to wake-up the MCU with the X bit in the CCR set, the associated ISR is not called. The CPU then resumes program execution with the instruction following the WAI or STOP instruction. This features works following the same rules like any interrupt request, i.e. care must be taken that the X interrupt request used for wake-up remains active at least until the system begins execution of the instruction following the WAI or STOP instruction; otherwise, wake-up may not occur.

4.5.3.2 XGATE Wake Up from Stop or Wait Mode

Interrupt request channels which are configured to be handled by the XGATE module are capable of waking up the XGATE module. Interrupt request channels handled by the XGATE module do not affect the state of the CPU.

Chapter 5
Background Debug Module (S12XBDMV2)

Table 5-1. Revision History

Revision Number	Revision Date	Sections Affected	Description of Changes
V02.00	07 Mar 2006		- First version of S12XBDMV2
V02.01	14 May 2008		- Introduced standardized Revision History Table
V02.02	12 Sep 2012		- Minor formatting corrections

5.1 Introduction

This section describes the functionality of the background debug module (BDM) sub-block of the HCS12X core platform.

The background debug module (BDM) sub-block is a single-wire, background debug system implemented in on-chip hardware for minimal CPU intervention. All interfacing with the BDM is done via the BKGD pin.

The BDM has enhanced capability for maintaining synchronization between the target and host while allowing more flexibility in clock rates. This includes a sync signal to determine the communication rate and a handshake signal to indicate when an operation is complete. The system is backwards compatible to the BDM of the S12 family with the following exceptions:

- TAGGO command no longer supported by BDM
- External instruction tagging feature now part of DBG module
- BDM register map and register content extended/modified
- Global page access functionality
- Enabled but not active out of reset in emulation modes (if modes available)
- CLKSW bit set out of reset in emulation modes (if modes available).
- Family ID readable from firmware ROM at global address 0x7FFF0F (value for HCS12X devices is 0xC1)

5.1.1 Features

The BDM includes these distinctive features:

- Single-wire communication with host development system
- Enhanced capability for allowing more flexibility in clock rates
- SYNC command to determine communication rate
- GO_UNTIL command

- Hardware handshake protocol to increase the performance of the serial communication
- Active out of reset in special single chip mode
- Nine hardware commands using free cycles, if available, for minimal CPU intervention
- Hardware commands not requiring active BDM
- 14 firmware commands execute from the standard BDM firmware lookup table
- Software control of BDM operation during wait mode
- Software selectable clocks
- Global page access functionality
- Enabled but not active out of reset in emulation modes (if modes available)
- CLKSW bit set out of reset in emulation modes (if modes available).
- When secured, hardware commands are allowed to access the register space in special single chip mode, if the non-volatile memory erase test fail.
- Family ID readable from firmware ROM at global address 0x7FFF0F (value for HCS12X devices is 0xC1)
- BDM hardware commands are operational until system stop mode is entered (all bus masters are in stop mode)

5.1.2 Modes of Operation

BDM is available in all operating modes but must be enabled before firmware commands are executed. Some systems may have a control bit that allows suspending thefunction during background debug mode.

5.1.2.1 Regular Run Modes

All of these operations refer to the part in run mode and not being secured. The BDM does not provide controls to conserve power during run mode.

- Normal modes

  General operation of the BDM is available and operates the same in all normal modes.
- Special single chip mode

  In special single chip mode, background operation is enabled and active out of reset. This allows programming a system with blank memory.
- Emulation modes (if modes available)

  In emulation mode, background operation is enabled but not active out of reset. This allows debugging and programming a system in this mode more easily.

5.1.2.2 Secure Mode Operation

If the device is in secure mode, the operation of the BDM is reduced to a small subset of its regular run mode operation. Secure operation prevents BDM and CPU accesses to non-volatile memory (Flash and/or EEPROM) other than allowing erasure. For more information please see Section 5.4.1, “Security”.

5.1.2.3 Low-Power Modes

The BDM can be used until all bus masters (e.g., CPU or XGATE or others depending on which masters are available on the SOC) are in stop mode. When CPU is in a low power mode (wait or stop mode) all BDM firmware commands as well as the hardware BACKGROUND command can not be used respectively are ignored. In this case the CPU can not enter BDM active mode, and only hardware read and write commands are available. Also the CPU can not enter a low power mode during BDM active mode.

If all bus masters are in stop mode, the BDM clocks are stopped as well. When BDM clocks are disabled and one of the bus masters exits from stop mode the BDM clocks will restart and BDM will have a soft reset (clearing the instruction register, any command in progress and disable the ACK function). The BDM is now ready to receive a new command.

5.1.3 Block Diagram

A block diagram of the BDM is shown in Figure 5-1.

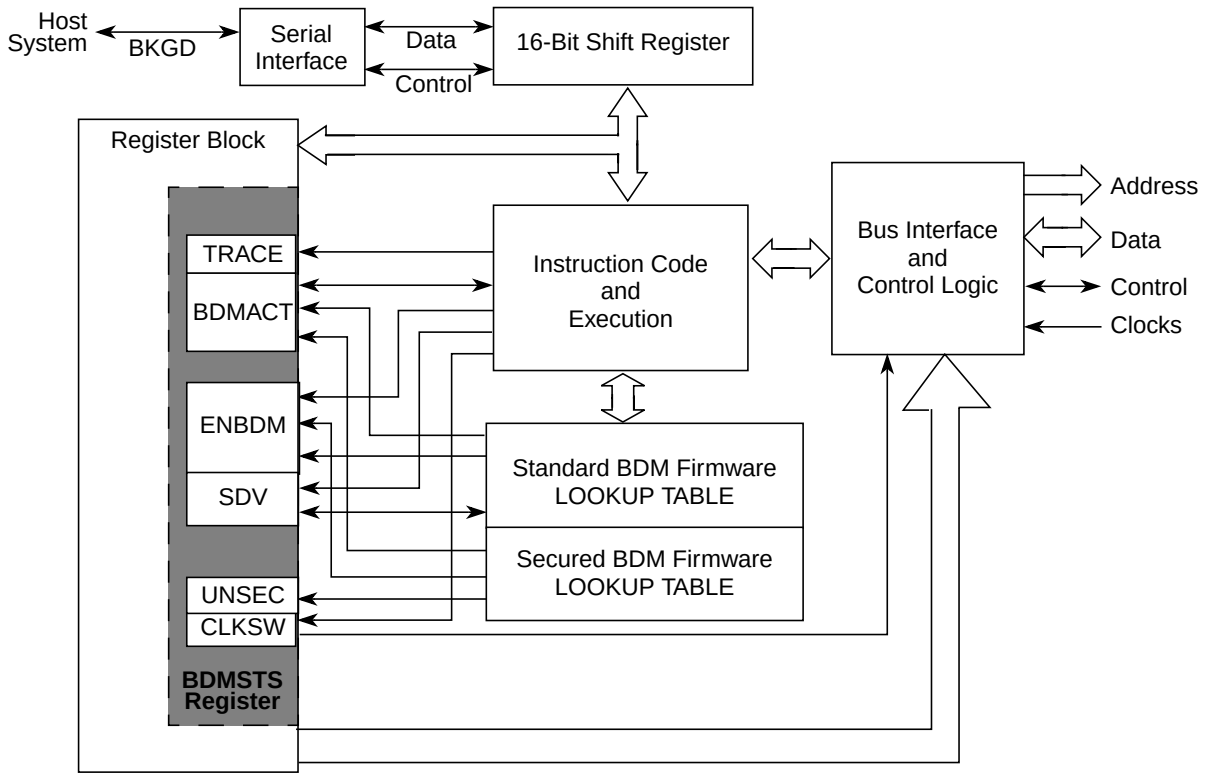

Figure 5-1. BDM Block Diagram

5.2 External Signal Description

A single-wire interface pin called the background debug interface (BKGD) pin is used to communicate with the BDM system. During reset, this pin is a mode select input which selects between normal and special modes of operation. After reset, this pin becomes the dedicated serial interface pin for the background debug mode.

5.3 Memory Map and Register Definition

5.3.1 Module Memory Map

Table 5-2 shows the BDM memory map when BDM is active.

Table 5-2. BDM Memory Map

Global Address	Module	Size (Bytes)
0x7FFF00–0x7FFF0B	BDM registers	12
0x7FFF0C–0x7FFF0E	BDM firmware ROM	3
0x7FFF0F	Family ID (part of BDM firmware ROM)	1
0x7FFF10–0x7FFFFF	BDM firmware ROM	240

5.3.2 Register Descriptions

A summary of the registers associated with the BDM is shown in Figure 5-2. Registers are accessed by host-driven communications to the BDM hardware using READ_BD and WRITE_BD commands.

Global Address	Register Name		Bit 7	6	5	4	3	2	1	Bit 0
0x7FFF00	Reserved	R	X	X	X	X	X	X	0	0
		W								
0x7FFF01	BDMSTS	R	ENBDM	BDMACT	0	SDV	TRACE	CLKSW	UNSEC	0
		W								
0x7FFF02	Reserved	R	X	X	X	X	X	X	X	X
		W								
0x7FFF03	Reserved	R	X	X	X	X	X	X	X	X
		W								
0x7FFF04	Reserved	R	X	X	X	X	X	X	X	X
		W								
0x7FFF05	Reserved	R	X	X	X	X	X	X	X	X
		W								
0x7FFF06	BDMCCRL	R/W	CCR7	CCR6	CCR5	CCR4	CCR3	CCR2	CCR1	CCR0

= Unimplemented, Reserved

= Implemented (do not alter)

X = Indeterminate

0 = Always read zero

Figure 5-2. BDM Register Summary

Global Address	Register Name		Bit 7	6	5	4	3	2	1	Bit 0
0x7FFF07	BDMCCRH	R	0	0	0	0	0	CCR10	CCR9	CCR8
		W								
0x7FFF08	BDMGPR	R/W	BGAE	BGP6	BGP5	BGP4	BGP3	BGP2	BGP1	BGP0
0x7FFF09	Reserved	R	0	0	0	0	0	0	0	0
		W								
0x7FFF0A	Reserved	R	0	0	0	0	0	0	0	0
		W								
0x7FFF0B	Reserved	R	0	0	0	0	0	0	0	0
		W								

= Unimplemented, Reserved = Implemented (do not alter)

X = Indeterminate 0 = Always read zero

Figure 5-2. BDM Register Summary (continued)

5.3.2.1 BDM Status Register (BDMSTS)

Register Global Address 0x7FFF01

	7	6	5	4	3	2	1	0
R	ENBDM	BDMACT	0	SDV	TRACE	CLKSW	UNSEC	0
W								
Reset								
Special Single-Chip Mode	0[1]	1	0	0	0	0	0[3]	0
Emulation Modes (if modes available)	1	0	0	0	0	1[2]	0	0
All Other Modes	0	0	0	0	0	0	0	0

= Unimplemented, Reserved = Implemented (do not alter)

0 = Always read zero

[1] ENBDM is read as 1 by a debugging environment in special single chip mode when the device is not secured or secured but fully erased (non-volatile memory). This is because the ENBDM bit is set by the standard firmware before a BDM command can be fully transmitted and executed.

[2] CLKSW is read as 1 by a debugging environment in emulation modes when the device is not secured and read as 0 when secured if emulation modes available.

[3] UNSEC is read as 1 by a debugging environment in special single chip mode when the device is secured and fully erased, else it is 0 and can only be read if not secure (see also bit description).

Figure 5-3. BDM Status Register (BDMSTS)

Read: All modes through BDM operation when not secured

Write: All modes through BDM operation when not secured, but subject to the following:

— ENBDM should only be set via a BDM hardware command if the BDM firmware commands are needed. (This does not apply in special single chip and emulation modes).

— BDMACT can only be set by BDM hardware upon entry into BDM. It can only be cleared by the standard BDM firmware lookup table upon exit from BDM active mode.

— CLKSW can only be written via BDM hardware WRITE_BD commands.

— All other bits, while writable via BDM hardware or standard BDM firmware write commands, should only be altered by the BDM hardware or standard firmware lookup table as part of BDM command execution.

Table 5-3. BDMSTS Field Descriptions

Field	Description
7 ENBDM	**Enable BDM** — This bit controls whether the BDM is enabled or disabled. When enabled, BDM can be made active to allow firmware commands to be executed. When disabled, BDM cannot be made active but BDM hardware commands are still allowed. 0 BDM disabled 1 BDM enabled **Note:** ENBDM is set by the firmware out of reset in special single chip mode. In emulation modes (if modes available) the ENBDM bit is set by BDM hardware out of reset. In special single chip mode with the device secured, this bit will not be set by the firmware until after the non-volatile memory erase verify tests are complete. In emulation modes (if modes available) with the device secured, the BDM operations are blocked.
6 BDMACT	**BDM Active Status** — This bit becomes set upon entering BDM. The standard BDM firmware lookup table is then enabled and put into the memory map. BDMACT is cleared by a carefully timed store instruction in the standard BDM firmware as part of the exit sequence to return to user code and remove the BDM memory from the map. 0 BDM not active 1 BDM active
4 SDV	**Shift Data Valid** — This bit is set and cleared by the BDM hardware. It is set after data has been transmitted as part of a firmware or hardware read command or after data has been received as part of a firmware or hardware write command. It is cleared when the next BDM command has been received or BDM is exited. SDV is used by the standard BDM firmware to control program flow execution. 0 Data phase of command not complete 1 Data phase of command is complete
3 TRACE	**TRACE1 BDM Firmware Command is Being Executed** — This bit gets set when a BDM TRACE1 firmware command is first recognized. It will stay set until BDM firmware is exited by one of the following BDM commands: GO or GO_UNTIL. 0 TRACE1 command is not being executed 1 TRACE1 command is being executed

Table 5-3. BDMSTS Field Descriptions (continued)

Field	Description
2 CLKSW	**Clock Switch** — The CLKSW bit controls which clock the BDM operates with. It is only writable from a hardware BDM command. A minimum delay of 150 cycles at the clock speed that is active during the data portion of the command send to change the clock source should occur before the next command can be send. The delay should be obtained no matter which bit is modified to effectively change the clock source (either PLLSEL bit or CLKSW bit). This guarantees that the start of the next BDM command uses the new clock for timing subsequent BDM communications. Table 5-4 shows the resulting BDM clock source based on the CLKSW and the PLLSEL (PLL select in the CRG module, the bit is part of the CLKSEL register) bits. **Note:** The BDM alternate clock source can only be selected when CLKSW = 0 and PLLSEL = 1. The BDM serial interface is now fully synchronized to the alternate clock source, when enabled. This eliminates frequency restriction on the alternate clock which was required on previous versions. Refer to the device specification to determine which clock connects to the alternate clock source input. **Note:** If the acknowledge function is turned on, changing the CLKSW bit will cause the ACK to be at the new rate for the write command which changes it. **Note:** In emulation modes (if modes available), the CLKSW bit will be set out of RESET.
1 UNSEC	**Unsecure** — If the device is secured this bit is only writable in special single chip mode from the BDM secure firmware. It is in a zero state as secure mode is entered so that the secure BDM firmware lookup table is enabled and put into the memory map overlapping the standard BDM firmware lookup table. The secure BDM firmware lookup table verifies that the non-volatile memories (e.g. on-chip EEPROM and/or Flash EEPROM) are erased. This being the case, the UNSEC bit is set and the BDM program jumps to the start of the standard BDM firmware lookup table and the secure BDM firmware lookup table is turned off. If the erase test fails, the UNSEC bit will not be asserted. 0 System is in a secured mode. 1 System is in a unsecured mode. **Note:** When UNSEC is set, security is off and the user can change the state of the secure bits in the on-chip Flash EEPROM. Note that if the user does not change the state of the bits to “unsecured” mode, the system will be secured again when it is next taken out of reset.After reset this bit has no meaning or effect when the security byte in the Flash EEPROM is configured for unsecure mode.

Table 5-4. BDM Clock Sources

PLLSEL	CLKSW	BDMCLK
0	0	Bus clock dependent on oscillator
0	1	Bus clock dependent on oscillator
1	0	Alternate clock (refer to the device specification to determine the alternate clock source)
1	1	Bus clock dependent on the PLL

5.3.2.2 BDM CCR LOW Holding Register (BDMCCRL)

Register Global Address 0x7FFF06

	7	6	5	4	3	2	1	0
R W	CCR7	CCR6	CCR5	CCR4	CCR3	CCR2	CCR1	CCR0
Reset								
Special Single-Chip Mode	1	1	0	0	1	0	0	0
All Other Modes	0	0	0	0	0	0	0	0

Figure 5-4. BDM CCR LOW Holding Register (BDMCCRL)

Read: All modes through BDM operation when not secured

Write: All modes through BDM operation when not secured

NOTE

When BDM is made active, the CPU stores the content of its CCR_L register in the BDMCCRL register. However, out of special single-chip reset, the BDMCCRL is set to 0xD8 and not 0xD0 which is the reset value of the CCR_L register in this CPU mode. Out of reset in all other modes the BDMCCRL register is read zero.

When entering background debug mode, the BDM CCR LOW holding register is used to save the low byte of the condition code register of the user's program. It is also used for temporary storage in the standard BDM firmware mode. The BDM CCR LOW holding register can be written to modify the CCR value.

5.3.2.3 BDM CCR HIGH Holding Register (BDMCCRH)

Register Global Address 0x7FFF07

	7	6	5	4	3	2	1	0
R	0	0	0	0	0	CCR10	CCR9	CCR8
W								
Reset	0	0	0	0	0	0	0	0

= Unimplemented or Reserved

Figure 5-5. BDM CCR HIGH Holding Register (BDMCCRH)

Read: All modes through BDM operation when not secured

Write: All modes through BDM operation when not secured

When entering background debug mode, the BDM CCR HIGH holding register is used to save the high byte of the condition code register of the user's program. The BDM CCR HIGH holding register can be written to modify the CCR value.

5.3.2.4 BDM Global Page Index Register (BDMGPR)

Register Global Address 0x7FFF08

	7	6	5	4	3	2	1	0
R W	BGAE	BGP6	BGP5	BGP4	BGP3	BGP2	BGP1	BGP0
Reset	0	0	0	0	0	0	0	0

Figure 5-6. BDM Global Page Register (BDMGPR)

Read: All modes through BDM operation when not secured

Write: All modes through BDM operation when not secured

Table 5-5. BDMGPR Field Descriptions

Field	Description
7 BGAE	**BDM Global Page Access Enable Bit** — BGAE enables global page access for BDM hardware and firmware read/write instructions The BDM hardware commands used to access the BDM registers (READ_BD_ and WRITE_BD_) can not be used for global accesses even if the BGAE bit is set. 0 BDM Global Access disabled 1 BDM Global Access enabled
6–0 BGP[6:0]	**BDM Global Page Index Bits 6–0** — These bits define the extended address bits from 22 to 16. For more detailed information regarding the global page window scheme, please refer to the S12X_MMC Block Guide.

5.3.3 Family ID Assignment

The family ID is a 8-bit value located in the firmware ROM (at global address: 0x7FFF0F). The read-only value is a unique family ID which is 0xC1 for S12X devices.

5.4 Functional Description

The BDM receives and executes commands from a host via a single wire serial interface. There are two types of BDM commands: hardware and firmware commands.

Hardware commands are used to read and write target system memory locations and to enter active background debug mode, see Section 5.4.3, “BDM Hardware Commands”. Target system memory includes all memory that is accessible by the CPU.

Firmware commands are used to read and write CPU resources and to exit from active background debug mode, see Section 5.4.4, “Standard BDM Firmware Commands”. The CPU resources referred to are the accumulator (D), X index register (X), Y index register (Y), stack pointer (SP), and program counter (PC).

Hardware commands can be executed at any time and in any mode excluding a few exceptions as highlighted (see Section 5.4.3, “BDM Hardware Commands”) and in secure mode (see Section 5.4.1, “Security”). Firmware commands can only be executed when the system is not secure and is in active background debug mode (BDM).

5.4.1 Security

If the user resets into special single chip mode with the system secured, a secured mode BDM firmware lookup table is brought into the map overlapping a portion of the standard BDM firmware lookup table. The secure BDM firmware verifies that the on-chip non-volatile memory (e.g. EEPROM and Flash EEPROM) is erased. This being the case, the UNSEC and ENBDM bit will get set. The BDM program jumps to the start of the standard BDM firmware and the secured mode BDM firmware is turned off and all BDM commands are allowed. If the non-volatile memory does not verify as erased, the BDM firmware sets the ENBDM bit, without asserting UNSEC, and the firmware enters a loop. This causes the BDM hardware commands to become enabled, but does not enable the firmware commands. This allows the BDM hardware to be used to erase the non-volatile memory.

BDM operation is not possible in any other mode than special single chip mode when the device is secured. The device can be unsecured via BDM serial interface in special single chip mode only. More information regarding security is provided in the security section of the device documentation.

5.4.2 Enabling and Activating BDM

The system must be in active BDM to execute standard BDM firmware commands. BDM can be activated only after being enabled. BDM is enabled by setting the ENBDM bit in the BDM status (BDMSTS) register. The ENBDM bit is set by writing to the BDM status (BDMSTS) register, via the single-wire interface, using a hardware command such as WRITE_BD_BYTE.

After being enabled, BDM is activated by one of the following[1]:

- Hardware BACKGROUND command
- CPU BGND instruction
- External instruction tagging mechanism[2]
- Breakpoint force or tag mechanism[2]

When BDM is activated, the CPU finishes executing the current instruction and then begins executing the firmware in the standard BDM firmware lookup table. When BDM is activated by a breakpoint, the type of breakpoint used determines if BDM becomes active before or after execution of the next instruction.

NOTE

If an attempt is made to activate BDM before being enabled, the CPU resumes normal instruction execution after a brief delay. If BDM is not enabled, any hardware BACKGROUND commands issued are ignored by the BDM and the CPU is not delayed.

In active BDM, the BDM registers and standard BDM firmware lookup table are mapped to addresses 0x7FFF00 to 0x7FFFFF. BDM registers are mapped to addresses 0x7FFF00 to 0x7FFF0B. The BDM uses these registers which are readable anytime by the BDM. However, these registers are not readable by user programs.

1. BDM is enabled and active immediately out of special single-chip reset.
2. This method is provided by the S12X_DBG module.

5.4.3 BDM Hardware Commands

Hardware commands are used to read and write target system memory locations and to enter active background debug mode. Target system memory includes all memory that is accessible by the CPU on the SOC which can be on-chip RAM, non-volatile memory (e.g. EEPROM, Flash EEPROM), I/O and control registers, and all external memory.

Hardware commands are executed with minimal or no CPU intervention and do not require the system to be in active BDM for execution, although, they can still be executed in this mode. When executing a hardware command, the BDM sub-block waits for a free bus cycle so that the background access does not disturb the running application program. If a free cycle is not found within 128 clock cycles, the CPU is momentarily frozen so that the BDM can steal a cycle. When the BDM finds a free cycle, the operation does not intrude on normal CPU operation provided that it can be completed in a single cycle. However, if an operation requires multiple cycles the CPU is frozen until the operation is complete, even though the BDM found a free cycle.

The BDM hardware commands are listed in Table 5-6.

The READ_BD and WRITE_BD commands allow access to the BDM register locations. These locations are not normally in the system memory map but share addresses with the application in memory. To distinguish between physical memory locations that share the same address, BDM memory resources are enabled just for the READ_BD and WRITE_BD access cycle. This allows the BDM to access BDM locations unobtrusively, even if the addresses conflict with the application memory map.

Table 5-6. Hardware Commands

Command	Opcode (hex)	Data	Description
BACKGROUND	90	None	Enter background mode if firmware is enabled. If enabled, an ACK will be issued when the part enters active background mode.
ACK_ENABLE	D5	None	Enable Handshake. Issues an ACK pulse after the command is executed.
ACK_DISABLE	D6	None	Disable Handshake. This command does not issue an ACK pulse.
READ_BD_BYTE	E4	16-bit address 16-bit data out	Read from memory with standard BDM firmware lookup table in map. Odd address data on low byte; even address data on high byte.
READ_BD_WORD	EC	16-bit address 16-bit data out	Read from memory with standard BDM firmware lookup table in map. Must be aligned access.
READ_BYTE	E0	16-bit address 16-bit data out	Read from memory with standard BDM firmware lookup table out of map. Odd address data on low byte; even address data on high byte.
READ_WORD	E8	16-bit address 16-bit data out	Read from memory with standard BDM firmware lookup table out of map. Must be aligned access.
WRITE_BD_BYTE	C4	16-bit address 16-bit data in	Write to memory with standard BDM firmware lookup table in map. Odd address data on low byte; even address data on high byte.
WRITE_BD_WORD	CC	16-bit address 16-bit data in	Write to memory with standard BDM firmware lookup table in map. Must be aligned access.
WRITE_BYTE	C0	16-bit address 16-bit data in	Write to memory with standard BDM firmware lookup table out of map. Odd address data on low byte; even address data on high byte.

Table 5-6. Hardware Commands (continued)

Command	Opcode (hex)	Data	Description
WRITE_WORD	C8	16-bit address 16-bit data in	Write to memory with standard BDM firmware lookup table out of map. Must be aligned access.

NOTE:
If enabled, ACK will occur when data is ready for transmission for all BDM READ commands and will occur after the write is complete for all BDM WRITE commands.

5.4.4 Standard BDM Firmware Commands

Firmware commands are used to access and manipulate CPU resources. The system must be in active BDM to execute standard BDM firmware commands, see Section 5.4.2, “Enabling and Activating BDM”. Normal instruction execution is suspended while the CPU executes the firmware located in the standard BDM firmware lookup table. The hardware command BACKGROUND is the usual way to activate BDM.

As the system enters active BDM, the standard BDM firmware lookup table and BDM registers become visible in the on-chip memory map at 0x7FFF00–0x7FFFFF, and the CPU begins executing the standard BDM firmware. The standard BDM firmware watches for serial commands and executes them as they are received.

The firmware commands are shown in Table 5-7.

Table 5-7. Firmware Commands

Command[1]	Opcode (hex)	Data	Description
READ_NEXT[2]	62	16-bit data out	Increment X index register by 2 (X = X + 2), then read word X points to.
READ_PC	63	16-bit data out	Read program counter.
READ_D	64	16-bit data out	Read D accumulator.
READ_X	65	16-bit data out	Read X index register.
READ_Y	66	16-bit data out	Read Y index register.
READ_SP	67	16-bit data out	Read stack pointer.
WRITE_NEXT<f-helvetica><st-superscript>	42	16-bit data in	Increment X index register by 2 (X = X + 2), then write word to location pointed to by X.
WRITE_PC	43	16-bit data in	Write program counter.
WRITE_D	44	16-bit data in	Write D accumulator.
WRITE_X	45	16-bit data in	Write X index register.
WRITE_Y	46	16-bit data in	Write Y index register.
WRITE_SP	47	16-bit data in	Write stack pointer.
GO	08	none	Go to user program. If enabled, ACK will occur when leaving active background mode.
GO_UNTIL[3]	0C	none	Go to user program. If enabled, ACK will occur upon returning to active background mode.
TRACE1	10	none	Execute one user instruction then return to active BDM. If enabled, ACK will occur upon returning to active background mode.
TAGGO -> GO	18	none	(Previous enable tagging and go to user program.) This command will be deprecated and should not be used anymore. Opcode will be executed as a GO command.

1 If enabled, ACK will occur when data is ready for transmission for all BDM READ commands and will occur after the write is complete for all BDM WRITE commands.

2 When the firmware command READ_NEXT or WRITE_NEXT is used to access the BDM address space the BDM resources are accessed rather than user code. Writing BDM firmware is not possible.

3 System stop disables the ACK function and ignored commands will not have an ACK-pulse (e.g., CPU in stop or wait mode). The GO_UNTIL command will not get an Acknowledge if CPU executes the wait or stop instruction before the “UNTIL” condition (BDM active again) is reached (see Section 5.4.7, “Serial Interface Hardware Handshake Protocol” last Note).

5.4.5 BDM Command Structure

Hardware and firmware BDM commands start with an 8-bit opcode followed by a 16-bit address and/or a 16-bit data word depending on the command. All the read commands return 16 bits of data despite the byte or word implication in the command name.

8-bit reads return 16-bits of data, of which, only one byte will contain valid data. If reading an even address, the valid data will appear in the MSB. If reading an odd address, the valid data will appear in the LSB.

16-bit misaligned reads and writes are generally not allowed. If attempted by BDM hardware command, the BDM will ignore the least significant bit of the address and will assume an even address from the remaining bits.

For devices with external bus:

The following cycle count information is only valid when the external wait function is not used (see wait bit of EBI sub-block). During an external wait the BDM can not steal a cycle. Hence be careful with the external wait function if the BDM serial interface is much faster than the bus, because of the BDM soft-reset after time-out (see Section 5.4.11, “Serial Communication Time Out”).

For hardware data read commands, the external host must wait at least 150 bus clock cycles after sending the address before attempting to obtain the read data. This is to be certain that valid data is available in the BDM shift register, ready to be shifted out. For hardware write commands, the external host must wait 150 bus clock cycles after sending the data to be written before attempting to send a new command. This is to avoid disturbing the BDM shift register before the write has been completed. The 150 bus clock cycle delay in both cases includes the maximum 128 cycle delay that can be incurred as the BDM waits for a free cycle before stealing a cycle.

For firmware read commands, the external host should wait at least 48 bus clock cycles after sending the command opcode and before attempting to obtain the read data. This includes the potential of extra cycles when the access is external and stretched (+1 to maximum +7 cycles) or to registers of the PRU (port replacement unit) in emulation modes (if modes available). The 48 cycle wait allows enough time for the requested data to be made available in the BDM shift register, ready to be shifted out.

NOTE

This timing has increased from previous BDM modules due to the new capability in which the BDM serial interface can potentially run faster than the bus. On previous BDM modules this extra time could be hidden within the serial time.

For firmware write commands, the external host must wait 36 bus clock cycles after sending the data to be written before attempting to send a new command. This is to avoid disturbing the BDM shift register before the write has been completed.

The external host should wait at least for 76 bus clock cycles after a TRACE1 or GO command before starting any new serial command. This is to allow the CPU to exit gracefully from the standard BDM firmware lookup table and resume execution of the user code. Disturbing the BDM shift register prematurely may adversely affect the exit from the standard BDM firmware lookup table.

NOTE

If the bus rate of the target processor is unknown or could be changing or the external wait function is used, it is recommended that the ACK (acknowledge function) is used to indicate when an operation is complete. When using ACK, the delay times are automated.

Figure 5-7 represents the BDM command structure. The command blocks illustrate a series of eight bit times starting with a falling edge. The bar across the top of the blocks indicates that the BKGD line idles in the high state. The time for an 8-bit command is 8×16 target clock cycles.[1]

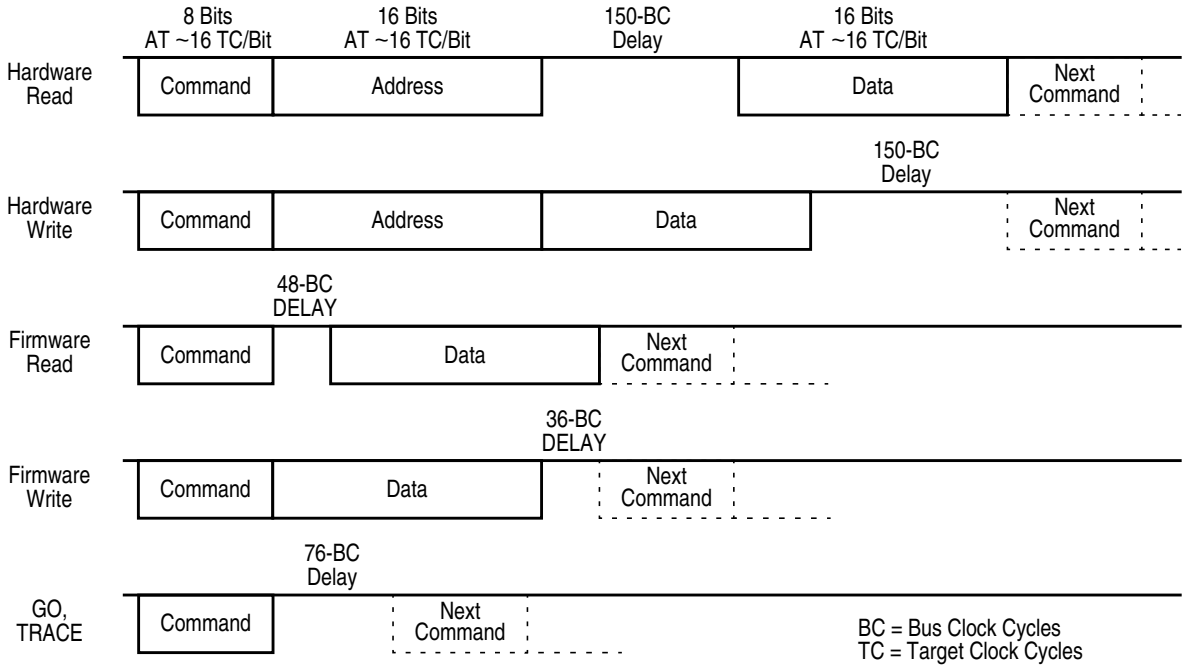

Figure 5-7. BDM Command Structure

5.4.6 BDM Serial Interface

The BDM communicates with external devices serially via the BKGD pin. During reset, this pin is a mode select input which selects between normal and special modes of operation. After reset, this pin becomes the dedicated serial interface pin for the BDM.

The BDM serial interface is timed using the clock selected by the CLKSW bit in the status register see Section 5.3.2.1, “BDM Status Register (BDMSTS)”. This clock will be referred to as the target clock in the following explanation.

The BDM serial interface uses a clocking scheme in which the external host generates a falling edge on the BKGD pin to indicate the start of each bit time. This falling edge is sent for every bit whether data is transmitted or received. Data is transferred most significant bit (MSB) first at 16 target clock cycles per bit. The interface times out if 512 clock cycles occur between falling edges from the host.

The BKGD pin is a pseudo open-drain pin and has an weak on-chip active pull-up that is enabled at all times. It is assumed that there is an external pull-up and that drivers connected to BKGD do not typically drive the high level. Since R-C rise time could be unacceptably long, the target system and host provide brief driven-high (speedup) pulses to drive BKGD to a logic 1. The source of this speedup pulse is the host for transmit cases and the target for receive cases.

The timing for host-to-target is shown in Figure 5-8 and that of target-to-host in Figure 5-9 and Figure 5-10. All four cases begin when the host drives the BKGD pin low to generate a falling edge. Since the host and target are operating from separate clocks, it can take the target system up to one full clock

1. Target clock cycles are cycles measured using the target MCU’s serial clock rate. See Section 5.4.6, “BDM Serial Interface” and Section 5.3.2.1, “BDM Status Register (BDMSTS)” for information on how serial clock rate is selected.

cycle to recognize this edge. The target measures delays from this perceived start of the bit time while the host measures delays from the point it actually drove BKGD low to start the bit up to one target clock cycle earlier. Synchronization between the host and target is established in this manner at the start of every bit time.

Figure 5-8 shows an external host transmitting a logic 1 and transmitting a logic 0 to the BKGD pin of a target system. The host is asynchronous to the target, so there is up to a one clock-cycle delay from the host-generated falling edge to where the target recognizes this edge as the beginning of the bit time. Ten target clock cycles later, the target senses the bit level on the BKGD pin. Internal glitch detect logic requires the pin be driven high no later that eight target clock cycles after the falling edge for a logic 1 transmission.

Since the host drives the high speedup pulses in these two cases, the rising edges look like digitally driven signals.

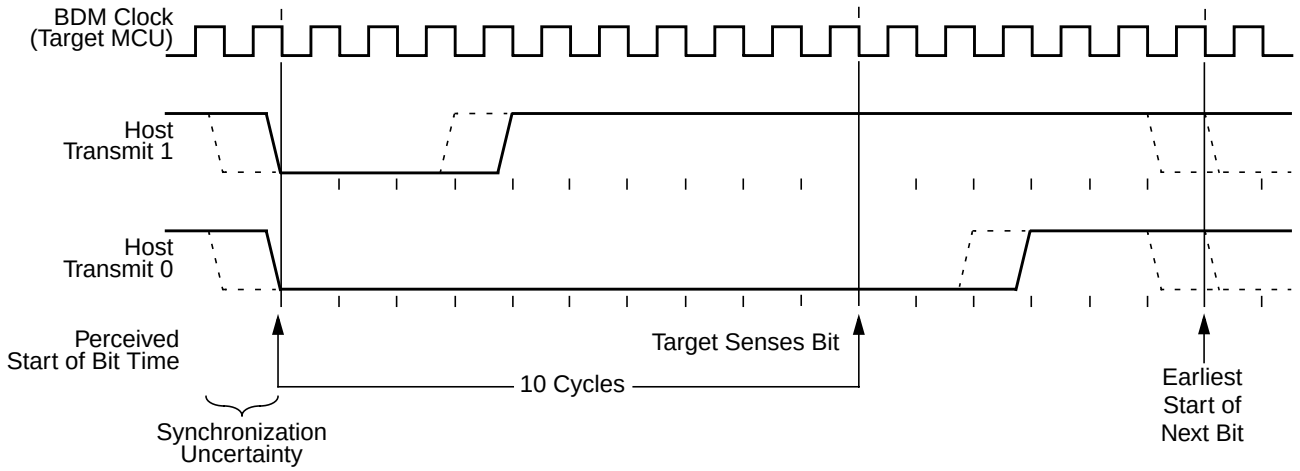

Figure 5-8. BDM Host-to-Target Serial Bit Timing

The receive cases are more complicated. Figure 5-9 shows the host receiving a logic 1 from the target system. Since the host is asynchronous to the target, there is up to one clock-cycle delay from the host-generated falling edge on BKGD to the perceived start of the bit time in the target. The host holds the BKGD pin low long enough for the target to recognize it (at least two target clock cycles). The host must release the low drive before the target drives a brief high speedup pulse seven target clock cycles after the perceived start of the bit time. The host should sample the bit level about 10 target clock cycles after it started the bit time.

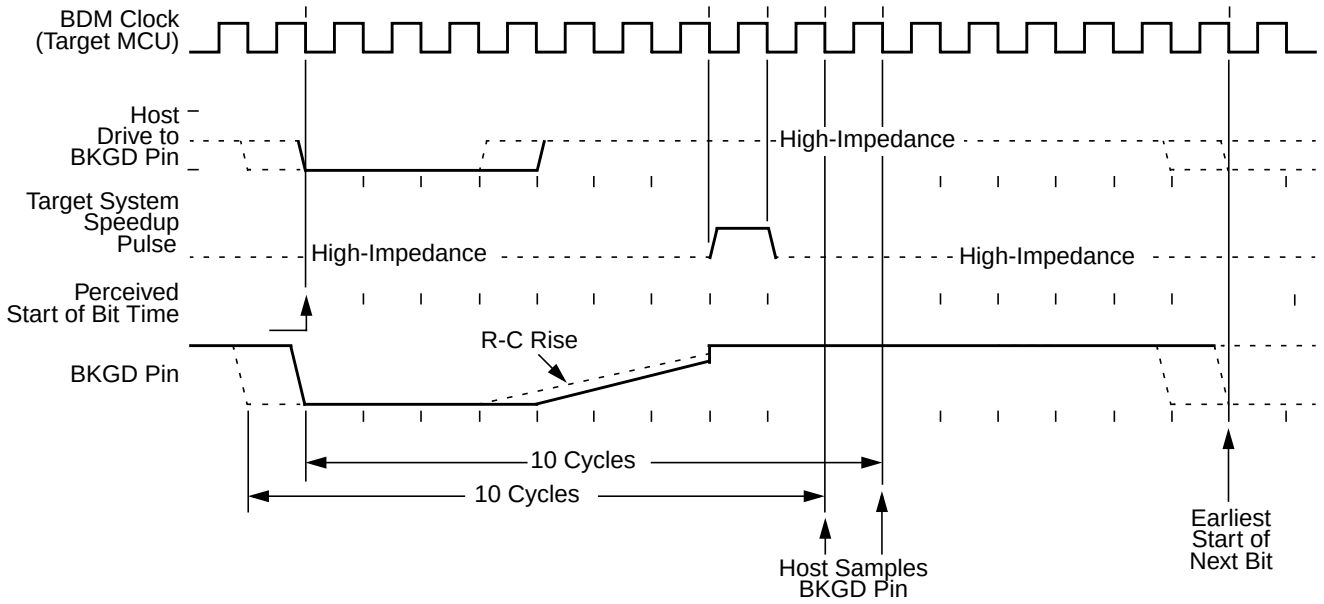

Figure 5-9. BDM Target-to-Host Serial Bit Timing (Logic 1)

Figure 5-10 shows the host receiving a logic 0 from the target. Since the host is asynchronous to the target, there is up to a one clock-cycle delay from the host-generated falling edge on BKGD to the start of the bit time as perceived by the target. The host initiates the bit time but the target finishes it. Since the target wants the host to receive a logic 0, it drives the BKGD pin low for 13 target clock cycles then briefly drives it high to speed up the rising edge. The host samples the bit level about 10 target clock cycles after starting the bit time.

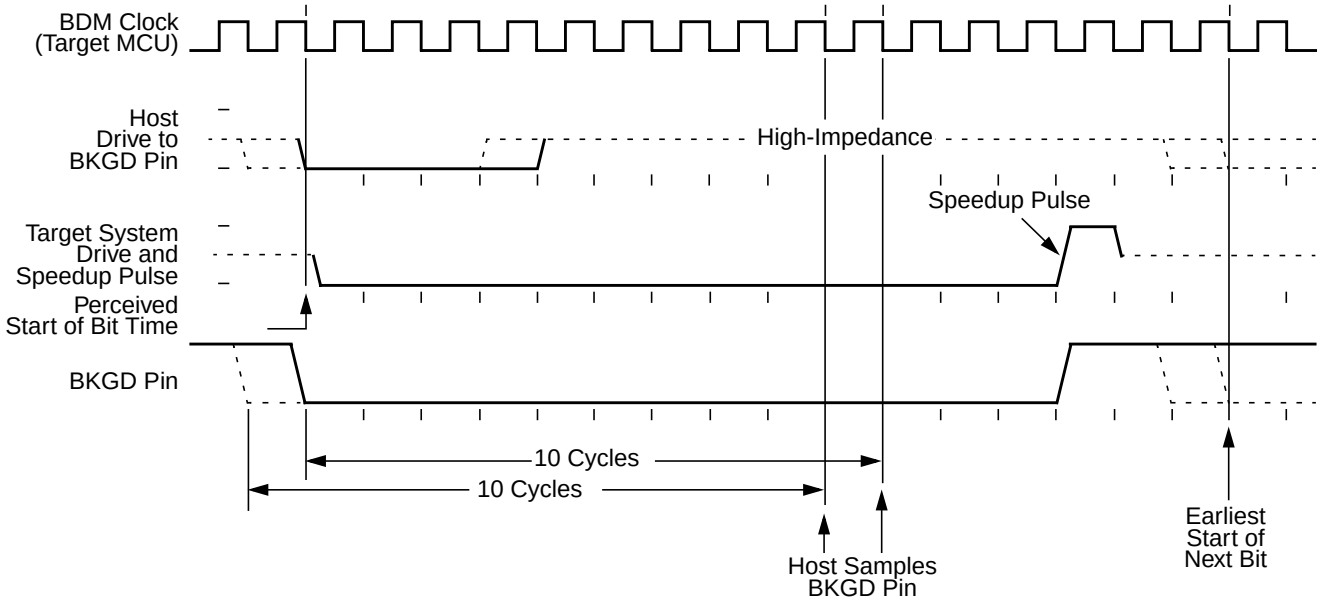

Figure 5-10. BDM Target-to-Host Serial Bit Timing (Logic 0)

5.4.7 Serial Interface Hardware Handshake Protocol

BDM commands that require CPU execution are ultimately treated at the MCU bus rate. Since the BDM clock source can be asynchronously related to the bus frequency, when CLKSW = 0, it is very helpful to provide a handshake protocol in which the host could determine when an issued command is executed by the CPU. The alternative is to always wait the amount of time equal to the appropriate number of cycles at the slowest possible rate the clock could be running. This sub-section will describe the hardware handshake protocol.

The hardware handshake protocol signals to the host controller when an issued command was successfully executed by the target. This protocol is implemented by a 16 serial clock cycle low pulse followed by a brief speedup pulse in the BKGD pin. This pulse is generated by the target MCU when a command, issued by the host, has been successfully executed (see Figure 5-11). This pulse is referred to as the ACK pulse. After the ACK pulse has finished: the host can start the bit retrieval if the last issued command was a read command, or start a new command if the last command was a write command or a control command (BACKGROUND, GO, GO_UNTIL or TRACE1). The ACK pulse is not issued earlier than 32 serial clock cycles after the BDM command was issued. The end of the BDM command is assumed to be the 16th tick of the last bit. This minimum delay assures enough time for the host to perceive the ACK pulse. Note also that, there is no upper limit for the delay between the command and the related ACK pulse, since the command execution depends upon the CPU bus frequency, which in some cases could be very slow

compared to the serial communication rate. This protocol allows a great flexibility for the POD designers, since it does not rely on any accurate time measurement or short response time to any event in the serial communication.

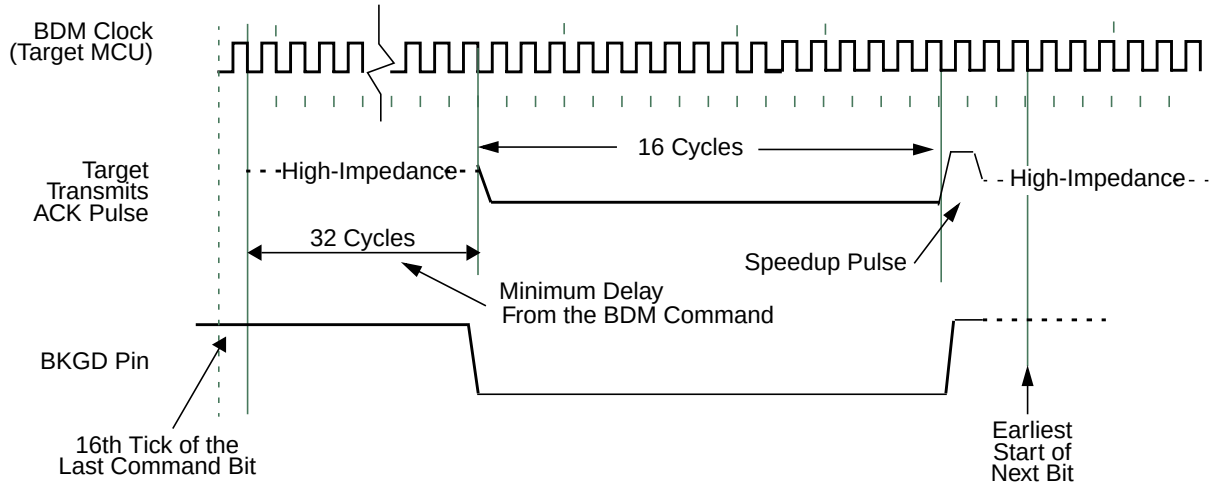

Figure 5-11. Target Acknowledge Pulse (ACK)

NOTE

If the ACK pulse was issued by the target, the host assumes the previous command was executed. If the CPU enters wait or stop prior to executing a hardware command, the ACK pulse will not be issued meaning that the BDM command was not executed. After entering wait or stop mode, the BDM command is no longer pending.

Figure 5-12 shows the ACK handshake protocol in a command level timing diagram. The READ_BYTE instruction is used as an example. First, the 8-bit instruction opcode is sent by the host, followed by the address of the memory location to be read. The target BDM decodes the instruction. A bus cycle is grabbed (free or stolen) by the BDM and it executes the READ_BYTE operation. Having retrieved the data, the BDM issues an ACK pulse to the host controller, indicating that the addressed byte is ready to be retrieved. After detecting the ACK pulse, the host initiates the byte retrieval process. Note that data is sent in the form of a word and the host needs to determine which is the appropriate byte based on whether the address was odd or even.

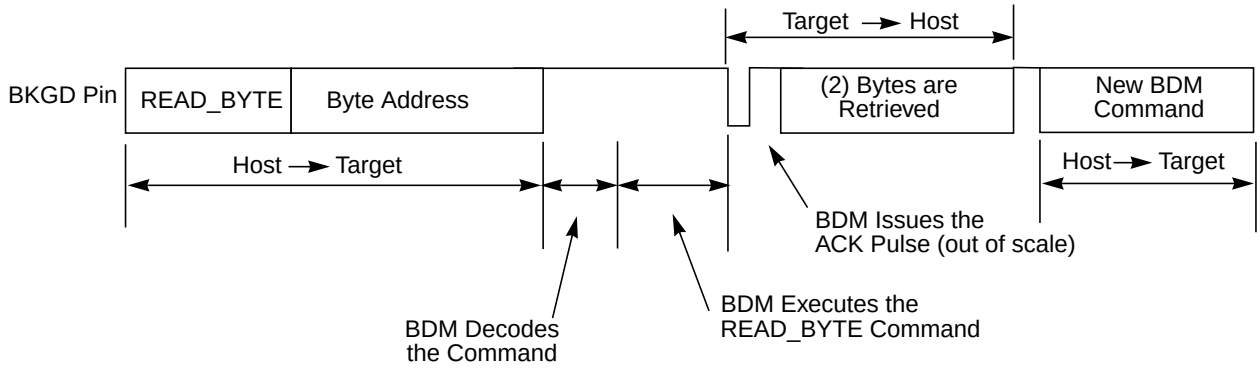

Figure 5-12. Handshake Protocol at Command Level

Differently from the normal bit transfer (where the host initiates the transmission), the serial interface ACK handshake pulse is initiated by the target MCU by issuing a negative edge in the BKGD pin. The hardware handshake protocol in Figure 5-11 specifies the timing when the BKGD pin is being driven, so the host should follow this timing constraint in order to avoid the risk of an electrical conflict in the BKGD pin.

NOTE

The only place the BKGD pin can have an electrical conflict is when one side is driving low and the other side is issuing a speedup pulse (high). Other "highs" are pulled rather than driven. However, at low rates the time of the speedup pulse can become lengthy and so the potential conflict time becomes longer as well.

The ACK handshake protocol does not support nested ACK pulses. If a BDM command is not acknowledge by an ACK pulse, the host needs to abort the pending command first in order to be able to issue a new BDM command. When the CPU enters wait or stop while the host issues a hardware command (e.g., WRITE_BYTE), the target discards the incoming command due to the wait or stop being detected. Therefore, the command is not acknowledged by the target, which means that the ACK pulse will not be issued in this case. After a certain time the host (not aware of stop or wait) should decide to abort any possible pending ACK pulse in order to be sure a new command can be issued. Therefore, the protocol provides a mechanism in which a command, and its corresponding ACK, can be aborted.

NOTE

The ACK pulse does not provide a time out. This means for the GO_UNTIL command that it can not be distinguished if a stop or wait has been executed (command discarded and ACK not issued) or if the "UNTIL" condition (BDM active) is just not reached yet. Hence in any case where the ACK pulse of a command is not issued the possible pending command should be aborted before issuing a new command. See the handshake abort procedure described in Section 5.4.8, "Hardware Handshake Abort Procedure".

5.4.8 Hardware Handshake Abort Procedure

The abort procedure is based on the SYNC command. In order to abort a command, which had not issued the corresponding ACK pulse, the host controller should generate a low pulse in the BKGD pin by driving it low for at least 128 serial clock cycles and then driving it high for one serial clock cycle, providing a speedup pulse. By detecting this long low pulse in the BKGD pin, the target executes the SYNC protocol, see Section 5.4.9, "SYNC — Request Timed Reference Pulse", and assumes that the pending command and therefore the related ACK pulse, are being aborted. Therefore, after the SYNC protocol has been completed the host is free to issue new BDM commands. For Firmware READ or WRITE commands it can not be guaranteed that the pending command is aborted when issuing a SYNC before the corresponding ACK pulse. There is a short latency time from the time the READ or WRITE access begins until it is finished and the corresponding ACK pulse is issued. The latency time depends on the firmware READ or WRITE command that is issued and if the serial interface is running on a different clock rate than the bus. When the SYNC command starts during this latency time the READ or WRITE command will not be aborted, but the corresponding ACK pulse will be aborted. A pending GO, TRACE1 or

GO_UNTIL command can not be aborted. Only the corresponding ACK pulse can be aborted by the SYNC command.

Although it is not recommended, the host could abort a pending BDM command by issuing a low pulse in the BKGD pin shorter than 128 serial clock cycles, which will not be interpreted as the SYNC command. The ACK is actually aborted when a negative edge is perceived by the target in the BKGD pin. The short abort pulse should have at least 4 clock cycles keeping the BKGD pin low, in order to allow the negative edge to be detected by the target. In this case, the target will not execute the SYNC protocol but the pending command will be aborted along with the ACK pulse. The potential problem with this abort procedure is when there is a conflict between the ACK pulse and the short abort pulse. In this case, the target may not perceive the abort pulse. The worst case is when the pending command is a read command (i.e., READ_BYTE). If the abort pulse is not perceived by the target the host will attempt to send a new command after the abort pulse was issued, while the target expects the host to retrieve the accessed memory byte. In this case, host and target will run out of synchronism. However, if the command to be aborted is not a read command the short abort pulse could be used. After a command is aborted the target assumes the next negative edge, after the abort pulse, is the first bit of a new BDM command.

NOTE

The details about the short abort pulse are being provided only as a reference for the reader to better understand the BDM internal behavior. It is not recommended that this procedure be used in a real application.

Since the host knows the target serial clock frequency, the SYNC command (used to abort a command) does not need to consider the lower possible target frequency. In this case, the host could issue a SYNC very close to the 128 serial clock cycles length. Providing a small overhead on the pulse length in order to assure the SYNC pulse will not be misinterpreted by the target. See Section 5.4.9, “SYNC — Request Timed Reference Pulse”.

Figure 5-13 shows a SYNC command being issued after a READ_BYTE, which aborts the READ_BYTE command. Note that, after the command is aborted a new command could be issued by the host computer.

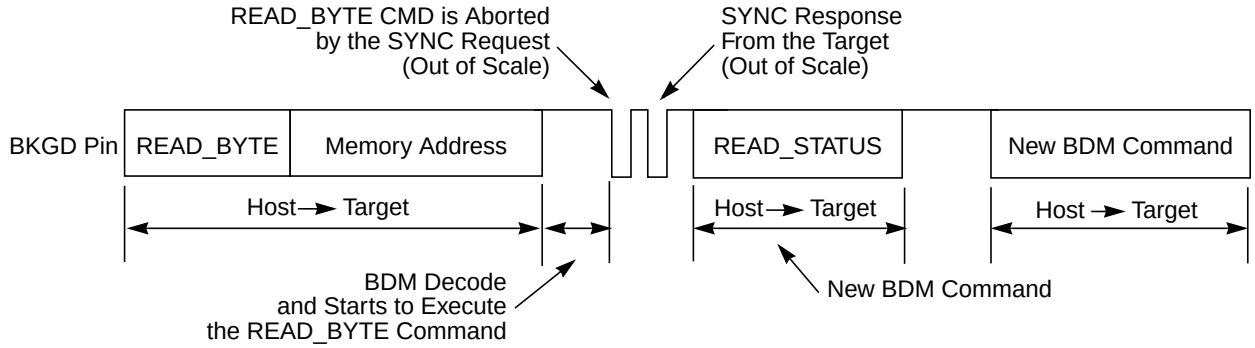

Figure 5-13. ACK Abort Procedure at the Command Level

NOTE

Figure 5-13 does not represent the signals in a true timing scale

Figure 5-14 shows a conflict between the ACK pulse and the SYNC request pulse. This conflict could occur if a POD device is connected to the target BKGD pin and the target is already in debug active mode.

Consider that the target CPU is executing a pending BDM command at the exact moment the POD is being connected to the BKGD pin. In this case, an ACK pulse is issued along with the SYNC command. In this case, there is an electrical conflict between the ACK speedup pulse and the SYNC pulse. Since this is not a probable situation, the protocol does not prevent this conflict from happening.

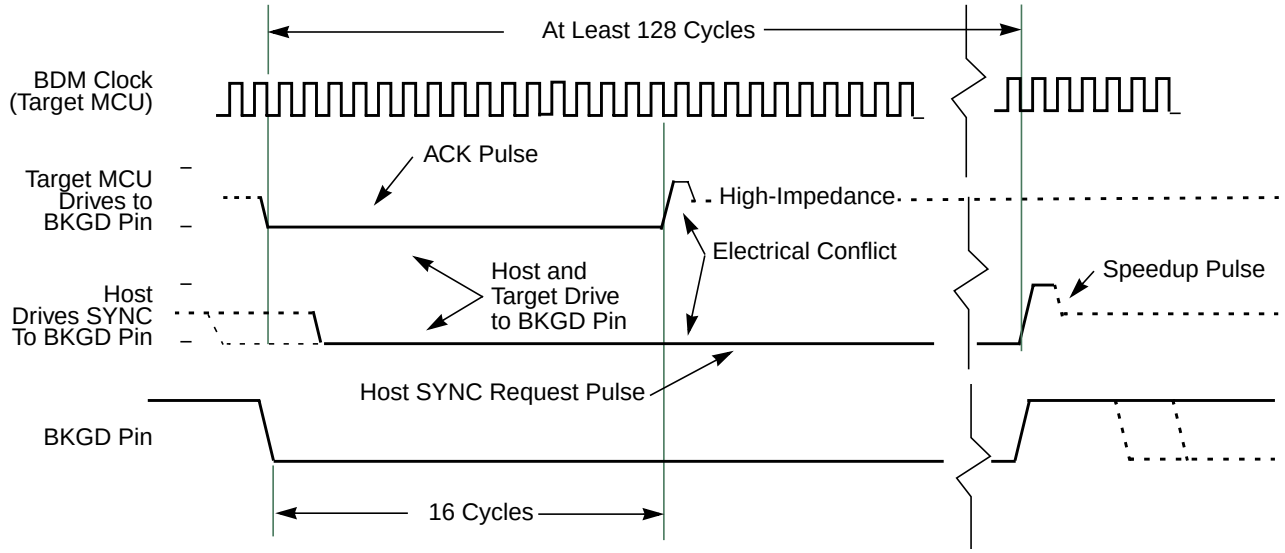

Figure 5-14. ACK Pulse and SYNC Request Conflict

NOTE

This information is being provided so that the MCU integrator will be aware that such a conflict could eventually occur.

The hardware handshake protocol is enabled by the ACK_ENABLE and disabled by the ACK_DISABLE BDM commands. This provides backwards compatibility with the existing POD devices which are not able to execute the hardware handshake protocol. It also allows for new POD devices, that support the hardware handshake protocol, to freely communicate with the target device. If desired, without the need for waiting for the ACK pulse.

The commands are described as follows:

- ACK_ENABLE — enables the hardware handshake protocol. The target will issue the ACK pulse when a CPU command is executed by the CPU. The ACK_ENABLE command itself also has the ACK pulse as a response.
- ACK_DISABLE — disables the ACK pulse protocol. In this case, the host needs to use the worst case delay time at the appropriate places in the protocol.

The default state of the BDM after reset is hardware handshake protocol disabled.

All the read commands will ACK (if enabled) when the data bus cycle has completed and the data is then ready for reading out by the BKGD serial pin. All the write commands will ACK (if enabled) after the data has been received by the BDM through the BKGD serial pin and when the data bus cycle is complete. See Section 5.4.3, “BDM Hardware Commands” and Section 5.4.4, “Standard BDM Firmware Commands” for more information on the BDM commands.

The ACK_ENABLE sends an ACK pulse when the command has been completed. This feature could be used by the host to evaluate if the target supports the hardware handshake protocol. If an ACK pulse is issued in response to this command, the host knows that the target supports the hardware handshake protocol. If the target does not support the hardware handshake protocol the ACK pulse is not issued. In this case, the ACK_ENABLE command is ignored by the target since it is not recognized as a valid command.

The BACKGROUND command will issue an ACK pulse when the CPU changes from normal to background mode. The ACK pulse related to this command could be aborted using the SYNC command.

The GO command will issue an ACK pulse when the CPU exits from background mode. The ACK pulse related to this command could be aborted using the SYNC command.

The GO_UNTIL command is equivalent to a GO command with exception that the ACK pulse, in this case, is issued when the CPU enters into background mode. This command is an alternative to the GO command and should be used when the host wants to trace if a breakpoint match occurs and causes the CPU to enter active background mode. Note that the ACK is issued whenever the CPU enters BDM, which could be caused by a breakpoint match or by a BGND instruction being executed. The ACK pulse related to this command could be aborted using the SYNC command.

The TRACE1 command has the related ACK pulse issued when the CPU enters background active mode after one instruction of the application program is executed. The ACK pulse related to this command could be aborted using the SYNC command.

5.4.9 SYNC — Request Timed Reference Pulse

The SYNC command is unlike other BDM commands because the host does not necessarily know the correct communication speed to use for BDM communications until after it has analyzed the response to the SYNC command. To issue a SYNC command, the host should perform the following steps:

1. Drive the BKGD pin low for at least 128 cycles at the lowest possible BDM serial communication frequency (the lowest serial communication frequency is determined by the crystal oscillator or the clock chosen by CLKSW.)
2. Drive BKGD high for a brief speedup pulse to get a fast rise time (this speedup pulse is typically one cycle of the host clock.)
3. Remove all drive to the BKGD pin so it reverts to high impedance.
4. Listen to the BKGD pin for the sync response pulse.

Upon detecting the SYNC request from the host, the target performs the following steps:

1. Discards any incomplete command received or bit retrieved.
2. Waits for BKGD to return to a logic one.
3. Delays 16 cycles to allow the host to stop driving the high speedup pulse.
4. Drives BKGD low for 128 cycles at the current BDM serial communication frequency.
5. Drives a one-cycle high speedup pulse to force a fast rise time on BKGD.
6. Removes all drive to the BKGD pin so it reverts to high impedance.

The host measures the low time of this 128 cycle SYNC response pulse and determines the correct speed for subsequent BDM communications. Typically, the host can determine the correct communication speed

within a few percent of the actual target speed and the communication protocol can easily tolerate speed errors of several percent.

As soon as the SYNC request is detected by the target, any partially received command or bit retrieved is discarded. This is referred to as a soft-reset, equivalent to a time-out in the serial communication. After the SYNC response, the target will consider the next negative edge (issued by the host) as the start of a new BDM command or the start of new SYNC request.

Another use of the SYNC command pulse is to abort a pending ACK pulse. The behavior is exactly the same as in a regular SYNC command. Note that one of the possible causes for a command to not be acknowledged by the target is a host-target synchronization problem. In this case, the command may not have been understood by the target and so an ACK response pulse will not be issued.

5.4.10 Instruction Tracing

When a TRACE1 command is issued to the BDM in active BDM, the CPU exits the standard BDM firmware and executes a single instruction in the user code. Once this has occurred, the CPU is forced to return to the standard BDM firmware and the BDM is active and ready to receive a new command. If the TRACE1 command is issued again, the next user instruction will be executed. This facilitates stepping or tracing through the user code one instruction at a time.

If an interrupt is pending when a TRACE1 command is issued, the interrupt stacking operation occurs but no user instruction is executed. Once back in standard BDM firmware execution, the program counter points to the first instruction in the interrupt service routine.

Be aware when tracing through the user code that the execution of the user code is done step by step but all peripherals are free running. Hence possible timing relations between CPU code execution and occurrence of events of other peripherals no longer exist.

Do not trace the CPU instruction BGND used for soft breakpoints. Tracing the BGND instruction will result in a return address pointing to BDM firmware address space.

When tracing through user code which contains stop or wait instructions the following will happen when the stop or wait instruction is traced:

The CPU enters stop or wait mode and the TRACE1 command can not be finished before leaving the low power mode. This is the case because BDM active mode can not be entered after CPU executed the stop instruction. However all BDM hardware commands except the BACKGROUND command are operational after tracing a stop or wait instruction and still being in stop or wait mode. If system stop mode is entered (all bus masters are in stop mode) no BDM command is operational.

As soon as stop or wait mode is exited the CPU enters BDM active mode and the saved PC value points to the entry of the corresponding interrupt service routine.

In case the handshake feature is enabled the corresponding ACK pulse of the TRACE1 command will be discarded when tracing a stop or wait instruction. Hence there is no ACK pulse when BDM active mode is entered as part of the TRACE1 command after CPU exited from stop or wait mode. All valid commands sent during CPU being in stop or wait mode or after CPU exited from stop or wait mode will have an ACK pulse. The handshake feature becomes disabled only when system stop mode has been reached. Hence

after a system stop mode the handshake feature must be enabled again by sending the ACK_ENABLE command.

5.4.11 Serial Communication Time Out

The host initiates a host-to-target serial transmission by generating a falling edge on the BKGD pin. If BKGD is kept low for more than 128 target clock cycles, the target understands that a SYNC command was issued. In this case, the target will keep waiting for a rising edge on BKGD in order to answer the SYNC request pulse. If the rising edge is not detected, the target will keep waiting forever without any time-out limit.

Consider now the case where the host returns BKGD to logic one before 128 cycles. This is interpreted as a valid bit transmission, and not as a SYNC request. The target will keep waiting for another falling edge marking the start of a new bit. If, however, a new falling edge is not detected by the target within 512 clock cycles since the last falling edge, a time-out occurs and the current command is discarded without affecting memory or the operating mode of the MCU. This is referred to as a soft-reset.

If a read command is issued but the data is not retrieved within 512 serial clock cycles, a soft-reset will occur causing the command to be disregarded. The data is not available for retrieval after the time-out has occurred. This is the expected behavior if the handshake protocol is not enabled. However, consider the behavior where the BDM is running in a frequency much greater than the CPU frequency. In this case, the command could time out before the data is ready to be retrieved. In order to allow the data to be retrieved even with a large clock frequency mismatch (between BDM and CPU) when the hardware handshake protocol is enabled, the time out between a read command and the data retrieval is disabled. Therefore, the host could wait for more then 512 serial clock cycles and still be able to retrieve the data from an issued read command. However, once the handshake pulse (ACK pulse) is issued, the time-out feature is re-activated, meaning that the target will time out after 512 clock cycles. Therefore, the host needs to retrieve the data within a 512 serial clock cycles time frame after the ACK pulse had been issued. After that period, the read command is discarded and the data is no longer available for retrieval. Any negative edge in the BKGD pin after the time-out period is considered to be a new command or a SYNC request.

Note that whenever a partially issued command, or partially retrieved data, has occurred the time out in the serial communication is active. This means that if a time frame higher than 512 serial clock cycles is observed between two consecutive negative edges and the command being issued or data being retrieved is not complete, a soft-reset will occur causing the partially received command or data retrieved to be disregarded. The next negative edge in the BKGD pin, after a soft-reset has occurred, is considered by the target as the start of a new BDM command, or the start of a SYNC request pulse.

Chapter 6
S12X Debug (S12XDBGV3) Module

Table 6-1. Revision History

Revision Number	Revision Date	Sections Affected	Description of Changes
V03.20	14 Sep 2007	6.3.2.7/6-205	- Clarified reserved State Sequencer encodings.
V03.21	23 Oct 2007	6.4.2.2/6-218 6.4.2.4/6-219	- Added single databyte comparison limitation information - Added statement about interrupt vector fetches whilst tagging.
V03.22	12 Nov 2007	6.4.5.2/6-223 6.4.5.5/6-227	- Removed LOOP1 tracing restriction NOTE. - Added pin reset effect NOTE.
V03.23	13 Nov 2007	General	- Text readability improved, typo removed.
V03.24	04 Jan 2008	6.4.5.3/6-225	- Corrected bit name.
V03.25	14 May 2008	General	- Updated Revision History Table format. Corrected other paragraph formats.
V03.26	12 Sep 2012	General	- Added missing full stops. Removed redundant quotation marks.

6.1 Introduction

The S12XDBG module provides an on-chip trace buffer with flexible triggering capability to allow non-intrusive debug of application software. The S12XDBG module is optimized for the S12X 16-bit architecture and allows debugging of CPU12X module operations.

Typically the S12XDBG module is used in conjunction with the S12XBDM module, whereby the user configures the S12XDBG module for a debugging session over the BDM interface. Once configured the S12XDBG module is armed and the device leaves BDM Mode returning control to the user program, which is then monitored by the S12XDBG module. Alternatively the S12XDBG module can be configured over a serial interface using SWI routines.

6.1.1 Glossary

Table 6-2. Glossary Of Terms

Term	Definition
COF	Change Of Flow. Change in the program flow due to a conditional branch, indexed jump or interrupt
BDM	Background Debug Mode
DUG	Device User Guide, describing the features of the device into which the DBG is integrated
WORD	16-bit data entity

Table 6-2. Glossary Of Terms (continued)

Term	Definition
Data Line	64-bit data entity
CPU	CPU12X module
Tag	Tags can be attached to CPU opcodes as they enter the instruction pipe. If the tagged opcode reaches the execution stage a tag hit occurs.

6.1.2 Overview

The comparators monitor the bus activity of the CPU12X. When a match occurs the control logic can trigger the state sequencer to a new state. On a transition to the Final State, bus tracing is triggered and/or a breakpoint can be generated.

Independent of comparator matches a transition to Final State with associated tracing and breakpoint can be triggered by writing to the TRIG control bit.

The trace buffer is visible through a 2-byte window in the register address map and can be read out using standard 16-bit word reads. Tracing is disabled when the MCU system is secured.

6.1.3 Features

- Four comparators (A, B, C, and D)
  - Comparators A and C compare the full address bus and full 16-bit data bus
  - Comparators A and C feature a data bus mask register
  - Comparators B and D compare the full address bus only
  - Each comparator can be configured to monitor CPU12X buses
  - Each comparator features selection of read or write access cycles
  - Comparators B and D allow selection of byte or word access cycles
  - Comparisons can be used as triggers for the state sequencer
- Three comparator modes
  - Simple address/data comparator match mode
  - Inside address range mode, Addmin ≤ Address ≤ Addmax
  - Outside address range match mode, Address < Addmin or Address > Addmax
- Two types of triggers
  - Tagged — This triggers just before a specific instruction begins execution
  - Force — This triggers on the first instruction boundary after a match occurs.
- The following types of breakpoints
  - CPU12X breakpoint entering BDM on breakpoint (BDM)
  - CPU12X breakpoint executing SWI on breakpoint (SWI)
- TRIG Immediate software trigger independent of comparators
- Four trace modes

— Normal: change of flow (COF) PC information is stored (see Section 6.4.5.2.1) for change of flow definition.
— Loop1: same as Normal but inhibits consecutive duplicate source address entries
— Detail: address and data for all cycles except free cycles and opcode fetches are stored
— Pure PC: All program counter addresses are stored.

- 4-stage state sequencer for trace buffer control
  — Tracing session trigger linked to Final State of state sequencer
  — Begin, End, and Mid alignment of tracing to trigger

6.1.4 Modes of Operation

The S12XDBG module can be used in all MCU functional modes.

During BDM hardware accesses and whilst the BDM module is active, CPU12X monitoring is disabled. Thus breakpoints, comparators, and CPU12X bus tracing are disabled . When the CPU12X enters active BDM Mode through a BACKGROUND command, with the S12XDBG module armed, the S12XDBG remains armed.

The S12XDBG module tracing is disabled if the MCU is secure. However, breakpoints can still be generated if the MCU is secure.

Table 6-3. Mode Dependent Restriction Summary

BDM Enable	BDM Active	MCU Secure	Comparator Matches Enabled	Breakpoints Possible	Tagging Possible	Tracing Possible
x	x	1	Yes	Yes	Yes	No
0	0	0	Yes	Only SWI	Yes	Yes
0	1	0	Active BDM not possible when not enabled			
1	0	0	Yes	Yes	Yes	Yes
1	1	0	No	No	No	No

6.1.5 Block Diagram

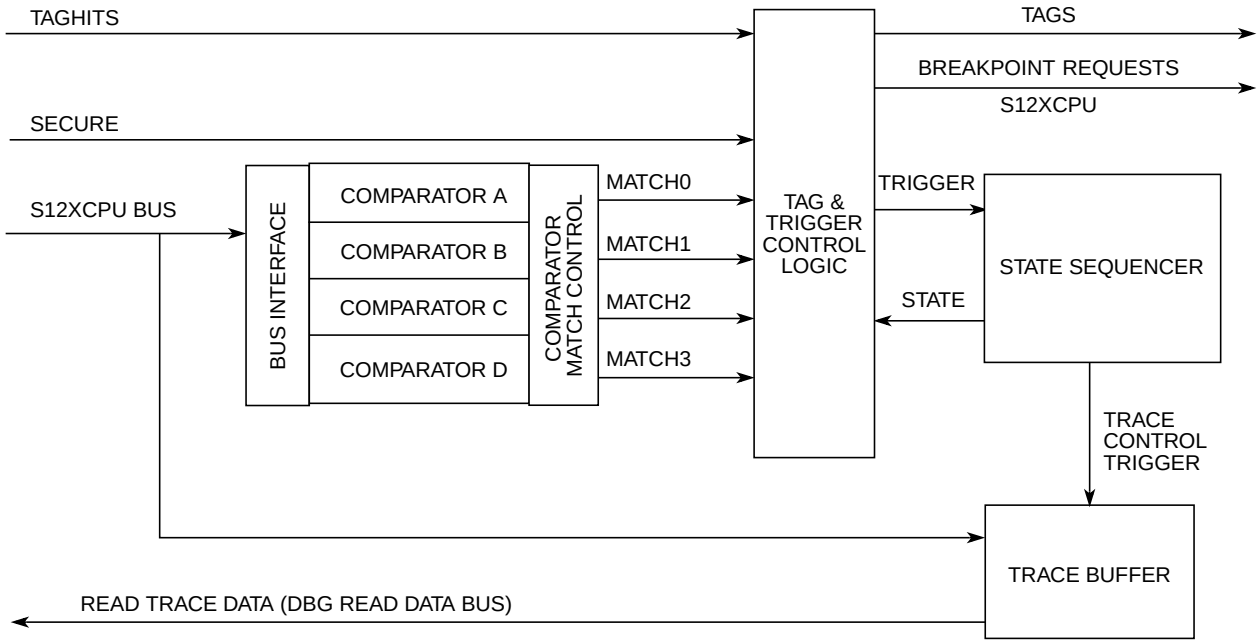

Figure 6-1. Debug Module Block Diagram

6.2 External Signal Description

The S12XDBG sub-module features no external signals.

6.3 Memory Map and Registers

6.3.1 Module Memory Map

A summary of the registers associated with the S12XDBG sub-block is shown in Table 6-2. Detailed descriptions of the registers and bits are given in the subsections that follow.

Address	Name		Bit 7	6	5	4	3	2	1	Bit 0
0x0020	DBGC1	R	ARM	0	reserved	BDM	DBGBRK	reserved	COMRV	
		W		TRIG						
0x0021	DBGSR	R	TBF	0	0	0	0	SSF2	SSF1	SSF0
		W								
0x0022	DBGTCR	R/W	reserved	TSOURCE	TRANGE		TRCMOD		TALIGN	
0x0023	DBGC2	R	0	0	0	0	CDCM		ABCM	
		W								

Figure 6-2. Quick Reference to S12XDBG Registers

Address	Name		Bit 7	6	5	4	3	2	1	Bit 0
0x0024	DBGTBH	R	Bit 15	Bit 14	Bit 13	Bit 12	Bit 11	Bit 10	Bit 9	Bit 8
		W								
0x0025	DBGTBL	R	Bit 7	Bit 6	Bit 5	Bit 4	Bit 3	Bit 2	Bit 1	Bit 0
		W								
0x0026	DBGCNT	R	0	CNT						
		W								
0x0027	DBGSCRX	R	0	0	0	0	SC3	SC2	SC1	SC0
		W								
0x0027	DBGMFR	R	0	0	0	0	MC3	MC2	MC1	MC0
		W								
0x0028[1]	DBGXCTL (COMPA/C)	R	0	NDB	TAG	BRK	RW	RWE	reserved	COMPE
		W								
0x0028[2]	DBGXCTL (COMPB/D)	R/W	SZE	SZ	TAG	BRK	RW	RWE	reserved	COMPE
0x0029	DBGXAH	R	0	Bit 22	21	20	19	18	17	Bit 16
		W								
0x002A	DBGXAM	R/W	Bit 15	14	13	12	11	10	9	Bit 8
0x002B	DBGXAL	R/W	Bit 7	6	5	4	3	2	1	Bit 0
0x002C	DBGXDH	R/W	Bit 15	14	13	12	11	10	9	Bit 8
0x002D	DBGXDL	R/W	Bit 7	6	5	4	3	2	1	Bit 0
0x002E	DBGXDHM	R/W	Bit 15	14	13	12	11	10	9	Bit 8
0x002F	DBGXDLM	R/W	Bit 7	6	5	4	3	2	1	Bit 0

[1] This represents the contents if the Comparator A or C control register is blended into this address.

[2] This represents the contents if the Comparator B or D control register is blended into this address

Figure 6-2. Quick Reference to S12XDBG Registers

6.3.2 Register Descriptions

This section consists of the S12XDBG control and trace buffer register descriptions in address order. Each comparator has a bank of registers that are visible through an 8-byte window between 0x0028 and 0x002F in the S12XDBG module register address map. When ARM is set in DBGC1, the only bits in the S12XDBG module registers that can be written are ARM, TRIG, and COMRV[1:0].

6.3.2.1 Debug Control Register 1 (DBGC1)

Address: 0x0020

	7	6	5	4	3	2	1	0
R	ARM	0	reserved	BDM	DBGBRK	reserved	COMRV	
W		TRIG						
Reset	0	0	0	0	0	0	0	0

Figure 6-3. Debug Control Register (DBGC1)

Read: Anytime

Write: Bits 7, 1, 0 anytime
Bit 6 can be written anytime but always reads back as 0.
Bits 5:2 anytime S12XDBG is not armed.

NOTE

If a write access to DBGC1 with the ARM bit position set occurs simultaneously to a hardware disarm from an internal trigger event, then the ARM bit is cleared due to the hardware disarm.

NOTE

When disarming the S12XDBG by clearing ARM with software, the contents of bits[5:2] are not affected by the write, since up until the write operation, ARM = 1 preventing these bits from being written. These bits must be cleared using a second write if required.

Table 6-4. DBGC1 Field Descriptions

Field	Description
7 ARM	**Arm Bit** — The ARM bit controls whether the S12XDBG module is armed. This bit can be set and cleared by user software and is automatically cleared on completion of a tracing session, or if a breakpoint is generated with tracing not enabled. On setting this bit the state sequencer enters State1. 0 Debugger disarmed 1 Debugger armed
6 TRIG	**Immediate Trigger Request Bit** — This bit when written to 1 requests an immediate trigger independent of comparator signal status. When tracing is complete a forced breakpoint may be generated depending upon DBGBRK and BDM bit settings. This bit always reads back a 0. Writing a 0 to this bit has no effect. If TSOURCE is clear no tracing is carried out. If tracing has already commenced using BEGIN- or MID trigger alignment, it continues until the end of the tracing session as defined by the TALIGN bit settings, thus TRIG has no affect. In secure mode tracing is disabled and writing to this bit has no effect. 0 Do not trigger until the state sequencer enters the Final State. 1 Trigger immediately .
5 reserved	This bit is reserved, setting it has no meaning or effect.
4 BDM	**Background Debug Mode Enable** — This bit determines if an S12X breakpoint causes the system to enter Background Debug Mode (BDM) or initiate a Software Interrupt (SWI). If this bit is set but the BDM is not enabled by the ENBDM bit in the BDM module, then breakpoints default to SWI. 0 Breakpoint to Software Interrupt if BDM inactive. Otherwise no breakpoint. 1 Breakpoint to BDM, if BDM enabled. Otherwise breakpoint to SWI

Table 6-4. DBGC1 Field Descriptions (continued)

Field	Description
3 DBGBRK	**S12XDBG Breakpoint Enable Bit** — The DBGBRK bit controls whether the debugger will request a breakpoint to S12XCPU upon reaching the state sequencer Final State. If tracing is enabled, the breakpoint is generated on completion of the tracing session. If tracing is not enabled, the breakpoint is generated immediately. Please refer to Section 6.4.7 for further details. 0 No breakpoint on trigger. 1 Breakpoint on trigger
1–0 COMRV	**Comparator Register Visibility Bits** — These bits determine which bank of comparator register is visible in the 8-byte window of the S12XDBG module address map, located between 0x0028 to 0x002F. Furthermore these bits determine which register is visible at the address 0x0027. See Table 6-5.

Table 6-5. COMRV Encoding

COMRV	Visible Comparator	Visible Register at 0x0027
00	Comparator A	DBGSCR1
01	Comparator B	DBGSCR2
10	Comparator C	DBGSCR3
11	Comparator D	DBGMFR

6.3.2.2 Debug Status Register (DBGSR)

Address: 0x0021

	7	6	5	4	3	2	1	0
R	TBF	0	0	0	0	SSF2	SSF1	SSF0
W								
Reset	—	0	0	0	0	0	0	0
POR	0	0	0	0	0	0	0	0

= Unimplemented or Reserved

Figure 6-4. Debug Status Register (DBGSR)

Read: Anytime

Write: Never

Table 6-6. DBGSR Field Descriptions

Field	Description
7 TBF	**Trace Buffer Full** — The TBF bit indicates that the trace buffer has stored 64 or more lines of data since it was last armed. If this bit is set, then all 64 lines will be valid data, regardless of the value of DBGCNT bits CNT[6:0]. The TBF bit is cleared when ARM in DBGC1 is written to a one. The TBF is cleared by the power on reset initialization. Other system generated resets have no affect on this bit.
2–0 SSF[2:0]	**State Sequencer Flag Bits** — The SSF bits indicate in which state the State Sequencer is currently in. During a debug session on each transition to a new state these bits are updated. If the debug session is ended by software clearing the ARM bit, then these bits retain their value to reflect the last state of the state sequencer before disarming. If a debug session is ended by an internal trigger, then the state sequencer returns to state0 and these bits are cleared to indicate that state0 was entered during the session. On arming the module the state sequencer enters state1 and these bits are forced to SSF[2:0] = 001. See Table 6-7.

Table 6-7. SSF[2:0] — State Sequence Flag Bit Encoding

SSF[2:0]	Current State
000	State0 (disarmed)
001	State1
010	State2
011	State3
100	Final State
101,110,111	Reserved

6.3.2.3 Debug Trace Control Register (DBGTCR)

Address: 0x0022

	7	6	5	4	3	2	1	0
R W	reserved	TSOURCE	TRANGE		TRCMOD		TALIGN	
Reset	0	0	0	0	0	0	0	0

Figure 6-5. Debug Trace Control Register (DBGTCR)

Read: Anytime

Write: Bits 7:6 only when S12XDBG is neither secure nor armed.
Bits 5:0 anytime the module is disarmed.

WARNING
DBGTCR[7] is reserved. Setting this bit maps the tracing to an unimplemented bus, thus preventing proper operation.

Table 6-8. DBGTCR Field Descriptions

Field	Description
6 TSOURCE	**Trace Source Control Bits** — The TSOURCE enables the tracing session. If the MCU system is secured, this bit cannot be set and tracing is inhibited. 0 No tracing selected 1 Tracing selected
5–4 TRANGE	**Trace Range Bits** — The TRANGE bits allow filtering of trace information from a selected address range when tracing from the CPU12X in Detail Mode. To use a comparator for range filtering, the corresponding COMPE bits must remain cleared. If the COMPE bit is not clear then the comparator will also be used to generate state sequence triggers. See Table 6-9.
3–2 TRCMOD	**Trace Mode Bits** — See Section 6.4.5.2 for detailed Trace Mode descriptions. In Normal Mode, change of flow information is stored. In Loop1 Mode, change of flow information is stored but redundant entries into trace memory are inhibited. In Detail Mode, address and data for all memory and register accesses is stored. See Table 6-10.
1–0 TALIGN	**Trigger Align Bits** — These bits control whether the trigger is aligned to the beginning, end or the middle of a tracing session. See Table 6-11.

Table 6-9. TRANGE Trace Range Encoding

TRANGE	Tracing Range
00	Trace from all addresses (No filter)
01	Trace only in address range from $00000 to Comparator D
10	Trace only in address range from Comparator C to $7FFFFF
11	Trace only in range from Comparator C to Comparator D

Table 6-10. TRCMOD Trace Mode Bit Encoding

TRCMOD	Description
00	Normal
01	Loop1
10	Detail
11	Pure PC

Table 6-11. TALIGN Trace Alignment Encoding

TALIGN	Description
00	Trigger at end of stored data
01	Trigger before storing data
10	Trace buffer entries before and after trigger
11	Reserved

6.3.2.4 Debug Control Register2 (DBGC2)

Address: 0x0023

	7	6	5	4	3	2	1	0
R	0	0	0	0	CDCM		ABCM	
W								
Reset	0	0	0	0	0	0	0	0

= Unimplemented or Reserved

Figure 6-6. Debug Control Register2 (DBGC2)

Read: Anytime

Write: Anytime the module is disarmed.

This register configures the comparators for range matching.

Table 6-12. DBGC2 Field Descriptions

Field	Description
3–2 CDCM[1:0]	**C and D Comparator Match Control** — These bits determine the C and D comparator match mapping as described in Table 6-13.
1–0 ABCM[1:0]	**A and B Comparator Match Control** — These bits determine the A and B comparator match mapping as described in Table 6-14.

Table 6-13. CDCM Encoding

CDCM	Description
00	Match2 mapped to comparator C match..... Match3 mapped to comparator D match.
01	Match2 mapped to comparator C/D inside range..... Match3 disabled.
10	Match2 mapped to comparator C/D outside range..... Match3 disabled.
11	Reserved(1)

1. Currently defaults to Match2 mapped to comparator C : Match3 mapped to comparator D

Table 6-14. ABCM Encoding

ABCM	Description
00	Match0 mapped to comparator A match..... Match1 mapped to comparator B match.
01	Match 0 mapped to comparator A/B inside range..... Match1 disabled.
10	Match 0 mapped to comparator A/B outside range..... Match1 disabled.
11	Reserved(1)

1. Currently defaults to Match0 mapped to comparator A : Match1 mapped to comparator B

6.3.2.5 Debug Trace Buffer Register (DBGTBH:DBGTBL)

Address: 0x0024, 0x0025

	15	14	13	12	11	10	9	8	7	6	5	4	3	2	1	0
R W	Bit 15	Bit 14	Bit 13	Bit 12	Bit 11	Bit 10	Bit 9	Bit 8	Bit 7	Bit 6	Bit 5	Bit 4	Bit 3	Bit 2	Bit 1	Bit 0
POR	X	X	X	X	X	X	X	X	X	X	X	X	X	X	X	X
Other Resets	—	—	—	—	—	—	—	—	—	—	—	—	—	—	—	—

Figure 6-7. Debug Trace Buffer Register (DBGTB)

Read: Only when unlocked AND not secured AND not armed AND with the TSOURCE bit set.

Write: Aligned word writes when disarmed unlock the trace buffer for reading but do not affect trace buffer contents.

Table 6-15. DBGTB Field Descriptions

Field	Description
15–0 Bit[15:0]	**Trace Buffer Data Bits** — The Trace Buffer Register is a window through which the 64-bit wide data lines of the Trace Buffer may be read 16 bits at a time. Each valid read of DBGTB increments an internal trace buffer pointer which points to the next address to be read. When the ARM bit is written to 1 the trace buffer is locked to prevent reading. The trace buffer can only be unlocked for reading by writing to DBGTB with an aligned word write when the module is disarmed. The DBGTB register can be read only as an aligned word, any byte reads or misaligned access of these registers will return 0 and will not cause the trace buffer pointer to increment to the next trace buffer address. The same is true for word reads while the debugger is armed. The POR state is undefined Other resets do not affect the trace buffer contents. .

6.3.2.6 Debug Count Register (DBGCNT)

Address: 0x0026

	7	6	5	4	3	2	1	0
R	0	CNT						
W								
Reset	0	—	—	—	—	—	—	—
POR	0	0	0	0	0	0	0	0

= Unimplemented or Reserved

Figure 6-8. Debug Count Register (DBGCNT)

Read: Anytime

Write: Never

Table 6-16. DBGCNT Field Descriptions

Field	Description
6–0 CNT[6:0]	**Count Value** — The CNT bits [6:0] indicate the number of valid data 64-bit data lines stored in the Trace Buffer. Table 6-17 shows the correlation between the CNT bits and the number of valid data lines in the Trace Buffer. When the CNT rolls over to zero, the TBF bit in DBGSR is set and incrementing of CNT will continue in end-trigger or mid-trigger mode. The DBGCNT register is cleared when ARM in DBGC1 is written to a one. The DBGCNT register is cleared by power-on-reset initialization but is not cleared by other system resets. Thus should a reset occur during a debug session, the DBGCNT register still indicates after the reset, the number of valid trace buffer entries stored before the reset occurred. The DBGCNT register is not decremented when reading from the trace buffer.

Table 6-17. CNT Decoding Table

TBF (DBGSR)	CNT[6:0]	Description
0	0000000	No data valid
0	0000001	32 bits of one line valid
0	0000010 0000100 0000110 .. 1111100	1 line valid 2 lines valid 3 lines valid .. 62 lines valid
0	1111110	63 lines valid
1	0000000	64 lines valid; if using Begin trigger alignment, ARM bit will be cleared and the tracing session ends.
1	0000010 1111110	64 lines valid, oldest data has been overwritten by most recent data

6.3.2.7 Debug State Control Registers

There is a dedicated control register for each of the state sequencer states 1 to 3 that determines if transitions from that state are allowed, depending upon comparator matches or tag hits, and defines the

next state for the state sequencer following a match. The three debug state control registers are located at the same address in the register address map (0x0027). Each register can be accessed using the COMRV bits in DBGC1 to blend in the required register. The COMRV = 11 value blends in the match flag register (DBGMFR).

Table 6-18. State Control Register Access Encoding

COMRV	Visible State Control Register
00	DBGSCR1
01	DBGSCR2
10	DBGSCR3
11	DBGMFR

6.3.2.7.1 Debug State Control Register 1 (DBGSCR1)

Address: 0x0027

	7	6	5	4	3	2	1	0
R	0	0	0	0	SC3	SC2	SC1	SC0
W								
Reset	0	0	0	0	0	0	0	0

= Unimplemented or Reserved

Figure 6-9. Debug State Control Register 1 (DBGSCR1)

Read: If COMRV[1:0] = 00

Write: If COMRV[1:0] = 00 and S12XDBG is not armed.

This register is visible at 0x0027 only with COMRV[1:0] = 00. The state control register 1 selects the targeted next state whilst in State1. The matches refer to the match channels of the comparator match control logic as depicted in Figure 6-1 and described in Section 6.3.2.8.1. Comparators must be enabled by setting the comparator enable bit in the associated DBGXCTL control register.

Table 6-19. DBGSCR1 Field Descriptions

Field	Description
3–0 SC[3:0]	These bits select the targeted next state whilst in State1, based upon the match event.

Table 6-20. State1 Sequencer Next State Selection

SC[3:0]	Description
0000	Any match triggers to state2
0001	Any match triggers to state3
0010	Any match triggers to Final State
0011	Match2 triggers to State2..... Other matches have no effect
0100	Match2 triggers to State3..... Other matches have no effect
0101	Match2 triggers to Final State..... Other matches have no effect
0110	Match0 triggers to State2..... Match1 triggers to State3..... Other matches have no effect

Table 6-20. State1 Sequencer Next State Selection (continued)

SC[3:0]	Description
0111	Match1 triggers to State3..... Match0 triggers Final State..... Other matches have no effect
1000	Match0 triggers to State2..... Match2 triggers to State3..... Other matches have no effect
1001	Match2 triggers to State3..... Match0 triggers Final State..... Other matches have no effect
1010	Match1 triggers to State2..... Match3 triggers to State3..... Other matches have no effect
1011	Match3 triggers to State3..... Match1 triggers to Final State..... Other matches have no effect
1100	Match3 has no effect..... All other matches (M0,M1,M2) trigger to State2
1101	Reserved. (No match triggers state sequencer transition)
1110	Reserved. (No match triggers state sequencer transition)
1111	Reserved. (No match triggers state sequencer transition)

The trigger priorities described in Table 6-39 dictate that in the case of simultaneous matches, the match on the lower channel number (0,1,2,3) has priority. The SC[3:0] encoding ensures that a match leading to final state has priority over all other matches.

6.3.2.7.2 Debug State Control Register 2 (DBGSCR2)

Address: 0x0027

	7	6	5	4	3	2	1	0
R	0	0	0	0	SC3	SC2	SC1	SC0
W								
Reset	0	0	0	0	0	0	0	0

= Unimplemented or Reserved

Figure 6-10. Debug State Control Register 2 (DBGSCR2)

Read: If COMRV[1:0] = 01

Write: If COMRV[1:0] = 01 and S12XDBG is not armed.

This register is visible at 0x0027 only with COMRV[1:0] = 01. The state control register 2 selects the targeted next state whilst in State2. The matches refer to the match channels of the comparator match control logic as depicted in Figure 6-1 and described in Section 6.3.2.8.1. Comparators must be enabled by setting the comparator enable bit in the associated DBGXCTL control register.

Table 6-21. DBGSCR2 Field Descriptions

Field	Description
3–0 SC[3:0]	These bits select the targeted next state whilst in State2, based upon the match event.

Table 6-22. State2 —Sequencer Next State Selection

SC[3:0]	Description
0000	Any match triggers to state1
0001	Any match triggers to state3
0010	Any match triggers to Final State
0011	Match3 triggers to State1..... Other matches have no effect
0100	Match3 triggers to State3..... Other matches have no effect

Table 6-22. State2 —Sequencer Next State Selection (continued)

SC[3:0]	Description
0101	Match3 triggers to Final State..... Other matches have no effect
0110	Match0 triggers to State1..... Match1 triggers to State3..... Other matches have no effect
0111	Match1 triggers to State3..... Match0 triggers Final State..... Other matches have no effect
1000	Match0 triggers to State1..... Match2 triggers to State3..... Other matches have no effect
1001	Match2 triggers to State3..... Match0 triggers Final State..... Other matches have no effect
1010	Match1 triggers to State1..... Match3 triggers to State3..... Other matches have no effect
1011	Match3 triggers to State3..... Match1 triggers Final State..... Other matches have no effect
1100	Match2 triggers to State1..... Match3 trigger to Final State
1101	Match2 has no affect, all other matches (M0,M1,M3) trigger to Final State
1110	Reserved. (No match triggers state sequencer transition)
1111	Reserved. (No match triggers state sequencer transition)

The trigger priorities described in Table 6-39 dictate that in the case of simultaneous matches, the match on the lower channel number (0,1,2,3) has priority. The SC[3:0] encoding ensures that a match leading to final state has priority over all other matches.

6.3.2.7.3 Debug State Control Register 3 (DBGSCR3)

Address: 0x0027

	7	6	5	4	3	2	1	0
R	0	0	0	0	SC3	SC2	SC1	SC0
W								
Reset	0	0	0	0	0	0	0	0

= Unimplemented or Reserved

Figure 6-11. Debug State Control Register 3 (DBGSCR3)

Read: If COMRV[1:0] = 10

Write: If COMRV[1:0] = 10 and S12XDBG is not armed.

This register is visible at 0x0027 only with COMRV[1:0] = 10. The state control register three selects the targeted next state whilst in State3. The matches refer to the match channels of the comparator match control logic as depicted in Figure 6-1 and described in Section 6.3.2.8.1. Comparators must be enabled by setting the comparator enable bit in the associated DBGXCTL control register.

Table 6-23. DBGSCR3 Field Descriptions

Field	Description
3–0 SC[3:0]	These bits select the targeted next state whilst in State3, based upon the match event.

Table 6-24. State3 — Sequencer Next State Selection

SC[3:0]	Description
0000	Any match triggers to state1
0001	Any match triggers to state2

Table 6-24. State3 — Sequencer Next State Selection

SC[3:0]	Description
0010	Any match triggers to Final State
0011	Match0 triggers to State1..... Other matches have no effect
0100	Match0 triggers to State2..... Other matches have no effect
0101	Match0 triggers to Final State.....Match1 triggers to State1...Other matches have no effect
0110	Match1 triggers to State1..... Other matches have no effect
0111	Match1 triggers to State2..... Other matches have no effect
1000	Match1 triggers to Final State..... Other matches have no effect
1001	Match2 triggers to State2..... Match0 triggers to Final State..... Other matches have no effect
1010	Match1 triggers to State1..... Match3 triggers to State2..... Other matches have no effect
1011	Match3 triggers to State2..... Match1 triggers to Final State..... Other matches have no effect
1100	Match2 triggers to Final State..... Other matches have no effect
1101	Match3 triggers to Final State..... Other matches have no effect
1110	Reserved. (No match triggers state sequencer transition)
1111	Reserved. (No match triggers state sequencer transition)

The trigger priorities described in Table 6-39 dictate that in the case of simultaneous matches, the match on the lower channel number (0,1,2,3) has priority. The SC[3:0] encoding ensures that a match leading to final state has priority over all other matches.

6.3.2.7.4 Debug Match Flag Register (DBGMFR)

Address: 0x0027

	7	6	5	4	3	2	1	0
R	0	0	0	0	MC3	MC2	MC1	MC0
W								
Reset	0	0	0	0	0	0	0	0

= Unimplemented or Reserved

Figure 6-12. Debug Match Flag Register (DBGMFR)

Read: If COMRV[1:0] = 11

Write: Never

DBGMFR is visible at 0x0027 only with COMRV[1:0] = 11. It features four flag bits each mapped directly to a channel. Should a match occur on the channel during the debug session, then the corresponding flag is set and remains set until the next time the module is armed by writing to the ARM bit. Thus the contents are retained after a debug session for evaluation purposes. These flags cannot be cleared by software, they are cleared only when arming the module. A set flag does not inhibit the setting of other flags. Once a flag is set, further triggers on the same channel have no affect.

6.3.2.8 Comparator Register Descriptions

Each comparator has a bank of registers that are visible through an 8-byte window in the S12XDBG module register address map. Comparators A and C consist of 8 register bytes (3 address bus compare registers, two data bus compare registers, two data bus mask registers and a control register).

Comparators B and D consist of four register bytes (three address bus compare registers and a control register).

Each set of comparator registers is accessible in the same 8-byte window of the register address map and can be accessed using the COMRV bits in the DBGC1 register. If the Comparators B or D are accessed through the 8-byte window, then only the address and control bytes are visible, the 4 bytes associated with data bus and data bus masking read as zero and cannot be written. Furthermore the control registers for comparators B and D differ from those of comparators A and C.

Table 6-25. Comparator Register Layout

0x0028	CONTROL	Read/Write	Comparators A,B,C,D
0x0029	ADDRESS HIGH	Read/Write	Comparators A,B,C,D
0x002A	ADDRESS MEDIUM	Read/Write	Comparators A,B,C,D
0x002B	ADDRESS LOW	Read/Write	Comparators A,B,C,D
0x002C	DATA HIGH COMPARATOR	Read/Write	Comparator A and C only
0x002D	DATA LOW COMPARATOR	Read/Write	Comparator A and C only
0x002E	DATA HIGH MASK	Read/Write	Comparator A and C only
0x002F	DATA LOW MASK	Read/Write	Comparator A and C only

6.3.2.8.1 Debug Comparator Control Register (DBGXCTL)

The contents of this register bits 7 and 6 differ depending upon which comparator registers are visible in the 8-byte window of the DBG module register address map.

Address: 0x0028

	7	6	5	4	3	2	1	0
R	0	NDB	TAG	BRK	RW	RWE	reserved	COMPE
W								
Reset	0	0	0	0	0	0	0	0

= Unimplemented or Reserved

Figure 6-13. Debug Comparator Control Register (Comparators A and C)

Address: 0x0028

	7	6	5	4	3	2	1	0
R	SZE	SZ	TAG	BRK	RW	RWE	reserved	COMPE
W								
Reset	0	0	0	0	0	0	0	0

Figure 6-14. Debug Comparator Control Register (Comparators B and D)

Read: Anytime. See Table 6-26 for visible register encoding.

Write: If DBG not armed. See Table 6-26 for visible register encoding.

WARNING

DBGXCTL[1] is reserved. Setting this bit maps the corresponding comparator to an

unimplemented bus, thus preventing proper operation.

The DBGC1_COMRV bits determine which comparator control, address, data and datamask registers are visible in the 8-byte window from 0x0028 to 0x002F as shown in Section Table 6-26.

Table 6-26. Comparator Address Register Visibility

COMRV	Visible Comparator
00	DBGACTL, DBGAAH ,DBGAAM, DBGAAL, DBGADH, DBGADL, DBGADHM, DBGADLM
01	DBGBCTL, DBGBAH, DBGBAM, DBGBAL
10	DBGCCTL, DBGCAH, DBGCAM, DBGCAL, DBGCDH, DBGCDL, DBGCDHM, DBGCDLM
11	DBGDCTL, DBGDAH, DBGDAM, DBGDAL

Table 6-27. DBGXCTL Field Descriptions

Field	Description
7 SZE (Comparators B and D)	**Size Comparator Enable Bit** — The SZE bit controls whether access size comparison is enabled for the associated comparator. This bit is ignored if the TAG bit in the same register is set. 0 Word/Byte access size is not used in comparison 1 Word/Byte access size is used in comparison
6 NDB (Comparators A and C	**Not Data Bus** — The NDB bit controls whether the match occurs when the data bus matches the comparator register value or when the data bus differs from the register value. Furthermore data bus bits can be individually masked using the comparator data mask registers. This bit is only available for comparators A and C. This bit is ignored if the TAG bit in the same register is set. This bit position has an SZ functionality for comparators B and D. 0 Match on data bus equivalence to comparator register contents 1 Match on data bus difference to comparator register contents
6 SZ (Comparators B and D)	**Size Comparator Value Bit** — The SZ bit selects either word or byte access size in comparison for the associated comparator. This bit is ignored if the SZE bit is cleared or if the TAG bit in the same register is set. This bit position has NDB functionality for comparators A and C 0 Word access size will be compared 1 Byte access size will be compared
5 TAG	**Tag Select** — This bit controls whether the comparator match will cause a trigger or tag the opcode at the matched address. Tagged opcodes trigger only if they reach the execution stage of the instruction queue. 0 Trigger immediately on match 1 On match, tag the opcode. If the opcode is about to be executed a trigger is generated
4 BRK	**Break** — This bit controls whether a channel match terminates a debug session immediately, independent of state sequencer state. To generate an immediate breakpoint the module breakpoints must be enabled using DBGBRK. 0 The debug session termination is dependent upon the state sequencer and trigger conditions. 1 A match on this channel terminates the debug session immediately; breakpoints if active are generated, tracing, if active, is terminated and the module disarmed.
3 RW	**Read/Write Comparator Value Bit** — The RW bit controls whether read or write is used in compare for the associated comparator . The RW bit is not used if RWE = 0. 0 Write cycle will be matched 1 Read cycle will be matched
2 RWE	**Read/Write Enable Bit** — The RWE bit controls whether read or write comparison is enabled for the associated comparator. This bit is not used for tagged operations. 0 Read/Write is not used in comparison 1 Read/Write is used in comparison

Table 6-27. DBGXCTL Field Descriptions (continued)

Field	Description
0 COMPE	Determines if comparator is enabled 0 The comparator is not enabled 1 The comparator is enabled for state sequence triggers or tag generation

Table 6-28 shows the effect for RWE and RW on the comparison conditions. These bits are not useful for tagged operations since the trigger occurs based on the tagged opcode reaching the execution stage of the instruction queue. Thus these bits are ignored if tagged triggering is selected.

Table 6-28. Read or Write Comparison Logic Table

RWE Bit	RW Bit	RW Signal	Comment
0	x	0	RW not used in comparison
0	x	1	RW not used in comparison
1	0	0	Write
1	0	1	No match
1	1	0	No match
1	1	1	Read

6.3.2.8.2 Debug Comparator Address High Register (DBGXAH)

Address: 0x0029

	7	6	5	4	3	2	1	0
R	0	Bit 22	Bit 21	Bit 20	Bit 19	Bit 18	Bit 17	Bit 16
W								
Reset	0	0	0	0	0	0	0	0

= Unimplemented or Reserved

Figure 6-15. Debug Comparator Address High Register (DBGXAH)

Read: Anytime. See Table 6-26 for visible register encoding.

Write: If DBG not armed. See Table 6-26 for visible register encoding.

Table 6-29. DBGXAH Field Descriptions

Field	Description
6–0 Bit[22:16]	**Comparator Address High Compare Bits** — The Comparator address high compare bits control whether the selected comparator will compare the address bus bits [22:16] to a logic one or logic zero. . 0 Compare corresponding address bit to a logic zero 1 Compare corresponding address bit to a logic one

6.3.2.8.3 Debug Comparator Address Mid Register (DBGXAM)

Address: 0x002A

	7	6	5	4	3	2	1	0
R W	Bit 15	Bit 14	Bit 13	Bit 12	Bit 11	Bit 10	Bit 9	Bit 8
Reset	0	0	0	0	0	0	0	0

Figure 6-16. Debug Comparator Address Mid Register (DBGXAM)

Read: Anytime. See Table 6-26 for visible register encoding.

Write: If DBG not armed. See Table 6-26 for visible register encoding.

Table 6-30. DBGXAM Field Descriptions

Field	Description
7–0 Bit[15:8]	**Comparator Address Mid Compare Bits**— The Comparator address mid compare bits control whether the selected comparator will compare the address bus bits [15:8] to a logic one or logic zero. 0 Compare corresponding address bit to a logic zero 1 Compare corresponding address bit to a logic one

6.3.2.8.4 Debug Comparator Address Low Register (DBGXAL)

Address: 0x002B

	7	6	5	4	3	2	1	0
R W	Bit 7	Bit 6	Bit 5	Bit 4	Bit 3	Bit 2	Bit 1	Bit 0
Reset	0	0	0	0	0	0	0	0

Figure 6-17. Debug Comparator Address Low Register (DBGXAL)

Read: Anytime. See Table 6-26 for visible register encoding.

Write: If DBG not armed. See Table 6-26 for visible register encoding.

Table 6-31. DBGXAL Field Descriptions

Field	Description
7–0 Bits[7:0]	**Comparator Address Low Compare Bits** — The Comparator address low compare bits control whether the selected comparator will compare the address bus bits [7:0] to a logic one or logic zero. 0 Compare corresponding address bit to a logic zero 1 Compare corresponding address bit to a logic one

6.3.2.8.5 Debug Comparator Data High Register (DBGXDH)

Address: 0x002C

	7	6	5	4	3	2	1	0
R/W	Bit 15	Bit 14	Bit 13	Bit 12	Bit 11	Bit 10	Bit 9	Bit 8
Reset	0	0	0	0	0	0	0	0

Figure 6-18. Debug Comparator Data High Register (DBGXDH)

Read: Anytime. See Table 6-26 for visible register encoding.

Write: If DBG not armed. See Table 6-26 for visible register encoding.

Table 6-32. DBGXAH Field Descriptions

Field	Description
7–0 Bits[15:8]	**Comparator Data High Compare Bits** — The Comparator data high compare bits control whether the selected comparator compares the data bus bits [15:8] to a logic one or logic zero. The comparator data compare bits are only used in comparison if the corresponding data mask bit is logic 1. This register is available only for comparators A and C. 0 Compare corresponding data bit to a logic zero 1 Compare corresponding data bit to a logic one

6.3.2.8.6 Debug Comparator Data Low Register (DBGXDL)

Address: 0x002D

	7	6	5	4	3	2	1	0
R/W	Bit 7	Bit 6	Bit 5	Bit 4	Bit 3	Bit 2	Bit 1	Bit 0
Reset	0	0	0	0	0	0	0	0

Figure 6-19. Debug Comparator Data Low Register (DBGXDL)

Read: Anytime. See Table 6-26 for visible register encoding.

Write: If DBG not armed. See Table 6-26 for visible register encoding.

Table 6-33. DBGXDL Field Descriptions

Field	Description
7–0 Bits[7:0]	**Comparator Data Low Compare Bits** — The Comparator data low compare bits control whether the selected comparator compares the data bus bits [7:0] to a logic one or logic zero. The comparator data compare bits are only used in comparison if the corresponding data mask bit is logic 1. This register is available only for comparators A and C. 0 Compare corresponding data bit to a logic zero 1 Compare corresponding data bit to a logic one

6.3.2.8.7 Debug Comparator Data High Mask Register (DBGXDHM)

Address: 0x002E

	7	6	5	4	3	2	1	0
R W	Bit 15	Bit 14	Bit 13	Bit 12	Bit 11	Bit 10	Bit 9	Bit 8
Reset	0	0	0	0	0	0	0	0

Figure 6-20. Debug Comparator Data High Mask Register (DBGXDHM)

Read: Anytime. See Table 6-26 for visible register encoding.

Write: If DBG not armed. See Table 6-26 for visible register encoding.

Table 6-34. DBGXDHM Field Descriptions

Field	Description
7–0 Bits[15:8]	**Comparator Data High Mask Bits** — The Comparator data high mask bits control whether the selected comparator compares the data bus bits [15:8] to the corresponding comparator data compare bits. This register is available only for comparators A and C. 0 Do not compare corresponding data bit 1 Compare corresponding data bit

6.3.2.8.8 Debug Comparator Data Low Mask Register (DBGXDLM)

Address: 0x002F

	7	6	5	4	3	2	1	0
R W	Bit 7	Bit 6	Bit 5	Bit 4	Bit 3	Bit 2	Bit 1	Bit 0
Reset	0	0	0	0	0	0	0	0

Figure 6-21. Debug Comparator Data Low Mask Register (DBGXDLM)

Read: Anytime. See Table 6-26 for visible register encoding.

Write: If DBG not armed. See Table 6-26 for visible register encoding.

Table 6-35. DBGXDLM Field Descriptions

Field	Description
7–0 Bits[7:0]	**Comparator Data Low Mask Bits** — The Comparator data low mask bits control whether the selected comparator compares the data bus bits [7:0] to the corresponding comparator data compare bits. This register is available only for comparators A and C. 0 Do not compare corresponding data bit 1 Compare corresponding data bit

6.4 Functional Description

This section provides a complete functional description of the S12XDBG module. If the part is in secure mode, the S12XDBG module can generate breakpoints but tracing is not possible.

6.4.1 S12XDBG Operation

Arming the S12XDBG module by setting ARM in DBGC1 allows triggering, and storing of data in the trace buffer and can be used to cause breakpoints to the CPU12X . The DBG module is made up of four main blocks, the comparators, control logic, the state sequencer, and the trace buffer.

The comparators monitor the bus activity of the CPU12X . Comparators can be configured to monitor address and databus. Comparators can also be configured to mask out individual data bus bits during a compare and to use R/W and word/byte access qualification in the comparison. When a match with a comparator register value occurs the associated control logic can trigger the state sequencer to another state (see Figure 6-22). Either forced or tagged triggers are possible. Using a forced trigger, the trigger is generated immediately on a comparator match. Using a tagged trigger, at a comparator match, the instruction opcode is tagged and only if the instruction reaches the execution stage of the instruction queue is a trigger generated. In the case of a transition to Final State, bus tracing is triggered and/or a breakpoint can be generated.

Independent of the state sequencer, a breakpoint can be triggered by writing to the TRIG bit in the DBGC1 control register.

The trace buffer is visible through a 2-byte window in the register address map and can be read out using standard 16-bit word reads.

6.4.2 Comparator Modes

The S12XDBG contains four comparators, A, B, C, and D. Each comparator compares the selected address bus with the address stored in DBGXAH, DBGXAM, and DBGXAL. Furthermore, comparators A and C also compare the data buses to the data stored in DBGXDH, DBGXDL and allow masking of individual data bus bits.

S12X comparator matches are disabled in BDM and during BDM accesses.

The comparator match control logic configures comparators to monitor the buses for an exact address or an address range. The comparator configuration is controlled by the control register contents and the range control by the DBGC2 contents.

On a match a trigger can initiate a transition to another state sequencer state (see Section 6.4.3”). The comparator control register also allows the type of access to be included in the comparison through the use of the RWE, RW, SZE, and SZ bits. The RWE bit controls whether read or write comparison is enabled for the associated comparator and the RW bit selects either a read or write access for a valid match. Similarly the SZE and SZ bits allows the size of access (word or byte) to be considered in the compare. Only comparators B and D feature SZE and SZ.

The TAG bit in each comparator control register is used to determine the triggering condition. By setting TAG, the comparator will qualify a match with the output of opcode tracking logic and a trigger occurs before the tagged instruction executes (tagged-type trigger). Whilst tagging, the RW, RWE, SZE, and SZ bits are ignored and the comparator register must be loaded with the exact opcode address.

If the TAG bit is clear (forced type trigger) a comparator match is generated when the selected address appears on the system address bus. If the selected address is an opcode address, the match is generated

when the opcode is fetched from the memory. This precedes the instruction execution by an indefinite number of cycles due to instruction pipe lining. For a comparator match of an opcode at an odd address when TAG = 0, the corresponding even address must be contained in the comparator register. Thus for an opcode at odd address (n), the comparator register must contain address (n–1).

Once a successful comparator match has occurred, the condition that caused the original match is not verified again on subsequent matches. Thus if a particular data value is verified at a given address, this address may not still contain that data value when a subsequent match occurs.

Comparators C and D can also be used to select an address range to trace from. This is determined by the TRANGE bits in the DBGTCR register. The TRANGE encoding is shown in Table 6-9. If the TRANGE bits select a range definition using comparator D, then comparator D is configured for trace range definition and cannot be used for address bus comparisons. Similarly if the TRANGE bits select a range definition using comparator C, then comparator C is configured for trace range definition and cannot be used for address bus comparisons.

Match[0, 1, 2, 3] map directly to Comparators[A, B, C, D] respectively, except in range modes (see Section 6.3.2.4). Comparator priority rules are described in the trigger priority section (Section 6.4.3.4).

6.4.2.1 Exact Address Comparator Match (Comparators A and C)

With range comparisons disabled, the match condition is an exact equivalence of address/data bus with the value stored in the comparator address/data registers. Further qualification of the type of access (R/W, word/byte) is possible.

Comparators A and C do not feature SZE or SZ control bits, thus the access size is not compared. Table 6-37 lists access considerations without data bus compare. Table 6-36 lists access considerations with data bus comparison. To compare byte accesses DBGxDH must be loaded with the data byte, the low byte must be masked out using the DBGxDLM mask register. On word accesses the data byte of the lower address is mapped to DBGxDH.

Table 6-36. Comparator A and C Data Bus Considerations

Access	Address	DBGxDH	DBGxDL	DBGxDHM	DBGxDLM	Example Valid Match	
Word	ADDR[n]	Data[n]	Data[n+1]	$FF	$FF	MOVW #$WORD ADDR[n]	config1
Byte	ADDR[n]	Data[n]	x	$FF	$00	MOVB #$BYTE ADDR[n]	config2
Word	ADDR[n]	Data[n]	x	$FF	$00	MOVW #$WORD ADDR[n]	config2
Word	ADDR[n]	x	Data[n+1]	$00	$FF	MOVW #$WORD ADDR[n]	config3

Code may contain various access forms of the same address, i.e. a word access of ADDR[n] or byte access of ADDR[n+1] both access n+1. At a word access of ADDR[n], address ADDR[n+1] does not appear on the address bus and so cannot cause a comparator match if the comparator contains ADDR[n]. Thus it is not possible to monitor all data accesses of ADDR[n+1] with one comparator.

To detect an access of ADDR[n+1] through a word access of ADDR[n] the comparator can be configured to ADDR[n], DBGxDL is loaded with the data pattern and DBGxDHM is cleared so only the data[n+1] is compared on accesses of ADDR[n].

NOTE

Using this configuration, a byte access of ADDR[n] can cause a comparator match if the databus low byte by chance contains the same value as ADDR[n+1] because the databus comparator does not feature access size comparison and uses the mask as a “don’t care” function. Thus masked bits do not prevent a match.

Comparators A and C feature an NDB control bit to determine if a match occurs when the data bus differs to comparator register contents or when the data bus is equivalent to the comparator register contents.

6.4.2.2 Exact Address Comparator Match (Comparators B and D)

Comparators B and D feature SZ and SZE control bits. If SZE is clear, then the comparator address match qualification functions the same as for comparators A and C.

If the SZE bit is set the access size (word or byte) is compared with the SZ bit value such that only the specified type of access causes a match. Thus if configured for a byte access of a particular address, a word access covering the same address does not lead to match.

Table 6-37. Comparator Access Size Considerations

Comparator	Address	SZE	SZ8	Condition For Valid Match
Comparators A and C	ADDR[n]	—	—	Word and byte accesses of ADDR[n](1) MOVB #$BYTE ADDR[n] MOVW #$WORD ADDR[n]
Comparators B and D	ADDR[n]	0	X	Word and byte accesses of ADDR[n]1 MOVB #$BYTE ADDR[n] MOVW #$WORD ADDR[n]
Comparators B and D	ADDR[n]	1	0	Word accesses of ADDR[n]1 MOVW #$WORD ADDR[n]
Comparators B and D	ADDR[n]	1	1	Byte accesses of ADDR[n] MOVB #$BYTE ADDR[n]

1. A word access of ADDR[n-1] also accesses ADDR[n] but does not generate a match.
The comparator address register must contain the exact address used in the code.

6.4.2.3 Data Bus Comparison NDB Dependency

Comparators A and C each feature an NDB control bit, which allows data bus comparators to be configured to either trigger on equivalence or trigger on difference. This allows monitoring of a difference in the contents of an address location from an expected value.

When matching on an equivalence (NDB=0), each individual data bus bit position can be masked out by clearing the corresponding mask bit (DBGxDHM/DBGxDLM), so that it is ignored in the comparison. A match occurs when all data bus bits with corresponding mask bits set are equivalent. If all mask register bits are clear, then a match is based on the address bus only, the data bus is ignored.

When matching on a difference, mask bits can be cleared to ignore bit positions. A match occurs when any data bus bit with corresponding mask bit set is different. Clearing all mask bits, causes all bits to be ignored and prevents a match because no difference can be detected. In this case address bus equivalence does not cause a match.

Table 6-38. NDB and MASK bit dependency

NDB	DBGxDHM[n] / DBGxDLM[n]	Comment
0	0	Do not compare data bus bit.
0	1	Compare data bus bit. Match on equivalence.
1	0	Do not compare data bus bit.
1	1	Compare data bus bit. Match on difference.

6.4.2.4 Range Comparisons

When using the AB comparator pair for a range comparison, the data bus can also be used for qualification by using the comparator A data and data mask registers. Furthermore the DBGACTL RW and RWE bits can be used to qualify the range comparison on either a read or a write access. The corresponding DBGBCTL bits are ignored. Similarly when using the CD comparator pair for a range comparison, the data bus can also be used for qualification by using the comparator C data and data mask registers. Furthermore the DBGCCTL RW and RWE bits can be used to qualify the range comparison on either a read or a write access if tagging is not selected. The corresponding DBGDCTL bits are ignored. The SZE and SZ control bits are ignored in range mode. The comparator A and C TAG bits are used to tag range comparisons for the AB and CD ranges respectively. The comparator B and D TAG bits are ignored in range modes. In order for a range comparison using comparators A and B, both COMPEA and COMPEB must be set; to disable range comparisons both must be cleared. Similarly for a range CD comparison, both COMPEC and COMPED must be set. The comparator A and C BRK bits are used for the AB and CD ranges respectively, the comparator B and D BRK bits are ignored in range mode. When configured for range comparisons and tagging, the ranges are accurate only to word boundaries.

6.4.2.4.1 Inside Range (CompAC_Addr ≤ address ≤ CompBD_Addr)

In the Inside Range comparator mode, either comparator pair A and B or comparator pair C and D can be configured for range comparisons by the control register (DBGC2). The match condition requires that a valid match for both comparators happens on the same bus cycle. A match condition on only one comparator is not valid. An aligned word access which straddles the range boundary will cause a trigger only if the aligned address is inside the range.

6.4.2.4.2 Outside Range (address < CompAC_Addr or address > CompBD_Addr)

In the Outside Range comparator mode, either comparator pair A and B or comparator pair C and D can be configured for range comparisons. A single match condition on either of the comparators is recognized as valid. An aligned word access which straddles the range boundary will cause a trigger only if the aligned address is outside the range.

Outside range mode in combination with tagged triggers can be used to detect if the opcode fetches are from an unexpected range. In forced trigger modes the outside range trigger would typically be activated at any interrupt vector fetch or register access. This can be avoided by setting the upper or lower range limit to $7FFFFF or $000000 respectively. Interrupt vector fetches do not cause taghits

6.4.3 Trigger Modes

Trigger modes are used as qualifiers for a state sequencer change of state. The control logic determines the trigger mode and provides a trigger to the state sequencer. The individual trigger modes are described in the following sections.

6.4.3.1 Forced Trigger On Comparator Match

If a forced trigger comparator match occurs, the trigger immediately initiates a transition to the next state sequencer state whereby the corresponding flags in DBGSR are set. The state control register for the current state determines the next state for each trigger. Forced triggers are generated as soon as the matching address appears on the address bus, which in the case of opcode fetches occurs several cycles before the opcode execution. For this reason a forced trigger at an opcode address precedes a tagged trigger at the same address by several cycles.

6.4.3.2 Trigger On Comparator Related Taghit

If a CPU12X taghit occurs, a transition to another state sequencer state is initiated and the corresponding DBGSR flags are set. For a comparator related taghit to occur, the S12XDBG must first generate tags based on comparator matches. When the tagged instruction reaches the execution stage of the instruction queue a taghit is generated by the CPU12X. The state control register for the current state determines the next state for each trigger.

6.4.3.3 TRIG Immediate Trigger

Independent of comparator matches it is possible to initiate a tracing session and/or breakpoint by writing the TRIG bit in DBGC1 to a logic “1”. If configured for begin or mid aligned tracing, this triggers the state sequencer into the Final State, if configured for end alignment, setting the TRIG bit disarms the module, ending the session. If breakpoints are enabled, a forced breakpoint request is issued immediately (end alignment) or when tracing has completed (begin or mid alignment).

6.4.3.4 Trigger Priorities

In case of simultaneous triggers, the priority is resolved according to Table 6-39. The lower priority trigger is suppressed. It is thus possible to miss a lower priority trigger if it occurs simultaneously with a trigger of a higher priority. The trigger priorities described in Table 6-39 dictate that in the case of simultaneous matches, the match on the lower channel number (0,1,2,3) has priority. The SC[3:0] encoding ensures that a match leading to final state has priority over all other matches in each state sequencer state. When configured for range modes a simultaneous match of comparators A and C generates an active match0 whilst match2 is suppressed.

If a write access to DBGC1 with the ARM bit position set occurs simultaneously to a hardware disarm from an internal trigger event, then the ARM bit is cleared due to the hardware disarm.

Table 6-39. Trigger Priorities

Priority	Source	Action

Table 6-39. Trigger Priorities

Highest	**TRIG**	Trigger immediately to final state (begin or mid aligned tracing enabled) Trigger immediately to state 0 (end aligned or no tracing enabled)
	Match0 (force or tag hit)	Trigger to next state as defined by state control registers
	Match1 (force or tag hit)	Trigger to next state as defined by state control registers
	Match2 (force or tag hit)	Trigger to next state as defined by state control registers
Lowest	**Match3 (force or tag hit)**	Trigger to next state as defined by state control registers

6.4.4 State Sequence Control

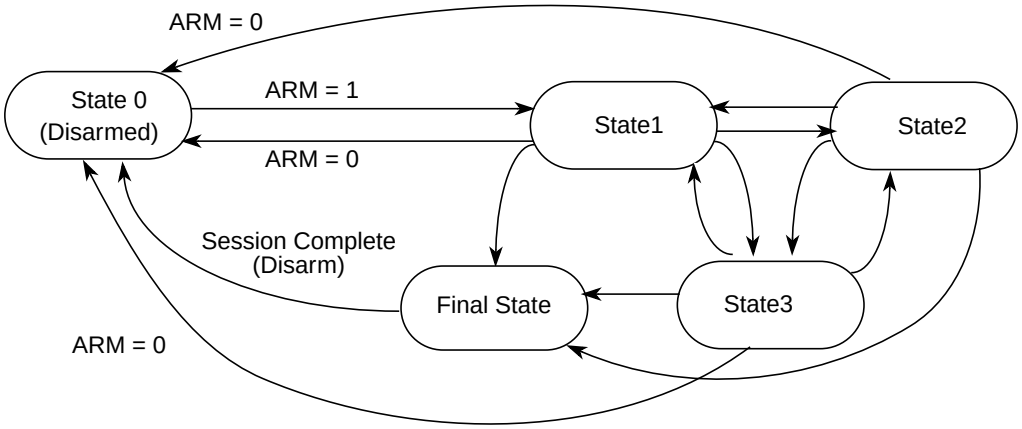

Figure 6-22. State Sequencer Diagram

The state sequencer allows a defined sequence of events to provide a trigger point for tracing of data in the trace buffer. Once the S12XDBG module has been armed by setting the ARM bit in the DBGC1 register, then state1 of the state sequencer is entered. Further transitions between the states are then controlled by the state control registers and depend upon a selected trigger mode condition being met. From Final State the only permitted transition is back to the disarmed state0. Transition between any of the states 1 to 3 is not restricted. Each transition updates the SSF[2:0] flags in DBGSR accordingly to indicate the current state.

Alternatively by setting the TRIG bit in DBGSC1, the state machine can be triggered to state0 or Final State depending on tracing alignment.

Independent of the state sequencer, each comparator channel can be individually configured to generate an immediate breakpoint when a match occurs through the use of the BRK bits in the DBGxCTL registers. Thus it is possible to generate an immediate breakpoint on selected channels, whilst a state sequencer transition can be initiated by a match on other channels. If a debug session is ended by a trigger on a channel with BRK = 1, the state sequencer transitions through Final State for a clock cycle to state0. This is independent of tracing and breakpoint activity, thus with tracing and breakpoints disabled, the state sequencer enters state0 and the debug module is disarmed.

6.4.4.1 Final State

On entering Final State a trigger may be issued to the trace buffer according to the trace position control as defined by the TALIGN field (see Section 6.3.2.3). If TSOURCE in the trace control register DBGTCR is cleared then the trace buffer is disabled and the transition to Final State can only generate a breakpoint request. In this case or upon completion of a tracing session when tracing is enabled, the ARM bit in the DBGC1 register is cleared, returning the module to the disarmed state0. If tracing is enabled, a breakpoint request can occur at the end of the tracing session. If neither tracing nor breakpoints are enabled then when the final state is reached it returns automatically to state0 and the debug module is disarmed.

6.4.5 Trace Buffer Operation

The trace buffer is a 64 lines deep by 64-bits wide RAM array. The S12XDBG module stores trace information in the RAM array in a circular buffer format. The RAM array can be accessed through a register window (DBGTBH:DBGTBL) using 16-bit wide word accesses. After each complete 64-bit trace buffer line is read, an internal pointer into the RAM is incremented so that the next read will receive fresh information. Data is stored in the format shown in Table 6-40. After each store the counter register bits DBGCNT[6:0] are incremented. Tracing of CPU12X activity is disabled when the BDM is active. Reading the trace buffer whilst the DBG is armed returns invalid data and the trace buffer pointer is not incremented.

6.4.5.1 Trace Trigger Alignment

Using the TALIGN bits (see Section 6.3.2.3) it is possible to align the trigger with the end, the middle, or the beginning of a tracing session.

If End or Mid tracing is selected, tracing begins when the ARM bit in DBGC1 is set and State1 is entered. The transition to Final State if End is selected signals the end of the tracing session. The transition to Final State if Mid is selected signals that another 32 lines will be traced before ending the tracing session. Tracing with Begin-Trigger starts at the opcode of the trigger.

6.4.5.1.1 Storing with Begin-Trigger

Storing with Begin-Trigger, data is not stored in the Trace Buffer until the Final State is entered. Once the trigger condition is met the S12XDBG module will remain armed until 64 lines are stored in the Trace Buffer. If the trigger is at the address of the change-of-flow instruction the change of flow associated with the trigger will be stored in the Trace Buffer. Using Begin-trigger together with tagging, if the tagged instruction is about to be executed then the trace is started. Upon completion of the tracing session the breakpoint is generated, thus the breakpoint does not occur at the tagged instruction boundary.

6.4.5.1.2 Storing with Mid-Trigger

Storing with Mid-Trigger, data is stored in the Trace Buffer as soon as the S12XDBG module is armed. When the trigger condition is met, another 32 lines will be traced before ending the tracing session, irrespective of the number of lines stored before the trigger occurred, then the S12XDBG module is disarmed and no more data is stored. Using Mid-trigger with tagging, if the tagged instruction is about to

be executed then the trace is continued for another 32 lines. Upon tracing completion the breakpoint is generated, thus the breakpoint does not occur at the tagged instruction boundary.

6.4.5.1.3 Storing with End-Trigger

Storing with End-Trigger, data is stored in the Trace Buffer until the Final State is entered, at which point the S12XDBG module will become disarmed and no more data will be stored. If the trigger is at the address of a change of flow instruction the trigger event will not be stored in the Trace Buffer.

6.4.5.2 Trace Modes

The S12XDBG module can operate in four trace modes. The mode is selected using the TRCMOD bits in the DBGTCR register. The modes are described in the following subsections. The trace buffer organization is shown in Table 6-40.

6.4.5.2.1 Normal Mode

In Normal Mode, change of flow (COF) program counter (PC) addresses will be stored.

COF addresses are defined as follows :

- Source address of taken conditional branches (long, short, bit-conditional, and loop primitives)
- Destination address of indexed JMP, JSR, and CALL instruction
- Destination address of RTI, RTS, and RTC instructions.
- Vector address of interrupts, except for SWI and BDM vectors

LBRA, BRA, BSR, BGND as well as non-indexed JMP, JSR, and CALL instructions are not classified as change of flow and are not stored in the trace buffer.

Change-of-flow addresses stored include the full 23-bit address bus of CPU12X and an information byte, which contains a source/destination bit to indicate whether the stored address was a source address or destination address.

NOTE

When an CPU12X COF instruction with destination address is executed, the destination address is stored to the trace buffer on instruction completion, indicating the COF has taken place. If an interrupt occurs simultaneously then the next instruction carried out is actually from the interrupt service routine. The instruction at the destination address of the original program flow gets exectuted after the interrupt service routine.

In the following example an IRQ interrupt occurs during execution of the indexed JMP at address MARK1. The BRN at the destination (SUB_1) is not executed until after the IRQ service routine but the destination address is entered into the trace buffer to indicate that the indexed JMP COF has taken place.

```
        LDX     #SUB_1
MARK1   JMP     0,X                     ; IRQ interrupt occurs during execution of this
MARK2   NOP                             ;
```

```
SUB_1    BRN     *                       ; JMP Destination address TRACE BUFFER ENTRY 1
                                         ; RTI Destination address TRACE BUFFER ENTRY 3
         NOP                             ;
ADDR1    DBNE    A,PART5                 ; Source address TRACE BUFFER ENTRY 4

IRQ_ISR  LDAB    #$F0                    ; IRQ Vector $FFF2 = TRACE BUFFER ENTRY 2
         STAB    VAR_C1
         RTI                             ;
```

The execution flow taking into account the IRQ is as follows

```
         LDX     #SUB_1
MARK1    JMP     0,X                     ;
IRQ_ISR  LDAB    #$F0                    ;
         STAB    VAR_C1
         RTI                             ;
SUB_1    BRN     *
         NOP                             ;
ADDR1    DBNE    A,PART5                 ;
```

6.4.5.2.2 Loop1 Mode

Loop1 Mode, similarly to Normal Mode also stores only COF address information to the trace buffer, it however allows the filtering out of redundant information.

The intent of Loop1 Mode is to prevent the Trace Buffer from being filled entirely with duplicate information from a looping construct such as delays using the DBNE instruction or polling loops using BRSET/BRCLR instructions. Immediately after address information is placed in the Trace Buffer, the S12XDBG module writes this value into a background register. This prevents consecutive duplicate address entries in the Trace Buffer resulting from repeated branches.

Loop1 Mode only inhibits consecutive duplicate source address entries that would typically be stored in most tight looping constructs. It does not inhibit repeated entries of destination addresses or vector addresses, since repeated entries of these would most likely indicate a bug in the user's code that the S12XDBG module is designed to help find.

6.4.5.2.3 Detail Mode

In Detail Mode, address and data for all memory and register accesses is stored in the trace buffer. This mode also features information byte entries to the trace buffer, for each address byte entry. The information byte indicates the size of access (word or byte) and the type of access (read or write).

When tracing CPU12X activity in Detail Mode, all cycles are traced except those when the CPU12X is either in a free or opcode fetch cycle, the address range can be limited to a range specified by the TRANGE bits in DBGTCR. This function uses comparators C and D to define an address range inside which CPU12X activity should be traced (see Table 6-40). Thus the traced CPU12X activity can be restricted to particular register range accesses.

6.4.5.2.4 Pure PC Mode

In Pure PC Mode, tracing from the CPU the PC addresses of all executed opcodes, including illegal opcodes, are stored.

6.4.5.3 Trace Buffer Organization

Referring to Table 6-40. ADRH, ADRM, ADRL denote address high, middle and low byte respectively. INF bytes contain control information (R/W, S/D etc.). The numerical suffix indicates which tracing step. The information format for Loop1 Mode and PurePC Mode is the same as that of Normal Mode. Whilst tracing in Normal or Loop1 modes each array line contains 2 data entries, thus in this case the DBGCNT[0] is incremented after each separate entry. In Detail mode DBGCNT[0] remains cleared whilst the other DBGCNT bits are incremented on each trace buffer entry.

When a COF occurs a trace buffer entry is made and the corresponding CDV bit is set.

Single byte data accesses in Detail Mode are always stored to the low byte of the trace buffer (CDATAL) and the high byte is cleared. When tracing word accesses, the byte at the lower address is always stored to trace buffer byte3 and the byte at the higher address is stored to byte2.

Table 6-40. Trace Buffer Organization

Mode	8-Byte Wide Word Buffer							
	7	6	5	4	3	2	1	0
S12XCPU Detail	CXINF1	CADRH1	CADRM1	CADRL1	CDATAH1	CDATAL1		
	CXINF2	CADRH2	CADRM2	CADRL2	CDATAH2	CDATAL2		
CPU12X Other Modes	CINF1	CPCH1	CPCM1	CPCL1	CINF0	CPCH0	CPCM0	CPCL0
	CINF3	CPCH3	CPCM3	CPCL3	CINF2	CPCH2	CPCM2	CPCL2

6.4.5.3.1 Information Byte Organization

The format of the control information byte is dependent upon the active trace mode as described below. In Normal, Loop1, or Pure PC modes tracing of CPU12X activity, CINF is used to store control information. In Detail Mode, CXINF contains the control information.

CPU12X Information Byte

Bit 7	Bit 6	Bit 5	Bit 4	Bit 3	Bit 2	Bit 1	Bit 0
CSD	CVA	0	CDV	0	0	0	0

Figure 6-23. CPU12X Information Byte CINF

Table 6-41. CINF Field Descriptions

Field	Description
7 CSD	**Source Destination Indicator** — This bit indicates if the corresponding stored address is a source or destination address. This is only used in Normal and Loop1 mode tracing. 0 Source address 1 Destination address
6 CVA	**Vector Indicator** — This bit indicates if the corresponding stored address is a vector address. Vector addresses are destination addresses, thus if CVA is set, then the corresponding CSD is also set. This is only used in Normal and Loop1 mode tracing. This bit has no meaning in Pure PC mode. 0 Indexed jump destination address 1 Vector destination address
4 CDV	**Data Invalid Indicator** — This bit indicates if the trace buffer entry is invalid. It is only used when tracing from both sources in Normal, Loop1 and Pure PC modes, to indicate that the CPU12X trace buffer entry is valid. 0 Trace buffer entry is invalid 1 Trace buffer entry is valid

CXINF Information Byte

Bit 7	Bit 6	Bit 5	Bit 4	Bit 3	Bit 2	Bit 1	Bit 0
	CSZ	CRW					

Figure 6-24. Information Byte CXINF

This describes the format of the information byte used only when tracing in Detail Mode. When tracing from the CPU12X in Detail Mode, information is stored to the trace buffer on all cycles except opcode fetch and free cycles. In this case the CSZ and CRW bits indicate the type of access being made by the CPU12X.

Table 6-42. CXINF Field Descriptions

Field	Description
6 CSZ	**Access Type Indicator** — This bit indicates if the access was a byte or word size access.This bit only contains valid information when tracing CPU12X activity in Detail Mode. 0 Word Access 1 Byte Access

Table 6-42. CXINF Field Descriptions (continued)

Field	Description
5 CRW	**Read Write Indicator** — This bit indicates if the corresponding stored address corresponds to a read or write access. This bit only contains valid information when tracing CPU12X activity in Detail Mode. 0 Write Access 1 Read Access

6.4.5.4 Reading Data from Trace Buffer

The data stored in the Trace Buffer can be read using either the background debug module (BDM) module or the CPU12X provided the S12XDBG module is not armed, is configured for tracing and the system not secured. When the ARM bit is written to 1 the trace buffer is locked to prevent reading. The trace buffer can only be unlocked for reading by an aligned word write to DBGTB when the module is disarmed.

The Trace Buffer can only be read through the DBGTB register using aligned word reads, any byte or misaligned reads return 0 and do not cause the trace buffer pointer to increment to the next trace buffer address. The Trace Buffer data is read out first-in first-out. By reading CNT in DBGCNT the number of valid 64-bit lines can be determined. DBGCNT will not decrement as data is read.

Whilst reading an internal pointer is used to determine the next line to be read. After a tracing session, the pointer points to the oldest data entry, thus if no overflow has occurred, the pointer points to line0, otherwise it points to the line with the oldest entry. The pointer is initialized by each aligned write to DBGTBH to point to the oldest data again. This enables an interrupted trace buffer read sequence to be easily restarted from the oldest data entry.

The least significant word of each 64-bit wide array line is read out first. This corresponds to the bytes 1 and 0 of Table 6-40. The bytes containing invalid information (shaded in Table 6-40) are also read out.

Reading the Trace Buffer while the S12XDBG module is armed will return invalid data and no shifting of the RAM pointer will occur.

6.4.5.5 Trace Buffer Reset State

The Trace Buffer contents are not initialized by a system reset. Thus should a system reset occur, the trace session information from immediately before the reset occurred can be read out. The DBGCNT bits are not cleared by a system reset. Thus should a reset occur, the number of valid lines in the trace buffer is indicated by DBGCNT. The internal pointer to the current trace buffer address is initialized by unlocking the trace buffer thus points to the oldest valid data even if a reset occurred during the tracing session. Generally debugging occurrences of system resets is best handled using mid or end trigger alignment since the reset may occur before the trace trigger, which in the begin trigger alignment case means no information would be stored in the trace buffer.

NOTE

An external pin RESET that occurs simultaneous to a trace buffer entry can, in very seldom cases, lead to either that entry being corrupted or the first entry of the session being corrupted. In such cases the other contents of the trace buffer still contain valid tracing information. The case occurs when the reset assertion coincides with the trace buffer entry clock edge.

6.4.6 Tagging

A tag follows program information as it advances through the instruction queue. When a tagged instruction reaches the head of the queue a tag hit occurs and triggers the state sequencer.

Each comparator control register features a TAG bit, which controls whether the comparator match will cause a trigger immediately or tag the opcode at the matched address. If a comparator is enabled for tagged comparisons, the address stored in the comparator match address registers must be an opcode address for the trigger to occur.

Using Begin trigger together with tagging, if the tagged instruction is about to be executed then the transition to the next state sequencer state occurs. If the transition is to the Final State, tracing is started. Only upon completion of the tracing session can a breakpoint be generated. Similarly using Mid trigger with tagging, if the tagged instruction is about to be executed then the trace is continued for another 32 lines. Upon tracing completion the breakpoint is generated. Using End trigger, when the tagged instruction is about to be executed and the next transition is to Final State then a breakpoint is generated immediately, before the tagged instruction is carried out.

Read/Write (R/W), access size (SZ) monitoring and data bus monitoring is not useful if tagged triggering is selected, since the tag is attached to the opcode at the matched address and is not dependent on the data bus nor on the type of access. Thus these bits are ignored if tagged triggering is selected.

When configured for range comparisons and tagging, the ranges are accurate only to word boundaries.

S12X tagging is disabled when the BDM becomes active.

6.4.7 Breakpoints

Breakpoints can be generated as follows.

- From comparator channel triggers to final state.
- Using software to write to the TRIG bit in the DBGC1 register.

Breakpoints generated via the BDM BACKGROUND command have no affect on the CPU12X in STOP or WAIT mode.

6.4.7.1 Breakpoints From Internal Comparator Channel Final State Triggers

Breakpoints can be generated when internal comparator channels trigger the state sequencer to the Final State. If configured for tagging, then the breakpoint is generated when the tagged opcode reaches the execution stage of the instruction queue.

If a tracing session is selected by TSOURCE, breakpoints are requested when the tracing session has completed, thus if Begin or Mid aligned triggering is selected, the breakpoint is requested only on completion of the subsequent trace (see Table 6-43). If no tracing session is selected, breakpoints are requested immediately.

If the BRK bit is set on the triggering channel, then the breakpoint is generated immediately independent of tracing trigger alignment.

Table 6-43. Breakpoint Setup

BRK	TALIGN	DBGBRK	Breakpoint Alignment
0	00	0	Fill Trace Buffer until trigger (no breakpoints — keep running)
0	00	1	Fill Trace Buffer until trigger, then breakpoint request occurs
0	01	0	Start Trace Buffer at trigger (no breakpoints — keep running)
0	01	1	Start Trace Buffer at trigger A breakpoint request occurs when Trace Buffer is full
0	10	0	Store a further 32 Trace Buffer line entries after trigger (no breakpoints — keep running)
0	10	1	Store a further 32 Trace Buffer line entries after trigger Request breakpoint after the 32 further Trace Buffer entries
1	00,01,10	1	Terminate tracing and generate breakpoint immediately on trigger
1	00,01,10	0	Terminate tracing immediately on trigger
x	11	x	Reserved

6.4.7.2 Breakpoints Generated Via The TRIG Bit

If a TRIG triggers occur, the Final State is entered. If a tracing session is selected by TSOURCE, breakpoints are requested when the tracing session has completed, thus if Begin or Mid aligned triggering is selected, the breakpoint is requested only on completion of the subsequent trace (see Table 6-43). If no tracing session is selected, breakpoints are requested immediately. TRIG breakpoints are possible even if the S12XDBG module is disarmed.

6.4.7.3 S12XDBG Breakpoint Priorities

If a TRIG trigger occurs after Begin or Mid aligned tracing has already been triggered by a comparator instigated transition to Final State, then TRIG no longer has an effect. When the associated tracing session is complete, the breakpoint occurs. Similarly if a TRIG is followed by a subsequent trigger from a comparator channel, it has no effect, since tracing has already started.

6.4.7.3.1 S12XDBG Breakpoint Priorities And BDM Interfacing

Breakpoint operation is dependent on the state of the S12XBDM module. If the S12XBDM module is active, the CPU12X is executing out of BDM firmware and S12X breakpoints are disabled. In addition, while executing a BDM TRACE command, tagging into BDM is disabled. If BDM is not active, the breakpoint will give priority to BDM requests over SWI requests if the breakpoint coincides with a SWI instruction in the user's code. On returning from BDM, the SWI from user code gets executed.

Table 6-44. Breakpoint Mapping Summary

DBGBRK (DBGC1[3])	BDM Bit (DBGC1[4])	BDM Enabled	BDM Active	S12X Breakpoint Mapping
0	X	X	X	No Breakpoint
1	0	X	0	Breakpoint to SWI
1	0	X	1	No Breakpoint

Table 6-44. Breakpoint Mapping Summary

1	1	0	X	Breakpoint to SWI
1	1	1	0	Breakpoint to BDM
1	1	1	1	No Breakpoint

BDM cannot be entered from a breakpoint unless the ENABLE bit is set in the BDM. If entry to BDM via a BGND instruction is attempted and the ENABLE bit in the BDM is cleared, the CPU12X actually executes the BDM firmware code. It checks the ENABLE and returns if ENABLE is not set. If not serviced by the monitor then the breakpoint is re-asserted when the BDM returns to normal CPU12X flow.

If the comparator register contents coincide with the SWI/BDM vector address then an SWI in user code and DBG breakpoint could occur simultaneously. The CPU12X ensures that BDM requests have a higher priority than SWI requests. Returning from the BDM/SWI service routine care must be taken to avoid re triggering a breakpoint.

NOTE

When program control returns from a tagged breakpoint using an RTI or BDM GO command without program counter modification it will return to the instruction whose tag generated the breakpoint. To avoid re triggering a breakpoint at the same location reconfigure the S12XDBG module in the SWI routine, if configured for an SWI breakpoint, or over the BDM interface by executing a TRACE command before the GO to increment the program flow past the tagged instruction.

Chapter 7
Security (S12XS9SECV2)

Table 7-1. Revision History

Version Number	Revision Date	Effective Date	Author	Description of Changes
02.00	27 Aug 2004	08 Sep 2004		reviewed and updated for S12XD architecture
02.01	21 Feb 2007	21 Feb 2007		added S12XE, S12XF and S12XS architectures
02.02	19 Apr 2007	19 Apr 2007		corrected statement about Backdoor key access via BDM on XE, XF, XS

7.1 Introduction

This specification describes the function of the security mechanism in the S12XS chip family (9SEC).

NOTE

No security feature is absolutely secure. However, Freescale's strategy is to make reading or copying the FLASH and/or EEPROM difficult for unauthorized users.

7.1.1 Features

The user must be reminded that part of the security must lie with the application code. An extreme example would be application code that dumps the contents of the internal memory. This would defeat the purpose of security. At the same time, the user may also wish to put a backdoor in the application program. An example of this is the user downloads a security key through the SCI, which allows access to a programming routine that updates parameters stored in another section of the Flash memory.

The security features of the S12XS chip family (in secure mode) are:

- Protect the content of non-volatile memories (Flash, EEPROM)
- Execution of NVM commands is restricted
- Disable access to internal memory via background debug module (BDM)

Table 7-2 gives an overview over availability of security relevant features in unsecure and secure modes.

Table 7-2. Feature Availability in Unsecure and Secure Modes on S12XS

	Unsecure Mode						Secure Mode					
	NS	SS	NX	ES	EX	ST	NS	SS	NX	ES	EX	ST
Flash Array Access	✔	✔					✔	✔				

Table 7-2. Feature Availability in Unsecure and Secure Modes on S12XS

	Unsecure Mode						Secure Mode					
	NS	SS	NX	ES	EX	ST	NS	SS	NX	ES	EX	ST
EEPROM Array Access	✔	✔					✔	✔				
NVM Commands	✔[1]	✔					✔[1]	✔[1]				
BDM	✔	✔					—	✔[2]				
DBG Module Trace	✔	✔					—	—				

1 Restricted NVM command set only. Please refer to the NVM wrapper block guides for detailed information.

2 BDM hardware commands restricted to peripheral registers only.

7.1.2 Modes of Operation

7.1.3 Securing the Microcontroller

Once the user has programmed the Flash and EEPROM, the chip can be secured by programming the security bits located in the options/security byte in the Flash memory array. These non-volatile bits will keep the device secured through reset and power-down.

The options/security byte is located at address 0xFF0F (= global address 0x7F_FF0F) in the Flash memory array. This byte can be erased and programmed like any other Flash location. Two bits of this byte are used for security (SEC[1:0]). On devices which have a memory page window, the Flash options/security byte is also available at address 0xBF0F by selecting page 0x3F with the PPAGE register. The contents of this byte are copied into the Flash security register (FSEC) during a reset sequence.

	7	6	5	4	3	2	1	0
0xFF0F	KEYEN1	KEYEN0	NV5	NV4	NV3	NV2	SEC1	SEC0

Figure 7-1. Flash Options/Security Byte

The meaning of the bits KEYEN[1:0] is shown in Table 7-3. Please refer to Section 7.1.5.1, “Unsecuring the MCU Using the Backdoor Key Access” for more information.

Table 7-3. Backdoor Key Access Enable Bits

KEYEN[1:0]	Backdoor Key Access Enabled
00	0 (disabled)
01	0 (disabled)
10	1 (enabled)
11	0 (disabled)

The meaning of the security bits SEC[1:0] is shown in Table 7-4. For security reasons, the state of device security is controlled by two bits. To put the device in unsecured mode, these bits must be programmed to

SEC[1:0] = ‘10’. All other combinations put the device in a secured mode. The recommended value to put the device in secured state is the inverse of the unsecured state, i.e. SEC[1:0] = ‘01’.

Table 7-4. Security Bits

SEC[1:0]	Security State
00	1 (secured)
01	1 (secured)
10	***0 (unsecured)***
11	1 (secured)

NOTE

Please refer to the Flash block guide for actual security configuration (in section “Flash Module Security”).

7.1.4 Operation of the Secured Microcontroller

By securing the device, unauthorized access to the EEPROM and Flash memory contents can be prevented. However, it must be understood that the security of the EEPROM and Flash memory contents also depends on the design of the application program. For example, if the application has the capability of downloading code through a serial port and then executing that code (e.g. an application containing bootloader code), then this capability could potentially be used to read the EEPROM and Flash memory contents even when the microcontroller is in the secure state. In this example, the security of the application could be enhanced by requiring a challenge/response authentication before any code can be downloaded.

Secured operation has the following effects on the microcontroller:

7.1.4.1 Normal Single Chip Mode (NS)

- Background debug module (BDM) operation is completely disabled.
- Execution of Flash and EEPROM commands is restricted. Please refer to the NVM block guide for details.
- Tracing code execution using the DBG module is disabled.

7.1.4.2 Special Single Chip Mode (SS)

- BDM firmware commands are disabled.
- BDM hardware commands are restricted to the register space.
- Execution of Flash and EEPROM commands is restricted. Please refer to the NVM block guide for details.
- Tracing code execution using the DBG module is disabled.

Special single chip mode means BDM is active after reset. The availability of BDM firmware commands depends on the security state of the device. The BDM secure firmware first performs a blank check of both the Flash memory and the EEPROM. If the blank check succeeds, security will be temporarily turned off and the state of the security bits in the appropriate Flash memory location can be changed If the blank check fails, security will remain active, only the BDM hardware commands will be enabled, and the accessible memory space is restricted to the peripheral register area. This will allow the BDM to be used to erase the EEPROM and Flash memory without giving access to their contents. After erasing both Flash memory and EEPROM, another reset into special single chip mode will cause the blank check to succeed and the options/security byte can be programmed to “unsecured” state via BDM.

While the BDM is executing the blank check, the BDM interface is completely blocked, which means that all BDM commands are temporarily blocked.

7.1.5 Unsecuring the Microcontroller

Unsecuring the microcontroller can be done by three different methods:

1. Backdoor key access
2. Reprogramming the security bits
3. Complete memory erase (special modes)

7.1.5.1 Unsecuring the MCU Using the Backdoor Key Access

In normal modes (single chip and expanded), security can be temporarily disabled using the backdoor key access method. This method requires that:

- The backdoor key at 0xFF00–0xFF07 (= global addresses 0x7F_FF00–0x7F_FF07) has been programmed to a valid value.
- The KEYEN[1:0] bits within the Flash options/security byte select ‘enabled’.
- In single chip mode, the application program programmed into the microcontroller must be designed to have the capability to write to the backdoor key locations.

The backdoor key values themselves would not normally be stored within the application data, which means the application program would have to be designed to receive the backdoor key values from an external source (e.g. through a serial port).

The backdoor key access method allows debugging of a secured microcontroller without having to erase the Flash. This is particularly useful for failure analysis.

NOTE

No word of the backdoor key is allowed to have the value 0x0000 or 0xFFFF.

7.1.6 Reprogramming the Security Bits

In normal single chip mode (NS), security can also be disabled by erasing and reprogramming the security bits within Flash options/security byte to the unsecured value. Because the erase operation will erase the entire sector from 0xFE00–0xFFFF (0x7F_FE00–0x7F_FFFF), the backdoor key and the interrupt vectors will also be erased; this method is not recommended for normal single chip mode. The application software can only erase and program the Flash options/security byte if the Flash sector containing the Flash options/security byte is not protected (see Flash protection). Thus Flash protection is a useful means of preventing this method. The microcontroller will enter the unsecured state after the next reset following the programming of the security bits to the unsecured value.

This method requires that:

- The application software previously programmed into the microcontroller has been designed to have the capability to erase and program the Flash options/security byte, or security is first disabled using the backdoor key method, allowing BDM to be used to issue commands to erase and program the Flash options/security byte.
- The Flash sector containing the Flash options/security byte is not protected.

7.1.7 Complete Memory Erase (Special Modes)

The microcontroller can be unsecured in special modes by erasing the entire EEPROM and Flash memory contents.

When a secure microcontroller is reset into special single chip mode (SS), the BDM firmware verifies whether the EEPROM and Flash memory are erased. If any EEPROM or Flash memory address is not erased, only BDM hardware commands are enabled. BDM hardware commands can then be used to write to the EEPROM and Flash registers to mass erase the EEPROM and all Flash memory blocks.

When next reset into special single chip mode, the BDM firmware will again verify whether all EEPROM and Flash memory are erased, and this being the case, will enable all BDM commands, allowing the Flash options/security byte to be programmed to the unsecured value. The security bits SEC[1:0] in the Flash security register will indicate the unsecure state following the next reset.

Chapter 8
S12XE Clocks and Reset Generator (S12XECRGV1)

Table 8-1. Revision History

Revision Number	Revision Date	Sections Affected	Description of Changes
V01.00	26 Oct. 2005		Initial release
V01.01	02 Nov 2006	8.4.1.1/8-254	Table “Examples of IPLL Divider settings”: corrected $32 to $31
V01.02	4 Mar. 2008	8.4.1.4/8-257 8.4.3.3/8-261	Corrected details
V01.03	1 Sep. 2008	Table 8-14	added 100MHz example for PLL
V01.04	20 Nov. 2008	8.3.2.4/8-243	S12XECRG Flags Register: corrected address to Module Base + 0x0003
V01.05	19. Sep 2009	8.5.1/8-263	Modified Note below Table 8-17./8-263
V01.06	18. Sep 2012	Table 8-14 8.5.1	Added footnote concerning maximum clock frequencies to table Removed redundant examples from table Replaced reference to MMC documentation

8.1 Introduction

This specification describes the function of the Clocks and Reset Generator (S12XECRG).

8.1.1 Features

The main features of this block are:

- Phase Locked Loop (IPLL) frequency multiplier with internal filter
  - Reference divider
  - Post divider
  - Configurable internal filter (no external pin)
  - Optional frequency modulation for defined jitter and reduced emission
  - Automatic frequency lock detector
  - Interrupt request on entry or exit from locked condition
  - Self Clock Mode in absence of reference clock
- System Clock Generator
  - Clock Quality Check
  - User selectable fast wake-up from Stop in Self-Clock Mode for power saving and immediate program execution
  - Clock switch for either Oscillator or PLL based system clocks
- Computer Operating Properly (COP) watchdog timer with time-out clear window.

- System Reset generation from the following possible sources:
  - Power on reset
  - Low voltage reset
  - Illegal address reset
  - COP reset
  - Loss of clock reset
  - External pin reset
- Real-Time Interrupt (RTI)

8.1.2 Modes of Operation

This subsection lists and briefly describes all operating modes supported by the S12XECRG.

- Run Mode

  All functional parts of the S12XECRG are running during normal Run Mode. If RTI or COP functionality is required the individual bits of the associated rate select registers (COPCTL, RTICTL) have to be set to a non zero value.
- Wait Mode

  In this mode the IPLL can be disabled automatically depending on the PLLWAI bit.
- Stop Mode

  Depending on the setting of the PSTP bit Stop Mode can be differentiated between Full Stop Mode (PSTP = 0) and Pseudo Stop Mode (PSTP = 1).
  - Full Stop Mode

    The oscillator is disabled and thus all system and core clocks are stopped. The COP and the RTI remain frozen.
  - Pseudo Stop Mode

    The oscillator continues to run and most of the system and core clocks are stopped. If the respective enable bits are set the COP and RTI will continue to run, else they remain frozen.
- Self Clock Mode

  Self Clock Mode will be entered if the Clock Monitor Enable Bit (CME) and the Self Clock Mode Enable Bit (SCME) are both asserted and the clock monitor in the oscillator block detects a loss of clock. As soon as Self Clock Mode is entered the S12XECRG starts to perform a clock quality check. Self Clock Mode remains active until the clock quality check indicates that the required quality of the incoming clock signal is met (frequency and amplitude). Self Clock Mode should be used for safety purposes only. It provides reduced functionality to the MCU in case a loss of clock is causing severe system conditions.

8.1.3 Block Diagram

Figure 8-1 shows a block diagram of the S12XECRG.

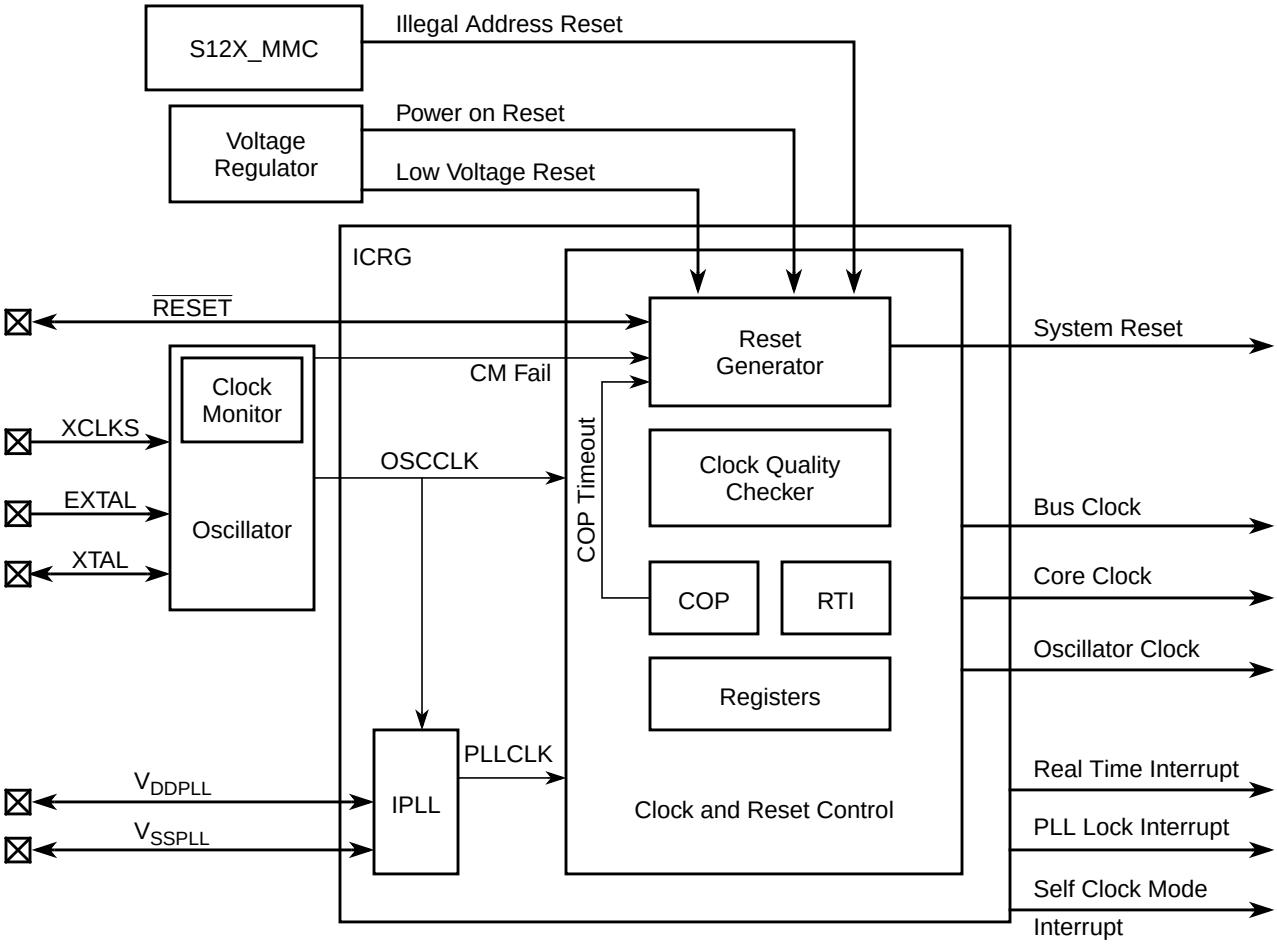

Figure 8-1. Block diagram of S12XECRG

8.2 Signal Description

This section lists and describes the signals that connect off chip.

8.2.1 V_{DDPLL}, V_{SSPLL}

These pins provides operating voltage (V_{DDPLL}) and ground (V_{SSPLL}) for the IPLL circuitry. This allows the supply voltage to the IPLL to be independently bypassed. Even if IPLL usage is not required V_{DDPLL} and V_{SSPLL} must be connected to properly.

8.2.2 $\overline{\text{RESET}}$

$\overline{\text{RESET}}$ is an active low bidirectional reset pin. As an input it initializes the MCU asynchronously to a known start-up state. As an open-drain output it indicates that an system reset (internal to MCU) has been triggered.

8.3 Memory Map and Registers

This section provides a detailed description of all registers accessible in the S12XECRG.

8.3.1 Module Memory Map

Figure 8-2 gives an overview on all S12XECRG registers.

Address	Name		Bit 7	6	5	4	3	2	1	Bit 0
0x0000	SYNR	R/W	VCOFRQ[1:0]		SYNDIV[5:0]					
0x0001	REFDV	R/W	REFFRQ[1:0]		REFDIV[5:0]					
0x0002	POSTDIV	R	0	0	0	POSTDIV[4:0]				
		W								
0x0003	CRGFLG	R	RTIF	PORF	LVRF	LOCKIF	LOCK	ILAF	SCMIF	SCM
		W								
0x0004	CRGINT	R	RTIE	0	0	LOCKIE	0	0	SCMIE	0
		W								
0x0005	CLKSEL	R	PLLSEL	PSTP	XCLKS	0	PLLWAI	0	RTIWAI	COPWAI
		W								
0x0006	PLLCTL	R/W	CME	PLLON	FM1	FM0	FSTWKP	PRE	PCE	SCME
0x0007	RTICTL	R/W	RTDEC	RTR6	RTR5	RTR4	RTR3	RTR2	RTR1	RTR0
0x0008	COPCTL	R	WCOP	RSBCK	0	0	0	CR2	CR1	CR0
		W			WRTMASK					
0x0009	FORBYP[2]	R	0	0	0	0	0	0	0	0
		W								
0x000A	CTCTL[2]	R	0	0	0	0	0	0	0	0
		W								
0x000B	ARMCOP	R	0	0	0	0	0	0	0	0
		W	Bit 7	Bit 6	Bit 5	Bit 4	Bit 3	Bit 2	Bit 1	Bit 0

2. FORBYP and CTCTL are intended for factory test purposes only.

= Unimplemented or Reserved

Figure 8-2. CRG Register Summary

NOTE

Register Address = Base Address + Address Offset, where the Base Address is defined at the MCU level and the Address Offset is defined at the module level.

8.3.2 Register Descriptions

This section describes in address order all the S12XECRG registers and their individual bits.

8.3.2.1 S12XECRG Synthesizer Register (SYNR)

The SYNR register controls the multiplication factor of the IPLL and selects the VCO frequency range.

Module Base + 0x0000

	7	6	5	4	3	2	1	0
R/W	VCOFRQ[1:0]		SYNDIV[5:0]					
Reset	0	0	0	0	0	0	0	0

Figure 8-3. S12XECRG Synthesizer Register (SYNR)

Read: Anytime

Write: Anytime except if PLLSEL = 1

NOTE

Write to this register initializes the lock detector bit.

$$f_{VCO} = 2 \times f_{OSC} \times \frac{(SYNDIV + 1)}{(REFDIV + 1)}$$

$$f_{PLL} = \frac{f_{VCO}}{2 \times POSTDIV}$$

$$f_{BUS} = \frac{f_{PLL}}{2}$$

NOTE

f_{VCO} must be within the specified VCO frequency lock range. $F._{BUS}$ (Bus Clock) must not exceed the specified maximum. If POSTDIV = $00 then f_{PLL} is same as f_{VCO} (divide by one).

The VCOFRQ[1:0] bit are used to configure the VCO gain for optimal stability and lock time. For correct IPLL operation the VCOFRQ[1:0] bits have to be selected according to the actual target VCOCLK frequency as shown in Table 8-2. Setting the VCOFRQ[1:0] bits wrong can result in a non functional IPLL (no locking and/or insufficient stability).

Table 8-2. VCO Clock Frequency Selection

VCOCLK Frequency Ranges	VCOFRQ[1:0]
32MHz <= f_{VCO}<= 48MHz	00
48MHz < f_{VCO}<= 80MHz	01
Reserved	10
80MHz < f_{VCO} <= 120MHz	11

8.3.2.2 S12XECRG Reference Divider Register (REFDV)

The REFDV register provides a finer granularity for the IPLL multiplier steps.

Module Base + 0x0001

	7	6	5	4	3	2	1	0
R W	REFFRQ[1:0]		REFDIV[5:0]					
Reset	0	0	0	0	0	0	0	0

Figure 8-4. S12XECRG Reference Divider Register (REFDV)

Read: Anytime

Write: Anytime except when PLLSEL = 1

NOTE

Write to this register initializes the lock detector bit.

$$f_{REF} = \frac{f_{OSC}}{(REFDIV + 1)}$$

The REFFRQ[1:0] bit are used to configure the internal PLL filter for optimal stability and lock time. For correct IPLL operation the REFFRQ[1:0] bits have to be selected according to the actual REFCLK frequency as shown in Figure 8-3. Setting the REFFRQ[1:0] bits wrong can result in a non functional IPLL (no locking and/or insufficient stability).

Table 8-3. Reference Clock Frequency Selection

REFCLK Frequency Ranges	REFFRQ[1:0]
1MHz <= f_{REF} <= 2MHz	00
2MHz < f_{REF} <= 6MHz	01
6MHz < f_{REF} <= 12MHz	10
f_{REF} >12MHz	11

8.3.2.3 S12XECRG Post Divider Register (POSTDIV)

The POSTDIV register controls the frequency ratio between the VCOCLK and PLLCLK. The count in the final divider divides VCOCLK frequency by 1 or 2*POSTDIV. Note that if POSTDIV = $00 f_{PLL}= f_{VCO} (divide by one).

Module Base + 0x0002

	7	6	5	4	3	2	1	0
R	0	0	0	POSTDIV[4:0]				
W								
Reset	0	0	0	0	0	0	0	0

= Unimplemented or Reserved

Figure 8-5. S12XECRG Post Divider Register (POSTDIV)

Read: Anytime

Write: Anytime except if PLLSEL = 1

$$f_{PLL} = \frac{f_{VCO}}{(2xPOSTDIV)}$$

NOTE

If POSTDIV = $00 then f_{PLL} is identical to f_{VCO} (divide by one).

8.3.2.4 S12XECRG Flags Register (CRGFLG)

This register provides S12XECRG status bits and flags.

Module Base + 0x0003

	7	6	5	4	3	2	1	0
R	RTIF	PORF	LVRF	LOCKIF	LOCK	ILAF	SCMIF	SCM
W								
Reset	0	Note 1	Note 2	Note 3	0	0	0	0

1. PORF is set to 1 when a power on reset occurs. Unaffected by system reset.
2. LVRF is set to 1 when a low voltage reset occurs. Unaffected by system reset.
3. ILAF is set to 1 when an illegal address reset occurs. Unaffected by system reset. Cleared by power on or low voltage reset.

= Unimplemented or Reserved

Figure 8-6. S12XECRG Flags Register (CRGFLG)

Read: Anytime

Write: Refer to each bit for individual write conditions

Table 8-4. CRGFLG Field Descriptions

Field	Description
7 RTIF	**Real Time Interrupt Flag** — RTIF is set to 1 at the end of the RTI period. This flag can only be cleared by writing a 1. Writing a 0 has no effect. If enabled (RTIE=1), RTIF causes an interrupt request. 0 RTI time-out has not yet occurred. 1 RTI time-out has occurred.
6 PORF	**Power on Reset Flag** — PORF is set to 1 when a power on reset occurs. This flag can only be cleared by writing a 1. Writing a 0 has no effect. 0 Power on reset has not occurred. 1 Power on reset has occurred.
5 LVRF	**Low Voltage Reset Flag** — LVRF is set to 1 when a low voltage reset occurs. This flag can only be cleared by writing a 1. Writing a 0 has no effect. 0 Low voltage reset has not occurred. 1 Low voltage reset has occurred.
4 LOCKIF	IPLL **Lock Interrupt Flag** — LOCKIF is set to 1 when LOCK status bit changes. This flag can only be cleared by writing a 1. Writing a 0 has no effect.If enabled (LOCKIE=1), LOCKIF causes an interrupt request. 0 No change in LOCK bit. 1 LOCK bit has changed.
3 LOCK	**Lock Status Bit** — LOCK reflects the current state of IPLL lock condition. This bit is cleared in Self Clock Mode. Writes have no effect. 0 VCOCLK is not within the desired tolerance of the target frequency. 1 VCOCLK is within the desired tolerance of the target frequency.
2 ILAF	**Illegal Address Reset Flag** — ILAF is set to 1 when an illegal address reset occurs. Refer to S12XMMC Block Guide for details. This flag can only be cleared by writing a 1. Writing a 0 has no effect. 0 Illegal address reset has not occurred. 1 Illegal address reset has occurred.
1 SCMIF	**Self Clock Mode Interrupt Flag** — SCMIF is set to 1 when SCM status bit changes. This flag can only be cleared by writing a 1. Writing a 0 has no effect. If enabled (SCMIE=1), SCMIF causes an interrupt request. 0 No change in SCM bit. 1 SCM bit has changed.
0 SCM	**Self Clock Mode Status Bit** — SCM reflects the current clocking mode. Writes have no effect. 0 MCU is operating normally with OSCCLK available. 1 MCU is operating in Self Clock Mode with OSCCLK in an unknown state. All clocks are derived from PLLCLK running at its minimum frequency f_{SCM}.

8.3.2.5 S12XECRG Interrupt Enable Register (CRGINT)

This register enables S12XECRG interrupt requests.

Module Base + 0x0004

	7	6	5	4	3	2	1	0
R	RTIE	0	0	LOCKIE	0	0	SCMIE	0
W								
Reset	0	0	0	0	0	0	0	0

= Unimplemented or Reserved

Figure 8-7. S12XECRG Interrupt Enable Register (CRGINT)

Read: Anytime

Write: Anytime

Table 8-5. CRGINT Field Descriptions

Field	Description
7 RTIE	**Real Time Interrupt Enable Bit** 0 Interrupt requests from RTI are disabled. 1 Interrupt will be requested whenever RTIF is set.
4 LOCKIE	**Lock Interrupt Enable Bit** 0 LOCK interrupt requests are disabled. 1 Interrupt will be requested whenever LOCKIF is set.
1 SCMIE	**Self Clock Mode Interrupt Enable Bit** 0 SCM interrupt requests are disabled. 1 Interrupt will be requested whenever SCMIF is set.

8.3.2.6 S12XECRG Clock Select Register (CLKSEL)

This register controls S12XECRG clock selection. Refer toFigure 8-16 for more details on the effect of each bit.

Module Base + 0x0005

	7	6	5	4	3	2	1	0
R	PLLSEL	PSTP	XCLKS	0	PLLWAI	0	RTIWAI	COPWAI
W								
Reset	0	0	0	0	0	0	0	0

= Unimplemented or Reserved

Figure 8-8. S12XECRG Clock Select Register (CLKSEL)

Read: Anytime

Write: Refer to each bit for individual write conditions

Table 8-6. CLKSEL Field Descriptions

Field	Description
7 PLLSEL	**PLL Select Bit** Write: Anytime. Writing a one when LOCK=0 has no effect. This prevents the selection of an unstable PLLCLK as SYSCLK. PLLSEL bit is cleared when the MCU enters Self Clock Mode, Stop Mode or Wait Mode with PLLWAI bit set. **It is recommended to read back the PLLSEL bit to make sure PLLCLK has really been selected as SYSCLK, as LOCK status bit could theoretically change at the very moment writing the PLLSEL bit.** 0 System clocks are derived from OSCCLK ($f_{BUS} = f_{OSC} / 2$). 1 System clocks are derived from PLLCLK ($f_{BUS} = f_{PLL} / 2$).
6 PSTP	**Pseudo Stop Bit** Write: Anytime This bit controls the functionality of the oscillator during Stop Mode. 0 Oscillator is disabled in Stop Mode. 1 Oscillator continues to run in Stop Mode (Pseudo Stop). **Note:** Pseudo Stop Mode allows for faster STOP recovery and reduces the mechanical stress and aging of the resonator in case of frequent STOP conditions at the expense of a slightly increased power consumption.
5 XCLKS	**Oscillator Configuration Status Bit** — This read-only bit shows the oscillator configuration status. 0 Loop controlled Pierce Oscillator is selected. 1 External clock / full swing Pierce Oscillator is selected.
3 PLLWAI	**PLL Stops in Wait Mode Bit** Write: Anytime If PLLWAI is set, the S12XECRG will clear the PLLSEL bit before entering Wait Mode. The PLLON bit remains set during Wait Mode but the IPLL is powered down. Upon exiting Wait Mode, the PLLSEL bit has to be set manually if PLL clock is required. 0 IPLL keeps running in Wait Mode. 1 IPLL stops in Wait Mode.
1 RTIWAI	**RTI Stops in Wait Mode Bit** Write: Anytime 0 RTI keeps running in Wait Mode. 1 RTI stops and initializes the RTI dividers whenever the part goes into Wait Mode.
0 COPWAI	**COP Stops in Wait Mode Bit** Normal modes: Write once Special modes: Write anytime 0 COP keeps running in Wait Mode. 1 COP stops and initializes the COP counter whenever the part goes into Wait Mode.

8.3.2.7 S12XECRG IPLL Control Register (PLLCTL)

This register controls the IPLL functionality.

Module Base + 0x0006

	7	6	5	4	3	2	1	0
R W	CME	PLLON	FM1	FM0	FSTWKP	PRE	PCE	SCME
Reset	1	1	0	0	0	0	0	1

Figure 8-9. S12XECRG IPLL Control Register (PLLCTL)

Read: Anytime

Write: Refer to each bit for individual write conditions

Table 8-7. PLLCTL Field Descriptions

Field	Description
7 CME	**Clock Monitor Enable Bit** — CME enables the clock monitor. Write anytime except when SCM = 1. 0 Clock monitor is disabled. 1 Clock monitor is enabled. Slow or stopped clocks will cause a clock monitor reset sequence or Self Clock Mode. **Note:** Operating with CME=0 will not detect any loss of clock. In case of poor clock quality this could cause unpredictable operation of the MCU! In Stop Mode (PSTP=0) the clock monitor is disabled independently of the CME bit setting and any loss of external clock will not be detected. Also after wake-up from stop mode (PSTP = 0) with fast wake-up enabled (FSTWKP = 1) the clock monitor is disabled independently of the CME bit setting and any loss of external clock will not be detected.
6 PLLON	**Phase Lock Loop On Bit** — PLLON turns on the IPLL circuitry. In Self Clock Mode, the IPLL is turned on, but the PLLON bit reads the last written value. Write anytime except when PLLSEL = 1. 0 IPLL is turned off. 1 IPLL is turned on.
5, 4 FM1, FM0	IPLL **Frequency Modulation Enable Bit** — FM1 and FM0 enable additional frequency modulation on the VCOCLK. This is to reduce noise emission. The modulation frequency is f_{ref} divided by 16. Write anytime except when PLLSEL = 1. See Table 8-8 for coding.
3 FSTWKP	**Fast Wake-up from Full Stop Bit** — FSTWKP enables fast wake-up from full stop mode. Write anytime. If Self-Clock Mode is disabled (SCME = 0) this bit has no effect. 0 Fast wake-up from full stop mode is disabled. 1 Fast wake-up from full stop mode is enabled. When waking up from full stop mode the system will immediately resume operation in Self-Clock Mode (see Section 8.4.1.4, “Clock Quality Checker”). The SCMIF flag will not be set. The system will remain in Self-Clock Mode with oscillator and clock monitor disabled until FSTWKP bit is cleared. The clearing of FSTWKP will start the oscillator, the clock monitor and the clock quality check. If the clock quality check is successful, the S12XECRG will switch all system clocks to OSCCLK. The SCMIF flag will be set. See application examples in Figure 8-19 and Figure 8-20.
2 PRE	**RTI Enable During Pseudo Stop Bit** — PRE enables the RTI during Pseudo Stop Mode. Write anytime. 0 RTI stops running during Pseudo Stop Mode. 1 RTI continues running during Pseudo Stop Mode. **Note:** If the PRE bit is cleared the RTI dividers will go static while Pseudo Stop Mode is active. The RTI dividers will <u>not</u> initialize like in Wait Mode with RTIWAI bit set.
1 PCE	**COP Enable During Pseudo Stop Bit** — PCE enables the COP during Pseudo Stop Mode. Write anytime. 0 COP stops running during Pseudo Stop Mode 1 COP continues running during Pseudo Stop Mode **Note:** If the PCE bit is cleared the COP dividers will go static while Pseudo Stop Mode is active. The COP dividers will <u>not</u> initialize like in Wait Mode with COPWAI bit set.
0 SCME	**Self Clock Mode Enable Bit** Normal modes: Write once Special modes: Write anytime SCME can not be cleared while operating in Self Clock Mode (SCM = 1). 0 Detection of crystal clock failure causes clock monitor reset (see Section 8.5.1.1, “Clock Monitor Reset”). 1 Detection of crystal clock failure forces the MCU in Self Clock Mode (see Section 8.4.2.2, “Self Clock Mode”).

Table 8-8. FM Amplitude selection

FM1	FM0	FM Amplitude / f_{VCO} Variation
0	0	FM off
0	1	±1%
1	0	±2%
1	1	±4%

8.3.2.8 S12XECRG RTI Control Register (RTICTL)

This register selects the timeout period for the Real Time Interrupt.

Module Base + 0x0007

	7	6	5	4	3	2	1	0
R/W	RTDEC	RTR6	RTR5	RTR4	RTR3	RTR2	RTR1	RTR0
Reset	0	0	0	0	0	0	0	0

Figure 8-10. S12XECRG RTI Control Register (RTICTL)

Read: Anytime

Write: Anytime

NOTE

A write to this register initializes the RTI counter.

Table 8-9. RTICTL Field Descriptions

Field	Description
7 RTDEC	**Decimal or Binary Divider Select Bit** — RTDEC selects decimal or binary based prescaler values. 0 Binary based divider value. See Table 8-10 1 Decimal based divider value. See Table 8-11
6–4 RTR[6:4]	**Real Time Interrupt Prescale Rate Select Bits** — These bits select the prescale rate for the RTI. See Table 8-10 and Table 8-11.
3–0 RTR[3:0]	**Real Time Interrupt Modulus Counter Select Bits** — These bits select the modulus counter target value to provide additional granularity.Table 8-10 and Table 8-11 show all possible divide values selectable by the RTICTL register. The source clock for the RTI is OSCCLK.

Table 8-10. RTI Frequency Divide Rates for RTDEC = 0

RTR[3:0]	RTR[6:4] =							
	000 (OFF)	001 (2^{10})	010 (2^{11})	011 (2^{12})	100 (2^{13})	101 (2^{14})	110 (2^{15})	111 (2^{16})
0000 (÷1)	OFF(1)	2^{10}	2^{11}	2^{12}	2^{13}	2^{14}	2^{15}	2^{16}

Table 8-10. RTI Frequency Divide Rates for RTDEC = 0

RTR[3:0]	RTR[6:4] =							
	000 (OFF)	**001 (2^{10})**	**010 (2^{11})**	**011 (2^{12})**	**100 (2^{13})**	**101 (2^{14})**	**110 (2^{15})**	**111 (2^{16})**
0001 (÷2)	OFF	$2x2^{10}$	$2x2^{11}$	$2x2^{12}$	$2x2^{13}$	$2x2^{14}$	$2x2^{15}$	$2x2^{16}$
0010 (÷3)	OFF	$3x2^{10}$	$3x2^{11}$	$3x2^{12}$	$3x2^{13}$	$3x2^{14}$	$3x2^{15}$	$3x2^{16}$
0011 (÷4)	OFF	$4x2^{10}$	$4x2^{11}$	$4x2^{12}$	$4x2^{13}$	$4x2^{14}$	$4x2^{15}$	$4x2^{16}$
0100 (÷5)	OFF	$5x2^{10}$	$5x2^{11}$	$5x2^{12}$	$5x2^{13}$	$5x2^{14}$	$5x2^{15}$	$5x2^{16}$
0101 (÷6)	OFF	$6x2^{10}$	$6x2^{11}$	$6x2^{12}$	$6x2^{13}$	$6x2^{14}$	$6x2^{15}$	$6x2^{16}$
0110 (÷7)	OFF	$7x2^{10}$	$7x2^{11}$	$7x2^{12}$	$7x2^{13}$	$7x2^{14}$	$7x2^{15}$	$7x2^{16}$
0111 (÷8)	OFF	$8x2^{10}$	$8x2^{11}$	$8x2^{12}$	$8x2^{13}$	$8x2^{14}$	$8x2^{15}$	$8x2^{16}$
1000 (÷9)	OFF	$9x2^{10}$	$9x2^{11}$	$9x2^{12}$	$9x2^{13}$	$9x2^{14}$	$9x2^{15}$	$9x2^{16}$
1001 (÷10)	OFF	$10x2^{10}$	$10x2^{11}$	$10x2^{12}$	$10x2^{13}$	$10x2^{14}$	$10x2^{15}$	$10x2^{16}$
1010 (÷11)	OFF	$11x2^{10}$	$11x2^{11}$	$11x2^{12}$	$11x2^{13}$	$11x2^{14}$	$11x2^{15}$	$11x2^{16}$
1011 (÷12)	OFF	$12x2^{10}$	$12x2^{11}$	$12x2^{12}$	$12x2^{13}$	$12x2^{14}$	$12x2^{15}$	$12x2^{16}$
1100 (÷13)	OFF	$13x2^{10}$	$13x2^{11}$	$13x2^{12}$	$13x2^{13}$	$13x2^{14}$	$13x2^{15}$	$13x2^{16}$
1101 (÷14)	OFF	$14x2^{10}$	$14x2^{11}$	$14x2^{12}$	$14x2^{13}$	$14x2^{14}$	$14x2^{15}$	$14x2^{16}$
1110 (÷15)	OFF	$15x2^{10}$	$15x2^{11}$	$15x2^{12}$	$15x2^{13}$	$15x2^{14}$	$15x2^{15}$	$15x2^{16}$
1111 (÷16)	OFF	$16x2^{10}$	$16x2^{11}$	$16x2^{12}$	$16x2^{13}$	$16x2^{14}$	$16x2^{15}$	$16x2^{16}$

1. Denotes the default value out of reset.This value should be used to disable the RTI to ensure future backwards compatibility.

Table 8-11. RTI Frequency Divide Rates for RTDEC=1

RTR[3:0]	RTR[6:4] =							
	000 ($1x10^3$)	**001 ($2x10^3$)**	**010 ($5x10^3$)**	**011 ($10x10^3$)**	**100 ($20x10^3$)**	**101 ($50x10^3$)**	**110 ($100x10^3$)**	**111 ($200x10^3$)**
0000 (÷1)	$1x10^3$	$2x10^3$	$5x10^3$	$10x10^3$	$20x10^3$	$50x10^3$	$100x10^3$	$200x10^3$
0001 (÷2)	$2x10^3$	$4x10^3$	$10x10^3$	$20x10^3$	$40x10^3$	$100x10^3$	$200x10^3$	$400x10^3$
0010 (÷3)	$3x10^3$	$6x10^3$	$15x10^3$	$30x10^3$	$60x10^3$	$150x10^3$	$300x10^3$	$600x10^3$
0011 (÷4)	$4x10^3$	$8x10^3$	$20x10^3$	$40x10^3$	$80x10^3$	$200x10^3$	$400x10^3$	$800x10^3$
0100 (÷5)	$5x10^3$	$10x10^3$	$25x10^3$	$50x10^3$	$100x10^3$	$250x10^3$	$500x10^3$	$1x10^6$
0101 (÷6)	$6x10^3$	$12x10^3$	$30x10^3$	$60x10^3$	$120x10^3$	$300x10^3$	$600x10^3$	$1.2x10^6$

Table 8-11. RTI Frequency Divide Rates for RTDEC=1

RTR[3:0]	RTR[6:4] =							
	000 ($1x10^3$)	001 ($2x10^3$)	010 ($5x10^3$)	011 ($10x10^3$)	100 ($20x10^3$)	101 ($50x10^3$)	110 ($100x10^3$)	111 ($200x10^3$)
0110 (÷7)	$7x10^3$	$14x10^3$	$35x10^3$	$70x10^3$	$140x10^3$	$350x10^3$	$700x10^3$	$1.4x10^6$
0111 (÷8)	$8x10^3$	$16x10^3$	$40x10^3$	$80x10^3$	$160x10^3$	$400x10^3$	$800x10^3$	$1.6x10^6$
1000 (÷9)	$9x10^3$	$18x10^3$	$45x10^3$	$90x10^3$	$180x10^3$	$450x10^3$	$900x10^3$	$1.8x10^6$
1001 (÷10)	$10 x10^3$	$20x10^3$	$50x10^3$	$100x10^3$	$200x10^3$	$500x10^3$	$1x10^6$	$2x10^6$
1010 (÷11)	$11 x10^3$	$22x10^3$	$55x10^3$	$110x10^3$	$220x10^3$	$550x10^3$	$1.1x10^6$	$2.2x10^6$
1011 (÷12)	$12x10^3$	$24x10^3$	$60x10^3$	$120x10^3$	$240x10^3$	$600x10^3$	$1.2x10^6$	$2.4x10^6$
1100 (÷13)	$13x10^3$	$26x10^3$	$65x10^3$	$130x10^3$	$260x10^3$	$650x10^3$	$1.3x10^6$	$2.6x10^6$
1101 (÷14)	$14x10^3$	$28x10^3$	$70x10^3$	$140x10^3$	$280x10^3$	$700x10^3$	$1.4x10^6$	$2.8x10^6$
1110 (÷15)	$15x10^3$	$30x10^3$	$75x10^3$	$150x10^3$	$300x10^3$	$750x10^3$	$1.5x10^6$	$3x10^6$
1111 (÷16)	$16x10^3$	$32x10^3$	$80x10^3$	$160x10^3$	$320x10^3$	$800x10^3$	$1.6x10^6$	$3.2x10^6$

8.3.2.9 S12XECRG COP Control Register (COPCTL)

This register controls the COP (Computer Operating Properly) watchdog.

Module Base + 0x0008

	7	6	5	4	3	2	1	0
R	WCOP	RSBCK	0	0	0	CR2	CR1	CR0
W			WRTMASK					
Reset[1]	0	0	0	0	0	0	0	0

1. Refer to Device User Guide (Section: S12XECRG) for reset values of WCOP, CR2, CR1 and CR0.

= Unimplemented or Reserved

Figure 8-11. S12XECRG COP Control Register (COPCTL)

Read: Anytime

Write:

1. RSBCK: anytime in special modes; write to “1” but not to “0” in all other modes
2. WCOP, CR2, CR1, CR0:
   - Anytime in special modes
   - Write once in all other modes
     - Writing CR[2:0] to “000” has no effect, but counts for the “write once” condition.
     - Writing WCOP to “0” has no effect, but counts for the “write once” condition.

The COP time-out period is restarted if one these two conditions is true:

1. Writing a non zero value to CR[2:0] (anytime in special modes, once in all other modes) with WRTMASK = 0.

   or

2. Changing RSBCK bit from “0” to “1”.

Table 8-12. COPCTL Field Descriptions

Field	Description
7 WCOP	**Window COP Mode Bit** — When set, a write to the ARMCOP register must occur in the last 25% of the selected period. A write during the first 75% of the selected period will reset the part. As long as all writes occur during this window, $55 can be written as often as desired. Once $AA is written after the $55, the time-out logic restarts and the user must wait until the next window before writing to ARMCOP. Table 8-13 shows the duration of this window for the seven available COP rates. 0 Normal COP operation 1 Window COP operation
6 RSBCK	**COP and RTI Stop in Active BDM Mode Bit** 0 Allows the COP and RTI to keep running in Active BDM mode. 1 Stops the COP and RTI counters whenever the part is in Active BDM mode.
5 WRTMASK	**Write Mask for WCOP and CR[2:0] Bit** — This write-only bit serves as a mask for the WCOP and CR[2:0] bits while writing the COPCTL register. It is intended for BDM writing the RSBCK without touching the contents of WCOP and CR[2:0]. 0 Write of WCOP and CR[2:0] has an effect with this write of COPCTL 1 Write of WCOP and CR[2:0] has no effect with this write of COPCTL. (Does not count for “write once”.)
2–0 CR[2:0]	**COP Watchdog Timer Rate Select** — These bits select the COP time-out rate (see Table 8-13). Writing a nonzero value to CR[2:0] enables the COP counter and starts the time-out period. A COP counter time-out causes a system reset. This can be avoided by periodically (before time-out) reinitialize the COP counter via the ARMCOP register. While all of the following four conditions are true the CR[2:0], WCOP bits are ignored and the COP operates at highest time-out period (2^{24} cycles) in normal COP mode (Window COP mode disabled): 1) COP is enabled (CR[2:0] is not 000) 2) BDM mode active 3) RSBCK = 0 4) Operation in emulation or special modes

Table 8-13. COP Watchdog Rates[(1)]

CR2	CR1	CR0	OSCCLK Cycles to Timeout
0	0	0	COP disabled
0	0	1	2^{14}
0	1	0	2^{16}
0	1	1	2^{18}
1	0	0	2^{20}
1	0	1	2^{22}
1	1	0	2^{23}

Table 8-13. COP Watchdog Rates[1]

CR2	CR1	CR0	OSCCLK Cycles to Timeout
1	1	1	2^{24}

1. OSCCLK cycles are referenced from the previous COP time-out reset (writing $55/$AA to the ARMCOP register)

8.3.2.10 Reserved Register (FORBYP)

NOTE

This reserved register is designed for factory test purposes only, and is not intended for general user access. Writing to this register when in special modes can alter the S12XECRG's functionality.

Module Base + 0x0009

	7	6	5	4	3	2	1	0
R	0	0	0	0	0	0	0	0
W								
Reset	0	0	0	0	0	0	0	0

= Unimplemented or Reserved

Figure 8-12. Reserved Register (FORBYP)

Read: Always read $00 except in special modes

Write: Only in special modes

8.3.2.11 Reserved Register (CTCTL)

NOTE

This reserved register is designed for factory test purposes only, and is not intended for general user access. Writing to this register when in special test modes can alter the S12XECRG's functionality.

Module Base + 0x000A

	7	6	5	4	3	2	1	0
R	0	0	0	0	0	0	0	0
W								
Reset	0	0	0	0	0	0	0	0

= Unimplemented or Reserved

Figure 8-13. Reserved Register (CTCTL)

Read: Always read $00 except in special modes

Write: Only in special modes

8.3.2.12 S12XECRG COP Timer Arm/Reset Register (ARMCOP)

This register is used to restart the COP time-out period.

Module Base + 0x000B

	7	6	5	4	3	2	1	0
R	0	0	0	0	0	0	0	0
W	Bit 7	Bit 6	Bit 5	Bit 4	Bit 3	Bit 2	Bit 1	Bit 0
Reset	0	0	0	0	0	0	0	0

Figure 8-14. S12XECRG ARMCOP Register Diagram

Read: Always reads $00

Write: Anytime

When the COP is disabled (CR[2:0] = “000”) writing to this register has no effect.

When the COP is enabled by setting CR[2:0] nonzero, the following applies:

> Writing any value other than $55 or $AA causes a COP reset. To restart the COP time-out period you must write $55 followed by a write of $AA. Other instructions may be executed between these writes but the sequence ($55, $AA) must be completed prior to COP end of time-out period to avoid a COP reset. Sequences of $55 writes or sequences of $AA writes are allowed. When the WCOP bit is set, $55 and $AA writes must be done in the last 25% of the selected time-out period; writing any value in the first 75% of the selected period will cause a COP reset.

8.4 Functional Description

8.4.1 Functional Blocks

8.4.1.1 Phase Locked Loop with Internal Filter (IPLL)

The IPLL is used to run the MCU from a different time base than the incoming OSCCLK. Figure 8-15 shows a block diagram of the IPLL.

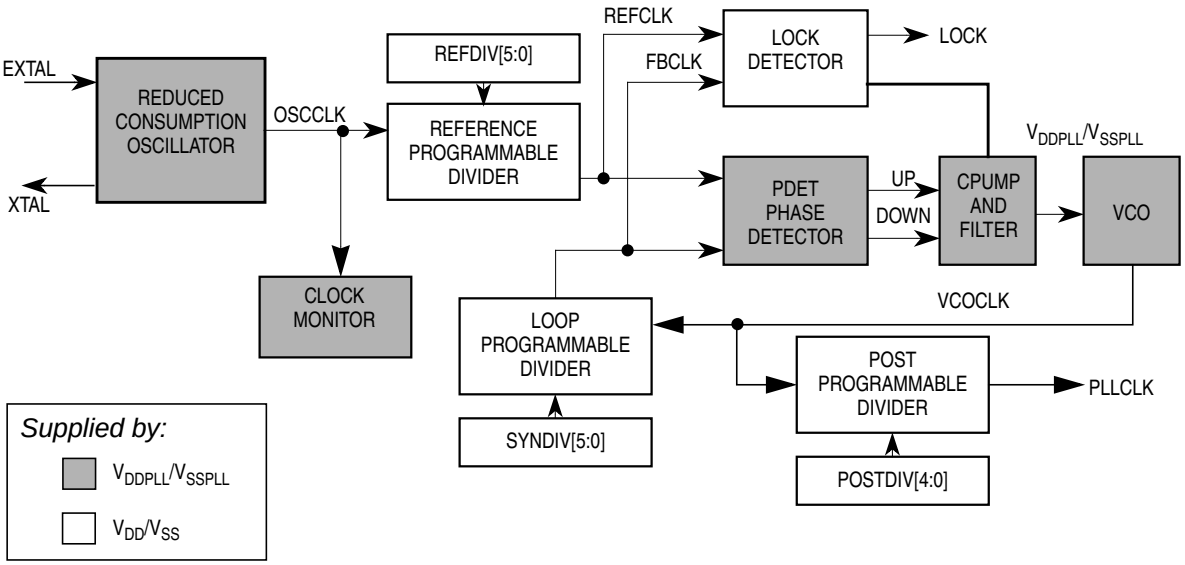

Figure 8-15. IPLL Functional Diagram

For increased flexibility, OSCCLK can be divided in a range of 1 to 64 to generate the reference frequency REFCLK using the REFDIV[5:0] bits. This offers a finer multiplication granularity. Based on the SYNDIV[5:0] bits the IPLL generates the VCOCLK by multiplying the reference clock by a multiple of 2, 4, 6,... 126, 128. Based on the POSTDIV[4:0] bits the VCOCLK can be divided in a range of 1,2,4,6,8,... to 62 to generate the PLLCLK.

$$f_{PLL} = 2 \times f_{OSC} \times \frac{SYNDIV + 1}{[REFDIV + 1][2 \times POSTDIV]}$$

NOTE

Although it is possible to set the dividers to command a very high clock frequency, do not exceed the specified bus frequency limit for the MCU.

If (PLLSEL = 1) then $f_{BUS} = f_{PLL} / 2$.

IF POSTDIV = $00 the f_{PLL} is identical to f_{VCO} (divide by one)

Several examples of IPLL divider settings are shown in Table 8-14. Shaded rows indicated that these settings are not recommended. The following rules help to achieve optimum stability and shortest lock time:

- Use lowest possible f_{VCO} / f_{REF} ratio (SYNDIV value).
- Use highest possible REFCLK frequency f_{REF}.

Table 8-14. Examples of IPLL Divider Settings[1]

f_{OSC}	REFDIV[5:0]	f_{REF}	REFFRQ[1:0]	SYNDIV[5:0]	f_{VCO}	VCOFRQ[1:0]	POSTDIV[4:0]	f_{PLL}	f_{BUS}
4MHz	$01	2MHz	01	$18	100MHz	11	$00	100MHz	50 MHz
8MHz	$03	2MHz	01	$18	100MHz	11	$00	100MHz	50 MHz
4MHz	$00	4MHz	01	$09	80MHz	01	$00	80MHz	40MHz
8MHz	$00	8MHz	10	$04	80MHz	01	$00	80MHz	40MHz
4MHz	$00	4MHz	01	$03	32MHz	00	$01	16MHz	8MHz
4MHz	$01	2MHz	01	$18	100MHz	11	$01	50MHz	25MHz

1. f_{PLL} and f_{BUS} values in this table may exceed maximum allowed frequencies for some devices. Refer to device information for maximum values.

8.4.1.1.1 IPLL Operation

The oscillator output clock signal (OSCCLK) is fed through the reference programmable divider and is divided in a range of 1 to 64 (REFDIV+1) to output the REFCLK. The VCO output clock, (VCOCLK) is fed back through the programmable loop divider and is divided in a range of 2 to 128 in increments of [2 x (SYNDIV +1)] to output the FBCLK. The VCOCLK is fed to the final programmable divider and is divided in a range of 1,2,4,6,8,... to 62 (2*POSTDIV) to output the PLLCLK. See Figure 8-15.

The phase detector then compares the FBCLK, with the REFCLK. Correction pulses are generated based on the phase difference between the two signals. The loop filter then slightly alters the DC voltage on the internal filter capacitor, based on the width and direction of the correction pulse.

The user must select the range of the REFCLK frequency and the range of the VCOCLK frequency to ensure that the correct IPLL loop bandwidth is set.

The lock detector compares the frequencies of the FBCLK, and the REFCLK. Therefore, the speed of the lock detector is directly proportional to the reference clock frequency. The circuit determines the lock condition based on this comparison.

If IPLL LOCK interrupt requests are enabled, the software can wait for an interrupt request and then check the LOCK bit. If interrupt requests are disabled, software can poll the LOCK bit continuously (during IPLL start-up, usually) or at periodic intervals. In either case, only when the LOCK bit is set, the PLLCLK can be selected as the source for the system and core clocks. If the IPLL is selected as the source for the system and core clocks and the LOCK bit is clear, the IPLL has suffered a severe noise hit and the software must take appropriate action, depending on the application.

- The LOCK bit is a read-only indicator of the locked state of the IPLL.
- The LOCK bit is set when the VCO frequency is within a certain tolerance, Δ_{Lock}, and is cleared when the VCO frequency is out of a certain tolerance, Δ_{unl}.
- Interrupt requests can occur if enabled (LOCKIE = 1) when the lock condition changes, toggling the LOCK bit.

8.4.1.2 System Clocks Generator

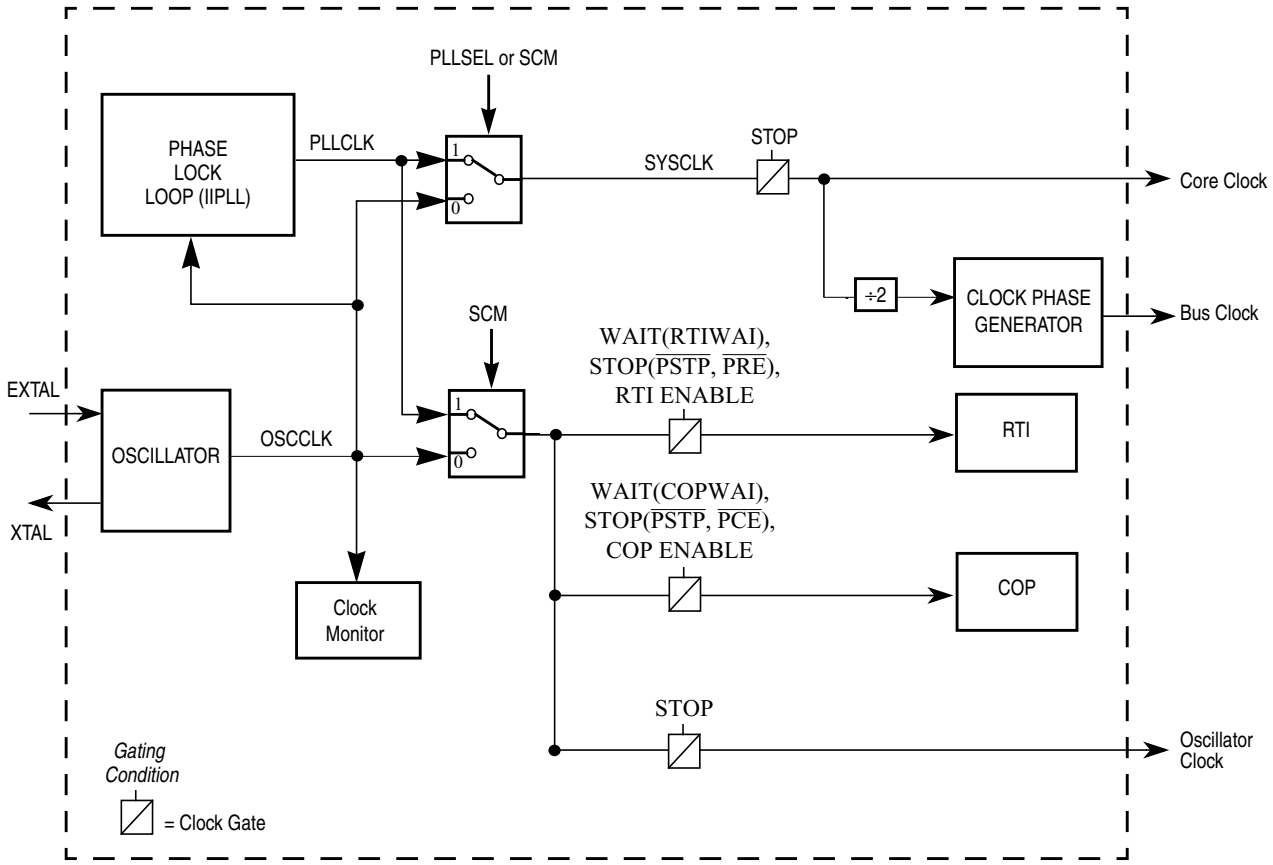

Figure 8-16. System Clocks Generator

The clock generator creates the clocks used in the MCU (see Figure 8-16). The gating condition placed on top of the individual clock gates indicates the dependencies of different modes (STOP, WAIT) and the setting of the respective configuration bits.

The peripheral modules use the Bus Clock. Some peripheral modules also use the Oscillator Clock. If the MCU enters Self Clock Mode (see Section 8.4.2.2, “Self Clock Mode”) Oscillator clock source is switched to PLLCLK running at its minimum frequency f_{SCM}. The Bus Clock is used to generate the clock visible at the ECLK pin. The Core Clock signal is the clock for the CPU. The Core Clock is twice the Bus Clock. But note that a CPU cycle corresponds to one Bus Clock.

IPLL clock mode is selected with PLLSEL bit in the CLKSEL register. When selected, the IPLL output clock drives SYSCLK for the main system including the CPU and peripherals. The IPLL cannot be turned off by clearing the PLLON bit, if the IPLL clock is selected. When PLLSEL is changed, it takes a maximum of 4 OSCCLK plus 4 PLLCLK cycles to make the transition. During the transition, all clocks freeze and CPU activity ceases.

8.4.1.3 Clock Monitor (CM)

If no OSCCLK edges are detected within a certain time, the clock monitor within the oscillator block generates a clock monitor fail event. The S12XECRG then asserts self clock mode or generates a system reset depending on the state of SCME bit. If the clock monitor is disabled or the presence of clocks is detected no failure is indicated by the oscillator block.The clock monitor function is enabled/disabled by the CME control bit.

8.4.1.4 Clock Quality Checker

The clock monitor performs a coarse check on the incoming clock signal. The clock quality checker provides a more accurate check in addition to the clock monitor.

A clock quality check is triggered by any of the following events:

- Power on reset (*POR*)
- Low voltage reset (*LVR*)
- Wake-up from Full Stop Mode (*exit full stop*)
- Clock Monitor fail indication (*CM fail*)

A time window of 50000 PLLCLK cycles[1] is called *check window*.

A number greater equal than 4096 rising OSCCLK edges within a *check window* is called *osc ok*. Note that *osc ok* immediately terminates the current *check window*. See Figure 8-17 as an example.

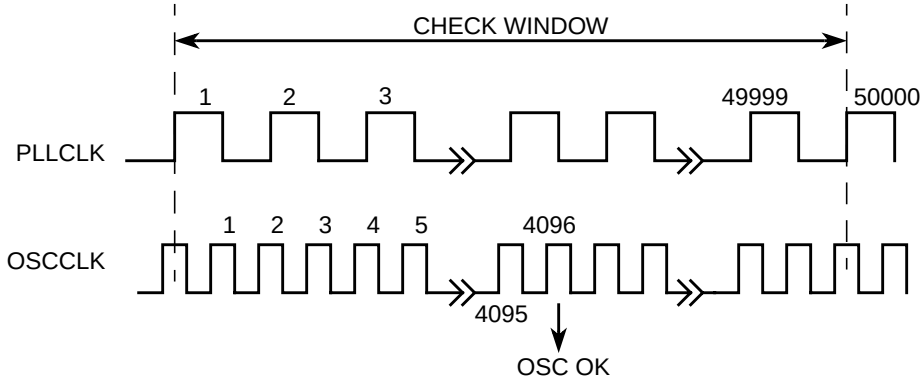

Figure 8-17. Check Window Example

1. IPLL is running at self clock mode frequency f_{SCM}.

The Sequence for clock quality check is shown in Figure 8-18.

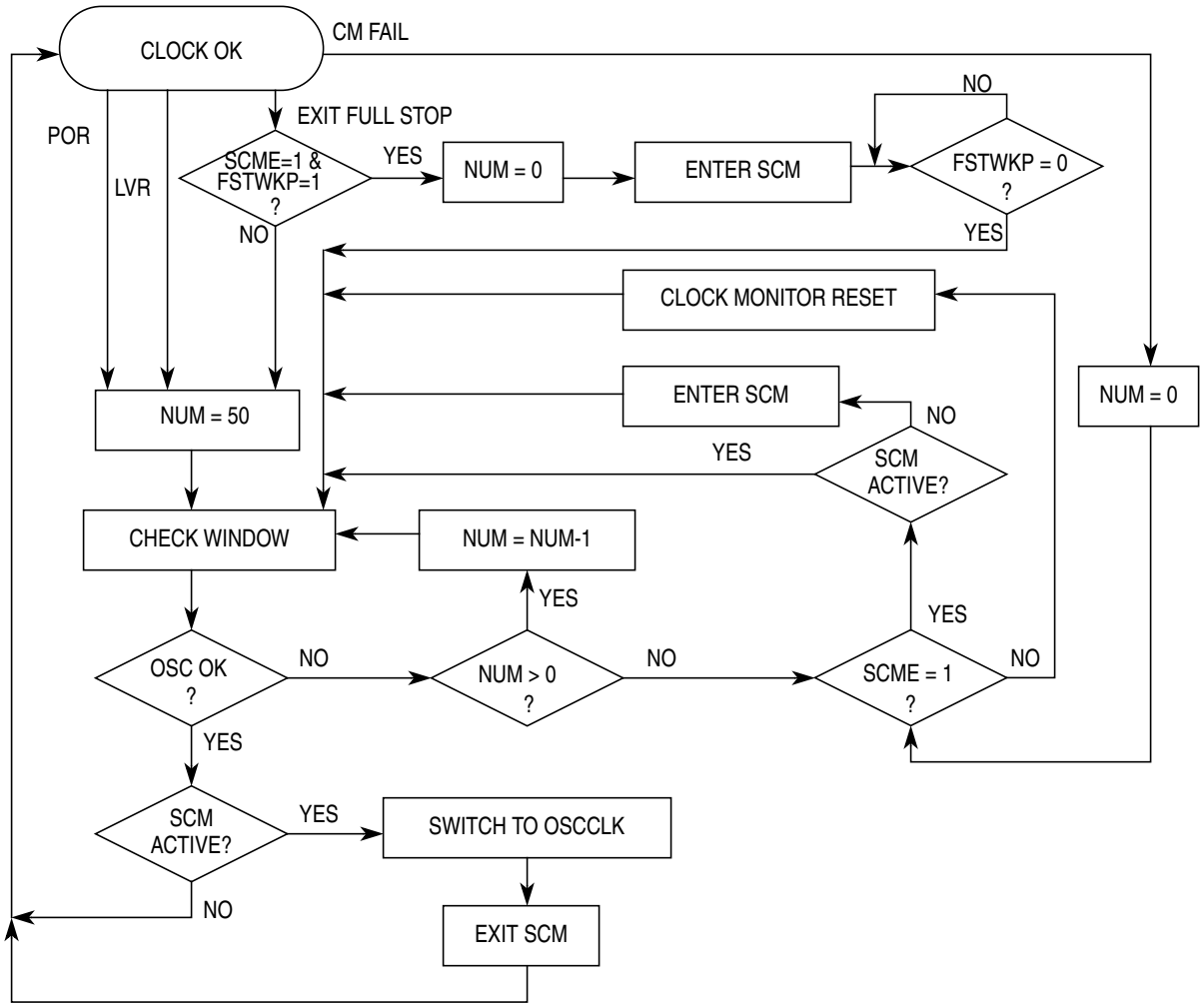

Figure 8-18. Sequence for Clock Quality Check

NOTE

Remember that in parallel to additional actions caused by Self Clock Mode or Clock Monitor Reset[1] handling the clock quality checker **continues** to check the OSCCLK signal.

NOTE

The Clock Quality Checker enables the IPLL and the voltage regulator (VREG) anytime a clock check has to be performed. An ongoing clock quality check could also cause a running IPLL (f_{SCM}) and an active VREG during Pseudo Stop Mode.

1. A Clock Monitor Reset will always set the SCME bit to logical'1'.

8.4.1.5 Computer Operating Properly Watchdog (COP)

The COP (free running watchdog timer) enables the user to check that a program is running and sequencing properly. When the COP is being used, software is responsible for keeping the COP from timing out. If the COP times out it is an indication that the software is no longer being executed in the intended sequence; thus a system reset is initiated (see Section 8.4.1.5, "Computer Operating Properly Watchdog (COP)"). The COP runs with a gated OSCCLK. Three control bits in the COPCTL register allow selection of seven COP time-out periods.

When COP is enabled, the program must write $55 and $AA (in this order) to the ARMCOP register during the selected time-out period. Once this is done, the COP time-out period is restarted. If the program fails to do this and the COP times out, the part will reset. Also, if any value other than $55 or $AA is written, the part is immediately reset.

Windowed COP operation is enabled by setting WCOP in the COPCTL register. In this mode, writes to the ARMCOP register to clear the COP timer must occur in the last 25% of the selected time-out period. A premature write will immediately reset the part.

If PCE bit is set, the COP will continue to run in Pseudo Stop Mode.

8.4.1.6 Real Time Interrupt (RTI)

The RTI can be used to generate a hardware interrupt at a fixed periodic rate. If enabled (by setting RTIE=1), this interrupt will occur at the rate selected by the RTICTL register. The RTI runs with a gated OSCCLK. At the end of the RTI time-out period the RTIF flag is set to one and a new RTI time-out period starts immediately.

A write to the RTICTL register restarts the RTI time-out period.

If the PRE bit is set, the RTI will continue to run in Pseudo Stop Mode.

8.4.2 Operation Modes

8.4.2.1 Normal Mode

The S12XECRG block behaves as described within this specification in all normal modes.

8.4.2.2 Self Clock Mode

If the external clock frequency is not available due to a failure or due to long crystal start-up time, the Bus Clock and the Core Clock are derived from the PLLCLK running at self clock mode frequency f_{SCM}; this mode of operation is called Self Clock Mode. This requires CME = 1 and SCME = 1, which is the default after reset. If the MCU was clocked by the PLLCLK prior to entering Self Clock Mode, the PLLSEL bit will be cleared. If the external clock signal has stabilized again, the S12XECRG will automatically select OSCCLK to be the system clock and return to normal mode. See Section 8.4.1.4, "Clock Quality Checker" for more information on entering and leaving Self Clock Mode.

NOTE

In order to detect a potential clock loss the CME bit should always be enabled (CME = 1).

If CME bit is disabled and the MCU is configured to run on PLLCLK, a loss of external clock (OSCCLK) will not be detected and will cause the system clock to drift towards lower frequencies. As soon as the external clock is available again the system clock ramps up to its IPLL target frequency. If the MCU is running on external clock any loss of clock will cause the system to go static.

8.4.3 Low Power Options

This section summarizes the low power options available in the S12XECRG.

8.4.3.1 Run Mode

This is the default mode after reset.

The RTI can be stopped by setting the associated rate select bits to zero.

The COP can be stopped by setting the associated rate select bits to zero.

8.4.3.2 Wait Mode

The WAI instruction puts the MCU in a low power consumption stand-by mode depending on setting of the individual bits in the CLKSEL register. All individual Wait Mode configuration bits can be superposed. This provides enhanced granularity in reducing the level of power consumption during Wait Mode. Table 8-15 lists the individual configuration bits and the parts of the MCU that are affected in Wait Mode.

Table 8-15. MCU Configuration During Wait Mode

	PLLWAI	RTIWAI	COPWAI
IPLL	Stopped	—	—
RTI	—	Stopped	—
COP	—	—	Stopped

After executing the WAI instruction the core requests the S12XECRG to switch MCU into Wait Mode. The S12XECRG then checks whether the PLLWAI bit is asserted. Depending on the configuration the S12XECRG switches the system and core clocks to OSCCLK by clearing the PLLSEL bit and disables the IPLL.

There are two ways to restart the MCU from Wait Mode:

1. Any reset
2. Any interrupt

8.4.3.3 Stop Mode

All clocks are stopped in STOP mode, dependent of the setting of the PCE, PRE and PSTP bit. The oscillator is disabled in STOP mode unless the PSTP bit is set. If the PRE or PCE bits are set, the RTI or COP continues to run in Pseudo Stop Mode. In addition to disabling system and core clocks the S12XECRG requests other functional units of the MCU (e.g. voltage-regulator) to enter their individual power saving modes (if available).

If the PLLSEL bit is still set when entering Stop Mode, the S12XECRG will switch the system and core clocks to OSCCLK by clearing the PLLSEL bit. Then the S12XECRG disables the IPLL, disables the core clock and finally disables the remaining system clocks.

If Pseudo Stop Mode is entered from Self-Clock Mode the S12XECRG will continue to check the clock quality until clock check is successful. In this case the IPLL and the voltage regulator (VREG) will remain enabled. If Full Stop Mode (PSTP = 0) is entered from Self-Clock Mode the ongoing clock quality check will be stopped. A complete timeout window check will be started when Stop Mode is left again.

There are two ways to restart the MCU from Stop Mode:

1. Any reset
2. Any interrupt

If the MCU is woken-up from Full Stop Mode by an interrupt and the fast wake-up feature is enabled (FSTWKP=1 and SCME=1), the system will immediately (no clock quality check) resume operation in Self-Clock Mode (see Section 8.4.1.4, “Clock Quality Checker”). The SCMIF flag will not be set for this special case. The system will remain in Self-Clock Mode with oscillator disabled until FSTWKP bit is cleared. The clearing of FSTWKP will start the oscillator and the clock quality check. If the clock quality check is successful, the S12XECRG will switch all system clocks to oscillator clock. The SCMIF flag will be set. See application examples in Figure 8-19 and Figure 8-20.

Because the IPLL has been powered-down during Stop Mode the PLLSEL bit is cleared and the MCU runs on OSCCLK after leaving Stop-Mode. The software must manually set the PLLSEL bit again, in order to switch system and core clocks to the PLLCLK.

NOTE

In Full Stop Mode or Self-Clock Mode caused by the fast wake-up feature the clock monitor and the oscillator are disabled.

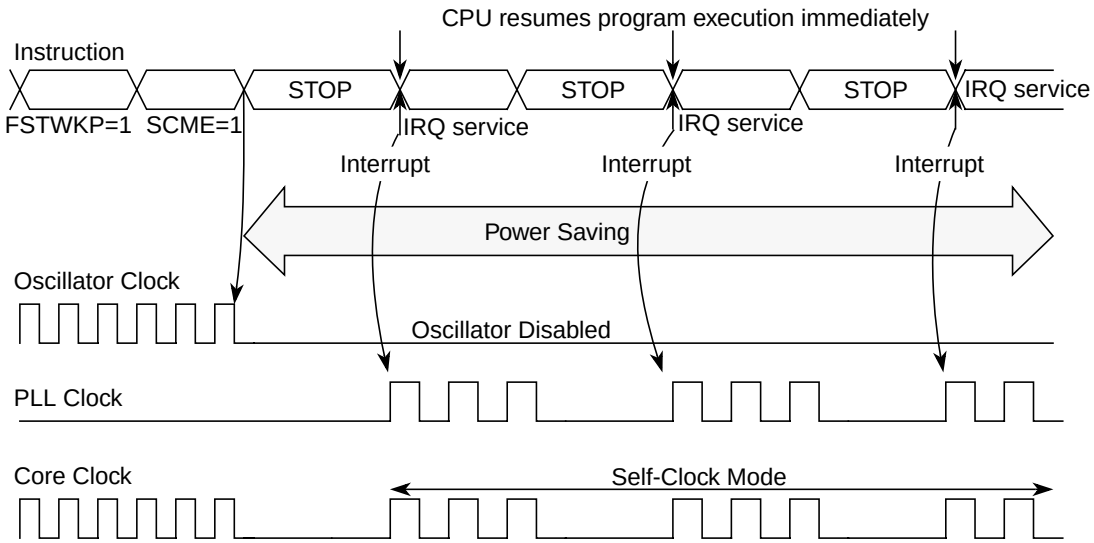

Figure 8-19. Fast Wake-up from Full Stop Mode: Example 1

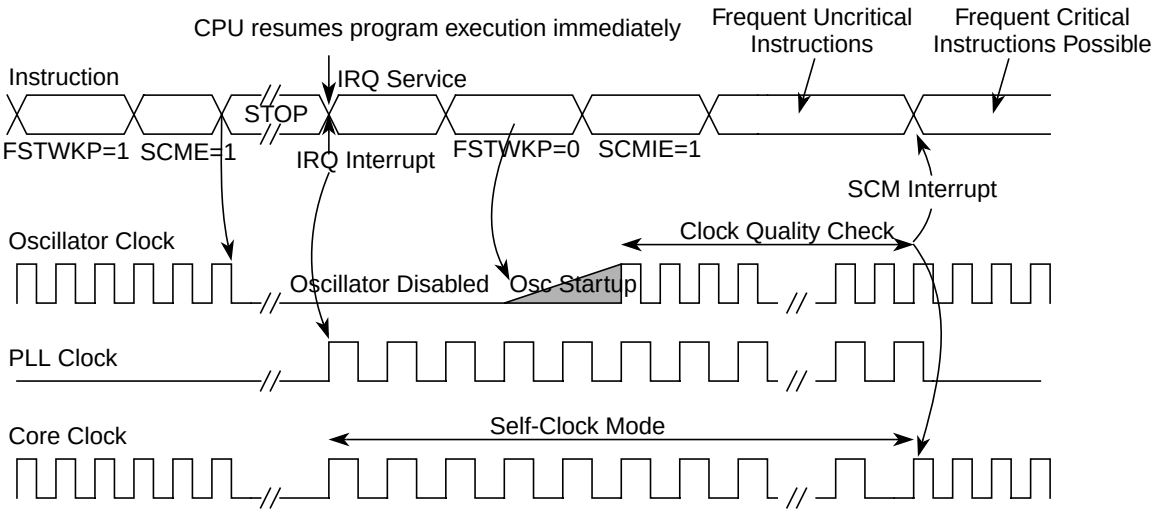

Figure 8-20. Fast Wake-up from Full Stop Mode: Example 2

8.5 Resets

All reset sources are listed in Table 8-16. Refer to MCU specification for related vector addresses and priorities.

Table 8-16. Reset Summary

Reset Source	Local Enable
Power on Reset	None
Low Voltage Reset	None
External Reset	None
Illegal Address Reset	None
Clock Monitor Reset	PLLCTL (CME=1, SCME=0)

Table 8-16. Reset Summary

Reset Source	Local Enable
COP Watchdog Reset	COPCTL (CR[2:0] nonzero)

8.5.1 Description of Reset Operation

The reset sequence is initiated by any of the following events:

- Low level is detected at the $\overline{\text{RESET}}$ pin (External Reset).
- Power on is detected.
- Low voltage is detected.
- Illegal Address Reset is detected (refer to device MMC information for details).
- COP watchdog times out.
- Clock monitor failure is detected and Self-Clock Mode was disabled (SCME=0).

Upon detection of any reset event, an internal circuit drives the $\overline{\text{RESET}}$ pin low for 128 SYSCLK cycles (see Figure 8-21). Since entry into reset is asynchronous it does not require a running SYSCLK. However, the internal reset circuit of the S12XECRG cannot sequence out of current reset condition without a running SYSCLK. The number of 128 SYSCLK cycles might be increased by n = 3 to 6 additional SYSCLK cycles depending on the internal synchronization latency. After 128+n SYSCLK cycles the $\overline{\text{RESET}}$ pin is released. The reset generator of the S12XECRG waits for additional 64 SYSCLK cycles and then samples the RESET pin to determine the originating source. Table 8-17 shows which vector will be fetched.

Table 8-17. Reset Vector Selection

Sampled $\overline{\text{RESET}}$ Pin (64 cycles after release)	Clock Monitor Reset Pending	COP Reset Pending	Vector Fetch
1	0	0	POR / LVR / Illegal Address Reset/ External Reset
1	1	X	Clock Monitor Reset
1	0	1	COP Reset
0	X	X	POR / LVR / Illegal Address Reset/ External Reset with rise of $\overline{\text{RESET}}$ pin

NOTE

External circuitry connected to the RESET pin should be able to raise the signal to a valid logic one within 64 SYSCLK cycles after the low drive is released by the MCU. If this requirement is not adhered to the reset source will always be recognized as “External Reset” even if the reset was initially caused by an other reset source.

The internal reset of the MCU remains asserted while the reset generator completes the 192 SYSCLK long reset sequence. In case the $\overline{\text{RESET}}$ pin is externally driven low for more than these 192 SYSCLK cycles (External Reset), the internal reset remains asserted longer.

Figure 8-21. RESET Timing

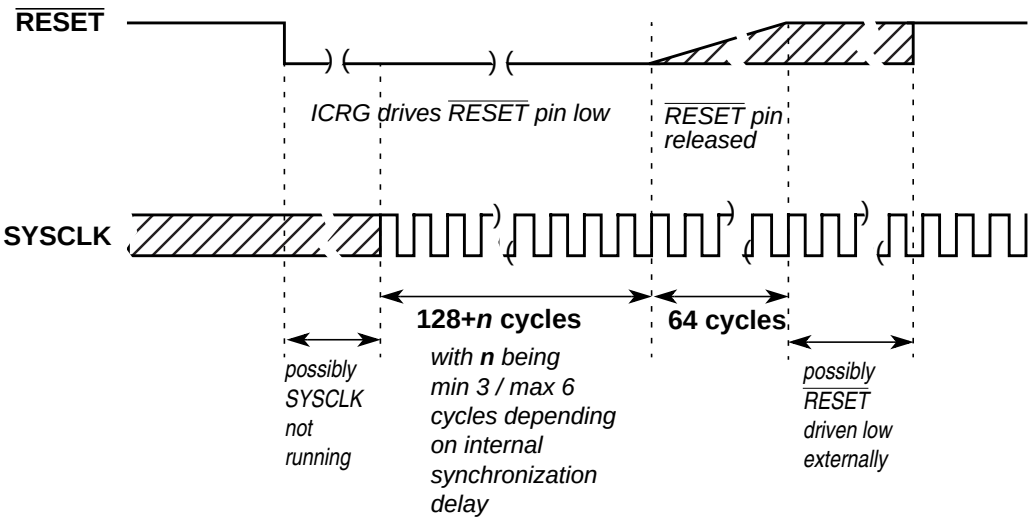

8.5.1.1 Clock Monitor Reset

The S12XECRG generates a Clock Monitor Reset in case all of the following conditions are true:

- Clock monitor is enabled (CME = 1)
- Loss of clock is detected
- Self-Clock Mode is disabled (SCME = 0).

The reset event asynchronously forces the configuration registers to their default settings. In detail the CME and the SCME are reset to logical ‘1’ (which changes the state of the SCME bit. As a consequence the S12XECRG immediately enters Self Clock Mode and starts its internal reset sequence. In parallel the clock quality check starts. As soon as clock quality check indicates a valid Oscillator Clock the S12XECRG switches to OSCCLK and leaves Self Clock Mode. Since the clock quality checker is running in parallel to the reset generator, the S12XECRG may leave Self Clock Mode while still completing the internal reset sequence.

8.5.1.2 Computer Operating Properly Watchdog (COP) Reset

When COP is enabled, the S12XECRG expects sequential write of $55 and $AA (in this order) to the ARMCOP register during the selected time-out period. Once this is done, the COP time-out period restarts. If the program fails to do this the S12XECRG will generate a reset.

8.5.1.3 Power On Reset, Low Voltage Reset

The on-chip voltage regulator detects when V_{DD} to the MCU has reached a certain level and asserts power on reset or low voltage reset or both. As soon as a power on reset or low voltage reset is triggered the

S12XECRG performs a quality check on the incoming clock signal. As soon as clock quality check indicates a valid Oscillator Clock signal the reset sequence starts using the Oscillator clock. If after 50 check windows the clock quality check indicated a non-valid Oscillator Clock the reset sequence starts using Self-Clock Mode.

Figure 8-22 and Figure 8-23 show the power-up sequence for cases when the $\overline{\text{RESET}}$ pin is tied to V_{DD} and when the $\overline{\text{RESET}}$ pin is held low.

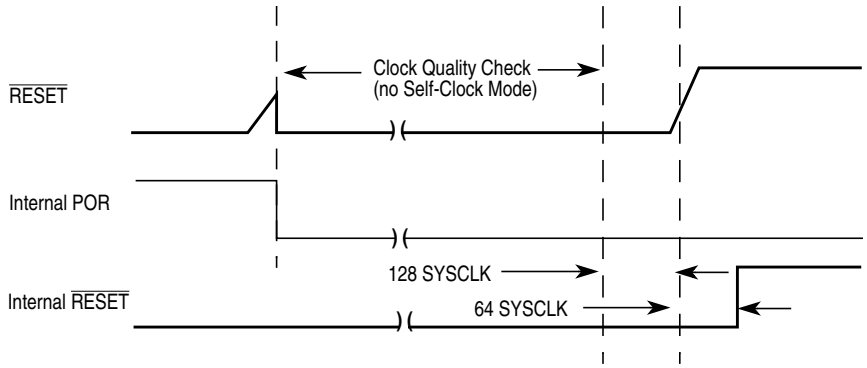

Figure 8-22. $\overline{\text{RESET}}$ Pin Tied to V_{DD} (by a Pull-up Resistor)

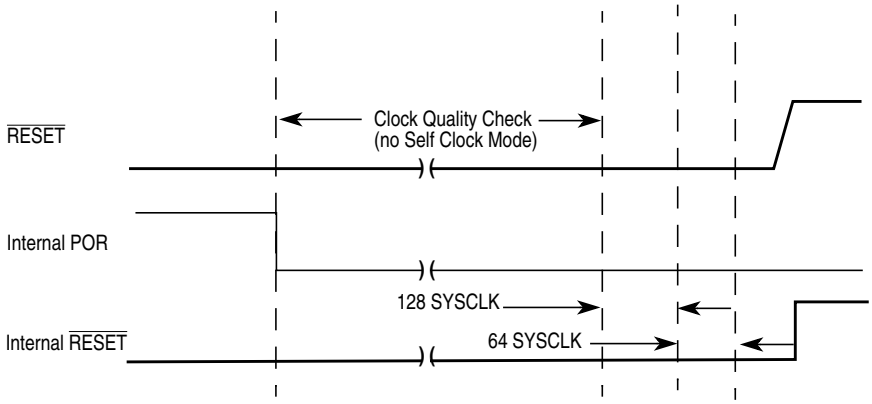

Figure 8-23. $\overline{\text{RESET}}$ Pin Held Low Externally

8.6 Interrupts

The interrupts/reset vectors requested by the S12XECRG are listed in Table 8-18. Refer to MCU specification for related vector addresses and priorities.

Table 8-18. S12XECRG Interrupt Vectors

Interrupt Source	CCR Mask	Local Enable
Real time interrupt	I bit	CRGINT (RTIE)
LOCK interrupt	I bit	CRGINT (LOCKIE)
SCM interrupt	I bit	CRGINT (SCMIE)

8.6.1 Description of Interrupt Operation

8.6.1.1 Real Time Interrupt

The S12XECRG generates a real time interrupt when the selected interrupt time period elapses. RTI interrupts are locally disabled by setting the RTIE bit to zero. The real time interrupt flag (RTIF) is set to1 when a timeout occurs, and is cleared to 0 by writing a 1 to the RTIF bit.

The RTI continues to run during Pseudo Stop Mode if the PRE bit is set to 1. This feature can be used for periodic wakeup from Pseudo Stop if the RTI interrupt is enabled.

8.6.1.2 IPLL Lock Interrupt

The S12XECRG generates a IPLL Lock interrupt when the LOCK condition of the IPLL has changed, either from a locked state to an unlocked state or vice versa. Lock interrupts are locally disabled by setting the LOCKIE bit to zero. The IPLL Lock interrupt flag (LOCKIF) is set to1 when the LOCK condition has changed, and is cleared to 0 by writing a 1 to the LOCKIF bit.

8.6.1.3 Self Clock Mode Interrupt

The S12XECRG generates a Self Clock Mode interrupt when the SCM condition of the system has changed, either entered or exited Self Clock Mode. SCM conditions are caused by a failing clock quality check after power on reset (POR) or low voltage reset (LVR) or recovery from Full Stop Mode (PSTP = 0) or Clock Monitor failure. For details on the clock quality check refer to Section 8.4.1.4, “Clock Quality Checker”. If the clock monitor is enabled (CME = 1) a loss of external clock will also cause a SCM condition (SCME = 1).

SCM interrupts are locally disabled by setting the SCMIE bit to zero. The SCM interrupt flag (SCMIF) is set to1 when the SCM condition has changed, and is cleared to 0 by writing a 1 to the SCMIF bit.

Chapter 9
Pierce Oscillator (S12XOSCLCPV2)

Table 9-1. Revision History

Revision Number	Revision Date	Sections Affected	Description of Changes
V01.05	19 Jul 2006		- All xclks info was removed
V02.00	04 Aug 2006		- Incremented revision to match the design system spec revision

9.1 Introduction

The Pierce oscillator (XOSC) module provides a robust, low-noise and low-power clock source. The module will be operated from the V_{DDPLL} supply rail (1.8 V nominal) and require the minimum number of external components. It is designed for optimal start-up margin with typical crystal oscillators.

9.1.1 Features

The XOSC will contain circuitry to dynamically control current gain in the output amplitude. This ensures a signal with low harmonic distortion, low power and good noise immunity.

- High noise immunity due to input hysteresis
- Low RF emissions with peak-to-peak swing limited dynamically
- Transconductance (gm) sized for optimum start-up margin for typical oscillators
- Dynamic gain control eliminates the need for external current limiting resistor
- Integrated resistor eliminates the need for external bias resistor in loop controlled Pierce mode.
- Low power consumption:
  - Operates from 1.8 V (nominal) supply
  - Amplitude control limits power
- Clock monitor

9.1.2 Modes of Operation

Two modes of operation exist:

1. Loop controlled Pierce (LCP) oscillator
2. External square wave mode featuring also full swing Pierce (FSP) without internal bias resistor

The oscillator mode selection is described in the Device Overview section, subsection Oscillator Configuration.

9.1.3 Block Diagram

Figure 9-1 shows a block diagram of the XOSC.

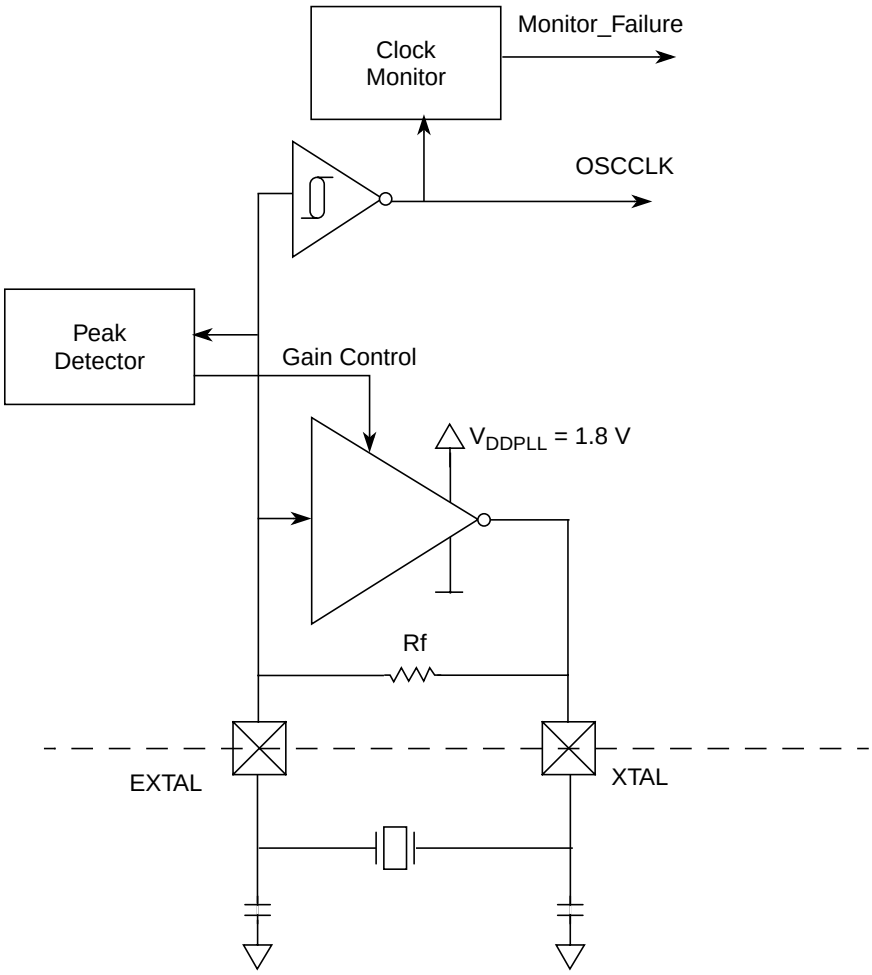

Figure 9-1. XOSC Block Diagram

9.2 External Signal Description

This section lists and describes the signals that connect off chip

9.2.1 VDDPLL and VSSPLL — Operating and Ground Voltage Pins

Theses pins provides operating voltage (V_{DDPLL}) and ground (V_{SSPLL}) for the XOSC circuitry. This allows the supply voltage to the XOSC to use an independent bypass capacitor.

9.2.2 EXTAL and XTAL — Input and Output Pins

These pins provide the interface for either a crystal or a 1.8V CMOS compatible clock to control the internal clock generator circuitry. EXTAL is the external clock input or the input to the crystal oscillator amplifier. XTAL is the output of the crystal oscillator amplifier. The MCU internal system clock is derived

from the EXTAL input frequency. In full stop mode (PSTP = 0), the EXTAL pin is pulled down by an internal resistor of typical 200 kΩ.

NOTE

Freescale recommends an evaluation of the application board and chosen resonator or crystal by the resonator or crystal supplier.

Loop controlled circuit is not suited for overtone resonators and crystals.

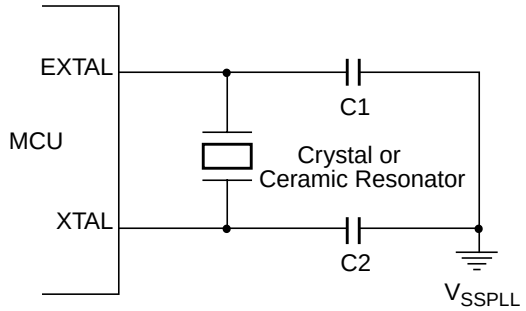

Figure 9-2. Loop Controlled Pierce Oscillator Connections (LCP mode selected)

NOTE

Full swing Pierce circuit is not suited for overtone resonators and crystals without a careful component selection.

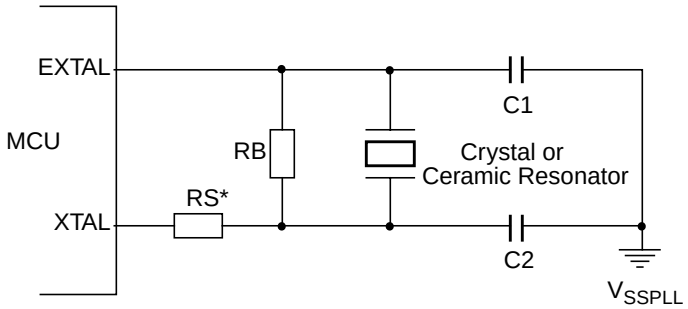

* R_S can be zero (shorted) when use with higher frequency crystals. Refer to manufacturer's data.

Figure 9-3. Full Swing Pierce Oscillator Connections (FSP mode selected)

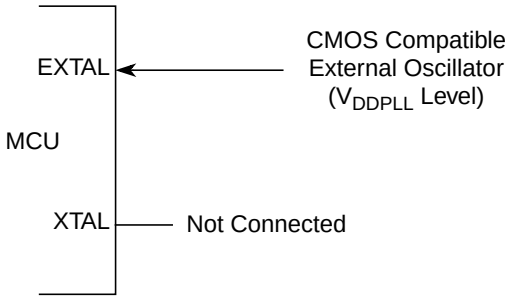

Figure 9-4. External Clock Connections (FSP mode selected)

9.3 Memory Map and Register Definition

The CRG contains the registers and associated bits for controlling and monitoring the oscillator module.

9.4 Functional Description

The XOSC module has control circuitry to maintain the crystal oscillator circuit voltage level to an optimal level which is determined by the amount of hysteresis being used and the maximum oscillation range.

The oscillator block has two external pins, EXTAL and XTAL. The oscillator input pin, EXTAL, is intended to be connected to either a crystal or an external clock source. The XTAL pin is an output signal that provides crystal circuit feedback.

A buffered EXTAL signal becomes the internal clock. To improve noise immunity, the oscillator is powered by the VDDPLL and VSSPLL power supply pins.

9.4.1 Gain Control

In LCP mode a closed loop control system will be utilized whereby the amplifier is modulated to keep the output waveform sinusoidal and to limit the oscillation amplitude. The output peak to peak voltage will be kept above twice the maximum hysteresis level of the input buffer. Electrical specification details are provided in the Electrical Characteristics appendix.

9.4.2 Clock Monitor

The clock monitor circuit is based on an internal RC time delay so that it can operate without any MCU clocks. If no OSCCLK edges are detected within this RC time delay, the clock monitor indicates failure which asserts self-clock mode or generates a system reset depending on the state of SCME bit. If the clock monitor is disabled or the presence of clocks is detected no failure is indicated.The clock monitor function is enabled/disabled by the CME control bit, described in the CRG block description chapter.

9.4.3 Wait Mode Operation

During wait mode, XOSC is not impacted.

9.4.4 Stop Mode Operation

XOSC is placed in a static state when the part is in stop mode except when pseudo-stop mode is enabled. During pseudo-stop mode, XOSC is not impacted.

Chapter 10
Analog-to-Digital Converter (ADC12B16CV1)

Table 10-1. Revision History

Revision Number	Revision Date	Sections Affected	Description of Changes
V01.00	13 Oct. 2005		Initial version
V01.01	04 Mar. 2008		corrected reference to DJM bit

10.1 Introduction

The ADC12B16C is a 16-channel, 12-bit, multiplexed input successive approximation analog-to-digital converter. Refer to device electrical specifications for ATD accuracy.

10.1.1 Features

- 8-, 10-, or 12-bit resolution.
- Conversion in Stop Mode using internally generated clock
- Automatic return to low power after conversion sequence
- Automatic compare with interrupt for higher than or less/equal than programmable value
- Programmable sample time.
- Left/right justified result data.
- External trigger control.
- Sequence complete interrupt.
- Analog input multiplexer for 16 analog input channels.
- Special conversions for V_{RH}, V_{RL}, $(V_{RL}+V_{RH})/2$.
- 1-to-16 conversion sequence lengths.
- Continuous conversion mode.
- Multiple channel scans.
- Configurable external trigger functionality on any AD channel or any of four additional trigger inputs. The four additional trigger inputs can be chip external or internal. Refer to device specification for availability and connectivity.
- Configurable location for channel wrap around (when converting multiple channels in a sequence).

10.1.2 Modes of Operation

10.1.2.1 Conversion Modes

There is software programmable selection between performing **single** or **continuous conversion** on a **single channel** or **multiple channels**.

10.1.2.2 MCU Operating Modes

- **Stop Mode**
  - **ICLKSTP=0 (in ATDCTL2 register)**
    Entering Stop Mode aborts any conversion sequence in progress and if a sequence was aborted restarts it after exiting stop mode. This has the same effect/consequences as starting a conversion sequence with write to ATDCTL5. So after exiting from stop mode with a previously aborted sequence all flags are cleared etc.
  - **ICLKSTP=1 (in ATDCTL2 register)**
    A/D conversion sequence seamless continues in Stop Mode based on the internally generated clock ICLK as ATD clock. For conversions during transition from Run to Stop Mode or vice versa the result is not written to the results register, no CCF flag is set and no compare is done. When converting in Stop Mode (ICLKSTP=1) an ATD Stop Recovery time $t_{ATDSTPRCV}$ is required to switch back to bus clock based ATDCLK when leaving Stop Mode. Do not access ATD registers during this time.
- **Wait Mode**
  ADC12B16C behaves same in Run and Wait Mode. For reduced power consumption continuos conversions should be aborted before entering Wait mode.
- **Freeze Mode**
  In Freeze Mode the ADC12B16C will either continue or finish or stop converting according to the FRZ1 and FRZ0 bits. This is useful for debugging and emulation.

10.1.3 Block Diagram

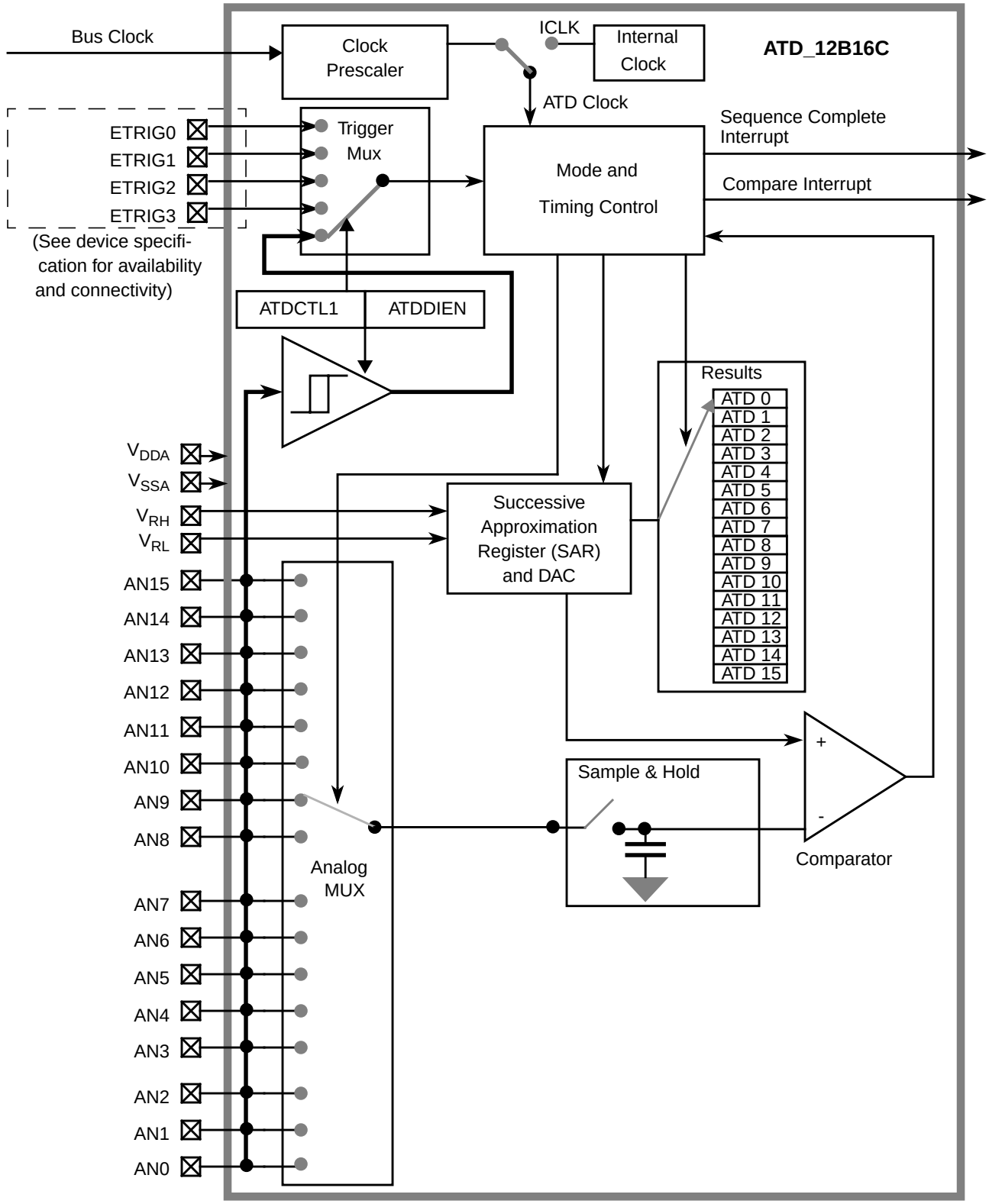

Figure 10-1. ADC12B16C Block Diagram

10.1.4 Block Diagram of Input structure

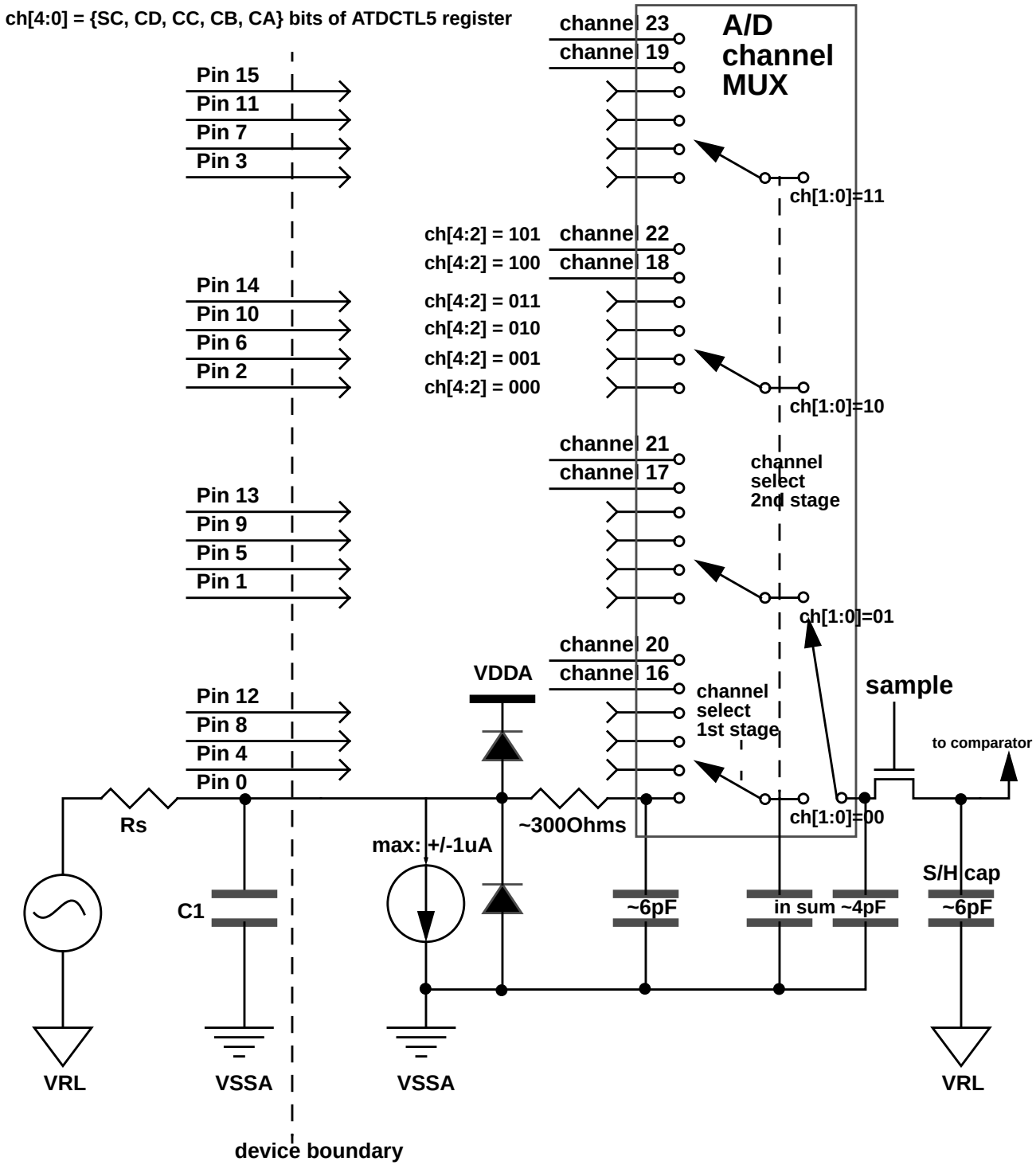

Figure 10-2. ADC12B16C Block Diagram of Input Structure

10.2 Signal Description

This section lists all inputs to the ADC12B16C block.

10.2.1 Detailed Signal Descriptions

10.2.1.1 AN*x* (*x* = 15, 14, 13, 12, 11, 10, 9, 8, 7, 6, 5, 4, 3, 2, 1, 0)

This pin serves as the analog input Channel *x*. It can also be configured as digital port or external trigger for the ATD conversion.

10.2.1.2 ETRIG3, ETRIG2, ETRIG1, ETRIG0

These inputs can be configured to serve as an external trigger for the ATD conversion.

Refer to device specification for availability and connection of these inputs!

10.2.1.3 V_{RH}, V_{RL}

V_{RH} is the high reference voltage, V_{RL} is the low reference voltage for ATD conversion.

10.2.1.4 V_{DDA}, V_{SSA}

These pins are the power supplies for the analog circuitry of the ADC12B16C block.

10.3 Memory Map and Register Definition

This section provides a detailed description of all registers accessible in the ADC12B16C.

10.3.1 Module Memory Map

Figure 10-3 gives an overview on all ADC12B16C registers.

NOTE

Register Address = Base Address + Address Offset, where the Base Address is defined at the MCU level and the Address Offset is defined at the module level.

Address	Name		Bit 7	6	5	4	3	2	1	Bit 0
0x0000	ATDCTL0	R	Reserved	0	0	0	WRAP3	WRAP2	WRAP1	WRAP0
		W								
0x0001	ATDCTL1	R/W	ETRIGSEL	SRES1	SRES0	SMP_DIS	ETRIGCH3	ETRIGCH2	ETRIGCH1	ETRIGCH0
0x0002	ATDCTL2	R	0	AFFC	ICLKSTP	ETRIGLE	ETRIGP	ETRIGE	ASCIE	ACMPIE
		W								
0x0003	ATDCTL3	R/W	DJM	S8C	S4C	S2C	S1C	FIFO	FRZ1	FRZ0
0x0004	ATDCTL4	R/W	SMP2	SMP1	SMP0	PRS[4:0]				
0x0005	ATDCTL5	R	0	SC	SCAN	MULT	CD	CC	CB	CA
		W								
0x0006	ATDSTAT0	R	SCF	0	ETORF	FIFOR	CC3	CC2	CC1	CC0
		W								
0x0007	Unimple-mented	R	0	0	0	0	0	0	0	0
		W								
0x0008	ATDCMPEH	R/W	CMPE[15:8]							
0x0009	ATDCMPEL	R/W	CMPE[7:0]							
0x000A	ATDSTAT2H	R	CCF[15:8]							
		W								
0x000B	ATDSTAT2L	R	CCF[7:0]							
		W								
0x000C	ATDDIENH	R/W	IEN[15:8]							
0x000D	ATDDIENL	R/W	IEN[7:0]							
0x000E	ATDCMPHTH	R/W	CMPHT[15:8]							
0x000F	ATDCMPHTL	R/W	CMPHT[7:0]							
0x0010	ATDDR0	R/W	See Section 10.3.2.12.1, “Left Justified Result Data (DJM=0)” and Section 10.3.2.12.2, “Right Justified Result Data (DJM=1)”							
0x0012	ATDDR1	R/W	See Section 10.3.2.12.1, “Left Justified Result Data (DJM=0)” and Section 10.3.2.12.2, “Right Justified Result Data (DJM=1)”							
0x0014	ATDDR2	R/W	See Section 10.3.2.12.1, “Left Justified Result Data (DJM=0)” and Section 10.3.2.12.2, “Right Justified Result Data (DJM=1)”							
0x0016	ATDDR3	R/W	See Section 10.3.2.12.1, “Left Justified Result Data (DJM=0)” and Section 10.3.2.12.2, “Right Justified Result Data (DJM=1)”							
0x0018	ATDDR4	R/W	See Section 10.3.2.12.1, “Left Justified Result Data (DJM=0)” and Section 10.3.2.12.2, “Right Justified Result Data (DJM=1)”							
0x001A	ATDDR5	R/W	See Section 10.3.2.12.1, “Left Justified Result Data (DJM=0)” and Section 10.3.2.12.2, “Right Justified Result Data (DJM=1)”							
0x001C	ATDDR6	R/W	See Section 10.3.2.12.1, “Left Justified Result Data (DJM=0)” and Section 10.3.2.12.2, “Right Justified Result Data (DJM=1)”							

= Unimplemented or Reserved

Figure 10-3. ADC12B16C Register Summary (Sheet 1 of 2)

Address	Name		Bit 7	6	5	4	3	2	1	Bit 0
0x001E	ATDDR7	R W	See Section 10.3.2.12.1, “Left Justified Result Data (DJM=0)” and Section 10.3.2.12.2, “Right Justified Result Data (DJM=1)”							
0x0020	ATDDR8	R W	See Section 10.3.2.12.1, “Left Justified Result Data (DJM=0)” and Section 10.3.2.12.2, “Right Justified Result Data (DJM=1)”							
0x0022	ATDDR9	R W	See Section 10.3.2.12.1, “Left Justified Result Data (DJM=0)” and Section 10.3.2.12.2, “Right Justified Result Data (DJM=1)”							
0x0024	ATDDR10	R W	See Section 10.3.2.12.1, “Left Justified Result Data (DJM=0)” and Section 10.3.2.12.2, “Right Justified Result Data (DJM=1)”							
0x0026	ATDDR11	R W	See Section 10.3.2.12.1, “Left Justified Result Data (DJM=0)” and Section 10.3.2.12.2, “Right Justified Result Data (DJM=1)”							
0x0028	ATDDR12	R W	See Section 10.3.2.12.1, “Left Justified Result Data (DJM=0)” and Section 10.3.2.12.2, “Right Justified Result Data (DJM=1)”							
0x002A	ATDDR13	R W	See Section 10.3.2.12.1, “Left Justified Result Data (DJM=0)” and Section 10.3.2.12.2, “Right Justified Result Data (DJM=1)”							
0x002C	ATDDR14	R W	See Section 10.3.2.12.1, “Left Justified Result Data (DJM=0)” and Section 10.3.2.12.2, “Right Justified Result Data (DJM=1)”							
0x002E	ATDDR15	R W	See Section 10.3.2.12.1, “Left Justified Result Data (DJM=0)” and Section 10.3.2.12.2, “Right Justified Result Data (DJM=1)”							

= Unimplemented or Reserved

Figure 10-3. ADC12B16C Register Summary (Sheet 2 of 2)

10.3.2 Register Descriptions

This section describes in address order all the ADC12B16C registers and their individual bits.

10.3.2.1 ATD Control Register 0 (ATDCTL0)

Writes to this register will abort current conversion sequence.

Module Base + 0x0000

	7	6	5	4	3	2	1	0
R	Reserved	0	0	0	WRAP3	WRAP2	WRAP1	WRAP0
W								
Reset	0	0	0	0	1	1	1	1

= Unimplemented or Reserved

Figure 10-4. ATD Control Register 0 (ATDCTL0)

Read: Anytime

Write: Anytime, in special modes always write 0 to Reserved Bit 7.

Table 10-2. ATDCTL0 Field Descriptions

Field	Description
3-0 WRAP[3-0]	**Wrap Around Channel Select Bits** — These bits determine the channel for wrap around when doing multi-channel conversions. The coding is summarized in Table 10-3.

Table 10-3. Multi-Channel Wrap Around Coding

WRAP3	WRAP2	WRAP1	WRAP0	Multiple Channel Conversions (MULT = 1) Wraparound to AN0 after Converting
0	0	0	0	Reserved[1]
0	0	0	1	AN1
0	0	1	0	AN2
0	0	1	1	AN3
0	1	0	0	AN4
0	1	0	1	AN5
0	1	1	0	AN6
0	1	1	1	AN7
1	0	0	0	AN8
1	0	0	1	AN9
1	0	1	0	AN10
1	0	1	1	AN11
1	1	0	0	AN12
1	1	0	1	AN13
1	1	1	0	AN14
1	1	1	1	AN15

[1]If only AN0 should be converted use MULT=0.

10.3.2.2 ATD Control Register 1 (ATDCTL1)

Writes to this register will abort current conversion sequence.

Module Base + 0x0001

	7	6	5	4	3	2	1	0
R/W	ETRIGSEL	SRES1	SRES0	SMP_DIS	ETRIGCH3	ETRIGCH2	ETRIGCH1	ETRIGCH0
Reset	0	0	1	0	1	1	1	1

Figure 10-5. ATD Control Register 1 (ATDCTL1)

Read: Anytime

Write: Anytime

Table 10-4. ATDCTL1 Field Descriptions

Field	Description
7 ETRIGSEL	**External Trigger Source Select** — This bit selects the external trigger source to be either one of the AD channels or one of the ETRIG3-0 inputs. See device specification for availability and connectivity of ETRIG3-0 inputs. If a particular ETRIG3-0 input option is not available, writing a 1 to ETRISEL only sets the bit but has not effect, this means that one of the AD channels (selected by ETRIGCH3-0) is configured as the source for external trigger. The coding is summarized in Table 10-6.
6–5 SRES[1:0]	**A/D Resolution Select** — These bits select the resolution of A/D conversion results. See Table 10-5 for coding.
4 SMP_DIS	**Discharge Before Sampling Bit** 0 No discharge before sampling. 1 The internal sample capacitor is discharged before sampling the channel. This adds 2 ATD clock cycles to the sampling time. This can help to detect an open circuit instead of measuring the previous sampled channel.
3–0 ETRIGCH[3:0]	**External Trigger Channel Select** — These bits select one of the AD channels or one of the ETRIG3-0 inputs as source for the external trigger. The coding is summarized in Table 10-6.

Table 10-5. A/D Resolution Coding

SRES1	SRES0	A/D Resolution
0	0	8-bit data
0	1	10-bit data
1	0	12-bit data
1	1	Reserved

Table 10-6. External Trigger Channel Select Coding

ETRIGSEL	ETRIGCH3	ETRIGCH2	ETRIGCH1	ETRIGCH0	External trigger source is
0	0	0	0	0	AN0
0	0	0	0	1	AN1
0	0	0	1	0	AN2
0	0	0	1	1	AN3
0	0	1	0	0	AN4
0	0	1	0	1	AN5
0	0	1	1	0	AN6
0	0	1	1	1	AN7
0	1	0	0	0	AN8
0	1	0	0	1	AN9
0	1	0	1	0	AN10
0	1	0	1	1	AN11
0	1	1	0	0	AN12
0	1	1	0	1	AN13
0	1	1	1	0	AN14
0	1	1	1	1	AN15
1	0	0	0	0	ETRIG0[1]
1	0	0	0	1	ETRIG1[1]

Table 10-6. External Trigger Channel Select Coding

ETRIGSEL	ETRIGCH3	ETRIGCH2	ETRIGCH1	ETRIGCH0	External trigger source is
1	0	0	1	0	ETRIG2[1]
1	0	0	1	1	ETRIG3[1]
1	0	1	X	X	Reserved
1	1	X	X	X	Reserved

[1] Only if ETRIG3-0 input option is available (see device specification), else ETRISEL is ignored, that means external trigger source is still on one of the AD channels selected by ETRIGCH3-0

10.3.2.3 ATD Control Register 2 (ATDCTL2)

Writes to this register will abort current conversion sequence.

Module Base + 0x0002

	7	6	5	4	3	2	1	0
R	0	AFFC	ICLKSTP	ETRIGLE	ETRIGP	ETRIGE	ASCIE	ACMPIE
W								
Reset	0	0	0	0	0	0	0	0

= Unimplemented or Reserved

Figure 10-6. ATD Control Register 2 (ATDCTL2)

Read: Anytime

Write: Anytime

Table 10-7. ATDCTL2 Field Descriptions

Field	Description
6 AFFC	**ATD Fast Flag Clear All** 0 ATD flag clearing done by write 1 to respective CCF[*n*] flag. 1 Changes all ATD conversion complete flags to a fast clear sequence. For compare disabled (CMPE[*n*]=0) a read access to the result register will cause the associated CCF[*n*] flag to clear automatically. For compare enabled (CMPE[*n*]=1) a write access to the result register will cause the associated CCF[*n*] flag to clear automatically.
5 ICLKSTP	**Internal Clock in Stop Mode Bit** — This bit enables A/D conversions in stop mode. When going into stop mode and ICLKSTP=1 the ATD conversion clock is automatically switched to the internally generated clock ICLK. Current conversion sequence will seamless continue. Conversion speed will change from prescaled bus frequency to the ICLK frequency (see ATD Electrical Characteristics in device description). The prescaler bits PRS4-0 in ATDCTL4 have no effect on the ICLK frequency. For conversions during stop mode the automatic compare interrupt or the sequence complete interrupt can be used to inform software handler about changing A/D values. External trigger will not work while converting in stop mode. For conversions during transition from Run to Stop Mode or vice versa the result is not written to the results register, no CCF flag is set and no compare is done. When converting in Stop Mode (ICLKSTP=1) an ATD Stop Recovery time $t_{ATDSTPRCV}$ is required to switch back to bus clock based ATDCLK when leaving Stop Mode. Do not access ATD registers during this time. 0 If A/D conversion sequence is ongoing when going into stop mode, the actual conversion sequence will be aborted and automatically restarted when exiting stop mode. 1 A/D continues to convert in stop mode using internally generated clock (ICLK)

Table 10-7. ATDCTL2 Field Descriptions (continued)

Field	Description
4 ETRIGLE	**External Trigger Level/Edge Control** — This bit controls the sensitivity of the external trigger signal. See Table 10-8 for details.
3 ETRIGP	**External Trigger Polarity** — This bit controls the polarity of the external trigger signal. See Table 10-8 for details.
2 ETRIGE	**External Trigger Mode Enable** — This bit enables the external trigger on one of the AD channels or one of the ETRIG3-0 inputs as described in Table 10-6. If external trigger source is one of the AD channels, the digital input buffer of this channel is enabled. The external trigger allows to synchronize the start of conversion with external events. External trigger will not work while converting in stop mode. 0 Disable external trigger 1 Enable external trigger
1 ASCIE	**ATD Sequence Complete Interrupt Enable** 0 ATD Sequence Complete interrupt requests are disabled. 1 ATD Sequence Complete interrupt will be requested whenever SCF=1 is set.
0 ACMPIE	**ATD Compare Interrupt Enable** — If automatic compare is enabled for conversion *n* (CMPE[*n*]=1 in ATDCMPE register) this bit enables the compare interrupt. If the CCF[*n*] flag is set (showing a successful compare for conversion *n*), the compare interrupt is triggered. 0 ATD Compare interrupt requests are disabled. 1 For the conversions in a sequence for which automatic compare is enabled (CMPE[*n*]=1), ATD Compare Interrupt will be requested whenever any of the respective CCF flags is set.

Table 10-8. External Trigger Configurations

ETRIGLE	ETRIGP	External Trigger Sensitivity
0	0	Falling edge
0	1	Rising edge
1	0	Low level
1	1	High level

10.3.2.4 ATD Control Register 3 (ATDCTL3)

Writes to this register will abort current conversion sequence.

Module Base + 0x0003

	7	6	5	4	3	2	1	0
R W	DJM	S8C	S4C	S2C	S1C	FIFO	FRZ1	FRZ0
Reset	0	0	1	0	0	0	0	0

= Unimplemented or Reserved

Figure 10-7. ATD Control Register 3 (ATDCTL3)

Read: Anytime

Write: Anytime

Field	Description
7 DJM	**Result Register Data Justification** — Result data format is always unsigned. This bit controls justification of conversion data in the result registers. 0 Left justified data in the result registers. 1 Right justified data in the result registers. Table 10-10 gives examples ATD results for an input signal range between 0 and 5.12 Volts.
6–3 S8C, S4C, S2C, S1C	**Conversion Sequence Length** — These bits control the number of conversions per sequence. Table 10-11 shows all combinations. At reset, S4C is set to 1 (sequence length is 4). This is to maintain software continuity to HC12 family.
2 FIFO	**Result Register FIFO Mode** — If this bit is zero (non-FIFO mode), the A/D conversion results map into the result registers based on the conversion sequence; the result of the first conversion appears in the first result register (ATDDR0), the second result in the second result register (ATDDR1), and so on. If this bit is one (FIFO mode) the conversion counter is not reset at the beginning or ending of a conversion sequence; sequential conversion results are placed in consecutive result registers. In a continuously scanning conversion sequence, the result register counter will wrap around when it reaches the end of the result register file. The conversion counter value (CC3-0 in ATDSTAT0) can be used to determine where in the result register file, the current conversion result will be placed. Aborting a conversion or starting a new conversion clears the conversion counter even if FIFO=1. So the first result of a new conversion sequence, started by writing to ATDCTL5, will always be place in the first result register (ATDDDR0). Intended usage of FIFO mode is continuos conversion (SCAN=1) or triggered conversion (ETRIG=1). Which result registers hold valid data can be tracked using the conversion complete flags. Fast flag clear mode may or may not be useful in a particular application to track valid data. If this bit is one, automatic compare of result registers is always disabled, that is ADC12B16C will behave as if ACMPIE and all CPME[*n*] were zero. 0 Conversion results are placed in the corresponding result register up to the selected sequence length. 1 Conversion results are placed in consecutive result registers (wrap around at end).
1–0 FRZ[1:0]	**Background Debug Freeze Enable** — When debugging an application, it is useful in many cases to have the ATD pause when a breakpoint (Freeze Mode) is encountered. These 2 bits determine how the ATD will respond to a breakpoint as shown in Table 10-12. Leakage onto the storage node and comparator reference capacitors may compromise the accuracy of an immediately frozen conversion depending on the length of the freeze period.

Table 10-9. ATDCTL3 Field Descriptions

Table 10-10. Examples of ideal decimal ATD Results

Input Signal V_{RL} = 0 Volts V_{RH} = 5.12 Volts	8-Bit Codes (resolution=20mV)	10-Bit Codes (resolution=5mV)	12-Bit Codes (transfer curve has 1.25mV offset) (resolution=1.25mV)
5.120 Volts	255	1023	4095
...	...	...	...
0.022	1	4	17
0.020	1	4	16
0.018	1	4	14
0.016	1	3	12
0.014	1	3	11
0.012	1	2	9
0.010	1	2	8
0.008	0	2	6
0.006	0	1	4
0.004	0	1	3
0.003	0	0	2
0.002	0	0	1
0.000	0	0	0

Table 10-11. Conversion Sequence Length Coding

S8C	S4C	S2C	S1C	Number of Conversions per Sequence
0	0	0	0	16
0	0	0	1	1
0	0	1	0	2
0	0	1	1	3
0	1	0	0	4
0	1	0	1	5
0	1	1	0	6
0	1	1	1	7
1	0	0	0	8
1	0	0	1	9
1	0	1	0	10
1	0	1	1	11
1	1	0	0	12
1	1	0	1	13
1	1	1	0	14
1	1	1	1	15

Table 10-12. ATD Behavior in Freeze Mode (Breakpoint)

FRZ1	FRZ0	Behavior in Freeze Mode
0	0	Continue conversion
0	1	Reserved
1	0	Finish current conversion, then freeze

Table 10-12. ATD Behavior in Freeze Mode (Breakpoint)

FRZ1	FRZ0	Behavior in Freeze Mode
1	1	Freeze Immediately

10.3.2.5 ATD Control Register 4 (ATDCTL4)

Writes to this register will abort current conversion sequence.

Module Base + 0x0004

	7	6	5	4	3	2	1	0
R W	SMP2	SMP1	SMP0	PRS[4:0]				
Reset	0	0	0	0	0	1	0	1

Figure 10-8. ATD Control Register 4 (ATDCTL4)

Read: Anytime

Write: Anytime

Table 10-13. ATDCTL4 Field Descriptions

Field	Description
7–5 SMP[2:0]	**Sample Time Select** — These three bits select the length of the sample time in units of ATD conversion clock cycles. Note that the ATD conversion clock period is itself a function of the prescaler value (bits PRS4-0). Table 10-14 lists the available sample time lengths.
4–0 PRS[4:0]	**ATD Clock Prescaler** — These 5 bits are the binary prescaler value PRS. The ATD conversion clock frequency is calculated as follows: $f_{ATDCLK} = \frac{f_{BUS}}{2 \times (PRS + 1)}$ Refer to Device Specification for allowed frequency range of f_{ATDCLK}.

Table 10-14. Sample Time Select

SMP2	SMP1	SMP0	Sample Time in Number of ATD Clock Cycles
0	0	0	4
0	0	1	6
0	1	0	8
0	1	1	10
1	0	0	12
1	0	1	16
1	1	0	20
1	1	1	24

10.3.2.6 ATD Control Register 5 (ATDCTL5)

Writes to this register will abort current conversion sequence and start a new conversion sequence. If external trigger is enabled (ETRIGE=1) an initial write to ATDCTL5 is required to allow starting of a conversion sequence which will then occur on each trigger event. Start of conversion means the beginning of the sampling phase.

Module Base + 0x0005

	7	6	5	4	3	2	1	0
R	0	SC	SCAN	MULT	CD	CC	CB	CA
W								
Reset	0	0	0	0	0	0	0	0

Figure 10-9. ATD Control Register 5 (ATDCTL5)

Read: Anytime

Write: Anytime

Table 10-15. ATDCTL5 Field Descriptions

Field	Description
6 SC	**Special Channel Conversion Bit** — If this bit is set, then special channel conversion can be selected using CD, CC, CB and CA of ATDCTL5. Table 10-16 lists the coding. 0 Special channel conversions disabled 1 Special channel conversions enabled
5 SCAN	**Continuous Conversion Sequence Mode** — This bit selects whether conversion sequences are performed continuously or only once. If external trigger is enabled (ETRIGE=1) setting this bit has no effect, that means external trigger always starts a single conversion sequence. 0 Single conversion sequence 1 Continuous conversion sequences (scan mode)
4 MULT	**Multi-Channel Sample Mode** — When MULT is 0, the ATD sequence controller samples only from the specified analog input channel for an entire conversion sequence. The analog channel is selected by channel selection code (control bits CD/CC/CB/CA located in ATDCTL5). When MULT is 1, the ATD sequence controller samples across channels. The number of channels sampled is determined by the sequence length value (S8C, S4C, S2C, S1C). The first analog channel examined is determined by channel selection code (CD, CC, CB, CA control bits); subsequent channels sampled in the sequence are determined by incrementing the channel selection code or wrapping around to AN0 (channel 0). 0 Sample only one channel 1 Sample across several channels
3–0 CD, CC, CB, CA	**Analog Input Channel Select Code** — These bits select the analog input channel(s) whose signals are sampled and converted to digital codes. Table 10-16 lists the coding used to select the various analog input channels. In the case of single channel conversions (MULT=0), this selection code specifies the channel to be examined. In the case of multiple channel conversions (MULT=1), this selection code specifies the first channel to be examined in the conversion sequence. Subsequent channels are determined by incrementing the channel selection code or wrapping around to AN0 (after converting the channel defined by the Wrap Around Channel Select Bits WRAP3-0 in ATDCTL0). In case of starting with a channel number higher than the one defined by WRAP3-0 the first wrap around will be AN15 to AN0.

Table 10-16. Analog Input Channel Select Coding

SC	CD	CC	CB	CA	Analog Input Channel
0	0	0	0	0	AN0
	0	0	0	1	AN1
	0	0	1	0	AN2
	0	0	1	1	AN3
	0	1	0	0	AN4
	0	1	0	1	AN5
	0	1	1	0	AN6
	0	1	1	1	AN7
	1	0	0	0	AN8
	1	0	0	1	AN9
	1	0	1	0	AN10
	1	0	1	1	AN11
	1	1	0	0	AN12
	1	1	0	1	AN13
	1	1	1	0	AN14
	1	1	1	1	AN15
1	0	0	0	0	Reserved
	0	0	0	1	Reserved
	0	0	1	X	Reserved
	0	1	0	0	V_{RH}
	0	1	0	1	V_{RL}
	0	1	1	0	$(V_{RH}+V_{RL}) / 2$
	0	1	1	1	Reserved
	1	X	X	X	Reserved

10.3.2.7 ATD Status Register 0 (ATDSTAT0)

This register contains the Sequence Complete Flag, overrun flags for external trigger and FIFO mode, and the conversion counter.

Module Base + 0x0006

	7	6	5	4	3	2	1	0
R	SCF	0	ETORF	FIFOR	CC3	CC2	CC1	CC0
W								
Reset	0	0	0	0	0	0	0	0

= Unimplemented or Reserved

Figure 10-10. ATD Status Register 0 (ATDSTAT0)

Read: Anytime

Write: Anytime (No effect on (CC3, CC2, CC1, CC0))

Table 10-17. ATDSTAT0 Field Descriptions

Field	Description
7 SCF	**Sequence Complete Flag** — This flag is set upon completion of a conversion sequence. If conversion sequences are continuously performed (SCAN=1), the flag is set after each one is completed. This flag is cleared when one of the following occurs: A) Write “1” to SCF B) Write to ATDCTL5 (a new conversion sequence is started) C) If AFFC=1 and read of a result register 0 Conversion sequence not completed 1 Conversion sequence has completed
5 ETORF	**External Trigger Overrun Flag** — While in edge trigger mode (ETRIGLE=0), if additional active edges are detected while a conversion sequence is in process the overrun flag is set. This flag is cleared when one of the following occurs: A) Write “1” to ETORF B) Write to ATDCTL0,1,2,3,4, ATDCMPE or ATDCMPHT (a conversion sequence is aborted) C) Write to ATDCTL5 (a new conversion sequence is started) 0 No External trigger over run error has occurred 1 External trigger over run error has occurred
4 FIFOR	**Result Register Over Run Flag** — This bit indicates that a result register has been written to before its associated conversion complete flag (CCF) has been cleared. This flag is most useful when using the FIFO mode because the flag potentially indicates that result registers are out of sync with the input channels. However, it is also practical for non-FIFO modes, and indicates that a result register has been over written before it has been read (i.e. the old data has been lost). This flag is cleared when one of the following occurs: A) Write “1” to FIFOR B) Write to ATDCTL0,1,2,3,4, ATDCMPE or ATDCMPHT (a conversion sequence is aborted) C) Write to ATDCTL5 (a new conversion sequence is started) 0 No over run has occurred 1 Overrun condition exists (result register has been written while associated CCFx flag was still set)
3–0 CC[3:0]	**Conversion Counter** — These 4 read-only bits are the binary value of the conversion counter. The conversion counter points to the result register that will receive the result of the current conversion. E.g. CC3=0, CC2=1, CC1=1, CC0=0 indicates that the result of the current conversion will be in ATD Result Register 6. If in non-FIFO mode (FIFO=0) the conversion counter is initialized to zero at the begin and end of the conversion sequence. If in FIFO mode (FIFO=1) the register counter is not initialized. The conversion counters wraps around when its maximum value is reached. Aborting a conversion or starting a new conversion clears the conversion counter even if FIFO=1.

10.3.2.8 ATD Compare Enable Register (ATDCMPE)

Writes to this register will abort current conversion sequence.

Read: Anytime

Write: Anytime

Module Base + 0x0008

	15	14	13	12	11	10	9	8	7	6	5	4	3	2	1	0
R W	CMPE[15:0]															
Reset	0	0	0	0	0	0	0	0	0	0	0	0	0	0	0	0

Figure 10-11. ATD Compare Enable Register (ATDCMPE)

Table 10-18. ATDCMPE Field Descriptions

Field	Description
15–0 CMPE[15:0]	**Compare Enable for Conversion Number *n* (*n*= 15, 14, 13, 12, 11, 10, 9, 8, 7, 6, 5, 4, 3, 2, 1, 0) of a Sequence** — These bits enable automatic compare of conversion results individually for conversions of a sequence. The sense of each comparison is determined by the CMPHT[*n*] bit in the ATDCMPHT register. For each conversion number with CMPE[*n*]=1 do the following: 1) Write compare value to ATDDR*n* result register 2) Write compare operator with CMPHT[*n*] in ATDCPMHT register CCF[*n*] in ATDSTAT2 register will flag individual success of any comparison. 0 No automatic compare 1 Automatic compare of results for conversion *n* of a sequence is enabled.

10.3.2.9 ATD Status Register 2 (ATDSTAT2)

This read-only register contains the Conversion Complete Flags CCF[15:0].

Module Base + 0x000A

	15	14	13	12	11	10	9	8	7	6	5	4	3	2	1	0
R	CCF[15:0]															
W																
Reset	0	0	0	0	0	0	0	0	0	0	0	0	0	0	0	0

= Unimplemented or Reserved

Figure 10-12. ATD Status Register 2 (ATDSTAT2)

Read: Anytime

Write: Anytime, no effect

Table 10-19. ATDSTAT2 Field Descriptions

Field	Description
15–0 CCF[15:0]	**Conversion Complete Flag *n* (*n*= 15, 14, 13, 12, 11, 10, 9, 8, 7, 6, 5, 4, 3, 2, 1, 0)** — A conversion complete flag is set at the end of each conversion in a sequence. The flags are associated with the conversion position in a sequence (and also the result register number). Therefore in non-fifo mode, CCF[8] is set when the ninth conversion in a sequence is complete and the result is available in result register ATDDR8; CCF[9] is set when the tenth conversion in a sequence is complete and the result is available in ATDDR9, and so forth. If automatic compare of conversion results is enabled (CMPE[*n*]=1 in ATDCMPE), the conversion complete flag is only set if comparison with ATDDR*n* is true and if ACMPIE=1 a compare interrupt will be requested. In this case, as the ATDDR*n* result register is used to hold the compare value, the result will not be stored there at the end of the conversion but is lost. A flag CCF[*n*] is cleared when one of the following occurs: A) Write to ATDCTL5 (a new conversion sequence is started) B) If AFFC=0, write “1” to CCF[*n*] C) If AFFC=1 and CMPE[*n*]=0, read of result register ATDDR*n* D) If AFFC=1 and CMPE[*n*]=1, write to result register ATDDR*n* In case of a concurrent set and clear on CCF[*n*]: The clearing by method A) will overwrite the set. The clearing by methods B) or C) or D) will be overwritten by the set. 0 Conversion number *n* not completed or successfully compared 1 If (CMPE[*n*]=0): Conversion number *n* has completed. Result is ready in ATDDR*n*. If (CMPE[*n*]=1): Compare for conversion result number *n* with compare value in ATDDR*n*, using compare operator CMPGT[*n*] is true. (No result available in ATDDR*n*)

10.3.2.10 ATD Input Enable Register (ATDDIEN)

Module Base + 0x000C

	15	14	13	12	11	10	9	8	7	6	5	4	3	2	1	0
R W	IEN[15:0]															
Reset	0	0	0	0	0	0	0	0	0	0	0	0	0	0	0	0

Figure 10-13. ATD Input Enable Register (ATDDIEN)

Read: Anytime

Write: Anytime

Table 10-20. ATDDIEN Field Descriptions

Field	Description
15–0 IEN[15:0]	**ATD Digital Input Enable on channel *x* (*x*= 15, 14, 13, 12, 11, 10, 9, 8, 7, 6, 5, 4, 3, 2, 1, 0)** — This bit controls the digital input buffer from the analog input pin (AN*x*) to the digital data register. 0 Disable digital input buffer to AN*x* pin 1 Enable digital input buffer on AN*x* pin. **Note:** Setting this bit will enable the corresponding digital input buffer continuously. If this bit is set while simultaneously using it as an analog port, there is potentially increased power consumption because the digital input buffer maybe in the linear region.

10.3.2.11 ATD Compare Higher Than Register (ATDCMPHT)

Writes to this register will abort current conversion sequence.

Read: Anytime

Write: Anytime

Module Base + 0x000E

	15	14	13	12	11	10	9	8	7	6	5	4	3	2	1	0
R W	CMPHT[15:0]															
Reset	0	0	0	0	0	0	0	0	0	0	0	0	0	0	0	0

Figure 10-14. ATD Compare Higher Than Register (ATDCMPHT)

Table 10-21. ATDCMPHT Field Descriptions

Field	Description
15–0 CMPHT[15:0]	**Compare Operation Higher Than Enable for conversion number *n* (*n*= 15, 14, 13, 12, 11, 10, 9, 8, 7, 6, 5, 4, 3, 2, 1, 0) of a Sequence** — This bit selects the operator for comparison of conversion results. 0 If result of conversion *n* is **lower or same than** compare value in ATDDR*n*, this is flagged in ATDSTAT2 1 If result of conversion *n* is **higher than** compare value in ATDDR*n*, this is flagged in ATDSTAT2

10.3.2.12 ATD Conversion Result Registers (ATDDR*n*)

The A/D conversion results are stored in 16 result registers. Results are always in unsigned data representation. Left and right justification is selected using the DJM control bit in ATDCTL3.

If automatic compare of conversions results is enabled (CMPE[*n*]=1 in ATDCMPE), these registers must be written with the compare values in left or right justified format depending on the actual value of the DJM bit. In this case, as the ATDDR*n* register is used to hold the compare value, the result will not be stored there at the end of the conversion but is lost.

Read: Anytime

Write: Anytime

NOTE

For conversions not using automatic compare, results are stored in the result registers after each conversion. In this case avoid writing to ATDDRn except for initial values, because an A/D result might be overwritten.

10.3.2.12.1 Left Justified Result Data (DJM=0)

Module Base +
0x0010 = ATDDR0, 0x0012 = ATDDR1, 0x0014 = ATDDR2, 0x0016 = ATDDR3
0x0018 = ATDDR4, 0x001A = ATDDR5, 0x001C = ATDDR6, 0x001E = ATDDR7
0x0020 = ATDDR8, 0x0022 = ATDDR9, 0x0024 = ATDDR10, 0x0026 = ATDDR11
0x0028 = ATDDR12, 0x002A = ATDDR13, 0x002C = ATDDR14, 0x002E = ATDDR15

	15	14	13	12	11	10	9	8	7	6	5	4	3	2	1	0
R	Bit 11	Bit 10	Bit 9	Bit 8	Bit 7	Bit 6	Bit 5	Bit 4	Bit 3	Bit 2	Bit 1	Bit 0	0	0	0	0
W																
Reset	0	0	0	0	0	0	0	0	0	0	0	0	0	0	0	0

Figure 10-15. Left justified ATD conversion result register (ATDDR*n*)

10.3.2.12.2 Right Justified Result Data (DJM=1)

Module Base +
0x0010 = ATDDR0, 0x0012 = ATDDR1, 0x0014 = ATDDR2, 0x0016 = ATDDR3
0x0018 = ATDDR4, 0x001A = ATDDR5, 0x001C = ATDDR6, 0x001E = ATDDR7
0x0020 = ATDDR8, 0x0022 = ATDDR9, 0x0024 = ATDDR10, 0x0026 = ATDDR11
0x0028 = ATDDR12, 0x002A = ATDDR13, 0x002C = ATDDR14, 0x002E = ATDDR15

	15	14	13	12	11	10	9	8	7	6	5	4	3	2	1	0
R	0	0	0	0	Bit 11	Bit 10	Bit 9	Bit 8	Bit 7	Bit 6	Bit 5	Bit 4	Bit 3	Bit 2	Bi1 1	Bit 0
W																
Reset	0	0	0	0	0	0	0	0	0	0	0	0	0	0	0	0

Figure 10-16. Right justified ATD conversion result register (ATDDR*n*)

Table 10-16 shows how depending on the A/D resolution the conversion result is transferred to the ATD result registers. Compare is always done using all 12 bits of both the conversion result and the compare value in ATDDRn.

Table 10-22. Conversion result mapping to ATDDRn

A/D resolution	DJM	conversion result mapping to ATDDR*n*
8-bit data	0	Bit[11:4] = result, Bit[3:0]=0000
8-bit data	1	Bit[7:0] = result, Bit[11:8]=0000
10-bit data	0	Bit[11:2] = result, Bit[1:0]=00
10-bit data	1	Bit[9:0] = result, Bit[11:10]=00
12-bit data	X	Bit[11:0] = result

10.4 Functional Description

The ADC12B16C is structured into an analog sub-block and a digital sub-block.

10.4.1 Analog Sub-Block

The analog sub-block contains all analog electronics required to perform a single conversion. Separate power supplies V_{DDA} and V_{SSA} allow to isolate noise of other MCU circuitry from the analog sub-block.

10.4.1.1 Sample and Hold Machine

The Sample and Hold (S/H) Machine accepts analog signals from the external world and stores them as capacitor charge on a storage node.

During the sample process the analog input connects directly to the storage node.

The input analog signals are unipolar and must fall within the potential range of V_{SSA} to V_{DDA}.

During the hold process the analog input is disconnected from the storage node.

10.4.1.2 Analog Input Multiplexer

The analog input multiplexer connects one of the 16 external analog input channels to the sample and hold machine.

10.4.1.3 Analog-to-Digital (A/D) Machine

The A/D Machine performs analog to digital conversions. The resolution is program selectable at either 8 or 10 or 12 bits. The A/D machine uses a successive approximation architecture. It functions by comparing the stored analog sample potential with a series of digitally generated analog potentials. By following a binary search algorithm, the A/D machine locates the approximating potential that is nearest to the sampled potential.

When not converting the A/D machine is automatically powered down.

Only analog input signals within the potential range of V_{RL} to V_{RH} (A/D reference potentials) will result in a non-railed digital output code.

10.4.2 Digital Sub-Block

This subsection explains some of the digital features in more detail. See Section 10.3.2, "Register Descriptions" for all details.

10.4.2.1 External Trigger Input

The external trigger feature allows the user to synchronize ATD conversions to the external environment events rather than relying on software to signal the ATD module when ATD conversions are to take place. The external trigger signal (out of reset ATD channel 15, configurable in ATDCTL1) is programmable to be edge or level sensitive with polarity control. Table 10-23 gives a brief description of the different combinations of control bits and their effect on the external trigger function.

Table 10-23. External Trigger Control Bits

ETRIGLE	ETRIGP	ETRIGE	SCAN	Description
X	X	0	0	Ignores external trigger. Performs one conversion sequence and stops.
X	X	0	1	Ignores external trigger. Performs continuous conversion sequences.
0	0	1	X	Falling edge triggered. Performs one conversion sequence per trigger.
0	1	1	X	Rising edge triggered. Performs one conversion sequence per trigger.
1	0	1	X	Trigger active low. Performs continuous conversions while trigger is active.
1	1	1	X	Trigger active high. Performs continuous conversions while trigger is active.

During a conversion, if additional active edges are detected the overrun error flag ETORF is set.

In either level or edge triggered modes, the first conversion begins when the trigger is received.

Once ETRIGE is enabled, conversions cannot be started by a write to ATDCTL5, but rather must be triggered externally.

If the level mode is active and the external trigger both de-asserts and re-asserts itself during a conversion sequence, this does not constitute an overrun. Therefore, the flag is not set. If the trigger is left asserted in level mode while a sequence is completing, another sequence will be triggered immediately.

10.4.2.2 General-Purpose Digital Port Operation

The input channel pins can be multiplexed between analog and digital data. As analog inputs, they are multiplexed and sampled as analog channels to the A/D converter. The analog/digital multiplex operation is performed in the input pads. The input pad is always connected to the analog input channels of the ADC12B16C. The input pad signal is buffered to the digital port registers. This buffer can be turned on or off with the ATDDIEN register. This is important so that the buffer does not draw excess current when analog potentials are presented at its input.

10.5 Resets

At reset the ADC12B16C is in a power down state. The reset state of each individual bit is listed within the Register Description section (see Section 10.3.2, “Register Descriptions”) which details the registers and their bit-field.

10.6 Interrupts

The interrupts requested by the ADC12B16C are listed in Table 10-24. Refer to MCU specification for related vector address and priority.

Table 10-24. ATD Interrupt Vectors

Interrupt Source	CCR Mask	Local Enable
Sequence Complete Interrupt	I bit	ASCIE in ATDCTL2
Compare Interrupt	I bit	ACMPIE in ATDCTL2

See Section 10.3.2, “Register Descriptions” for further details.

Chapter 11
Freescale's Scalable Controller Area Network (S12MSCANV3)

Table 11-1. Revision History

Revision Number	Revision Date	Sections Affected	Description of Changes
V03.11	31 Mar 2009		• Orthographic corrections
V03.12	09 Aug 2010	Table 11-37	• Added 'Bosch CAN 2.0A/B' to bit time settings table
V03.13	03 Mar 2011	Figure 11-4 Table 11-3	• Corrected CANE write restrictions • Removed footnote from RXFRM bit

11.1 Introduction

Freescale's scalable controller area network (S12MSCANV3) definition is based on the MSCAN12 definition, which is the specific implementation of the MSCAN concept targeted for the M68HC12 microcontroller family.

The module is a communication controller implementing the CAN 2.0A/B protocol as defined in the Bosch specification dated September 1991. For users to fully understand the MSCAN specification, it is recommended that the Bosch specification be read first to familiarize the reader with the terms and concepts contained within this document.

Though not exclusively intended for automotive applications, CAN protocol is designed to meet the specific requirements of a vehicle serial data bus: real-time processing, reliable operation in the EMI environment of a vehicle, cost-effectiveness, and required bandwidth.

MSCAN uses an advanced buffer arrangement resulting in predictable real-time behavior and simplified application software.

11.1.1 Glossary

Table 11-2. Terminology

ACK	Acknowledge of CAN message
CAN	Controller Area Network
CRC	Cyclic Redundancy Code
EOF	End of Frame
FIFO	First-In-First-Out Memory
IFS	Inter-Frame Sequence
SOF	Start of Frame
CPU bus	CPU related read/write data bus
CAN bus	CAN protocol related serial bus
oscillator clock	Direct clock from external oscillator
bus clock	CPU bus related clock
CAN clock	CAN protocol related clock

11.1.2 Block Diagram

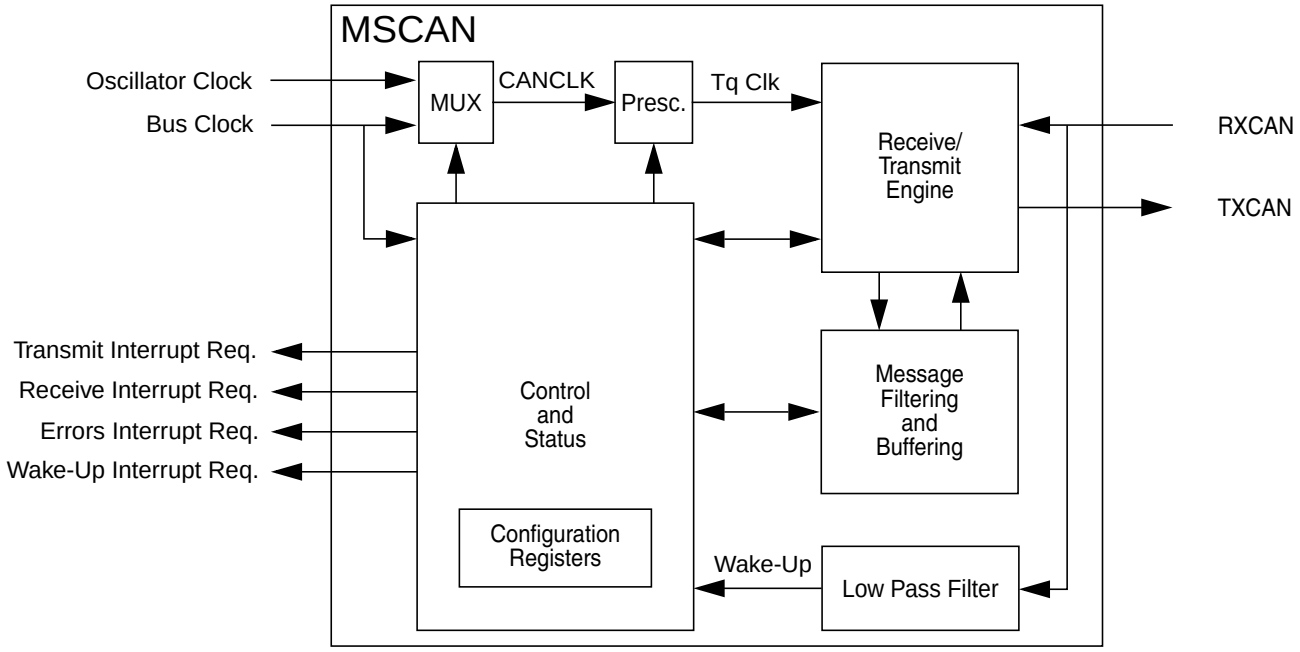

Figure 11-1. MSCAN Block Diagram

11.1.3 Features

The basic features of the MSCAN are as follows:

- Implementation of the CAN protocol — Version 2.0A/B
  - — Standard and extended data frames
  - — Zero to eight bytes data length
  - — Programmable bit rate up to 1 Mbps[1]
  - — Support for remote frames
- Five receive buffers with FIFO storage scheme
- Three transmit buffers with internal prioritization using a "local priority" concept
- Flexible maskable identifier filter supports two full-size (32-bit) extended identifier filters, or four 16-bit filters, or eight 8-bit filters
- Programmable wake-up functionality with integrated low-pass filter
- Programmable loopback mode supports self-test operation
- Programmable listen-only mode for monitoring of CAN bus
- Programmable bus-off recovery functionality
- Separate signalling and interrupt capabilities for all CAN receiver and transmitter error states (warning, error passive, bus-off)
- Programmable MSCAN clock source either bus clock or oscillator clock
- Internal timer for time-stamping of received and transmitted messages
- Three low-power modes: sleep, power down, and MSCAN enable
- Global initialization of configuration registers

11.1.4 Modes of Operation

For a description of the specific MSCAN modes and the module operation related to the system operating modes refer to Section 11.4.4, "Modes of Operation".

1. Depending on the actual bit timing and the clock jitter of the PLL.

11.2 External Signal Description

The MSCAN uses two external pins.

NOTE

On MCUs with an integrated CAN physical interface (transceiver) the MSCAN interface is connected internally to the transceiver interface. In these cases the external availability of signals TXCAN and RXCAN is optional.

11.2.1 RXCAN — CAN Receiver Input Pin

RXCAN is the MSCAN receiver input pin.

11.2.2 TXCAN — CAN Transmitter Output Pin

TXCAN is the MSCAN transmitter output pin. The TXCAN output pin represents the logic level on the CAN bus:

0 = Dominant state
1 = Recessive state

11.2.3 CAN System

A typical CAN system with MSCAN is shown in Figure 11-2. Each CAN station is connected physically to the CAN bus lines through a transceiver device. The transceiver is capable of driving the large current needed for the CAN bus and has current protection against defective CAN or defective stations.

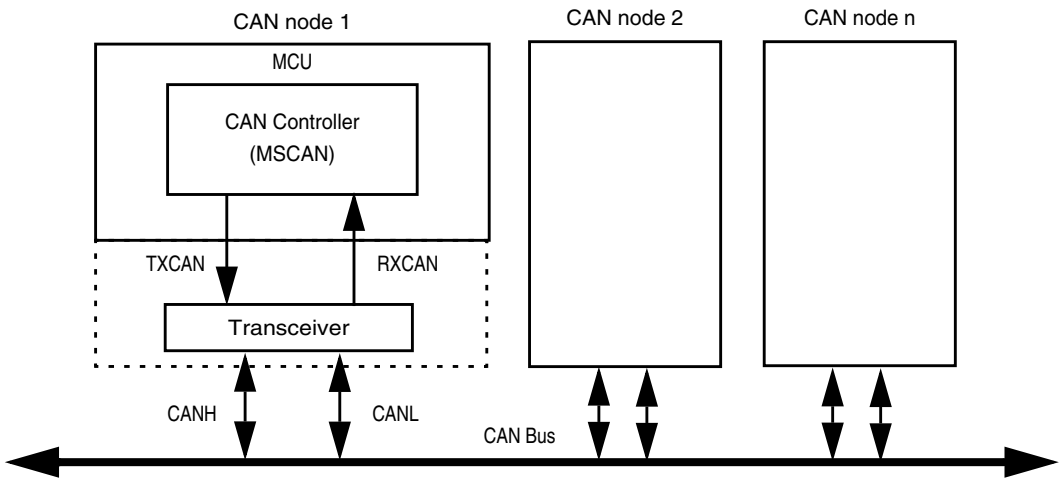

Figure 11-2. CAN System

11.3 Memory Map and Register Definition

This section provides a detailed description of all registers accessible in the MSCAN.

11.3.1 Module Memory Map

Figure 11-3 gives an overview on all registers and their individual bits in the MSCAN memory map. The *register address* results from the addition of *base address* and *address offset*. The *base address* is determined at the MCU level and can be found in the MCU memory map description. The *address offset* is defined at the module level.

The MSCAN occupies 64 bytes in the memory space. The base address of the MSCAN module is determined at the MCU level when the MCU is defined. The register decode map is fixed and begins at the first address of the module address offset.

The detailed register descriptions follow in the order they appear in the register map.

Register Name		Bit 7	6	5	4	3	2	1	Bit 0
0x0000 CANCTL0	R	RXFRM	RXACT	CSWAI	SYNCH	TIME	WUPE	SLPRQ	INITRQ
	W								
0x0001 CANCTL1	R	CANE	CLKSRC	LOOPB	LISTEN	BORM	WUPM	SLPAK	INITAK
	W								
0x0002 CANBTR0	R	SJW1	SJW0	BRP5	BRP4	BRP3	BRP2	BRP1	BRP0
	W								
0x0003 CANBTR1	R	SAMP	TSEG22	TSEG21	TSEG20	TSEG13	TSEG12	TSEG11	TSEG10
	W								
0x0004 CANRFLG	R	WUPIF	CSCIF	RSTAT1	RSTAT0	TSTAT1	TSTAT0	OVRIF	RXF
	W								
0x0005 CANRIER	R	WUPIE	CSCIE	RSTATE1	RSTATE0	TSTATE1	TSTATE0	OVRIE	RXFIE
	W								
0x0006 CANTFLG	R	0	0	0	0	0	TXE2	TXE1	TXE0
	W								
0x0007 CANTIER	R	0	0	0	0	0	TXEIE2	TXEIE1	TXEIE0
	W								
0x0008 CANTARQ	R	0	0	0	0	0	ABTRQ2	ABTRQ1	ABTRQ0
	W								
0x0009 CANTAAK	R	0	0	0	0	0	ABTAK2	ABTAK1	ABTAK0
	W								
0x000A CANTBSEL	R	0	0	0	0	0	TX2	TX1	TX0
	W								
0x000B CANIDAC	R	0	0	IDAM1	IDAM0	0	IDHIT2	IDHIT1	IDHIT0
	W								
0x000C Reserved	R	0	0	0	0	0	0	0	0
	W								
0x000D CANMISC	R	0	0	0	0	0	0	0	BOHOLD
	W								
0x000E CANRXERR	R	RXERR7	RXERR6	RXERR5	RXERR4	RXERR3	RXERR2	RXERR1	RXERR0
	W								

= Unimplemented or Reserved

Figure 11-3. MSCAN Register Summary

Register Name		Bit 7	6	5	4	3	2	1	Bit 0
0x000F CANTXERR	R	TXERR7	TXERR6	TXERR5	TXERR4	TXERR3	TXERR2	TXERR1	TXERR0
	W								
0x0010–0x0013 CANIDAR0–3	R/W	AC7	AC6	AC5	AC4	AC3	AC2	AC1	AC0
0x0014–0x0017 CANIDMRx	R/W	AM7	AM6	AM5	AM4	AM3	AM2	AM1	AM0
0x0018–0x001B CANIDAR4–7	R/W	AC7	AC6	AC5	AC4	AC3	AC2	AC1	AC0
0x001C–0x001F CANIDMR4–7	R/W	AM7	AM6	AM5	AM4	AM3	AM2	AM1	AM0
0x0020–0x002F CANRXFG	R/W	See Section 11.3.3, "Programmer's Model of Message Storage"							
0x0030–0x003F CANTXFG	R/W	See Section 11.3.3, "Programmer's Model of Message Storage"							

= Unimplemented or Reserved

Figure 11-3. MSCAN Register Summary (continued)

11.3.2 Register Descriptions

This section describes in detail all the registers and register bits in the MSCAN module. Each description includes a standard register diagram with an associated figure number. Details of register bit and field function follow the register diagrams, in bit order. All bits of all registers in this module are completely synchronous to internal clocks during a register read.

11.3.2.1 MSCAN Control Register 0 (CANCTL0)

The CANCTL0 register provides various control bits of the MSCAN module as described below.

Module Base + 0x0000 Access: User read/write(1)

	7	6	5	4	3	2	1	0
R	RXFRM	RXACT	CSWAI	SYNCH	TIME	WUPE	SLPRQ	INITRQ
W								
Reset:	0	0	0	0	0	0	0	1

= Unimplemented

Figure 11-4. MSCAN Control Register 0 (CANCTL0)

1. Read: Anytime
   Write: Anytime when out of initialization mode; exceptions are read-only RXACT and SYNCH, RXFRM (which is set by the module only), and INITRQ (which is also writable in initialization mode)

NOTE

The CANCTL0 register, except WUPE, INITRQ, and SLPRQ, is held in the reset state when the initialization mode is active (INITRQ = 1 and INITAK = 1). This register is writable again as soon as the initialization mode is exited (INITRQ = 0 and INITAK = 0).

Table 11-3. CANCTL0 Register Field Descriptions

Field	Description
7 RXFRM	**Received Frame Flag** — This bit is read and clear only. It is set when a receiver has received a valid message correctly, independently of the filter configuration. After it is set, it remains set until cleared by software or reset. Clearing is done by writing a 1. Writing a 0 is ignored. This bit is not valid in loopback mode. 0 No valid message was received since last clearing this flag 1 A valid message was received since last clearing of this flag
6 RXACT	**Receiver Active Status** — This read-only flag indicates the MSCAN is receiving a message(1). The flag is controlled by the receiver front end. This bit is not valid in loopback mode. 0 MSCAN is transmitting or idle 1 MSCAN is receiving a message (including when arbitration is lost)
5 CSWAI(2)	**CAN Stops in Wait Mode** — Enabling this bit allows for lower power consumption in wait mode by disabling all the clocks at the CPU bus interface to the MSCAN module. 0 The module is not affected during wait mode 1 The module ceases to be clocked during wait mode
4 SYNCH	**Synchronized Status** — This read-only flag indicates whether the MSCAN is synchronized to the CAN bus and able to participate in the communication process. It is set and cleared by the MSCAN. 0 MSCAN is not synchronized to the CAN bus 1 MSCAN is synchronized to the CAN bus
3 TIME	**Timer Enable** — This bit activates an internal 16-bit wide free running timer which is clocked by the bit clock rate. If the timer is enabled, a 16-bit time stamp will be assigned to each transmitted/received message within the active TX/RX buffer. Right after the EOF of a valid message on the CAN bus, the time stamp is written to the highest bytes (0x000E, 0x000F) in the appropriate buffer (see Section 11.3.3, "Programmer's Model of Message Storage"). The internal timer is reset (all bits set to 0) when disabled. This bit is held low in initialization mode. 0 Disable internal MSCAN timer 1 Enable internal MSCAN timer
2 WUPE(3)	**Wake-Up Enable** — This configuration bit allows the MSCAN to restart from sleep mode or from power down mode (entered from sleep) when traffic on CAN is detected (see Section 11.4.5.5, "MSCAN Sleep Mode"). This bit must be configured before sleep mode entry for the selected function to take effect. 0 Wake-up disabled — The MSCAN ignores traffic on CAN 1 Wake-up enabled — The MSCAN is able to restart

Table 11-3. CANCTL0 Register Field Descriptions (continued)

Field	Description
1 SLPRQ[4]	**Sleep Mode Request** — This bit requests the MSCAN to enter sleep mode, which is an internal power saving mode (see Section 11.4.5.5, "MSCAN Sleep Mode"). The sleep mode request is serviced when the CAN bus is idle, i.e., the module is not receiving a message and all transmit buffers are empty. The module indicates entry to sleep mode by setting SLPAK = 1 (see Section 11.3.2.2, "MSCAN Control Register 1 (CANCTL1)"). SLPRQ cannot be set while the WUPIF flag is set (see Section 11.3.2.5, "MSCAN Receiver Flag Register (CANRFLG)"). Sleep mode will be active until SLPRQ is cleared by the CPU or, depending on the setting of WUPE, the MSCAN detects activity on the CAN bus and clears SLPRQ itself. 0 Running — The MSCAN functions normally 1 Sleep mode request — The MSCAN enters sleep mode when CAN bus idle
0 INITRQ[5],[6]	**Initialization Mode Request** — When this bit is set by the CPU, the MSCAN skips to initialization mode (see Section 11.4.4.5, "MSCAN Initialization Mode"). Any ongoing transmission or reception is aborted and synchronization to the CAN bus is lost. The module indicates entry to initialization mode by setting INITAK = 1 (Section 11.3.2.2, "MSCAN Control Register 1 (CANCTL1)"). The following registers enter their hard reset state and restore their default values: CANCTL0[7], CANRFLG[8], CANRIER[9], CANTFLG, CANTIER, CANTARQ, CANTAAK, and CANTBSEL. The registers CANCTL1, CANBTR0, CANBTR1, CANIDAC, CANIDAR0-7, and CANIDMR0-7 can only be written by the CPU when the MSCAN is in initialization mode (INITRQ = 1 and INITAK = 1). The values of the error counters are not affected by initialization mode. When this bit is cleared by the CPU, the MSCAN restarts and then tries to synchronize to the CAN bus. If the MSCAN is not in bus-off state, it synchronizes after 11 consecutive recessive bits on the CAN bus; if the MSCAN is in bus-off state, it continues to wait for 128 occurrences of 11 consecutive recessive bits. Writing to other bits in CANCTL0, CANRFLG, CANRIER, CANTFLG, or CANTIER must be done only after initialization mode is exited, which is INITRQ = 0 and INITAK = 0. 0 Normal operation 1 MSCAN in initialization mode

1. See the Bosch CAN 2.0A/B specification for a detailed definition of transmitter and receiver states.
2. In order to protect from accidentally violating the CAN protocol, TXCAN is immediately forced to a recessive state when the CPU enters wait (CSWAI = 1) or stop mode (see Section 11.4.5.2, "Operation in Wait Mode" and Section 11.4.5.3, "Operation in Stop Mode")**.**
3. The CPU has to make sure that the WUPE register and the WUPIE wake-up interrupt enable register (see Section 11.3.2.6, "MSCAN Receiver Interrupt Enable Register (CANRIER)) is enabled, if the recovery mechanism from stop or wait is required.
4. The CPU cannot clear SLPRQ before the MSCAN has entered sleep mode (SLPRQ = 1 and SLPAK = 1).
5. The CPU cannot clear INITRQ before the MSCAN has entered initialization mode (INITRQ = 1 and INITAK = 1).
6. In order to protect from accidentally violating the CAN protocol, TXCAN is immediately forced to a recessive state when the initialization mode is requested by the CPU. Thus, the recommended procedure is to bring the MSCAN into sleep mode (SLPRQ = 1 and SLPAK = 1) before requesting initialization mode.
7. Not including WUPE, INITRQ, and SLPRQ.
8. TSTAT1 and TSTAT0 are not affected by initialization mode.
9. RSTAT1 and RSTAT0 are not affected by initialization mode.

11.3.2.2 MSCAN Control Register 1 (CANCTL1)

The CANCTL1 register provides various control bits and handshake status information of the MSCAN module as described below.

Module Base + 0x0001 Access: User read/write[1]

	7	6	5	4	3	2	1	0
R	CANE	CLKSRC	LOOPB	LISTEN	BORM	WUPM	SLPAK	INITAK
W								
Reset:	0	0	0	1	0	0	0	1

= Unimplemented

Figure 11-5. MSCAN Control Register 1 (CANCTL1)

1. Read: Anytime
   Write: Anytime in initialization mode (INITRQ = 1 and INITAK = 1), except CANE which is write once in normal and anytime in special system operation modes when the MSCAN is in initialization mode (INITRQ = 1 and INITAK = 1)

Table 11-4. CANCTL1 Register Field Descriptions

Field	Description
7 CANE	**MSCAN Enable** 0 MSCAN module is disabled 1 MSCAN module is enabled
6 CLKSRC	**MSCAN Clock Source** — This bit defines the clock source for the MSCAN module (only for systems with a clock generation module; Section 11.4.3.2, "Clock System," and Section Figure 11-43., "MSCAN Clocking Scheme,"). 0 MSCAN clock source is the oscillator clock 1 MSCAN clock source is the bus clock
5 LOOPB	**Loopback Self Test Mode** — When this bit is set, the MSCAN performs an internal loopback which can be used for self test operation. The bit stream output of the transmitter is fed back to the receiver internally. The RXCAN input is ignored and the TXCAN output goes to the recessive state (logic 1). The MSCAN behaves as it does normally when transmitting and treats its own transmitted message as a message received from a remote node. In this state, the MSCAN ignores the bit sent during the ACK slot in the CAN frame acknowledge field to ensure proper reception of its own message. Both transmit and receive interrupts are generated. 0 Loopback self test disabled 1 Loopback self test enabled
4 LISTEN	**Listen Only Mode** — This bit configures the MSCAN as a CAN bus monitor. When LISTEN is set, all valid CAN messages with matching ID are received, but no acknowledgement or error frames are sent out (see Section 11.4.4.4, "Listen-Only Mode"). In addition, the error counters are frozen. Listen only mode supports applications which require "hot plugging" or throughput analysis. The MSCAN is unable to transmit any messages when listen only mode is active. 0 Normal operation 1 Listen only mode activated
3 BORM	**Bus-Off Recovery Mode** — This bit configures the bus-off state recovery mode of the MSCAN. Refer to Section 11.5.2, "Bus-Off Recovery," for details. 0 Automatic bus-off recovery (see Bosch CAN 2.0A/B protocol specification) 1 Bus-off recovery upon user request
2 WUPM	**Wake-Up Mode** — If WUPE in CANCTL0 is enabled, this bit defines whether the integrated low-pass filter is applied to protect the MSCAN from spurious wake-up (see Section 11.4.5.5, "MSCAN Sleep Mode"). 0 MSCAN wakes up on any dominant level on the CAN bus 1 MSCAN wakes up only in case of a dominant pulse on the CAN bus that has a length of T_{wup}

Table 11-4. CANCTL1 Register Field Descriptions (continued)

Field	Description
1 SLPAK	**Sleep Mode Acknowledge** — This flag indicates whether the MSCAN module has entered sleep mode (see Section 11.4.5.5, "MSCAN Sleep Mode"). It is used as a handshake flag for the SLPRQ sleep mode request. Sleep mode is active when SLPRQ = 1 and SLPAK = 1. Depending on the setting of WUPE, the MSCAN will clear the flag if it detects activity on the CAN bus while in sleep mode. 0 Running — The MSCAN operates normally 1 Sleep mode active — The MSCAN has entered sleep mode
0 INITAK	**Initialization Mode Acknowledge** — This flag indicates whether the MSCAN module is in initialization mode (see Section 11.4.4.5, "MSCAN Initialization Mode"). It is used as a handshake flag for the INITRQ initialization mode request. Initialization mode is active when INITRQ = 1 and INITAK = 1. The registers CANCTL1, CANBTR0, CANBTR1, CANIDAC, CANIDAR0–CANIDAR7, and CANIDMR0–CANIDMR7 can be written only by the CPU when the MSCAN is in initialization mode. 0 Running — The MSCAN operates normally 1 Initialization mode active — The MSCAN has entered initialization mode

11.3.2.3 MSCAN Bus Timing Register 0 (CANBTR0)

The CANBTR0 register configures various CAN bus timing parameters of the MSCAN module.

Module Base + 0x0002 Access: User read/write[1]

	7	6	5	4	3	2	1	0
R W	SJW1	SJW0	BRP5	BRP4	BRP3	BRP2	BRP1	BRP0
Reset:	0	0	0	0	0	0	0	0

Figure 11-6. MSCAN Bus Timing Register 0 (CANBTR0)

1. Read: Anytime
   Write: Anytime in initialization mode (INITRQ = 1 and INITAK = 1)

Table 11-5. CANBTR0 Register Field Descriptions

Field	Description
7-6 SJW[1:0]	**Synchronization Jump Width** — The synchronization jump width defines the maximum number of time quanta (Tq) clock cycles a bit can be shortened or lengthened to achieve resynchronization to data transitions on the CAN bus (see Table 11-6).
5-0 BRP[5:0]	**Baud Rate Prescaler** — These bits determine the time quanta (Tq) clock which is used to build up the bit timing (see Table 11-7).

Table 11-6. Synchronization Jump Width

SJW1	SJW0	Synchronization Jump Width
0	0	1 Tq clock cycle
0	1	2 Tq clock cycles
1	0	3 Tq clock cycles
1	1	4 Tq clock cycles

Table 11-7. Baud Rate Prescaler

BRP5	BRP4	BRP3	BRP2	BRP1	BRP0	Prescaler value (P)
0	0	0	0	0	0	1
0	0	0	0	0	1	2
0	0	0	0	1	0	3
0	0	0	0	1	1	4
:	:	:	:	:	:	:
1	1	1	1	1	1	64

11.3.2.4 MSCAN Bus Timing Register 1 (CANBTR1)

The CANBTR1 register configures various CAN bus timing parameters of the MSCAN module.

Module Base + 0x0003 Access: User read/write[1]

	7	6	5	4	3	2	1	0
R/W	SAMP	TSEG22	TSEG21	TSEG20	TSEG13	TSEG12	TSEG11	TSEG10
Reset:	0	0	0	0	0	0	0	0

Figure 11-7. MSCAN Bus Timing Register 1 (CANBTR1)

1. Read: Anytime
   Write: Anytime in initialization mode (INITRQ = 1 and INITAK = 1)

Table 11-8. CANBTR1 Register Field Descriptions

Field	Description
7 SAMP	**Sampling** — This bit determines the number of CAN bus samples taken per bit time. 0 One sample per bit. 1 Three samples per bit[1]. If SAMP = 0, the resulting bit value is equal to the value of the single bit positioned at the sample point. If SAMP = 1, the resulting bit value is determined by using majority rule on the three total samples. For higher bit rates, it is recommended that only one sample is taken per bit time (SAMP = 0).
6-4 TSEG2[2:0]	**Time Segment 2** — Time segments within the bit time fix the number of clock cycles per bit time and the location of the sample point (see Figure 11-44). Time segment 2 (TSEG2) values are programmable as shown in Table 11-9.
3-0 TSEG1[3:0]	**Time Segment 1** — Time segments within the bit time fix the number of clock cycles per bit time and the location of the sample point (see Figure 11-44). Time segment 1 (TSEG1) values are programmable as shown in Table 11-10.

1. In this case, PHASE_SEG1 must be at least 2 time quanta (Tq).

Table 11-9. Time Segment 2 Values

TSEG22	TSEG21	TSEG20	Time Segment 2
0	0	0	1 Tq clock cycle[1]
0	0	1	2 Tq clock cycles
:	:	:	:
1	1	0	7 Tq clock cycles
1	1	1	8 Tq clock cycles

1. This setting is not valid. Please refer to Table 11-37 for valid settings.

Table 11-10. Time Segment 1 Values

TSEG13	TSEG12	TSEG11	TSEG10	Time segment 1
0	0	0	0	1 Tq clock cycle[1]
0	0	0	1	2 Tq clock cycles[1]
0	0	1	0	3 Tq clock cycles[1]
0	0	1	1	4 Tq clock cycles
:	:	:	:	:
1	1	1	0	15 Tq clock cycles
1	1	1	1	16 Tq clock cycles

1. This setting is not valid. Please refer to Table 11-37 for valid settings.

The bit time is determined by the oscillator frequency, the baud rate prescaler, and the number of time quanta (Tq) clock cycles per bit (as shown in Table 11-9 and Table 11-10).

Eqn. 11-1

$$\text{Bit Time} = \frac{(\text{Prescaler value})}{f_{CANCLK}} \bullet (1 + \text{TimeSegment1} + \text{TimeSegment2})$$

11.3.2.5 MSCAN Receiver Flag Register (CANRFLG)

A flag can be cleared only by software (writing a 1 to the corresponding bit position) when the condition which caused the setting is no longer valid. Every flag has an associated interrupt enable bit in the CANRIER register.

Module Base + 0x0004 — Access: User read/write[1]

	7	6	5	4	3	2	1	0
R	WUPIF	CSCIF	RSTAT1	RSTAT0	TSTAT1	TSTAT0	OVRIF	RXF
W								
Reset:	0	0	0	0	0	0	0	0

= Unimplemented

Figure 11-8. MSCAN Receiver Flag Register (CANRFLG)

1. Read: Anytime
   Write: Anytime when not in initialization mode, except RSTAT[1:0] and TSTAT[1:0] flags which are read-only; write of 1 clears flag; write of 0 is ignored

NOTE

The CANRFLG register is held in the reset state[1] when the initialization mode is active (INITRQ = 1 and INITAK = 1). This register is writable again as soon as the initialization mode is exited (INITRQ = 0 and INITAK = 0).

Table 11-11. CANRFLG Register Field Descriptions

Field	Description
7 WUPIF	**Wake-Up Interrupt Flag** — If the MSCAN detects CAN bus activity while in sleep mode (see Section 11.4.5.5, "MSCAN Sleep Mode,") and WUPE = 1 in CANTCTL0 (see Section 11.3.2.1, "MSCAN Control Register 0 (CANCTL0)"), the module will set WUPIF. If not masked, a wake-up interrupt is pending while this flag is set. 0 No wake-up activity observed while in sleep mode 1 MSCAN detected activity on the CAN bus and requested wake-up
6 CSCIF	**CAN Status Change Interrupt Flag** — This flag is set when the MSCAN changes its current CAN bus status due to the actual value of the transmit error counter (TEC) and the receive error counter (REC). An additional 4-bit (RSTAT[1:0], TSTAT[1:0]) status register, which is split into separate sections for TEC/REC, informs the system on the actual CAN bus status (see Section 11.3.2.6, "MSCAN Receiver Interrupt Enable Register (CANRIER)"). If not masked, an error interrupt is pending while this flag is set. CSCIF provides a blocking interrupt. That guarantees that the receiver/transmitter status bits (RSTAT/TSTAT) are only updated when no CAN status change interrupt is pending. If the TECs/RECs change their current value after the CSCIF is asserted, which would cause an additional state change in the RSTAT/TSTAT bits, these bits keep their status until the current CSCIF interrupt is cleared again. 0 No change in CAN bus status occurred since last interrupt 1 MSCAN changed current CAN bus status
5-4 RSTAT[1:0]	**Receiver Status Bits** — The values of the error counters control the actual CAN bus status of the MSCAN. As soon as the status change interrupt flag (CSCIF) is set, these bits indicate the appropriate receiver related CAN bus status of the MSCAN. The coding for the bits RSTAT1, RSTAT0 is: 00 RxOK: 0 ≤ receive error counter ≤ 96 01 RxWRN: 96 < receive error counter ≤ 127 10 RxERR: 127 < receive error counter 11 Bus-off[(1)]: transmit error counter > 255
3-2 TSTAT[1:0]	**Transmitter Status Bits** — The values of the error counters control the actual CAN bus status of the MSCAN. As soon as the status change interrupt flag (CSCIF) is set, these bits indicate the appropriate transmitter related CAN bus status of the MSCAN. The coding for the bits TSTAT1, TSTAT0 is: 00 TxOK: 0 ≤ transmit error counter ≤ 96 01 TxWRN: 96 < transmit error counter ≤ 127 10 TxERR: 127 < transmit error counter ≤ 255 11 Bus-Off: transmit error counter > 255

1. The RSTAT[1:0], TSTAT[1:0] bits are not affected by initialization mode.

Table 11-11. CANRFLG Register Field Descriptions (continued)

Field	Description
1 OVRIF	**Overrun Interrupt Flag** — This flag is set when a data overrun condition occurs. If not masked, an error interrupt is pending while this flag is set. 0 No data overrun condition 1 A data overrun detected
0 RXF[2]	**Receive Buffer Full Flag** — RXF is set by the MSCAN when a new message is shifted in the receiver FIFO. This flag indicates whether the shifted buffer is loaded with a correctly received message (matching identifier, matching cyclic redundancy code (CRC) and no other errors detected). After the CPU has read that message from the RxFG buffer in the receiver FIFO, the RXF flag must be cleared to release the buffer. A set RXF flag prohibits the shifting of the next FIFO entry into the foreground buffer (RxFG). If not masked, a receive interrupt is pending while this flag is set. 0 No new message available within the RxFG 1 The receiver FIFO is not empty. A new message is available in the RxFG

1. Redundant Information for the most critical CAN bus status which is "bus-off". This only occurs if the Tx error counter exceeds a number of 255 errors. Bus-off affects the receiver state. As soon as the transmitter leaves its bus-off state the receiver state skips to RxOK too. Refer also to TSTAT[1:0] coding in this register.
2. To ensure data integrity, do not read the receive buffer registers while the RXF flag is cleared. For MCUs with dual CPUs, reading the receive buffer registers while the RXF flag is cleared may result in a CPU fault condition.

11.3.2.6 MSCAN Receiver Interrupt Enable Register (CANRIER)

This register contains the interrupt enable bits for the interrupt flags described in the CANRFLG register.

Module Base + 0x0005 Access: User read/write[1]

	7	6	5	4	3	2	1	0
R W	WUPIE	CSCIE	RSTATE1	RSTATE0	TSTATE1	TSTATE0	OVRIE	RXFIE
Reset:	0	0	0	0	0	0	0	0

Figure 11-9. MSCAN Receiver Interrupt Enable Register (CANRIER)

1. Read: Anytime
   Write: Anytime when not in initialization mode

NOTE

The CANRIER register is held in the reset state when the initialization mode is active (INITRQ=1 and INITAK=1). This register is writable when not in initialization mode (INITRQ=0 and INITAK=0).

The RSTATE[1:0], TSTATE[1:0] bits are not affected by initialization mode.

Table 11-12. CANRIER Register Field Descriptions

Field	Description
7 WUPIE[1]	**Wake-Up Interrupt Enable** 0 No interrupt request is generated from this event. 1 A wake-up event causes a Wake-Up interrupt request.
6 CSCIE	**CAN Status Change Interrupt Enable** 0 No interrupt request is generated from this event. 1 A CAN Status Change event causes an error interrupt request.
5-4 RSTATE[1:0]	**Receiver Status Change Enable** — These RSTAT enable bits control the sensitivity level in which receiver state changes are causing CSCIF interrupts. Independent of the chosen sensitivity level the RSTAT flags continue to indicate the actual receiver state and are only updated if no CSCIF interrupt is pending. 00 Do not generate any CSCIF interrupt caused by receiver state changes. 01 Generate CSCIF interrupt only if the receiver enters or leaves "bus-off" state. Discard other receiver state changes for generating CSCIF interrupt. 10 Generate CSCIF interrupt only if the receiver enters or leaves "RxErr" or "bus-off"[2] state. Discard other receiver state changes for generating CSCIF interrupt. 11 Generate CSCIF interrupt on all state changes.
3-2 TSTATE[1:0]	**Transmitter Status Change Enable** — These TSTAT enable bits control the sensitivity level in which transmitter state changes are causing CSCIF interrupts. Independent of the chosen sensitivity level, the TSTAT flags continue to indicate the actual transmitter state and are only updated if no CSCIF interrupt is pending. 00 Do not generate any CSCIF interrupt caused by transmitter state changes. 01 Generate CSCIF interrupt only if the transmitter enters or leaves "bus-off" state. Discard other transmitter state changes for generating CSCIF interrupt. 10 Generate CSCIF interrupt only if the transmitter enters or leaves "TxErr" or "bus-off" state. Discard other transmitter state changes for generating CSCIF interrupt. 11 Generate CSCIF interrupt on all state changes.
1 OVRIE	**Overrun Interrupt Enable** 0 No interrupt request is generated from this event. 1 An overrun event causes an error interrupt request.
0 RXFIE	**Receiver Full Interrupt Enable** 0 No interrupt request is generated from this event. 1 A receive buffer full (successful message reception) event causes a receiver interrupt request.

1. WUPIE and WUPE (see Section 11.3.2.1, "MSCAN Control Register 0 (CANCTL0)") must both be enabled if the recovery mechanism from stop or wait is required.
2. Bus-off state is only defined for transmitters by the CAN standard (see Bosch CAN 2.0A/B protocol specification). Because the only possible state change for the transmitter from bus-off to TxOK also forces the receiver to skip its current state to RxOK, the coding of the RXSTAT[1:0] flags define an additional bus-off state for the receiver (see Section 11.3.2.5, "MSCAN Receiver Flag Register (CANRFLG)").

11.3.2.7 MSCAN Transmitter Flag Register (CANTFLG)

The transmit buffer empty flags each have an associated interrupt enable bit in the CANTIER register.

Module Base + 0x0006 Access: User read/write[1]

	7	6	5	4	3	2	1	0
R	0	0	0	0	0	TXE2	TXE1	TXE0
W								
Reset:	0	0	0	0	0	1	1	1

= Unimplemented

Figure 11-10. MSCAN Transmitter Flag Register (CANTFLG)

1. Read: Anytime
   Write: Anytime when not in initialization mode; write of 1 clears flag, write of 0 is ignored

NOTE

The CANTFLG register is held in the reset state when the initialization mode is active (INITRQ = 1 and INITAK = 1). This register is writable when not in initialization mode (INITRQ = 0 and INITAK = 0).

Table 11-13. CANTFLG Register Field Descriptions

Field	Description
2-0 TXE[2:0]	**Transmitter Buffer Empty** — This flag indicates that the associated transmit message buffer is empty, and thus not scheduled for transmission. The CPU must clear the flag after a message is set up in the transmit buffer and is due for transmission. The MSCAN sets the flag after the message is sent successfully. The flag is also set by the MSCAN when the transmission request is successfully aborted due to a pending abort request (see Section 11.3.2.9, "MSCAN Transmitter Message Abort Request Register (CANTARQ)"). If not masked, a transmit interrupt is pending while this flag is set. Clearing a TXEx flag also clears the corresponding ABTAKx (see Section 11.3.2.10, "MSCAN Transmitter Message Abort Acknowledge Register (CANTAAK)"). When a TXEx flag is set, the corresponding ABTRQx bit is cleared (see Section 11.3.2.9, "MSCAN Transmitter Message Abort Request Register (CANTARQ)"). When listen-mode is active (see Section 11.3.2.2, "MSCAN Control Register 1 (CANCTL1)") the TXEx flags cannot be cleared and no transmission is started. Read and write accesses to the transmit buffer will be blocked, if the corresponding TXEx bit is cleared (TXEx = 0) and the buffer is scheduled for transmission. 0 The associated message buffer is full (loaded with a message due for transmission) 1 The associated message buffer is empty (not scheduled)

11.3.2.8 MSCAN Transmitter Interrupt Enable Register (CANTIER)

This register contains the interrupt enable bits for the transmit buffer empty interrupt flags.

Module Base + 0x0007 Access: User read/write[1]

	7	6	5	4	3	2	1	0
R	0	0	0	0	0	TXEIE2	TXEIE1	TXEIE0
W								
Reset:	0	0	0	0	0	0	0	0

= Unimplemented

Figure 11-11. MSCAN Transmitter Interrupt Enable Register (CANTIER)

1. Read: Anytime
   Write: Anytime when not in initialization mode

NOTE

The CANTIER register is held in the reset state when the initialization mode is active (INITRQ = 1 and INITAK = 1). This register is writable when not in initialization mode (INITRQ = 0 and INITAK = 0).

Table 11-14. CANTIER Register Field Descriptions

Field	Description
2-0 TXEIE[2:0]	**Transmitter Empty Interrupt Enable** 0 No interrupt request is generated from this event. 1 A transmitter empty (transmit buffer available for transmission) event causes a transmitter empty interrupt request.

11.3.2.9 MSCAN Transmitter Message Abort Request Register (CANTARQ)

The CANTARQ register allows abort request of queued messages as described below.

Module Base + 0x0008 Access: User read/write[1]

	7	6	5	4	3	2	1	0
R	0	0	0	0	0	ABTRQ2	ABTRQ1	ABTRQ0
W								
Reset:	0	0	0	0	0	0	0	0

= Unimplemented

Figure 11-12. MSCAN Transmitter Message Abort Request Register (CANTARQ)

1. Read: Anytime
   Write: Anytime when not in initialization mode

NOTE

The CANTARQ register is held in the reset state when the initialization mode is active (INITRQ = 1 and INITAK = 1). This register is writable when not in initialization mode (INITRQ = 0 and INITAK = 0).

Table 11-15. CANTARQ Register Field Descriptions

Field	Description
2-0 ABTRQ[2:0]	**Abort Request** — The CPU sets the ABTRQx bit to request that a scheduled message buffer (TXEx = 0) be aborted. The MSCAN grants the request if the message has not already started transmission, or if the transmission is not successful (lost arbitration or error). When a message is aborted, the associated TXE (see Section 11.3.2.7, "MSCAN Transmitter Flag Register (CANTFLG)") and abort acknowledge flags (ABTAK, see Section 11.3.2.10, "MSCAN Transmitter Message Abort Acknowledge Register (CANTAAK)") are set and a transmit interrupt occurs if enabled. The CPU cannot reset ABTRQx. ABTRQx is reset whenever the associated TXE flag is set. 0 No abort request 1 Abort request pending

11.3.2.10 MSCAN Transmitter Message Abort Acknowledge Register (CANTAAK)

The CANTAAK register indicates the successful abort of a queued message, if requested by the appropriate bits in the CANTARQ register.

Module Base + 0x0009 Access: User read/write(1)

	7	6	5	4	3	2	1	0
R	0	0	0	0	0	ABTAK2	ABTAK1	ABTAK0
W								
Reset:	0	0	0	0	0	0	0	0

= Unimplemented

Figure 11-13. MSCAN Transmitter Message Abort Acknowledge Register (CANTAAK)

1. Read: Anytime
   Write: Unimplemented

NOTE

The CANTAAK register is held in the reset state when the initialization mode is active (INITRQ = 1 and INITAK = 1).

Table 11-16. CANTAAK Register Field Descriptions

Field	Description
2-0 ABTAK[2:0]	**Abort Acknowledge** — This flag acknowledges that a message was aborted due to a pending abort request from the CPU. After a particular message buffer is flagged empty, this flag can be used by the application software to identify whether the message was aborted successfully or was sent anyway. The ABTAKx flag is cleared whenever the corresponding TXE flag is cleared. 0 The message was not aborted. 1 The message was aborted.

11.3.2.11 MSCAN Transmit Buffer Selection Register (CANTBSEL)

The CANTBSEL register allows the selection of the actual transmit message buffer, which then will be accessible in the CANTXFG register space.

Module Base + 0x000A Access: User read/write(1)

	7	6	5	4	3	2	1	0
R	0	0	0	0	0	TX2	TX1	TX0
W								
Reset:	0	0	0	0	0	0	0	0

= Unimplemented

Figure 11-14. MSCAN Transmit Buffer Selection Register (CANTBSEL)

1. Read: Find the lowest ordered bit set to 1, all other bits will be read as 0
   Write: Anytime when not in initialization mode

NOTE

The CANTBSEL register is held in the reset state when the initialization mode is active (INITRQ = 1 and INITAK=1). This register is writable when not in initialization mode (INITRQ = 0 and INITAK = 0).

Table 11-17. CANTBSEL Register Field Descriptions

Field	Description
2-0 TX[2:0]	**Transmit Buffer Select** — The lowest numbered bit places the respective transmit buffer in the CANTXFG register space (e.g., TX1 = 1 and TX0 = 1 selects transmit buffer TX0; TX1 = 1 and TX0 = 0 selects transmit buffer TX1). Read and write accesses to the selected transmit buffer will be blocked, if the corresponding TXEx bit is cleared and the buffer is scheduled for transmission (see Section 11.3.2.7, "MSCAN Transmitter Flag Register (CANTFLG)"). 0 The associated message buffer is deselected 1 The associated message buffer is selected, if lowest numbered bit

The following gives a short programming example of the usage of the CANTBSEL register:

To get the next available transmit buffer, application software must read the CANTFLG register and write this value back into the CANTBSEL register. In this example Tx buffers TX1 and TX2 are available. The value read from CANTFLG is therefore 0b0000_0110. When writing this value back to CANTBSEL, the Tx buffer TX1 is selected in the CANTXFG because the lowest numbered bit set to 1 is at bit position 1. Reading back this value out of CANTBSEL results in 0b0000_0010, because only the lowest numbered bit position set to 1 is presented. This mechanism eases the application software's selection of the next available Tx buffer.

- LDAA CANTFLG; value read is 0b0000_0110
- STAA CANTBSEL; value written is 0b0000_0110
- LDAA CANTBSEL; value read is 0b0000_0010

If all transmit message buffers are deselected, no accesses are allowed to the CANTXFG registers.

11.3.2.12 MSCAN Identifier Acceptance Control Register (CANIDAC)

The CANIDAC register is used for identifier acceptance control as described below.

Module Base + 0x000B — Access: User read/write[1]

	7	6	5	4	3	2	1	0
R	0	0	IDAM1	IDAM0	0	IDHIT2	IDHIT1	IDHIT0
W								
Reset:	0	0	0	0	0	0	0	0

= Unimplemented

Figure 11-15. MSCAN Identifier Acceptance Control Register (CANIDAC)

1. Read: Anytime
   Write: Anytime in initialization mode (INITRQ = 1 and INITAK = 1), except bits IDHITx, which are read-only

Table 11-18. CANIDAC Register Field Descriptions

Field	Description
5-4 IDAM[1:0]	**Identifier Acceptance Mode** — The CPU sets these flags to define the identifier acceptance filter organization (see Section 11.4.3, "Identifier Acceptance Filter"). Table 11-19 summarizes the different settings. In filter closed mode, no message is accepted such that the foreground buffer is never reloaded.
2-0 IDHIT[2:0]	Identifier Acceptance Hit Indicator — The MSCAN sets these flags to indicate an identifier acceptance hit (see Section 11.4.3, "Identifier Acceptance Filter"). Table 11-20 summarizes the different settings.

Table 11-19. Identifier Acceptance Mode Settings

IDAM1	IDAM0	Identifier Acceptance Mode
0	0	Two 32-bit acceptance filters
0	1	Four 16-bit acceptance filters
1	0	Eight 8-bit acceptance filters
1	1	Filter closed

Table 11-20. Identifier Acceptance Hit Indication

IDHIT2	IDHIT1	IDHIT0	Identifier Acceptance Hit
0	0	0	Filter 0 hit
0	0	1	Filter 1 hit
0	1	0	Filter 2 hit
0	1	1	Filter 3 hit
1	0	0	Filter 4 hit
1	0	1	Filter 5 hit
1	1	0	Filter 6 hit
1	1	1	Filter 7 hit

The IDHITx indicators are always related to the message in the foreground buffer (RxFG). When a message gets shifted into the foreground buffer of the receiver FIFO the indicators are updated as well.

11.3.2.13 MSCAN Reserved Register

This register is reserved for factory testing of the MSCAN module and is not available in normal system operating modes.

Module Base + 0x000C to Module Base + 0x000D — Access: User read/write[1]

	7	6	5	4	3	2	1	0
R	0	0	0	0	0	0	0	0
W								
Reset:	0	0	0	0	0	0	0	0

= Unimplemented

Figure 11-16. MSCAN Reserved Register

1. Read: Always reads zero in normal system operation modes
   Write: Unimplemented in normal system operation modes

NOTE

Writing to this register when in special system operating modes can alter the MSCAN functionality.

11.3.2.14 MSCAN Miscellaneous Register (CANMISC)

This register provides additional features.

Module Base + 0x000D — Access: User read/write[1]

	7	6	5	4	3	2	1	0
R	0	0	0	0	0	0	0	BOHOLD
W								
Reset:	0	0	0	0	0	0	0	0

= Unimplemented

Figure 11-17. MSCAN Miscellaneous Register (CANMISC)

1. Read: Anytime
   Write: Anytime; write of '1' clears flag; write of '0' ignored

Table 11-21. CANMISC Register Field Descriptions

Field	Description
0 BOHOLD	**Bus-off State Hold Until User Request** — If BORM is set in MSCAN Control Register 1 (CANCTL1), this bit indicates whether the module has entered the bus-off state. Clearing this bit requests the recovery from bus-off. Refer to Section 11.5.2, "Bus-Off Recovery," for details. 0 Module is not bus-off or recovery has been requested by user in bus-off state 1 Module is bus-off and holds this state until user request

11.3.2.15 MSCAN Receive Error Counter (CANRXERR)

This register reflects the status of the MSCAN receive error counter.

Module Base + 0x000E — Access: User read/write[1]

	7	6	5	4	3	2	1	0
R	RXERR7	RXERR6	RXERR5	RXERR4	RXERR3	RXERR2	RXERR1	RXERR0
W								
Reset:	0	0	0	0	0	0	0	0

= Unimplemented

Figure 11-18. MSCAN Receive Error Counter (CANRXERR)

1. Read: Only when in sleep mode (SLPRQ = 1 and SLPAK = 1) or initialization mode (INITRQ = 1 and INITAK = 1)
   Write: Unimplemented

NOTE

Reading this register when in any other mode other than sleep or initialization mode may return an incorrect value. For MCUs with dual CPUs, this may result in a CPU fault condition.

Writing to this register when in special modes can alter the MSCAN functionality.

11.3.2.16 MSCAN Transmit Error Counter (CANTXERR)

This register reflects the status of the MSCAN transmit error counter.

Module Base + 0x000F — Access: User read/write[1]

	7	6	5	4	3	2	1	0
R	TXERR7	TXERR6	TXERR5	TXERR4	TXERR3	TXERR2	TXERR1	TXERR0
W								
Reset:	0	0	0	0	0	0	0	0

= Unimplemented

Figure 11-19. MSCAN Transmit Error Counter (CANTXERR)

1. Read: Only when in sleep mode (SLPRQ = 1 and SLPAK = 1) or initialization mode (INITRQ = 1 and INITAK = 1)
   Write: Unimplemented

NOTE

Reading this register when in any other mode other than sleep or initialization mode, may return an incorrect value. For MCUs with dual CPUs, this may result in a CPU fault condition.

Writing to this register when in special modes can alter the MSCAN functionality.

11.3.2.17 MSCAN Identifier Acceptance Registers (CANIDAR0-7)

On reception, each message is written into the background receive buffer. The CPU is only signalled to read the message if it passes the criteria in the identifier acceptance and identifier mask registers (accepted); otherwise, the message is overwritten by the next message (dropped).

The acceptance registers of the MSCAN are applied on the IDR0–IDR3 registers (see Section 11.3.3.1, "Identifier Registers (IDR0–IDR3)") of incoming messages in a bit by bit manner (see Section 11.4.3, "Identifier Acceptance Filter").

For extended identifiers, all four acceptance and mask registers are applied. For standard identifiers, only the first two (CANIDAR0/1, CANIDMR0/1) are applied.

Module Base + 0x0010 to Module Base + 0x0013 — Access: User read/write[1]

	7	6	5	4	3	2	1	0
R/W	AC7	AC6	AC5	AC4	AC3	AC2	AC1	AC0
Reset	0	0	0	0	0	0	0	0

Figure 11-20. MSCAN Identifier Acceptance Registers (First Bank) — CANIDAR0–CANIDAR3

1. Read: Anytime
   Write: Anytime in initialization mode (INITRQ = 1 and INITAK = 1)

Table 11-22. CANIDAR0–CANIDAR3 Register Field Descriptions

Field	Description
7-0 AC[7:0]	**Acceptance Code Bits** — AC[7:0] comprise a user-defined sequence of bits with which the corresponding bits of the related identifier register (IDRn) of the receive message buffer are compared. The result of this comparison is then masked with the corresponding identifier mask register.

Module Base + 0x0018 to Module Base + 0x001B — Access: User read/write[1]

	7	6	5	4	3	2	1	0
R/W	AC7	AC6	AC5	AC4	AC3	AC2	AC1	AC0
Reset	0	0	0	0	0	0	0	0

Figure 11-21. MSCAN Identifier Acceptance Registers (Second Bank) — CANIDAR4–CANIDAR7

1. Read: Anytime
   Write: Anytime in initialization mode (INITRQ = 1 and INITAK = 1)

Table 11-23. CANIDAR4–CANIDAR7 Register Field Descriptions

Field	Description
7-0 AC[7:0]	**Acceptance Code Bits** — AC[7:0] comprise a user-defined sequence of bits with which the corresponding bits of the related identifier register (IDRn) of the receive message buffer are compared. The result of this comparison is then masked with the corresponding identifier mask register.

11.3.2.18 MSCAN Identifier Mask Registers (CANIDMR0–CANIDMR7)

The identifier mask register specifies which of the corresponding bits in the identifier acceptance register are relevant for acceptance filtering. To receive standard identifiers in 32 bit filter mode, it is required to program the last three bits (AM[2:0]) in the mask registers CANIDMR1 and CANIDMR5 to "don't care." To receive standard identifiers in 16 bit filter mode, it is required to program the last three bits (AM[2:0]) in the mask registers CANIDMR1, CANIDMR3, CANIDMR5, and CANIDMR7 to "don't care."

Module Base + 0x0014 to Module Base + 0x0017 — Access: User read/write[1]

	7	6	5	4	3	2	1	0
R W	AM7	AM6	AM5	AM4	AM3	AM2	AM1	AM0
Reset	0	0	0	0	0	0	0	0

Figure 11-22. MSCAN Identifier Mask Registers (First Bank) — CANIDMR0–CANIDMR3

1. Read: Anytime
   Write: Anytime in initialization mode (INITRQ = 1 and INITAK = 1)

Table 11-24. CANIDMR0–CANIDMR3 Register Field Descriptions

Field	Description
7-0 AM[7:0]	**Acceptance Mask Bits** — If a particular bit in this register is cleared, this indicates that the corresponding bit in the identifier acceptance register must be the same as its identifier bit before a match is detected. The message is accepted if all such bits match. If a bit is set, it indicates that the state of the corresponding bit in the identifier acceptance register does not affect whether or not the message is accepted. 0 Match corresponding acceptance code register and identifier bits 1 Ignore corresponding acceptance code register bit

Module Base + 0x001C to Module Base + 0x001F — Access: User read/write[1]

	7	6	5	4	3	2	1	0
R W	AM7	AM6	AM5	AM4	AM3	AM2	AM1	AM0
Reset	0	0	0	0	0	0	0	0

Figure 11-23. MSCAN Identifier Mask Registers (Second Bank) — CANIDMR4–CANIDMR7

1. Read: Anytime
   Write: Anytime in initialization mode (INITRQ = 1 and INITAK = 1)

Table 11-25. CANIDMR4–CANIDMR7 Register Field Descriptions

Field	Description
7-0 AM[7:0]	**Acceptance Mask Bits** — If a particular bit in this register is cleared, this indicates that the corresponding bit in the identifier acceptance register must be the same as its identifier bit before a match is detected. The message is accepted if all such bits match. If a bit is set, it indicates that the state of the corresponding bit in the identifier acceptance register does not affect whether or not the message is accepted. 0 Match corresponding acceptance code register and identifier bits 1 Ignore corresponding acceptance code register bit

11.3.3 Programmer's Model of Message Storage

The following section details the organization of the receive and transmit message buffers and the associated control registers.

To simplify the programmer interface, the receive and transmit message buffers have the same outline. Each message buffer allocates 16 bytes in the memory map containing a 13 byte data structure.

An additional transmit buffer priority register (TBPR) is defined for the transmit buffers. Within the last two bytes of this memory map, the MSCAN stores a special 16-bit time stamp, which is sampled from an internal timer after successful transmission or reception of a message. This feature is only available for transmit and receiver buffers, if the TIME bit is set (see Section 11.3.2.1, "MSCAN Control Register 0 (CANCTL0)").

The time stamp register is written by the MSCAN. The CPU can only read these registers.

Table 11-26. Message Buffer Organization

Offset Address	Register	Access
0x00X0	Identifier Register 0	R/W
0x00X1	Identifier Register 1	R/W
0x00X2	Identifier Register 2	R/W
0x00X3	Identifier Register 3	R/W
0x00X4	Data Segment Register 0	R/W
0x00X5	Data Segment Register 1	R/W
0x00X6	Data Segment Register 2	R/W
0x00X7	Data Segment Register 3	R/W
0x00X8	Data Segment Register 4	R/W
0x00X9	Data Segment Register 5	R/W
0x00XA	Data Segment Register 6	R/W
0x00XB	Data Segment Register 7	R/W
0x00XC	Data Length Register	R/W
0x00XD	Transmit Buffer Priority Register(1)	R/W
0x00XE	Time Stamp Register (High Byte)	R
0x00XF	Time Stamp Register (Low Byte)	R

1. Not applicable for receive buffers

Figure 11-24 shows the common 13-byte data structure of receive and transmit buffers for extended identifiers. The mapping of standard identifiers into the IDR registers is shown in Figure 11-25.

All bits of the receive and transmit buffers are 'x' out of reset because of RAM-based implementation[1]. All reserved or unused bits of the receive and transmit buffers always read 'x'.

1. Exception: The transmit buffer priority registers are 0 out of reset.

Figure 11-24. Receive/Transmit Message Buffer — Extended Identifier Mapping

Register Name		Bit 7	6	5	4	3	2	1	Bit0
0x00X0 IDR0	R/W	ID28	ID27	ID26	ID25	ID24	ID23	ID22	ID21
0x00X1 IDR1	R/W	ID20	ID19	ID18	SRR (=1)	IDE (=1)	ID17	ID16	ID15
0x00X2 IDR2	R/W	ID14	ID13	ID12	ID11	ID10	ID9	ID8	ID7
0x00X3 IDR3	R/W	ID6	ID5	ID4	ID3	ID2	ID1	ID0	RTR
0x00X4 DSR0	R/W	DB7	DB6	DB5	DB4	DB3	DB2	DB1	DB0
0x00X5 DSR1	R/W	DB7	DB6	DB5	DB4	DB3	DB2	DB1	DB0
0x00X6 DSR2	R/W	DB7	DB6	DB5	DB4	DB3	DB2	DB1	DB0
0x00X7 DSR3	R/W	DB7	DB6	DB5	DB4	DB3	DB2	DB1	DB0
0x00X8 DSR4	R/W	DB7	DB6	DB5	DB4	DB3	DB2	DB1	DB0
0x00X9 DSR5	R/W	DB7	DB6	DB5	DB4	DB3	DB2	DB1	DB0
0x00XA DSR6	R/W	DB7	DB6	DB5	DB4	DB3	DB2	DB1	DB0
0x00XB DSR7	R/W	DB7	DB6	DB5	DB4	DB3	DB2	DB1	DB0
0x00XC DLR	R/W					DLC3	DLC2	DLC1	DLC0

Figure 11-24. Receive/Transmit Message Buffer — Extended Identifier Mapping (continued)

Register Name	Bit 7	6	5	4	3	2	1	Bit0

= Unused, always read 'x'

Read:

- For transmit buffers, anytime when TXEx flag is set (see Section 11.3.2.7, "MSCAN Transmitter Flag Register (CANTFLG)") and the corresponding transmit buffer is selected in CANTBSEL (see Section 11.3.2.11, "MSCAN Transmit Buffer Selection Register (CANTBSEL)").
- For receive buffers, only when RXF flag is set (see Section 11.3.2.5, "MSCAN Receiver Flag Register (CANRFLG)").

Write:

- For transmit buffers, anytime when TXEx flag is set (see Section 11.3.2.7, "MSCAN Transmitter Flag Register (CANTFLG)") and the corresponding transmit buffer is selected in CANTBSEL (see Section 11.3.2.11, "MSCAN Transmit Buffer Selection Register (CANTBSEL)").
- Unimplemented for receive buffers.

Reset: Undefined because of RAM-based implementation

Figure 11-25. Receive/Transmit Message Buffer — Standard Identifier Mapping

Register Name		Bit 7	6	5	4	3	2	1	Bit 0
IDR0 0x00X0	R/W	ID10	ID9	ID8	ID7	ID6	ID5	ID4	ID3
IDR1 0x00X1	R/W	ID2	ID1	ID0	RTR	IDE (=0)			
IDR2 0x00X2	R/W								
IDR3 0x00X3	R/W								

= Unused, always read 'x'

11.3.3.1 Identifier Registers (IDR0–IDR3)

The identifier registers for an extended format identifier consist of a total of 32 bits: ID[28:0], SRR, IDE, and RTR. The identifier registers for a standard format identifier consist of a total of 13 bits: ID[10:0], RTR, and IDE.

11.3.3.1.1 IDR0–IDR3 for Extended Identifier Mapping

Module Base + 0x00X0

	7	6	5	4	3	2	1	0
R W	ID28	ID27	ID26	ID25	ID24	ID23	ID22	ID21
Reset:	x	x	x	x	x	x	x	x

Figure 11-26. Identifier Register 0 (IDR0) — Extended Identifier Mapping

Table 11-27. IDR0 Register Field Descriptions — Extended

Field	Description
7-0 ID[28:21]	**Extended Format Identifier —** The identifiers consist of 29 bits (ID[28:0]) for the extended format. ID28 is the most significant bit and is transmitted first on the CAN bus during the arbitration procedure. The priority of an identifier is defined to be highest for the smallest binary number.

Module Base + 0x00X1

	7	6	5	4	3	2	1	0
R W	ID20	ID19	ID18	SRR (=1)	IDE (=1)	ID17	ID16	ID15
Reset:	x	x	x	x	x	x	x	x

Figure 11-27. Identifier Register 1 (IDR1) — Extended Identifier Mapping

Table 11-28. IDR1 Register Field Descriptions — Extended

Field	Description
7-5 ID[20:18]	**Extended Format Identifier —** The identifiers consist of 29 bits (ID[28:0]) for the extended format. ID28 is the most significant bit and is transmitted first on the CAN bus during the arbitration procedure. The priority of an identifier is defined to be highest for the smallest binary number.
4 SRR	**Substitute Remote Request** — This fixed recessive bit is used only in extended format. It must be set to 1 by the user for transmission buffers and is stored as received on the CAN bus for receive buffers.
3 IDE	**ID Extended** — This flag indicates whether the extended or standard identifier format is applied in this buffer. In the case of a receive buffer, the flag is set as received and indicates to the CPU how to process the buffer identifier registers. In the case of a transmit buffer, the flag indicates to the MSCAN what type of identifier to send. 0 Standard format (11 bit) 1 Extended format (29 bit)
2-0 ID[17:15]	**Extended Format Identifier —** The identifiers consist of 29 bits (ID[28:0]) for the extended format. ID28 is the most significant bit and is transmitted first on the CAN bus during the arbitration procedure. The priority of an identifier is defined to be highest for the smallest binary number.

Module Base + 0x00X2

	7	6	5	4	3	2	1	0
R W	ID14	ID13	ID12	ID11	ID10	ID9	ID8	ID7
Reset:	x	x	x	x	x	x	x	x

Figure 11-28. Identifier Register 2 (IDR2) — Extended Identifier Mapping

Table 11-29. IDR2 Register Field Descriptions — Extended

Field	Description
7-0 ID[14:7]	**Extended Format Identifier —** The identifiers consist of 29 bits (ID[28:0]) for the extended format. ID28 is the most significant bit and is transmitted first on the CAN bus during the arbitration procedure. The priority of an identifier is defined to be highest for the smallest binary number.

Module Base + 0x00X3

	7	6	5	4	3	2	1	0
R W	ID6	ID5	ID4	ID3	ID2	ID1	ID0	RTR
Reset:	x	x	x	x	x	x	x	x

Figure 11-29. Identifier Register 3 (IDR3) — Extended Identifier Mapping

Table 11-30. IDR3 Register Field Descriptions — Extended

Field	Description
7-1 ID[6:0]	**Extended Format Identifier —** The identifiers consist of 29 bits (ID[28:0]) for the extended format. ID28 is the most significant bit and is transmitted first on the CAN bus during the arbitration procedure. The priority of an identifier is defined to be highest for the smallest binary number.
0 RTR	**Remote Transmission Request** — This flag reflects the status of the remote transmission request bit in the CAN frame. In the case of a receive buffer, it indicates the status of the received frame and supports the transmission of an answering frame in software. In the case of a transmit buffer, this flag defines the setting of the RTR bit to be sent. 0 Data frame 1 Remote frame

11.3.3.1.2 IDR0–IDR3 for Standard Identifier Mapping

Module Base + 0x00X0

	7	6	5	4	3	2	1	0
R W	ID10	ID9	ID8	ID7	ID6	ID5	ID4	ID3
Reset:	x	x	x	x	x	x	x	x

Figure 11-30. Identifier Register 0 — Standard Mapping

Table 11-31. IDR0 Register Field Descriptions — Standard

Field	Description
7-0 ID[10:3]	**Standard Format Identifier —** The identifiers consist of 11 bits (ID[10:0]) for the standard format. ID10 is the most significant bit and is transmitted first on the CAN bus during the arbitration procedure. The priority of an identifier is defined to be highest for the smallest binary number. See also ID bits in Table 11-32.

Module Base + 0x00X1

	7	6	5	4	3	2	1	0
R W	ID2	ID1	ID0	RTR	IDE (=0)			
Reset:	x	x	x	x	x	x	x	x

= Unused; always read 'x'

Figure 11-31. Identifier Register 1 — Standard Mapping

Table 11-32. IDR1 Register Field Descriptions

Field	Description
7-5 ID[2:0]	**Standard Format Identifier —** The identifiers consist of 11 bits (ID[10:0]) for the standard format. ID10 is the most significant bit and is transmitted first on the CAN bus during the arbitration procedure. The priority of an identifier is defined to be highest for the smallest binary number. See also ID bits in Table 11-31.
4 RTR	**Remote Transmission Request** — This flag reflects the status of the Remote Transmission Request bit in the CAN frame. In the case of a receive buffer, it indicates the status of the received frame and supports the transmission of an answering frame in software. In the case of a transmit buffer, this flag defines the setting of the RTR bit to be sent. 0 Data frame 1 Remote frame
3 IDE	**ID Extended** — This flag indicates whether the extended or standard identifier format is applied in this buffer. In the case of a receive buffer, the flag is set as received and indicates to the CPU how to process the buffer identifier registers. In the case of a transmit buffer, the flag indicates to the MSCAN what type of identifier to send. 0 Standard format (11 bit) 1 Extended format (29 bit)

Module Base + 0x00X2

	7	6	5	4	3	2	1	0
R W								
Reset:	x	x	x	x	x	x	x	x

= Unused; always read 'x'

Figure 11-32. Identifier Register 2 — Standard Mapping

Module Base + 0x00X3

	7	6	5	4	3	2	1	0
R W								
Reset:	x	x	x	x	x	x	x	x

= Unused; always read 'x'

Figure 11-33. Identifier Register 3 — Standard Mapping

11.3.3.2 Data Segment Registers (DSR0-7)

The eight data segment registers, each with bits DB[7:0], contain the data to be transmitted or received. The number of bytes to be transmitted or received is determined by the data length code in the corresponding DLR register.

Module Base + 0x00X4 to Module Base + 0x00XB

	7	6	5	4	3	2	1	0
R W	DB7	DB6	DB5	DB4	DB3	DB2	DB1	DB0
Reset:	x	x	x	x	x	x	x	x

Figure 11-34. Data Segment Registers (DSR0–DSR7) — Extended Identifier Mapping

Table 11-33. DSR0–DSR7 Register Field Descriptions

Field	Description
7-0 DB[7:0]	**Data bits 7-0**

11.3.3.3 Data Length Register (DLR)

This register keeps the data length field of the CAN frame.

Module Base + 0x00XC

	7	6	5	4	3	2	1	0
R W					DLC3	DLC2	DLC1	DLC0
Reset:	x	x	x	x	x	x	x	x

= Unused; always read "x"

Figure 11-35. Data Length Register (DLR) — Extended Identifier Mapping

Table 11-34. DLR Register Field Descriptions

Field	Description
3-0 DLC[3:0]	**Data Length Code Bits** — The data length code contains the number of bytes (data byte count) of the respective message. During the transmission of a remote frame, the data length code is transmitted as programmed while the number of transmitted data bytes is always 0. The data byte count ranges from 0 to 8 for a data frame. Table 11-35 shows the effect of setting the DLC bits.

Table 11-35. Data Length Codes

Data Length Code				Data Byte Count
DLC3	DLC2	DLC1	DLC0	
0	0	0	0	0
0	0	0	1	1
0	0	1	0	2
0	0	1	1	3
0	1	0	0	4
0	1	0	1	5
0	1	1	0	6
0	1	1	1	7
1	0	0	0	8

11.3.3.4 Transmit Buffer Priority Register (TBPR)

This register defines the local priority of the associated message buffer. The local priority is used for the internal prioritization process of the MSCAN and is defined to be highest for the smallest binary number. The MSCAN implements the following internal prioritization mechanisms:

- All transmission buffers with a cleared TXEx flag participate in the prioritization immediately before the SOF (start of frame) is sent.

- The transmission buffer with the lowest local priority field wins the prioritization.

In cases of more than one buffer having the same lowest priority, the message buffer with the lower index number wins.

Module Base + 0x00XD — Access: User read/write[1]

	7	6	5	4	3	2	1	0
R/W	PRIO7	PRIO6	PRIO5	PRIO4	PRIO3	PRIO2	PRIO1	PRIO0
Reset:	0	0	0	0	0	0	0	0

Figure 11-36. Transmit Buffer Priority Register (TBPR)

1. Read: Anytime when TXEx flag is set (see Section 11.3.2.7, "MSCAN Transmitter Flag Register (CANTFLG)") and the corresponding transmit buffer is selected in CANTBSEL (see Section 11.3.2.11, "MSCAN Transmit Buffer Selection Register (CANTBSEL)")
   Write: Anytime when TXEx flag is set (see Section 11.3.2.7, "MSCAN Transmitter Flag Register (CANTFLG)") and the corresponding transmit buffer is selected in CANTBSEL (see Section 11.3.2.11, "MSCAN Transmit Buffer Selection Register (CANTBSEL)")

11.3.3.5 Time Stamp Register (TSRH–TSRL)

If the TIME bit is enabled, the MSCAN will write a time stamp to the respective registers in the active transmit or receive buffer right after the EOF of a valid message on the CAN bus (see Section 11.3.2.1, "MSCAN Control Register 0 (CANCTL0)"). In case of a transmission, the CPU can only read the time stamp after the respective transmit buffer has been flagged empty.

The timer value, which is used for stamping, is taken from a free running internal CAN bit clock. A timer overrun is not indicated by the MSCAN. The timer is reset (all bits set to 0) during initialization mode. The CPU can only read the time stamp registers.

Module Base + 0x00XE — Access: User read/write[1]

	7	6	5	4	3	2	1	0
R	TSR15	TSR14	TSR13	TSR12	TSR11	TSR10	TSR9	TSR8
W								
Reset:	x	x	x	x	x	x	x	x

Figure 11-37. Time Stamp Register — High Byte (TSRH)

1. Read: Anytime when TXEx flag is set (see Section 11.3.2.7, "MSCAN Transmitter Flag Register (CANTFLG)") and the corresponding transmit buffer is selected in CANTBSEL (see Section 11.3.2.11, "MSCAN Transmit Buffer Selection Register (CANTBSEL)")
   Write: Unimplemented

Module Base + 0x00XF

Access: User read/write[1]

	7	6	5	4	3	2	1	0
R	TSR7	TSR6	TSR5	TSR4	TSR3	TSR2	TSR1	TSR0
W								
Reset:	x	x	x	x	x	x	x	x

Figure 11-38. Time Stamp Register — Low Byte (TSRL)

1. Read: Anytime when TXEx flag is set (see Section 11.3.2.7, "MSCAN Transmitter Flag Register (CANTFLG)") and the corresponding transmit buffer is selected in CANTBSEL (see Section 11.3.2.11, "MSCAN Transmit Buffer Selection Register (CANTBSEL)")
   Write: Unimplemented

11.4 Functional Description

11.4.1 General

This section provides a complete functional description of the MSCAN.

11.4.2 Message Storage

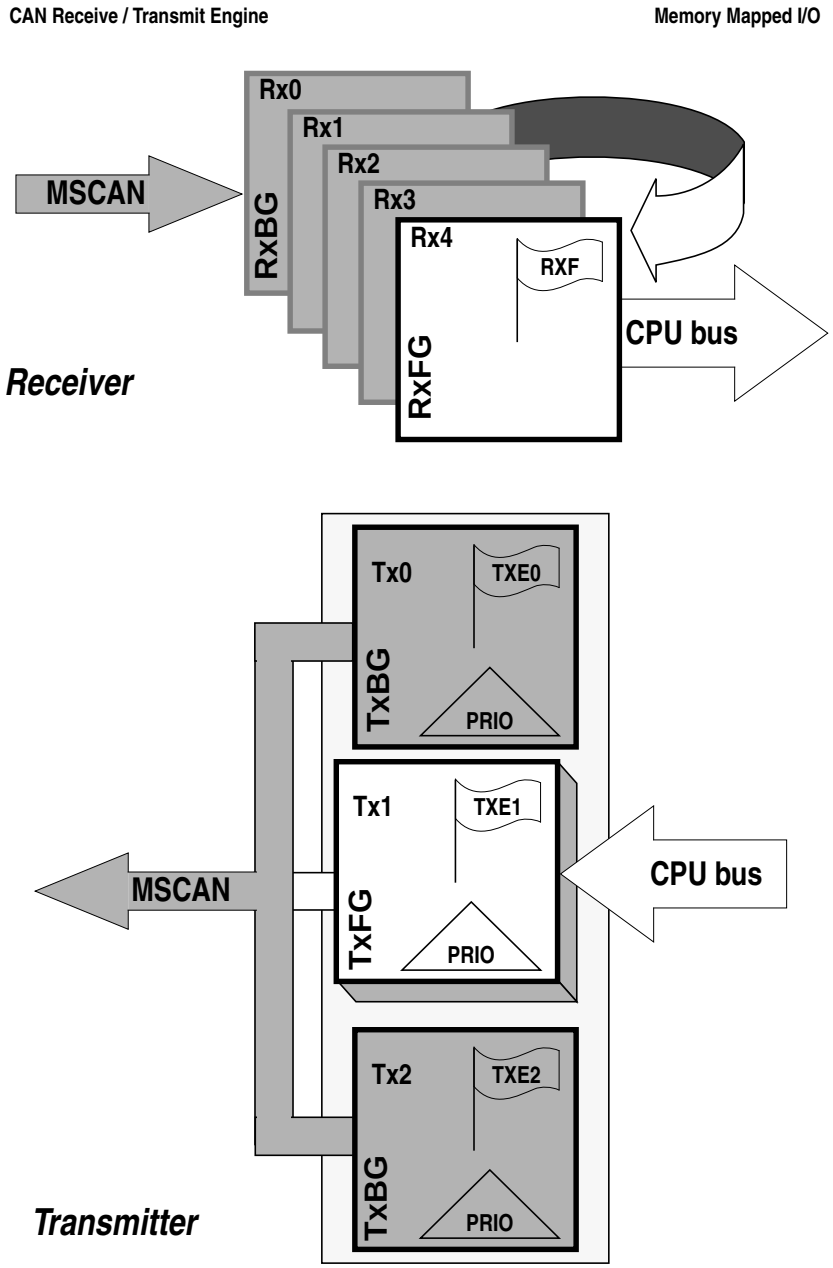

Figure 11-39. User Model for Message Buffer Organization

The MSCAN facilitates a sophisticated message storage system which addresses the requirements of a broad range of network applications.

11.4.2.1 Message Transmit Background

Modern application layer software is built upon two fundamental assumptions:

- Any CAN node is able to send out a stream of scheduled messages without releasing the CAN bus between the two messages. Such nodes arbitrate for the CAN bus immediately after sending the previous message and only release the CAN bus in case of lost arbitration.
- The internal message queue within any CAN node is organized such that the highest priority message is sent out first, if more than one message is ready to be sent.

The behavior described in the bullets above cannot be achieved with a single transmit buffer. That buffer must be reloaded immediately after the previous message is sent. This loading process lasts a finite amount of time and must be completed within the inter-frame sequence (IFS) to be able to send an uninterrupted stream of messages. Even if this is feasible for limited CAN bus speeds, it requires that the CPU reacts with short latencies to the transmit interrupt.

A double buffer scheme de-couples the reloading of the transmit buffer from the actual message sending and, therefore, reduces the reactiveness requirements of the CPU. Problems can arise if the sending of a message is finished while the CPU re-loads the second buffer. No buffer would then be ready for transmission, and the CAN bus would be released.

At least three transmit buffers are required to meet the first of the above requirements under all circumstances. The MSCAN has three transmit buffers.

The second requirement calls for some sort of internal prioritization which the MSCAN implements with the "local priority" concept described in Section 11.4.2.2, "Transmit Structures."

11.4.2.2 Transmit Structures

The MSCAN triple transmit buffer scheme optimizes real-time performance by allowing multiple messages to be set up in advance. The three buffers are arranged as shown in Figure 11-39.

All three buffers have a 13-byte data structure similar to the outline of the receive buffers (see Section 11.3.3, "Programmer's Model of Message Storage"). An additional Transmit Buffer Priority Register (TBPR) contains an 8-bit local priority field (PRIO) (see Section 11.3.3.4, "Transmit Buffer Priority Register (TBPR)"). The remaining two bytes are used for time stamping of a message, if required (see Section 11.3.3.5, "Time Stamp Register (TSRH–TSRL)").

To transmit a message, the CPU must identify an available transmit buffer, which is indicated by a set transmitter buffer empty (TXEx) flag (see Section 11.3.2.7, "MSCAN Transmitter Flag Register (CANTFLG)"). If a transmit buffer is available, the CPU must set a pointer to this buffer by writing to the CANTBSEL register (see Section 11.3.2.11, "MSCAN Transmit Buffer Selection Register (CANTBSEL)"). This makes the respective buffer accessible within the CANTXFG address space (see Section 11.3.3, "Programmer's Model of Message Storage"). The algorithmic feature associated with the CANTBSEL register simplifies the transmit buffer selection. In addition, this scheme makes the handler

software simpler because only one address area is applicable for the transmit process, and the required address space is minimized.

The CPU then stores the identifier, the control bits, and the data content into one of the transmit buffers. Finally, the buffer is flagged as ready for transmission by clearing the associated TXE flag.

The MSCAN then schedules the message for transmission and signals the successful transmission of the buffer by setting the associated TXE flag. A transmit interrupt (see Section 11.4.7.2, "Transmit Interrupt") is generated[1] when TXEx is set and can be used to drive the application software to re-load the buffer.

If more than one buffer is scheduled for transmission when the CAN bus becomes available for arbitration, the MSCAN uses the local priority setting of the three buffers to determine the prioritization. For this purpose, every transmit buffer has an 8-bit local priority field (PRIO). The application software programs this field when the message is set up. The local priority reflects the priority of this particular message relative to the set of messages being transmitted from this node. The lowest binary value of the PRIO field is defined to be the highest priority. The internal scheduling process takes place whenever the MSCAN arbitrates for the CAN bus. This is also the case after the occurrence of a transmission error.

When a high priority message is scheduled by the application software, it may become necessary to abort a lower priority message in one of the three transmit buffers. Because messages that are already in transmission cannot be aborted, the user must request the abort by setting the corresponding abort request bit (ABTRQ) (see Section 11.3.2.9, "MSCAN Transmitter Message Abort Request Register (CANTARQ)".) The MSCAN then grants the request, if possible, by:

1. Setting the corresponding abort acknowledge flag (ABTAK) in the CANTAAK register.
2. Setting the associated TXE flag to release the buffer.
3. Generating a transmit interrupt. The transmit interrupt handler software can determine from the setting of the ABTAK flag whether the message was aborted (ABTAK = 1) or sent (ABTAK = 0).

11.4.2.3 Receive Structures

The received messages are stored in a five stage input FIFO. The five message buffers are alternately mapped into a single memory area (see Figure 11-39). The background receive buffer (RxBG) is exclusively associated with the MSCAN, but the foreground receive buffer (RxFG) is addressable by the CPU (see Figure 11-39). This scheme simplifies the handler software because only one address area is applicable for the receive process.

All receive buffers have a size of 15 bytes to store the CAN control bits, the identifier (standard or extended), the data contents, and a time stamp, if enabled (see Section 11.3.3, "Programmer's Model of Message Storage").

The receiver full flag (RXF) (see Section 11.3.2.5, "MSCAN Receiver Flag Register (CANRFLG)") signals the status of the foreground receive buffer. When the buffer contains a correctly received message with a matching identifier, this flag is set.

On reception, each message is checked to see whether it passes the filter (see Section 11.4.3, "Identifier Acceptance Filter") and simultaneously is written into the active RxBG. After successful reception of a valid message, the MSCAN shifts the content of RxBG into the receiver FIFO, sets the RXF flag, and

1. The transmit interrupt occurs only if not masked. A polling scheme can be applied on TXEx also.

generates a receive interrupt[1] (see Section 11.4.7.3, "Receive Interrupt") to the CPU. The user's receive handler must read the received message from the RxFG and then reset the RXF flag to acknowledge the interrupt and to release the foreground buffer. A new message, which can follow immediately after the IFS field of the CAN frame, is received into the next available RxBG. If the MSCAN receives an invalid message in its RxBG (wrong identifier, transmission errors, etc.) the actual contents of the buffer will be over-written by the next message. The buffer will then not be shifted into the FIFO.

When the MSCAN module is transmitting, the MSCAN receives its own transmitted messages into the background receive buffer, RxBG, but does not shift it into the receiver FIFO, generate a receive interrupt, or acknowledge its own messages on the CAN bus. The exception to this rule is in loopback mode (see Section 11.3.2.2, "MSCAN Control Register 1 (CANCTL1)") where the MSCAN treats its own messages exactly like all other incoming messages. The MSCAN receives its own transmitted messages in the event that it loses arbitration. If arbitration is lost, the MSCAN must be prepared to become a receiver.

An overrun condition occurs when all receive message buffers in the FIFO are filled with correctly received messages with accepted identifiers and another message is correctly received from the CAN bus with an accepted identifier. The latter message is discarded and an error interrupt with overrun indication is generated if enabled (see Section 11.4.7.5, "Error Interrupt"). The MSCAN remains able to transmit messages while the receiver FIFO is being filled, but all incoming messages are discarded. As soon as a receive buffer in the FIFO is available again, new valid messages will be accepted.

11.4.3 Identifier Acceptance Filter

The MSCAN identifier acceptance registers (see Section 11.3.2.12, "MSCAN Identifier Acceptance Control Register (CANIDAC)") define the acceptable patterns of the standard or extended identifier (ID[10:0] or ID[28:0]). Any of these bits can be marked 'don't care' in the MSCAN identifier mask registers (see Section 11.3.2.18, "MSCAN Identifier Mask Registers (CANIDMR0–CANIDMR7)").

A filter hit is indicated to the application software by a set receive buffer full flag (RXF = 1) and three bits in the CANIDAC register (see Section 11.3.2.12, "MSCAN Identifier Acceptance Control Register (CANIDAC)"). These identifier hit flags (IDHIT[2:0]) clearly identify the filter section that caused the acceptance. They simplify the application software's task to identify the cause of the receiver interrupt. If more than one hit occurs (two or more filters match), the lower hit has priority.

A very flexible programmable generic identifier acceptance filter has been introduced to reduce the CPU interrupt loading. The filter is programmable to operate in four different modes:

- Two identifier acceptance filters, each to be applied to:
  - The full 29 bits of the extended identifier and to the following bits of the CAN 2.0B frame:
    - Remote transmission request (RTR)
    - Identifier extension (IDE)
    - Substitute remote request (SRR)
  - The 11 bits of the standard identifier plus the RTR and IDE bits of the CAN 2.0A/B messages. This mode implements two filters for a full length CAN 2.0B compliant extended identifier. Although this mode can be used for standard identifiers, it is recommended to use the four or eight identifier acceptance filters.

1. The receive interrupt occurs only if not masked. A polling scheme can be applied on RXF also.

Figure 11-40 shows how the first 32-bit filter bank (CANIDAR0–CANIDAR3, CANIDMR0–CANIDMR3) produces a filter 0 hit. Similarly, the second filter bank (CANIDAR4–CANIDAR7, CANIDMR4–CANIDMR7) produces a filter 1 hit.

- Four identifier acceptance filters, each to be applied to:
  - The 14 most significant bits of the extended identifier plus the SRR and IDE bits of CAN 2.0B messages.
  - The 11 bits of the standard identifier, the RTR and IDE bits of CAN 2.0A/B messages. Figure 11-41 shows how the first 32-bit filter bank (CANIDAR0–CANIDAR3, CANIDMR0–CANIDMR3) produces filter 0 and 1 hits. Similarly, the second filter bank (CANIDAR4–CANIDAR7, CANIDMR4–CANIDMR7) produces filter 2 and 3 hits.
- Eight identifier acceptance filters, each to be applied to the first 8 bits of the identifier. This mode implements eight independent filters for the first 8 bits of a CAN 2.0A/B compliant standard identifier or a CAN 2.0B compliant extended identifier.
  Figure 11-42 shows how the first 32-bit filter bank (CANIDAR0–CANIDAR3, CANIDMR0–CANIDMR3) produces filter 0 to 3 hits. Similarly, the second filter bank (CANIDAR4–CANIDAR7, CANIDMR4–CANIDMR7) produces filter 4 to 7 hits.
- Closed filter. No CAN message is copied into the foreground buffer RxFG, and the RXF flag is never set.

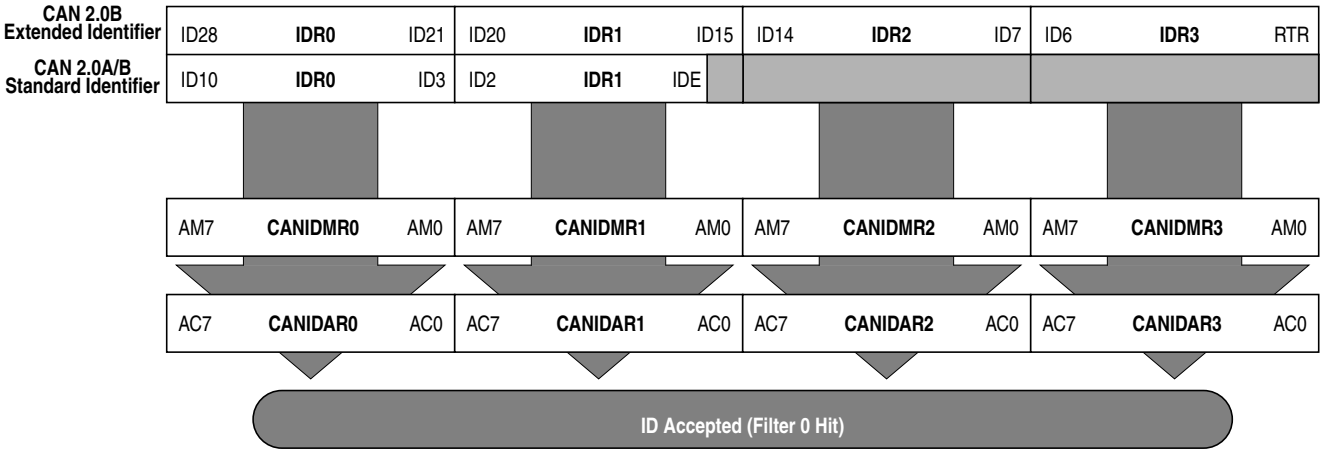

Figure 11-40. 32-bit Maskable Identifier Acceptance Filter

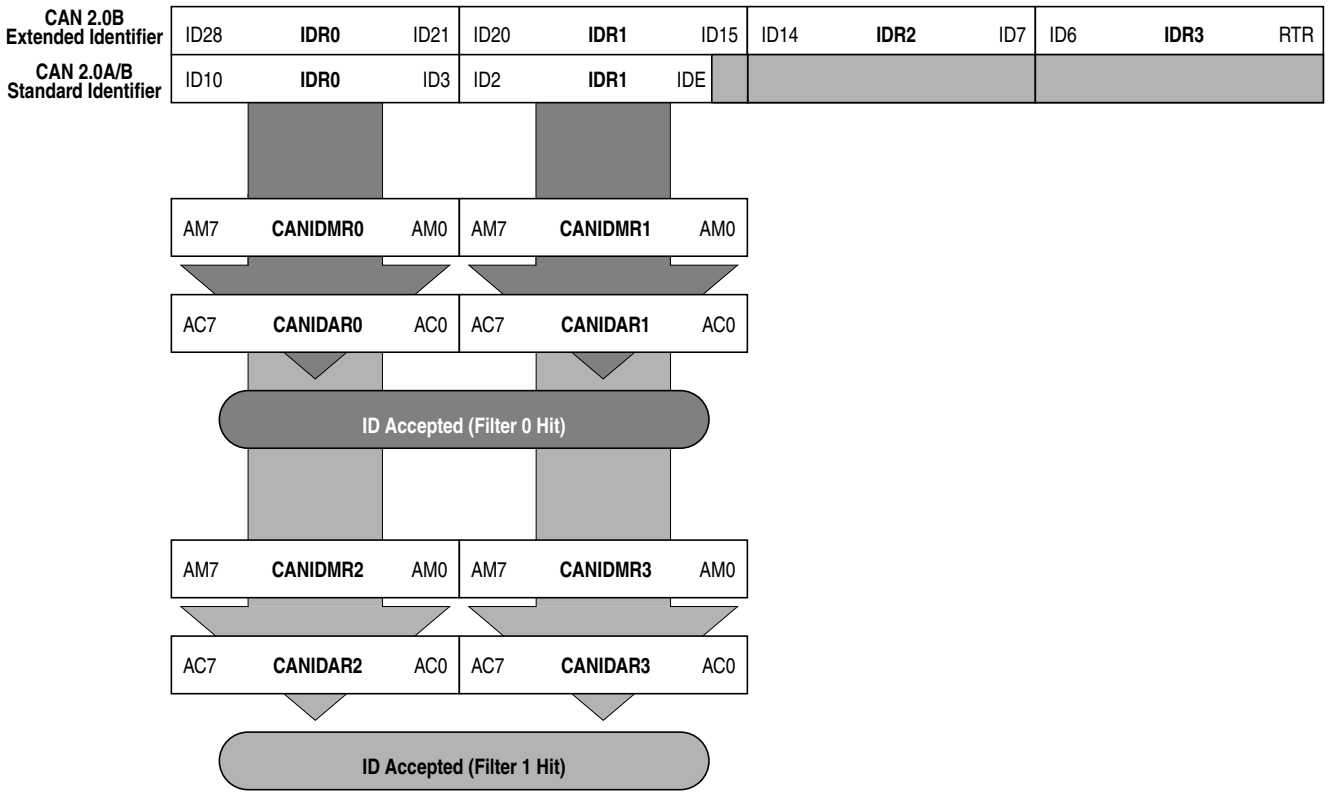

Figure 11-41. 16-bit Maskable Identifier Acceptance Filters

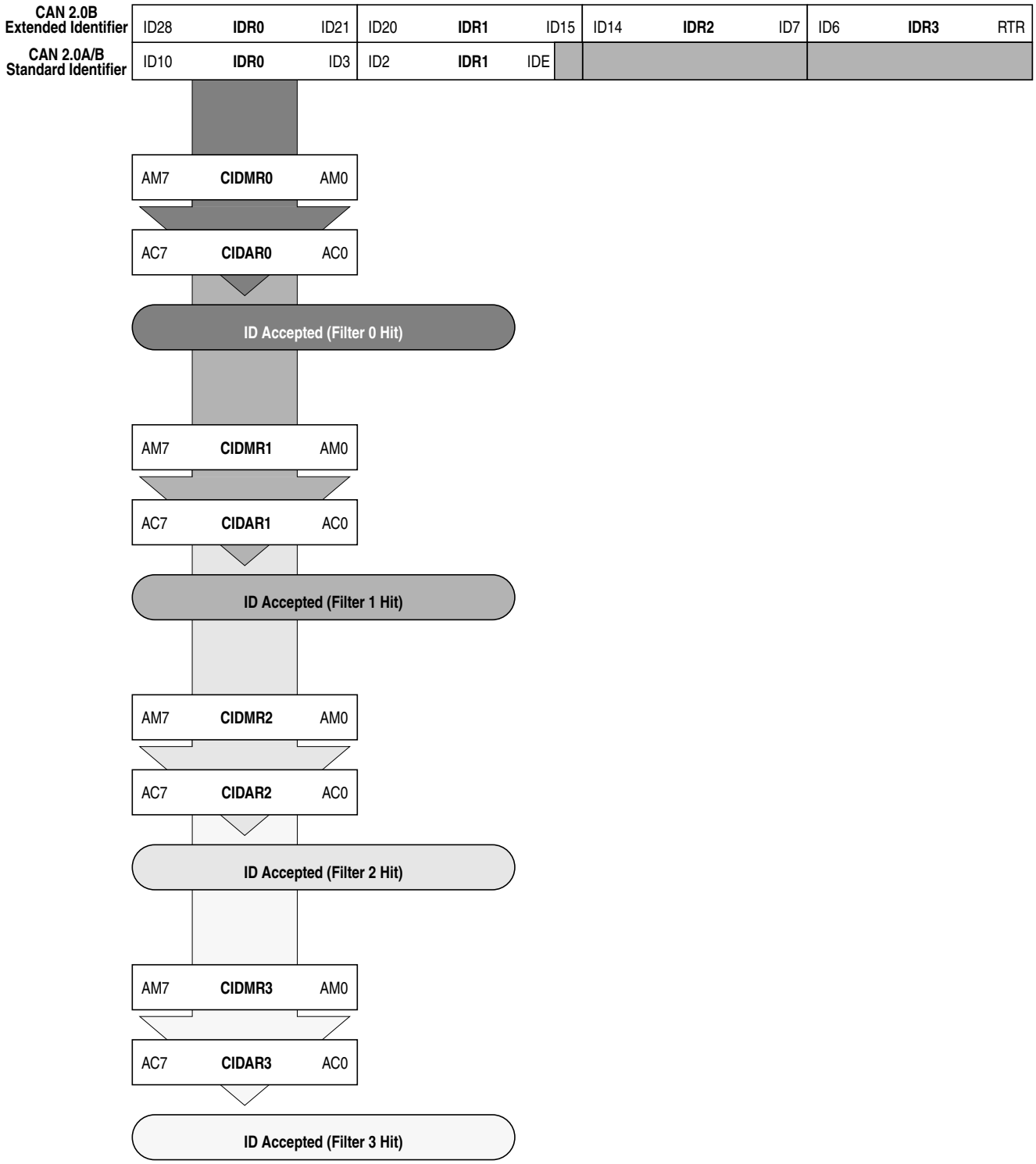

Figure 11-42. 8-bit Maskable Identifier Acceptance Filters

11.4.3.1 Protocol Violation Protection

The MSCAN protects the user from accidentally violating the CAN protocol through programming errors. The protection logic implements the following features:

- The receive and transmit error counters cannot be written or otherwise manipulated.
- All registers which control the configuration of the MSCAN cannot be modified while the MSCAN is on-line. The MSCAN has to be in Initialization Mode. The corresponding INITRQ/INITAK handshake bits in the CANCTL0/CANCTL1 registers (see Section 11.3.2.1, "MSCAN Control Register 0 (CANCTL0)") serve as a lock to protect the following registers:
  - MSCAN control 1 register (CANCTL1)
  - MSCAN bus timing registers 0 and 1 (CANBTR0, CANBTR1)
  - MSCAN identifier acceptance control register (CANIDAC)
  - MSCAN identifier acceptance registers (CANIDAR0–CANIDAR7)
  - MSCAN identifier mask registers (CANIDMR0–CANIDMR7)
- The TXCAN is immediately forced to a recessive state when the MSCAN goes into the power down mode or initialization mode (see Section 11.4.5.6, "MSCAN Power Down Mode," and Section 11.4.4.5, "MSCAN Initialization Mode").
- The MSCAN enable bit (CANE) is writable only once in normal system operation modes, which provides further protection against inadvertently disabling the MSCAN.

11.4.3.2 Clock System

Figure 11-43 shows the structure of the MSCAN clock generation circuitry.

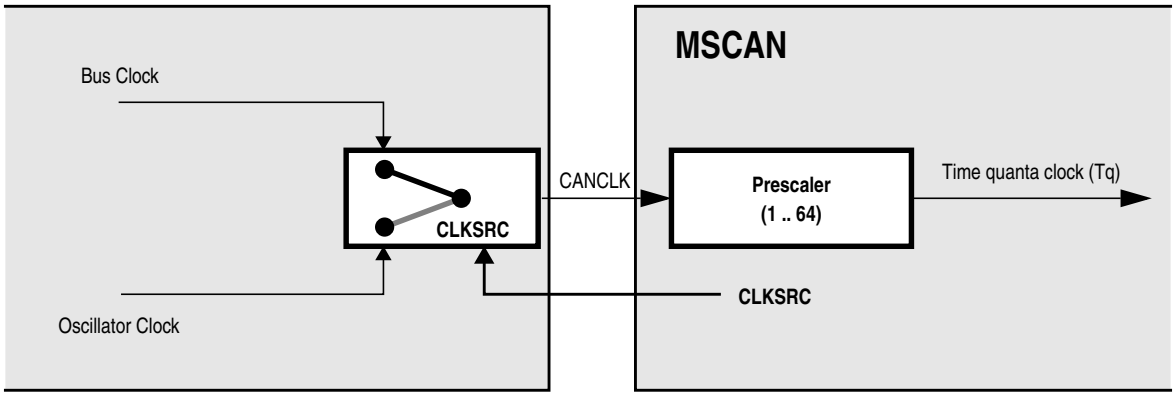

Figure 11-43. MSCAN Clocking Scheme

The clock source bit (CLKSRC) in the CANCTL1 register (11.3.2.2/11-303) defines whether the internal CANCLK is connected to the output of a crystal oscillator (oscillator clock) or to the bus clock.

The clock source has to be chosen such that the tight oscillator tolerance requirements (up to 0.4%) of the CAN protocol are met. Additionally, for high CAN bus rates (1 Mbps), a 45% to 55% duty cycle of the clock is required.

If the bus clock is generated from a PLL, it is recommended to select the oscillator clock rather than the bus clock due to jitter considerations, especially at the faster CAN bus rates.

For microcontrollers without a clock and reset generator (CRG), CANCLK is driven from the crystal oscillator (oscillator clock).

A programmable prescaler generates the time quanta (Tq) clock from CANCLK. A time quantum is the atomic unit of time handled by the MSCAN.

Eqn. 11-2

$$Tq = \frac{f_{CANCLK}}{(\text{Prescaler value})}$$

A bit time is subdivided into three segments as described in the Bosch CAN 2.0A/B specification. (see Figure 11-44):

- SYNC_SEG: This segment has a fixed length of one time quantum. Signal edges are expected to happen within this section.
- Time Segment 1: This segment includes the PROP_SEG and the PHASE_SEG1 of the CAN standard. It can be programmed by setting the parameter TSEG1 to consist of 4 to 16 time quanta.
- Time Segment 2: This segment represents the PHASE_SEG2 of the CAN standard. It can be programmed by setting the TSEG2 parameter to be 2 to 8 time quanta long.

Eqn. 11-3

$$\text{Bit Rate} = \frac{f_{Tq}}{(\text{number of Time Quanta})}$$

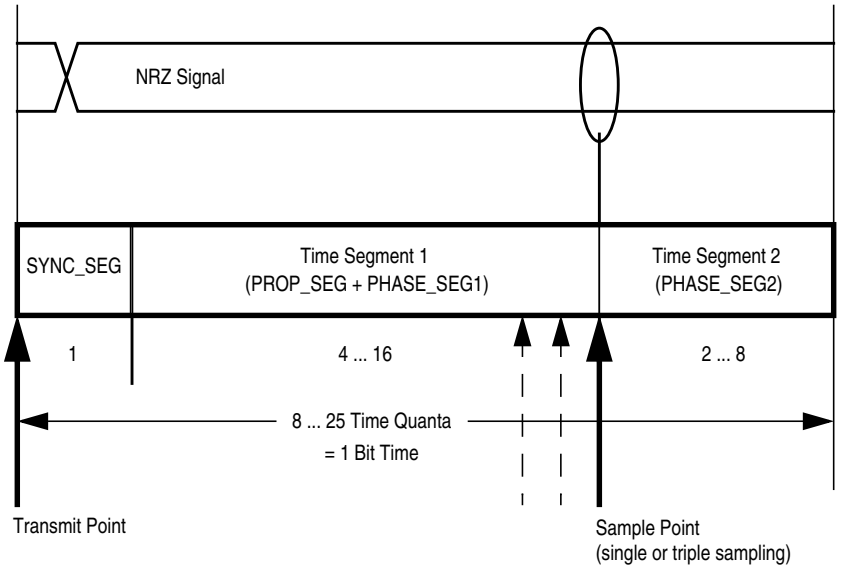

Figure 11-44. Segments within the Bit Time

Table 11-36. Time Segment Syntax

Syntax	Description
SYNC_SEG	System expects transitions to occur on the CAN bus during this period.
Transmit Point	A node in transmit mode transfers a new value to the CAN bus at this point.
Sample Point	A node in receive mode samples the CAN bus at this point. If the three samples per bit option is selected, then this point marks the position of the third sample.

The synchronization jump width (see the Bosch CAN 2.0A/B specification for details) can be programmed in a range of 1 to 4 time quanta by setting the SJW parameter.

The SYNC_SEG, TSEG1, TSEG2, and SJW parameters are set by programming the MSCAN bus timing registers (CANBTR0, CANBTR1) (see Section 11.3.2.3, "MSCAN Bus Timing Register 0 (CANBTR0)" and Section 11.3.2.4, "MSCAN Bus Timing Register 1 (CANBTR1)").

Table 11-37 gives an overview of the Bosch CAN 2.0A/B specification compliant segment settings and the related parameter values.

NOTE

It is the user's responsibility to ensure the bit time settings are in compliance with the CAN standard.

Table 11-37. Bosch CAN 2.0A/B Compliant Bit Time Segment Settings

Time Segment 1	TSEG1	Time Segment 2	TSEG2	Synchronization Jump Width	SJW
5 .. 10	4 .. 9	2	1	1 .. 2	0 .. 1
4 .. 11	3 .. 10	3	2	1 .. 3	0 .. 2
5 .. 12	4 .. 11	4	3	1 .. 4	0 .. 3
6 .. 13	5 .. 12	5	4	1 .. 4	0 .. 3
7 .. 14	6 .. 13	6	5	1 .. 4	0 .. 3
8 .. 15	7 .. 14	7	6	1 .. 4	0 .. 3
9 .. 16	8 .. 15	8	7	1 .. 4	0 .. 3

11.4.4 Modes of Operation

11.4.4.1 Normal System Operating Modes

The MSCAN module behaves as described within this specification in all normal system operating modes. Write restrictions exist for some registers.

11.4.4.2 Special System Operating Modes

The MSCAN module behaves as described within this specification in all special system operating modes. Write restrictions which exist on specific registers in normal modes are lifted for test purposes in special modes.

11.4.4.3 Emulation Modes

In all emulation modes, the MSCAN module behaves just like in normal system operating modes as described within this specification.

11.4.4.4 Listen-Only Mode

In an optional CAN bus monitoring mode (listen-only), the CAN node is able to receive valid data frames and valid remote frames, but it sends only "recessive" bits on the CAN bus. In addition, it cannot start a transmission.

If the MAC sub-layer is required to send a "dominant" bit (ACK bit, overload flag, or active error flag), the bit is rerouted internally so that the MAC sub-layer monitors this "dominant" bit, although the CAN bus may remain in recessive state externally.

11.4.4.5 MSCAN Initialization Mode

The MSCAN enters initialization mode when it is enabled (CANE=1).

When entering initialization mode during operation, any on-going transmission or reception is immediately aborted and synchronization to the CAN bus is lost, potentially causing CAN protocol violations. To protect the CAN bus system from fatal consequences of violations, the MSCAN immediately drives TXCAN into a recessive state.

NOTE

The user is responsible for ensuring that the MSCAN is not active when initialization mode is entered. The recommended procedure is to bring the MSCAN into sleep mode (SLPRQ = 1 and SLPAK = 1) before setting the INITRQ bit in the CANCTL0 register. Otherwise, the abort of an on-going message can cause an error condition and can impact other CAN bus devices.

In initialization mode, the MSCAN is stopped. However, interface registers remain accessible. This mode is used to reset the CANCTL0, CANRFLG, CANRIER, CANTFLG, CANTIER, CANTARQ, CANTAAK, and CANTBSEL registers to their default values. In addition, the MSCAN enables the configuration of the CANBTR0, CANBTR1 bit timing registers; CANIDAC; and the CANIDAR, CANIDMR message filters. See Section 11.3.2.1, "MSCAN Control Register 0 (CANCTL0)," for a detailed description of the initialization mode.

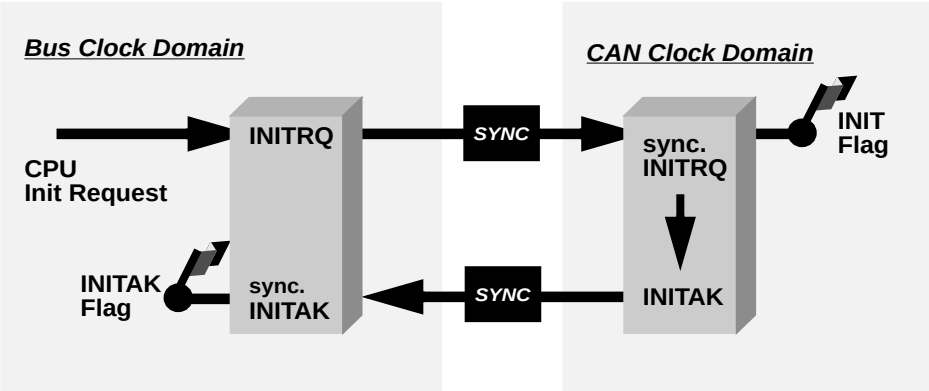

Figure 11-45. Initialization Request/Acknowledge Cycle

Due to independent clock domains within the MSCAN, INITRQ must be synchronized to all domains by using a special handshake mechanism. This handshake causes additional synchronization delay (see Figure 11-45).

If there is no message transfer ongoing on the CAN bus, the minimum delay will be two additional bus clocks and three additional CAN clocks. When all parts of the MSCAN are in initialization mode, the INITAK flag is set. The application software must use INITAK as a handshake indication for the request (INITRQ) to go into initialization mode.

NOTE

The CPU cannot clear INITRQ before initialization mode (INITRQ = 1 and INITAK = 1) is active.

11.4.5 Low-Power Options

If the MSCAN is disabled (CANE = 0), the MSCAN clocks are stopped for power saving.

If the MSCAN is enabled (CANE = 1), the MSCAN has two additional modes with reduced power consumption, compared to normal mode: sleep and power down mode. In sleep mode, power consumption is reduced by stopping all clocks except those to access the registers from the CPU side. In power down mode, all clocks are stopped and no power is consumed.

Table 11-38 summarizes the combinations of MSCAN and CPU modes. A particular combination of modes is entered by the given settings on the CSWAI and SLPRQ/SLPAK bits.

Table 11-38. CPU vs. MSCAN Operating Modes

CPU Mode	MSCAN Mode			
	Normal	Reduced Power Consumption		
		Sleep	Power Down	Disabled (CANE=0)
RUN	CSWAI = X[1] SLPRQ = 0 SLPAK = 0	CSWAI = X SLPRQ = 1 SLPAK = 1		CSWAI = X SLPRQ = X SLPAK = X
WAIT	CSWAI = 0 SLPRQ = 0 SLPAK = 0	CSWAI = 0 SLPRQ = 1 SLPAK = 1	CSWAI = 1 SLPRQ = X SLPAK = X	CSWAI = X SLPRQ = X SLPAK = X
STOP			CSWAI = X SLPRQ = X SLPAK = X	CSWAI = X SLPRQ = X SLPAK = X

1. 'X' means don't care.

11.4.5.1 Operation in Run Mode

As shown in Table 11-38, only MSCAN sleep mode is available as low power option when the CPU is in run mode.

11.4.5.2 Operation in Wait Mode

The WAI instruction puts the MCU in a low power consumption stand-by mode. If the CSWAI bit is set, additional power can be saved in power down mode because the CPU clocks are stopped. After leaving this power down mode, the MSCAN restarts and enters normal mode again.

While the CPU is in wait mode, the MSCAN can be operated in normal mode and generate interrupts (registers can be accessed via background debug mode).

11.4.5.3 Operation in Stop Mode

The STOP instruction puts the MCU in a low power consumption stand-by mode. In stop mode, the MSCAN is set in power down mode regardless of the value of the SLPRQ/SLPAK and CSWAI bits (Table 11-38).

11.4.5.4 MSCAN Normal Mode

This is a non-power-saving mode. Enabling the MSCAN puts the module from disabled mode into normal mode. In this mode the module can either be in initialization mode or out of initialization mode. See Section 11.4.4.5, "MSCAN Initialization Mode".

11.4.5.5 MSCAN Sleep Mode

The CPU can request the MSCAN to enter this low power mode by asserting the SLPRQ bit in the CANCTL0 register. The time when the MSCAN enters sleep mode depends on a fixed synchronization delay and its current activity:

- If there are one or more message buffers scheduled for transmission (TXEx = 0), the MSCAN will continue to transmit until all transmit message buffers are empty (TXEx = 1, transmitted successfully or aborted) and then goes into sleep mode.
- If the MSCAN is receiving, it continues to receive and goes into sleep mode as soon as the CAN bus next becomes idle.
- If the MSCAN is neither transmitting nor receiving, it immediately goes into sleep mode.

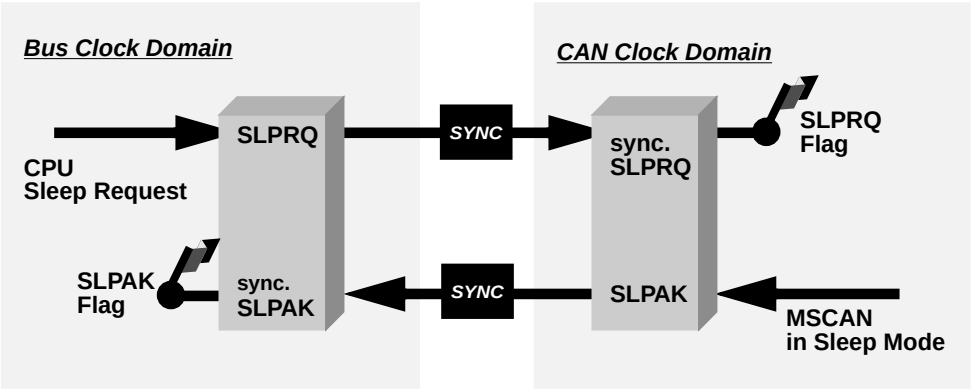

Figure 11-46. Sleep Request / Acknowledge Cycle

NOTE

The application software must avoid setting up a transmission (by clearing one or more TXEx flag(s)) and immediately request sleep mode (by setting SLPRQ). Whether the MSCAN starts transmitting or goes into sleep mode directly depends on the exact sequence of operations.

If sleep mode is active, the SLPRQ and SLPAK bits are set (Figure 11-46). The application software must use SLPAK as a handshake indication for the request (SLPRQ) to go into sleep mode.

When in sleep mode (SLPRQ = 1 and SLPAK = 1), the MSCAN stops its internal clocks. However, clocks that allow register accesses from the CPU side continue to run.

If the MSCAN is in bus-off state, it stops counting the 128 occurrences of 11 consecutive recessive bits due to the stopped clocks. TXCAN remains in a recessive state. If RXF = 1, the message can be read and RXF can be cleared. Shifting a new message into the foreground buffer of the receiver FIFO (RxFG) does not take place while in sleep mode.

It is possible to access the transmit buffers and to clear the associated TXE flags. No message abort takes place while in sleep mode.

If the WUPE bit in CANCTL0 is not asserted, the MSCAN will mask any activity it detects on CAN. RXCAN is therefore held internally in a recessive state. This locks the MSCAN in sleep mode. WUPE must be set before entering sleep mode to take effect.

The MSCAN is able to leave sleep mode (wake up) only when:

- CAN bus activity occurs and WUPE = 1

  or
- the CPU clears the SLPRQ bit

NOTE

The CPU cannot clear the SLPRQ bit before sleep mode (SLPRQ = 1 and SLPAK = 1) is active.

After wake-up, the MSCAN waits for 11 consecutive recessive bits to synchronize to the CAN bus. As a consequence, if the MSCAN is woken-up by a CAN frame, this frame is not received.

The receive message buffers (RxFG and RxBG) contain messages if they were received before sleep mode was entered. All pending actions will be executed upon wake-up; copying of RxBG into RxFG, message aborts and message transmissions. If the MSCAN remains in bus-off state after sleep mode was exited, it continues counting the 128 occurrences of 11 consecutive recessive bits.

11.4.5.6 MSCAN Power Down Mode

The MSCAN is in power down mode (Table 11-38) when

- CPU is in stop mode

  or
- CPU is in wait mode and the CSWAI bit is set

When entering the power down mode, the MSCAN immediately stops all ongoing transmissions and receptions, potentially causing CAN protocol violations. To protect the CAN bus system from fatal consequences of violations to the above rule, the MSCAN immediately drives TXCAN into a recessive state.

NOTE

The user is responsible for ensuring that the MSCAN is not active when power down mode is entered. The recommended procedure is to bring the MSCAN into Sleep mode before the STOP or WAI instruction (if CSWAI is set) is executed. Otherwise, the abort of an ongoing message can cause an error condition and impact other CAN bus devices.

In power down mode, all clocks are stopped and no registers can be accessed. If the MSCAN was not in sleep mode before power down mode became active, the module performs an internal recovery cycle after powering up. This causes some fixed delay before the module enters normal mode again.

11.4.5.7 Disabled Mode

The MSCAN is in disabled mode out of reset (CANE=0). All module clocks are stopped for power saving, however the register map can still be accessed as specified.

11.4.5.8 Programmable Wake-Up Function

The MSCAN can be programmed to wake up from sleep or power down mode as soon as CAN bus activity is detected (see control bit WUPE in MSCAN Control Register 0 (CANCTL0). The sensitivity to existing CAN bus action can be modified by applying a low-pass filter function to the RXCAN input line (see control bit WUPM in Section 11.3.2.2, "MSCAN Control Register 1 (CANCTL1)").

This feature can be used to protect the MSCAN from wake-up due to short glitches on the CAN bus lines. Such glitches can result from—for example—electromagnetic interference within noisy environments.

11.4.6 Reset Initialization

The reset state of each individual bit is listed in Section 11.3.2, "Register Descriptions," which details all the registers and their bit-fields.

11.4.7 Interrupts

This section describes all interrupts originated by the MSCAN. It documents the enable bits and generated flags. Each interrupt is listed and described separately.

11.4.7.1 Description of Interrupt Operation

The MSCAN supports four interrupt vectors (see Table 11-39), any of which can be individually masked (for details see Section 11.3.2.6, "MSCAN Receiver Interrupt Enable Register (CANRIER)" to Section 11.3.2.8, "MSCAN Transmitter Interrupt Enable Register (CANTIER)").

Refer to the device overview section to determine the dedicated interrupt vector addresses.

Table 11-39. Interrupt Vectors

Interrupt Source	CCR Mask	Local Enable
Wake-Up Interrupt (WUPIF)	I bit	CANRIER (WUPIE)
Error Interrupts Interrupt (CSCIF, OVRIF)	I bit	CANRIER (CSCIE, OVRIE)
Receive Interrupt (RXF)	I bit	CANRIER (RXFIE)
Transmit Interrupts (TXE[2:0])	I bit	CANTIER (TXEIE[2:0])

11.4.7.2 Transmit Interrupt

At least one of the three transmit buffers is empty (not scheduled) and can be loaded to schedule a message for transmission. The TXEx flag of the empty message buffer is set.

11.4.7.3 Receive Interrupt

A message is successfully received and shifted into the foreground buffer (RxFG) of the receiver FIFO. This interrupt is generated immediately after receiving the EOF symbol. The RXF flag is set. If there are multiple messages in the receiver FIFO, the RXF flag is set as soon as the next message is shifted to the foreground buffer.

11.4.7.4 Wake-Up Interrupt

A wake-up interrupt is generated if activity on the CAN bus occurs during MSCAN sleep or power-down mode.

NOTE

This interrupt can only occur if the MSCAN was in sleep mode (SLPRQ = 1 and SLPAK = 1) before entering power down mode, the wake-up option is enabled (WUPE = 1), and the wake-up interrupt is enabled (WUPIE = 1).

11.4.7.5 Error Interrupt

An error interrupt is generated if an overrun of the receiver FIFO, error, warning, or bus-off condition occurrs. MSCAN Receiver Flag Register (CANRFLG) indicates one of the following conditions:

- **Overrun** — An overrun condition of the receiver FIFO as described in Section 11.4.2.3, "Receive Structures," occurred.
- **CAN Status Change** — The actual value of the transmit and receive error counters control the CAN bus state of the MSCAN. As soon as the error counters skip into a critical range (Tx/Rx-warning, Tx/Rx-error, bus-off) the MSCAN flags an error condition. The status change, which caused the error condition, is indicated by the TSTAT and RSTAT flags (see Section 11.3.2.5, "MSCAN Receiver Flag Register (CANRFLG)" and Section 11.3.2.6, "MSCAN Receiver Interrupt Enable Register (CANRIER)").

11.4.7.6 Interrupt Acknowledge

Interrupts are directly associated with one or more status flags in either the MSCAN Receiver Flag Register (CANRFLG) or the MSCAN Transmitter Flag Register (CANTFLG). Interrupts are pending as long as one of the corresponding flags is set. The flags in CANRFLG and CANTFLG must be reset within the interrupt handler to handshake the interrupt. The flags are reset by writing a 1 to the corresponding bit position. A flag cannot be cleared if the respective condition prevails.

NOTE

It must be guaranteed that the CPU clears only the bit causing the current interrupt. For this reason, bit manipulation instructions (BSET) must not be used to clear interrupt flags. These instructions may cause accidental clearing of interrupt flags which are set after entering the current interrupt service routine.

11.5 Initialization/Application Information

11.5.1 MSCAN initialization

The procedure to initially start up the MSCAN module out of reset is as follows:

1. Assert CANE
2. Write to the configuration registers in initialization mode
3. Clear INITRQ to leave initialization mode

If the configuration of registers which are only writable in initialization mode shall be changed:

1. Bring the module into sleep mode by setting SLPRQ and awaiting SLPAK to assert after the CAN bus becomes idle.
2. Enter initialization mode: assert INITRQ and await INITAK
3. Write to the configuration registers in initialization mode
4. Clear INITRQ to leave initialization mode and continue

11.5.2 Bus-Off Recovery

The bus-off recovery is user configurable. The bus-off state can either be left automatically or on user request.

For reasons of backwards compatibility, the MSCAN defaults to automatic recovery after reset. In this case, the MSCAN will become error active again after counting 128 occurrences of 11 consecutive recessive bits on the CAN bus (see the Bosch CAN 2.0 A/B specification for details).

If the MSCAN is configured for user request (BORM set in MSCAN Control Register 1 (CANCTL1)), the recovery from bus-off starts after both independent events have become true:

- 128 occurrences of 11 consecutive recessive bits on the CAN bus have been monitored
- BOHOLD in MSCAN Miscellaneous Register (CANMISC) has been cleared by the user

These two events may occur in any order.

Chapter 12
Periodic Interrupt Timer (S12PIT24B4CV1)

Table 12-1. Revision History

Version Number	Revision Date	Effective Date	Author	Description of Changes
01.00	28-Apr-05	28-Apr-05		Initial Release
01.01	05-Jul-05	05-Jul-05		Added application section, removed table 1-1

12.1 Introduction

The period interrupt timer (PIT) is an array of 24-bit timers that can be used to trigger peripheral modules or raise periodic interrupts. Refer to Figure 12-1 for a simplified block diagram.

12.1.1 Glossary

Acronyms and Abbreviations	
PIT	Periodic Interrupt Timer
ISR	Interrupt Service Routine
CCR	Condition Code Register
SoC	System on Chip
micro time bases	clock periods of the 16-bit timer modulus down-counters, which are generated by the 8-bit modulus down-counters.

12.1.2 Features

The PIT includes these features:

- Four timers implemented as modulus down-counters with independent time-out periods.
- Time-out periods selectable between 1 and 2^{24} bus clock cycles. Time-out equals m*n bus clock cycles with 1 <= m <= 256 and 1 <= n <= 65536.
- Timers that can be enabled individually.
- Four time-out interrupts.
- Four time-out trigger output signals available to trigger peripheral modules.
- Start of timer channels can be aligned to each other.

12.1.3 Modes of Operation

Refer to the SoC guide for a detailed explanation of the chip modes.

- Run mode

  This is the basic mode of operation.
- Wait mode

  PIT operation in wait mode is controlled by the PITSWAI bit located in the PITCFLMT register. In wait mode, if the bus clock is globally enabled and if the PITSWAI bit is clear, the PIT operates like in run mode. In wait mode, if the PITSWAI bit is set, the PIT module is stalled.
- Stop mode

  In full stop mode or pseudo stop mode, the PIT module is stalled.
- Freeze mode

  PIT operation in freeze mode is controlled by the PITFRZ bit located in the PITCFLMT register. In freeze mode, if the PITFRZ bit is clear, the PIT operates like in run mode. In freeze mode, if the PITFRZ bit is set, the PIT module is stalled.

12.1.4 Block Diagram

Figure 12-1 shows a block diagram of the PIT module.

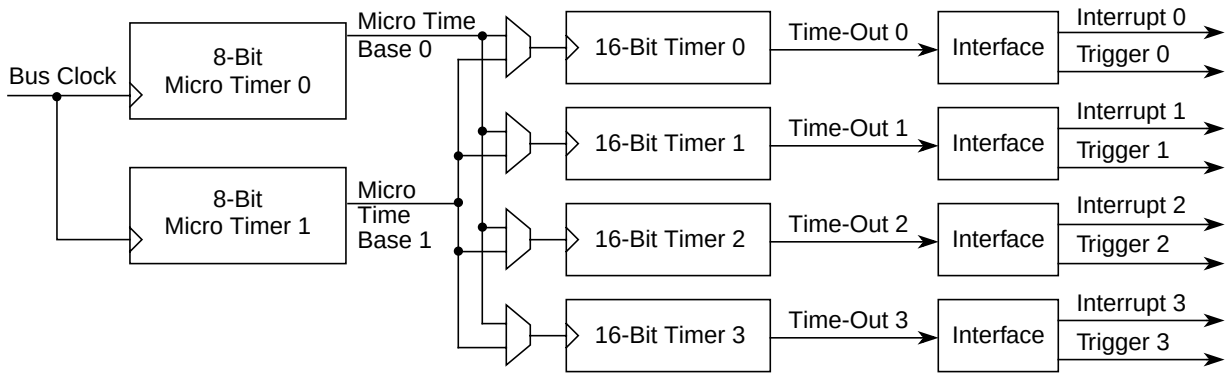

Figure 12-1. PIT24B4C Block Diagram

12.2 External Signal Description

The PIT module has no external pins.

12.3 Register Definition

This section consists of register descriptions in address order of the PIT. Each description includes a standard register diagram with an associated figure number. Details of register bit and field function follow the register diagrams, in bit order.

Register Name		Bit 7	6	5	4	3	2	1	Bit 0
0x0000 PITCFLMT	R	PITE	PITSWAI	PITFRZ	0	0	0	0	0
	W							PFLMT1	PFLMT0
0x0001 PITFLT	R	0	0	0	0	0	0	0	0
	W					PFLT3	PFLT2	PFLT1	PFLT0
0x0002 PITCE	R	0	0	0	0	PCE3	PCE2	PCE1	PCE0
	W								
0x0003 PITMUX	R	0	0	0	0	PMUX3	PMUX2	PMUX1	PMUX0
	W								
0x0004 PITINTE	R	0	0	0	0	PINTE3	PINTE2	PINTE1	PINTE0
	W								
0x0005 PITTF	R	0	0	0	0	PTF3	PTF2	PTF1	PTF0
	W								
0x0006 PITMTLD0	R/W	PMTLD7	PMTLD6	PMTLD5	PMTLD4	PMTLD3	PMTLD2	PMTLD1	PMTLD0
0x0007 PITMTLD1	R/W	PMTLD7	PMTLD6	PMTLD5	PMTLD4	PMTLD3	PMTLD2	PMTLD1	PMTLD0
0x0008 PITLD0 (High)	R/W	PLD15	PLD14	PLD13	PLD12	PLD11	PLD10	PLD9	PLD8
0x0009 PITLD0 (Low)	R/W	PLD7	PLD6	PLD5	PLD4	PLD3	PLD2	PLD1	PLD0
0x000A PITCNT0 (High)	R/W	PCNT15	PCNT14	PCNT13	PCNT12	PCNT11	PCNT10	PCNT9	PCNT8
0x000B PITCNT0 (Low)	R/W	PCNT7	PCNT6	PCNT5	PCNT4	PCNT3	PCNT2	PCNT1	PCNT0
0x000C PITLD1 (High)	R/W	PLD15	PLD14	PLD13	PLD12	PLD11	PLD10	PLD9	PLD8

= Unimplemented or Reserved

Figure 12-2. PIT Register Summary (Sheet 1 of 2)

Register Name		Bit 7	6	5	4	3	2	1	Bit 0
0x000D PITLD1 (Low)	R/W	PLD7	PLD6	PLD5	PLD4	PLD3	PLD2	PLD1	PLD0
0x000E PITCNT1 (High)	R/W	PCNT15	PCNT14	PCNT13	PCNT12	PCNT11	PCNT10	PCNT9	PCNT8
0x000F PITCNT1 (Low)	R/W	PCNT7	PCNT6	PCNT5	PCNT4	PCNT3	PCNT2	PCNT1	PCNT0
0x0010 PITLD2 (High)	R/W	PLD15	PLD14	PLD13	PLD12	PLD11	PLD10	PLD9	PLD8
0x0011 PITLD2 (Low)	R/W	PLD7	PLD6	PLD5	PLD4	PLD3	PLD2	PLD1	PLD0
0x0012 PITCNT2 (High)	R/W	PCNT15	PCNT14	PCNT13	PCNT12	PCNT11	PCNT10	PCNT9	PCNT8
0x0013 PITCNT2 (Low)	R/W	PCNT7	PCNT6	PCNT5	PCNT4	PCNT3	PCNT2	PCNT1	PCNT0
0x0014 PITLD3 (High)	R/W	PLD15	PLD14	PLD13	PLD12	PLD11	PLD10	PLD9	PLD8
0x0015 PITLD3 (Low)	R/W	PLD7	PLD6	PLD5	PLD4	PLD3	PLD2	PLD1	PLD0
0x0016 PITCNT3 (High)	R/W	PCNT15	PCNT14	PCNT13	PCNT12	PCNT11	PCNT10	PCNT9	PCNT8
0x0017 PITCNT3 (Low)	R/W	PCNT7	PCNT6	PCNT5	PCNT4	PCNT3	PCNT2	PCNT1	PCNT0
0x0018–0x0027 RESERVED	R	0	0	0	0	0	0	0	0
	W								

= Unimplemented or Reserved

Figure 12-2. PIT Register Summary (Sheet 2 of 2)

12.3.0.1 PIT Control and Force Load Micro Timer Register (PITCFLMT)

Module Base + 0x0000

	7	6	5	4	3	2	1	0
R	PITE	PITSWAI	PITFRZ	0	0	0	0	0
W							PFLMT1	PFLMT0
Reset	0	0	0	0	0	0	0	0

= Unimplemented or Reserved

Figure 12-3. PIT Control and Force Load Micro Timer Register (PITCFLMT)

Read: Anytime

Write: Anytime; writes to the reserved bits have no effect

Table 12-2. PITCFLMT Field Descriptions

Field	Description
7 PITE	**PIT Module Enable Bit** — This bit enables the PIT module. If PITE is cleared, the PIT module is disabled and flag bits in the PITTF register are cleared. When PITE is set, individually enabled timers (PCE set) start down-counting with the corresponding load register values. 0 PIT disabled (lower power consumption). 1 PIT is enabled.
6 PITSWAI	**PIT Stop in Wait Mode Bit** — This bit is used for power conservation while in wait mode. 0 PIT operates normally in wait mode 1 PIT clock generation stops and freezes the PIT module when in wait mode
5 PITFRZ	**PIT Counter Freeze while in Freeze Mode Bit** — When during debugging a breakpoint (freeze mode) is encountered it is useful in many cases to freeze the PIT counters to avoid e.g. interrupt generation. The PITFRZ bit controls the PIT operation while in freeze mode. 0 PIT operates normally in freeze mode 1 PIT counters are stalled when in freeze mode
1:0 PFLMT[1:0]	**PIT Force Load Bits for Micro Timer 1:0** — These bits have only an effect if the corresponding micro timer is active and if the PIT module is enabled (PITE set). Writing a one into a PFLMT bit loads the corresponding 8-bit micro timer load register into the 8-bit micro timer down-counter. Writing a zero has no effect. Reading these bits will always return zero. **Note:** A micro timer force load affects all timer channels that use the corresponding micro time base.

12.3.0.2 PIT Force Load Timer Register (PITFLT)

Module Base + 0x0001

	7	6	5	4	3	2	1	0
R	0	0	0	0	0	0	0	0
W					PFLT3	PFLT2	PFLT1	PFLT0
Reset	0	0	0	0	0	0	0	0

Figure 12-4. PIT Force Load Timer Register (PITFLT)

Read: Anytime

Write: Anytime

Table 12-3. PITFLT Field Descriptions

Field	Description
3:0 PFLT[3:0]	**PIT Force Load Bits for Timer 3-0** — These bits have only an effect if the corresponding timer channel (PCE set) is enabled and if the PIT module is enabled (PITE set). Writing a one into a PFLT bit loads the corresponding 16-bit timer load register into the 16-bit timer down-counter. Writing a zero has no effect. Reading these bits will always return zero.

12.3.0.3 PIT Channel Enable Register (PITCE)

Module Base + 0x0002

	7	6	5	4	3	2	1	0
R	0	0	0	0	PCE3	PCE2	PCE1	PCE0
W								
Reset	0	0	0	0	0	0	0	0

Figure 12-5. PIT Channel Enable Register (PITCE)

Read: Anytime

Write: Anytime

Table 12-4. PITCE Field Descriptions

Field	Description
3:0 PCE[3:0]	**PIT Enable Bits for Timer Channel 3:0** — These bits enable the PIT channels 3-0. If PCE is cleared, the PIT channel is disabled and the corresponding flag bit in the PITTF register is cleared. When PCE is set, and if the PIT module is enabled (PITE = 1) the 16-bit timer counter is loaded with the start count value and starts down-counting. 0 The corresponding PIT channel is disabled. 1 The corresponding PIT channel is enabled.

12.3.0.4 PIT Multiplex Register (PITMUX)

Module Base + 0x0003

	7	6	5	4	3	2	1	0
R	0	0	0	0	PMUX3	PMUX2	PMUX1	PMUX0
W								
Reset	0	0	0	0	0	0	0	0

Figure 12-6. PIT Multiplex Register (PITMUX)

Read: Anytime

Write: Anytime

Table 12-5. PITMUX Field Descriptions

Field	Description
3:0 PMUX[3:0]	**PIT Multiplex Bits for Timer Channel 3:0** — These bits select if the corresponding 16-bit timer is connected to micro time base 1 or 0. If PMUX is modified, the corresponding 16-bit timer is switched to the other micro time base immediately. 0 The corresponding 16-bit timer counts with micro time base 0. 1 The corresponding 16-bit timer counts with micro time base 1.

12.3.0.5 PIT Interrupt Enable Register (PITINTE)

Module Base + 0x0004

	7	6	5	4	3	2	1	0
R	0	0	0	0	PINTE3	PINTE2	PINTE1	PINTE0
W								
Reset	0	0	0	0	0	0	0	0

Figure 12-7. PIT Interrupt Enable Register (PITINTE)

Read: Anytime

Write: Anytime

Table 12-6. PITINTE Field Descriptions

Field	Description
3:0 PINTE[3:0]	**PIT Time-out Interrupt Enable Bits for Timer Channel 3:0** — These bits enable an interrupt service request whenever the time-out flag PTF of the corresponding PIT channel is set. When an interrupt is pending (PTF set) enabling the interrupt will immediately cause an interrupt. To avoid this, the corresponding PTF flag has to be cleared first. 0 Interrupt of the corresponding PIT channel is disabled. 1 Interrupt of the corresponding PIT channel is enabled.

12.3.0.6 PIT Time-Out Flag Register (PITTF)

Module Base + 0x0005

	7	6	5	4	3	2	1	0
R	0	0	0	0	PTF3	PTF2	PTF1	PTF0
W								
Reset	0	0	0	0	0	0	0	0

Figure 12-8. PIT Time-Out Flag Register (PITTF)

Read: Anytime

Write: Anytime (write to clear)

Table 12-7. PITTF Field Descriptions

Field	Description
3:0 PTF[3:0]	**PIT Time-out Flag Bits for Timer Channel 3:0** — PTF is set when the corresponding 16-bit timer modulus down-counter and the selected 8-bit micro timer modulus down-counter have counted to zero. The flag can be cleared by writing a one to the flag bit. Writing a zero has no effect. If flag clearing by writing a one and flag setting happen in the same bus clock cycle, the flag remains set. The flag bits are cleared if the PIT module is disabled or if the corresponding timer channel is disabled. 0 Time-out of the corresponding PIT channel has not yet occurred. 1 Time-out of the corresponding PIT channel has occurred.

12.3.0.7 PIT Micro Timer Load Register 0 to 1 (PITMTLD0–1)

Module Base + 0x0006

	7	6	5	4	3	2	1	0
R W	PMTLD7	PMTLD6	PMTLD5	PMTLD4	PMTLD3	PMTLD2	PMTLD1	PMTLD0
Reset	0	0	0	0	0	0	0	0

Figure 12-9. PIT Micro Timer Load Register 0 (PITMTLD0)

Module Base + 0x0007

	7	6	5	4	3	2	1	0
R W	PMTLD7	PMTLD6	PMTLD5	PMTLD4	PMTLD3	PMTLD2	PMTLD1	PMTLD0
Reset	0	0	0	0	0	0	0	0

Figure 12-10. PIT Micro Timer Load Register 1 (PITMTLD1)

Read: Anytime

Write: Anytime

Table 12-8. PITMTLD0–1 Field Descriptions

Field	Description
7:0 PMTLD[7:0]	**PIT Micro Timer Load Bits 7:0** — These bits set the 8-bit modulus down-counter load value of the micro timers. Writing a new value into the PITMTLD register will not restart the timer. When the micro timer has counted down to zero, the PMTLD register value will be loaded. The PFLMT bits in the PITCFLMT register can be used to immediately update the count register with the new value if an immediate load is desired.

12.3.0.8 PIT Load Register 0 to 3 (PITLD0–3)

Module Base + 0x0008, 0x0009

	15	14	13	12	11	10	9	8	7	6	5	4	3	2	1	0
R/W	PLD15	PLD14	PLD13	PLD12	PLD11	PLD10	PLD9	PLD8	PLD7	PLD6	PLD5	PLD4	PLD3	PLD2	PLD1	PLD0
Reset	0	0	0	0	0	0	0	0	0	0	0	0	0	0	0	0

Figure 12-11. PIT Load Register 0 (PITLD0)

Module Base + 0x000C, 0x000D

	15	14	13	12	11	10	9	8	7	6	5	4	3	2	1	0
R/W	PLD15	PLD14	PLD13	PLD12	PLD11	PLD10	PLD9	PLD8	PLD7	PLD6	PLD5	PLD4	PLD3	PLD2	PLD1	PLD0
Reset	0	0	0	0	0	0	0	0	0	0	0	0	0	0	0	0

Figure 12-12. PIT Load Register 1 (PITLD1)

Module Base + 0x0010, 0x0011

	15	14	13	12	11	10	9	8	7	6	5	4	3	2	1	0
R/W	PLD15	PLD14	PLD13	PLD12	PLD11	PLD10	PLD9	PLD8	PLD7	PLD6	PLD5	PLD4	PLD3	PLD2	PLD1	PLD0
Reset	0	0	0	0	0	0	0	0	0	0	0	0	0	0	0	0

Figure 12-13. PIT Load Register 2 (PITLD2)

Module Base + 0x0014, 0x0015

	15	14	13	12	11	10	9	8	7	6	5	4	3	2	1	0
R/W	PLD15	PLD14	PLD13	PLD12	PLD11	PLD10	PLD9	PLD8	PLD7	PLD6	PLD5	PLD4	PLD3	PLD2	PLD1	PLD0
Reset	0	0	0	0	0	0	0	0	0	0	0	0	0	0	0	0

Figure 12-14. PIT Load Register 3 (PITLD3)

Read: Anytime

Write: Anytime

Table 12-9. PITLD0–3 Field Descriptions

Field	Description
15:0 PLD[15:0]	**PIT Load Bits 15:0** — These bits set the 16-bit modulus down-counter load value. Writing a new value into the PITLD register must be a 16-bit access, to ensure data consistency. It will not restart the timer. When the timer has counted down to zero the PTF time-out flag will be set and the register value will be loaded. The PFLT bits in the PITFLT register can be used to immediately update the count register with the new value if an immediate load is desired.

12.3.0.9 PIT Count Register 0 to 3 (PITCNT0–3)

Module Base + 0x000A, 0x000B

	15	14	13	12	11	10	9	8	7	6	5	4	3	2	1	0
R W	PCNT 15	PCNT 14	PCNT 13	PCNT 12	PCNT 11	PCNT 10	PCNT 9	PCNT 8	PCNT 7	PCNT 6	PCNT 5	PCNT 4	PCNT 3	PCNT 2	PCNT 1	PCNT 0
Reset	0	0	0	0	0	0	0	0	0	0	0	0	0	0	0	0

Figure 12-15. PIT Count Register 0 (PITCNT0)

Module Base + 0x000E, 0x000F

	15	14	13	12	11	10	9	8	7	6	5	4	3	2	1	0
R W	PCNT 15	PCNT 14	PCNT 13	PCNT 12	PCNT 11	PCNT 10	PCNT 9	PCNT 8	PCNT 7	PCNT 6	PCNT 5	PCNT 4	PCNT 3	PCNT 2	PCNT 1	PCNT 0
Reset	0	0	0	0	0	0	0	0	0	0	0	0	0	0	0	0

Figure 12-16. PIT Count Register 1 (PITCNT1)

Module Base + 0x0012, 0x0013

	15	14	13	12	11	10	9	8	7	6	5	4	3	2	1	0
R W	PCNT 15	PCNT 14	PCNT 13	PCNT 12	PCNT 11	PCNT 10	PCNT 9	PCNT 8	PCNT 7	PCNT 6	PCNT 5	PCNT 4	PCNT 3	PCNT 2	PCNT 1	PCNT 0
Reset	0	0	0	0	0	0	0	0	0	0	0	0	0	0	0	0

Figure 12-17. PIT Count Register 2 (PITCNT2)

Module Base + 0x0016, 0x0017

	15	14	13	12	11	10	9	8	7	6	5	4	3	2	1	0
R W	PCNT 15	PCNT 14	PCNT 13	PCNT 12	PCNT 11	PCNT 10	PCNT 9	PCNT 8	PCNT 7	PCNT 6	PCNT 5	PCNT 4	PCNT 3	PCNT 2	PCNT 1	PCNT 0
Reset	0	0	0	0	0	0	0	0	0	0	0	0	0	0	0	0

Figure 12-18. PIT Count Register 3 (PITCNT3)

Read: Anytime

Write: Has no meaning or effect

Table 12-10. PITCNT0–3 Field Descriptions

Field	Description
15:0 PCNT[15:0]	**PIT Count Bits 15-0** — These bits represent the current 16-bit modulus down-counter value. The read access for the count register must take place in one clock cycle as a 16-bit access.

12.4 Functional Description

Figure 12-19 shows a detailed block diagram of the PIT module. The main parts of the PIT are status, control and data registers, two 8-bit down-counters, four 16-bit down-counters and an interrupt/trigger interface.

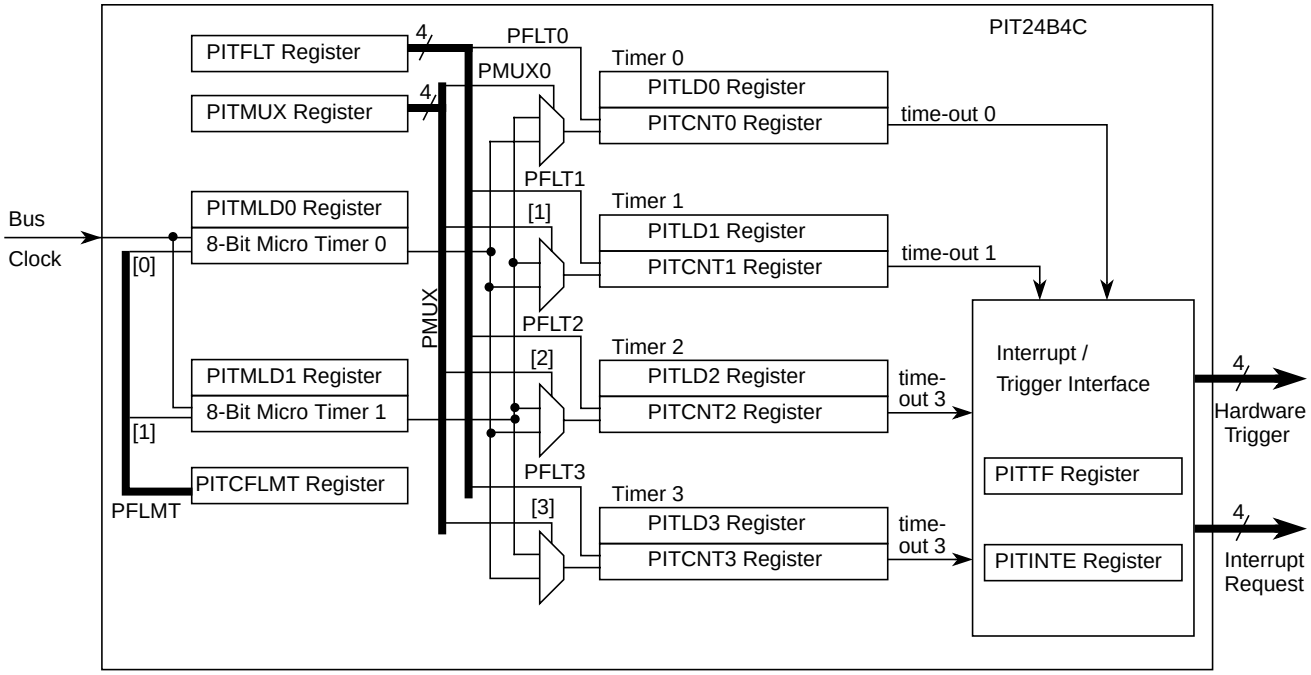

Figure 12-19. PIT24B4C Detailed Block Diagram

12.4.1 Timer

As shown in Figure 12-1 and Figure 12-19, the 24-bit timers are built in a two-stage architecture with four 16-bit modulus down-counters and two 8-bit modulus down-counters. The 16-bit timers are clocked with two selectable micro time bases which are generated with 8-bit modulus down-counters. Each 16-bit timer is connected to micro time base 0 or 1 via the PMUX[3:0] bit setting in the PIT Multiplex (PITMUX) register.

A timer channel is enabled if the module enable bit PITE in the PIT control and force load micro timer (PITCFLMT) register is set and if the corresponding PCE bit in the PIT channel enable (PITCE) register is set. Two 8-bit modulus down-counters are used to generate two micro time bases. As soon as a micro time base is selected for an enabled timer channel, the corresponding micro timer modulus down-counter will load its start value as specified in the PITMTLD0 or PITMTLD1 register and will start down-counting. Whenever the micro timer down-counter has counted to zero the PITMTLD register is reloaded and the connected 16-bit modulus down-counters count one cycle.

Whenever a 16-bit timer counter and the connected 8-bit micro timer counter have counted to zero, the PITLD register is reloaded and the corresponding time-out flag PTF in the PIT time-out flag (PITTF) register is set, as shown in Figure 12-20. The time-out period is a function of the timer load (PITLD) and micro timer load (PITMTLD) registers and the bus clock f_{BUS}:

$$\text{time-out period} = (\text{PITMTLD} + 1) * (\text{PITLD} + 1) / f_{BUS}.$$

For example, for a 40 MHz bus clock, the maximum time-out period equals:

$$256 * 65536 * 25\ \text{ns} = 419.43\ \text{ms}.$$

The current 16-bit modulus down-counter value can be read via the PITCNT register. The micro timer down-counter values cannot be read.

The 8-bit micro timers can individually be restarted by writing a one to the corresponding force load micro timer PFLMT bits in the PIT control and force load micro timer (PITCFLMT) register. The 16-bit timers can individually be restarted by writing a one to the corresponding force load timer PFLT bits in the PIT forceload timer (PITFLT) register. If desired, any group of timers and micro timers can be restarted at the same time by using one 16-bit write to the adjacent PITCFLMT and PITFLT registers with the relevant bits set, as shown in Figure 12-20.

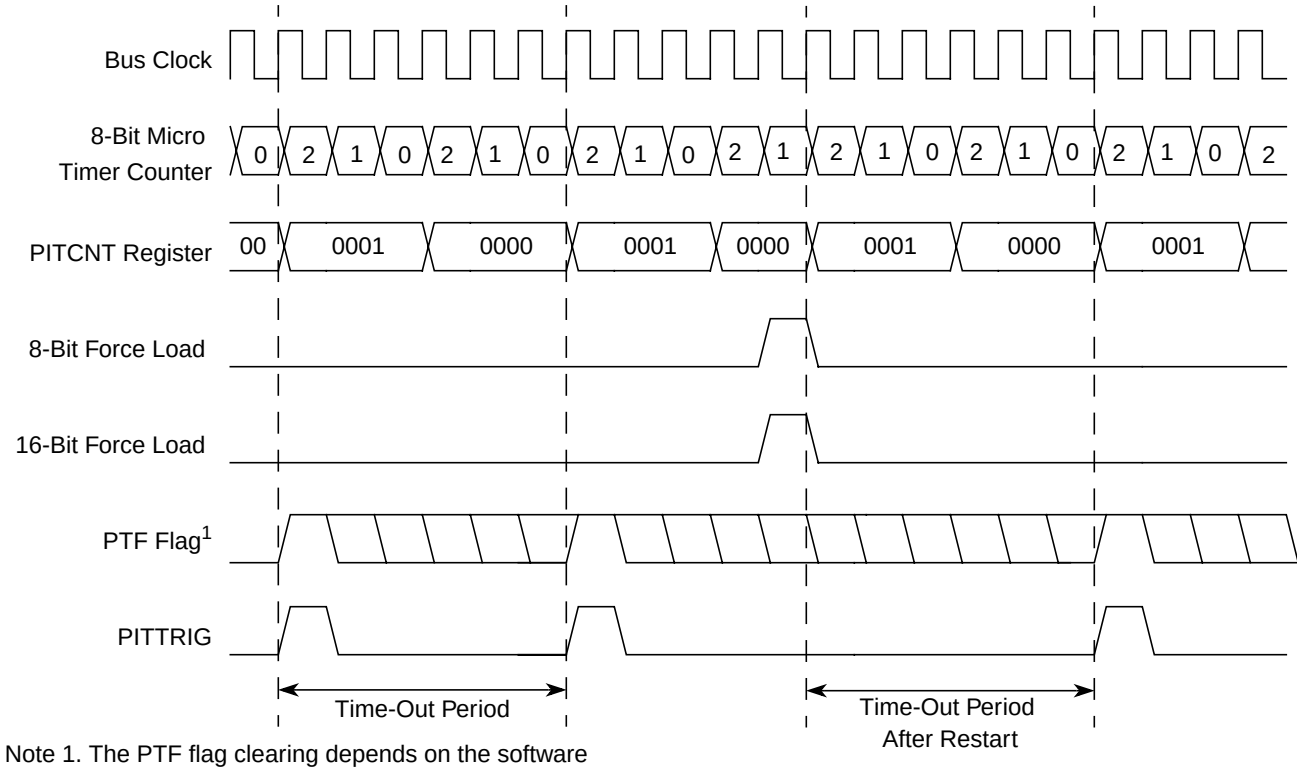

Note 1. The PTF flag clearing depends on the software

Figure 12-20. PIT Trigger and Flag Signal Timing

12.4.2 Interrupt Interface

Each time-out event can be used to trigger an interrupt service request. For each timer channel, an individual bit PINTE in the PIT interrupt enable (PITINTE) register exists to enable this feature. If PINTE

is set, an interrupt service is requested whenever the corresponding time-out flag PTF in the PIT time-out flag (PITTF) register is set. The flag can be cleared by writing a one to the flag bit.

NOTE

Be careful when resetting the PITE, PINTE or PITCE bits in case of pending PIT interrupt requests, to avoid spurious interrupt requests.

12.4.3 Hardware Trigger

The PIT module contains four hardware trigger signal lines PITTRIG[3:0], one for each timer channel. These signals can be connected on SoC level to peripheral modules enabling e.g. periodic ATD conversion (please refer to the SoC Guide for the mapping of PITTRIG[3:0] signals to peripheral modules).

Whenever a timer channel time-out is reached, the corresponding PTF flag is set and the corresponding trigger signal PITTRIG triggers a rising edge. The trigger feature requires a minimum time-out period of two bus clock cycles because the trigger is asserted high for at least one bus clock cycle. For load register values PITLD = 0x0001 and PITMTLD = 0x0002 the flag setting, trigger timing and a restart with force load is shown in Figure 12-20.

12.5 Initialization

12.5.1 Startup

Set the configuration registers before the PITE bit in the PITCFLMT register is set. Before PITE is set, the configuration registers can be written in arbitrary order.

12.5.2 Shutdown

When the PITCE register bits, the PITINTE register bits or the PITE bit in the PITCFLMT register are cleared, the corresponding PIT interrupt flags are cleared. In case of a pending PIT interrupt request, a spurious interrupt can be generated. Two strategies, which avoid spurious interrupts, are recommended:

1. Reset the PIT interrupt flags only in an ISR. When entering the ISR, the I mask bit in the CCR is set automatically. The I mask bit must not be cleared before the PIT interrupt flags are cleared.
2. After setting the I mask bit with the SEI instruction, the PIT interrupt flags can be cleared. Then clear the I mask bit with the CLI instruction to re-enable interrupts.

12.5.3 Flag Clearing

A flag is cleared by writing a one to the flag bit. Always use store or move instructions to write a one in certain bit positions. Do not use the BSET instructions. Do not use any C-constructs that compile to BSET instructions. “BSET flag_register, #mask” must not be used for flag clearing because BSET is a read-modify-write instruction which writes back the “bit-wise or” of the flag_register and the mask into the flag_register. BSET would clear all flag bits that were set, independent from the mask.

For example, to clear flag bit 0 use: MOVB #$01,PITTF.

12.6 Application Information

To get started quickly with the PIT24B8C module this section provides a small code example how to use the block. Please note that the example provided is only one specific case out of the possible configurations and implementations.

Functionality: Generate an PIT interrupt on channel 0 every 500 PIT clock cycles.

```
                ORG     CODESTART               ; place the program into specific
                                                ; range (to be selected)
                LDS     RAMEND                  ; load stack pointer to top of RAM
                MOVW    #CH0_ISR,VEC_PIT_CH0    ; Change value of channel 0 ISR adr

; ******************* Start PIT Initialization ****************************************************

                CLR     PITCFLMT                ; disable PIT
                MOVB    #$01,PITCE              ; enable timer channel 0
                CLR     PITMUX                  ; ch0 connected to micro timer 0
                MOVB    #$63,PITMTLD0           ; micro time base 0 equals 100 clock cycles
                MOVW    #$0004,PITLD0           ; time base 0 eq. 5 micro time bases 0 =5*100 = 500
                MOVB    #$01,PITINTE            ; enable interupt channel 0
                MOVB    #$80,PITCFLMT           ; enable PIT
                CLI                             ; clear Interupt disable Mask bit

;******************* Main Program ***************************************************************

MAIN:           BRA *                           ; loop until interrupt

;******************* Channel 0 Interupt Routine *************************************************

CH0_ISR:        LDAA    PITTF                   ; 8 bit read of PIT time out flags
                MOVB    #$01,PITTF              ; clear PIT channel 0 time out flag
                RTI                             ; return to MAIN
```

Chapter 13
Pulse-Width Modulator (S12PWM8B8CV1)

Version Number	Revision Date	Effective Date	Author	Description of Changes
01.17		08-01-2004		Added clarification of PWMIF operation in STOP and WAIT mode. Added notes on minimum pulse width of emergency shutdown signal.

13.1 Introduction

The PWM definition is based on the HC12 PWM definitions. It contains the basic features from the HC11 with some of the enhancements incorporated on the HC12: center aligned output mode and four available clock sources.The PWM module has eight channels with independent control of left and center aligned outputs on each channel.

Each of the eight channels has a programmable period and duty cycle as well as a dedicated counter. A flexible clock select scheme allows a total of four different clock sources to be used with the counters. Each of the modulators can create independent continuous waveforms with software-selectable duty rates from 0% to 100%. The PWM outputs can be programmed as left aligned outputs or center aligned outputs.

13.1.1 Features

The PWM block includes these distinctive features:

- Eight independent PWM channels with programmable period and duty cycle
- Dedicated counter for each PWM channel
- Programmable PWM enable/disable for each channel
- Software selection of PWM duty pulse polarity for each channel
- Period and duty cycle are double buffered. Change takes effect when the end of the effective period is reached (PWM counter reaches zero) or when the channel is disabled.
- Programmable center or left aligned outputs on individual channels
- Eight 8-bit channel or four 16-bit channel PWM resolution
- Four clock sources (A, B, SA, and SB) provide for a wide range of frequencies
- Programmable clock select logic
- Emergency shutdown

13.1.2 Modes of Operation

There is a software programmable option for low power consumption in wait mode that disables the input clock to the prescaler.

In freeze mode there is a software programmable option to disable the input clock to the prescaler. This is useful for emulation.

13.1.3 Block Diagram

Figure 13-1 shows the block diagram for the 8-bit 8-channel PWM block.

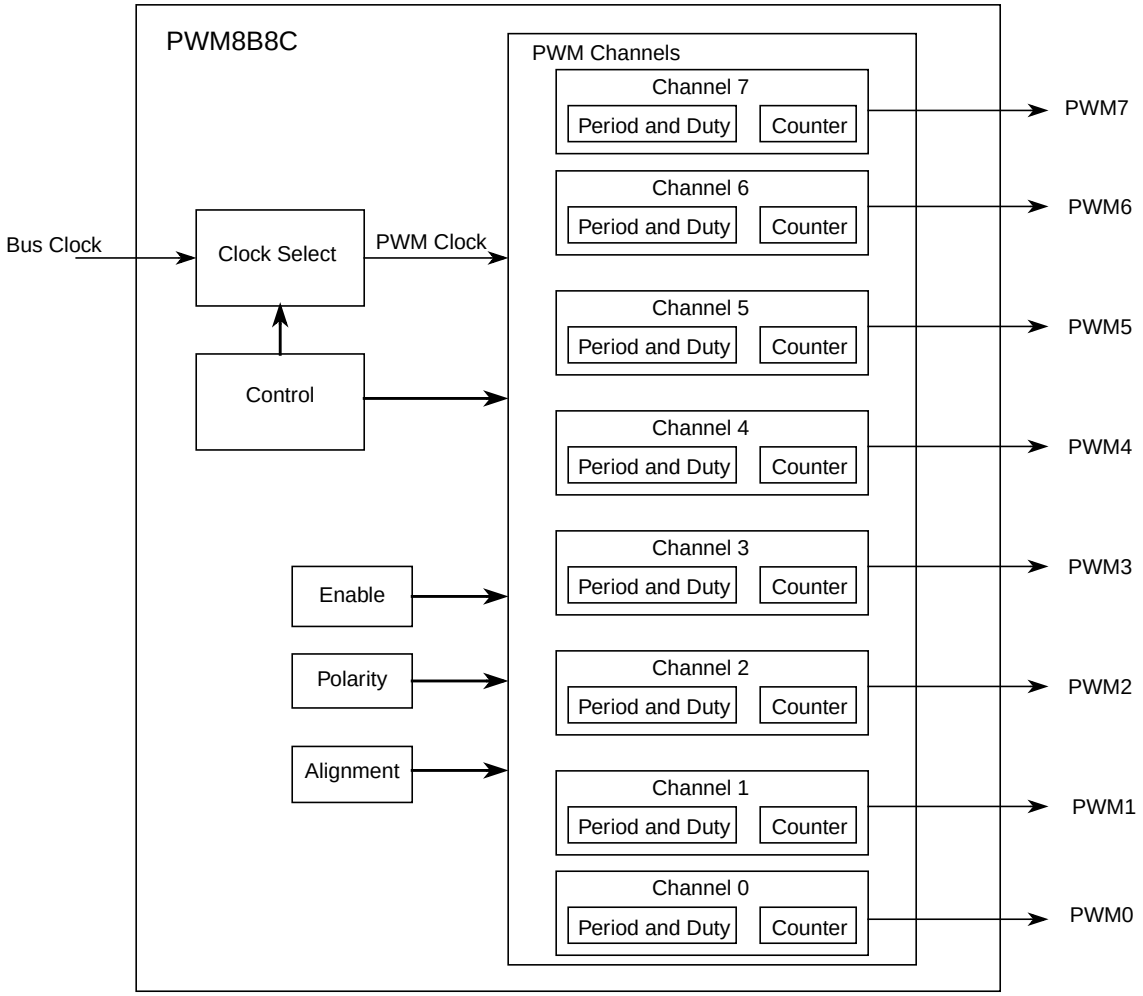

Figure 13-1. PWM Block Diagram

13.2 External Signal Description

The PWM module has a total of 8 external pins.

13.2.1 PWM7 — PWM Channel 7

This pin serves as waveform output of PWM channel 7 and as an input for the emergency shutdown feature.

13.2.2 PWM6 — PWM Channel 6

This pin serves as waveform output of PWM channel 6.

13.2.3 PWM5 — PWM Channel 5

This pin serves as waveform output of PWM channel 5.

13.2.4 PWM4 — PWM Channel 4

This pin serves as waveform output of PWM channel 4.

13.2.5 PWM3 — PWM Channel 3

This pin serves as waveform output of PWM channel 3.

13.2.6 PWM3 — PWM Channel 2

This pin serves as waveform output of PWM channel 2.

13.2.7 PWM3 — PWM Channel 1

This pin serves as waveform output of PWM channel 1.

13.2.8 PWM3 — PWM Channel 0

This pin serves as waveform output of PWM channel 0.

13.3 Memory Map and Register Definition

This section describes in detail all the registers and register bits in the PWM module.

The special-purpose registers and register bit functions that are not normally available to device end users, such as factory test control registers and reserved registers, are clearly identified by means of shading the appropriate portions of address maps and register diagrams. Notes explaining the reasons for restricting access to the registers and functions are also explained in the individual register descriptions.

13.3.1 Module Memory Map

This section describes the content of the registers in the PWM module. The base address of the PWM module is determined at the MCU level when the MCU is defined. The register decode map is fixed and begins at the first address of the module address offset. The figure below shows the registers associated

with the PWM and their relative offset from the base address. The register detail description follows the order they appear in the register map.

Reserved bits within a register will always read as 0 and the write will be unimplemented. Unimplemented functions are indicated by shading the bit. .

NOTE

Register Address = Base Address + Address Offset, where the Base Address is defined at the MCU level and the Address Offset is defined at the module level.

13.3.2 Register Descriptions

This section describes in detail all the registers and register bits in the PWM module.

Register Name		Bit 7	6	5	4	3	2	1	Bit 0
0x0000 PWME	R/W	PWME7	PWME6	PWME5	PWME4	PWME3	PWME2	PWME1	PWME0
0x0001 PWMPOL	R/W	PPOL7	PPOL6	PPOL5	PPOL4	PPOL3	PPOL2	PPOL1	PPOL0
0x0002 PWMCLK	R/W	PCLK7	PCLKL6	PCLK5	PCLK4	PCLK3	PCLK2	PCLK1	PCLK0
0x0003 PWMPRCLK	R	0	PCKB2	PCKB1	PCKB0	0	PCKA2	PCKA1	PCKA0
	W								
0x0004 PWMCAE	R/W	CAE7	CAE6	CAE5	CAE4	CAE3	CAE2	CAE1	CAE0
0x0005 PWMCTL	R	CON67	CON45	CON23	CON01	PSWAI	PFRZ	0	0
	W								
0x0006 PWMTST[1]	R	0	0	0	0	0	0	0	0
	W								
0x0007 PWMPRSC[1]	R	0	0	0	0	0	0	0	0
	W								
0x0008 PWMSCLA	R/W	Bit 7	6	5	4	3	2	1	Bit 0
0x0009 PWMSCLB	R/W	Bit 7	6	5	4	3	2	1	Bit 0

= Unimplemented or Reserved

Figure 13-2. PWM Register Summary (Sheet 1 of 3)

Register Name		Bit 7	6	5	4	3	2	1	Bit 0
0x000A PWMSCNTA[1]	R	0	0	0	0	0	0	0	0
	W								
0x000B PWMSCNTB[1]	R	0	0	0	0	0	0	0	0
	W								
0x000C PWMCNT0	R	Bit 7	6	5	4	3	2	1	Bit 0
	W	0	0	0	0	0	0	0	0
0x000D PWMCNT1	R	Bit 7	6	5	4	3	2	1	Bit 0
	W	0	0	0	0	0	0	0	0
0x000E PWMCNT2	R	Bit 7	6	5	4	3	2	1	Bit 0
	W	0	0	0	0	0	0	0	0
0x000F PWMCNT3	R	Bit 7	6	5	4	3	2	1	Bit 0
	W	0	0	0	0	0	0	0	0
0x0010 PWMCNT4	R	Bit 7	6	5	4	3	2	1	Bit 0
	W	0	0	0	0	0	0	0	0
0x0011 PWMCNT5	R	Bit 7	6	5	4	3	2	1	Bit 0
	W	0	0	0	0	0	0	0	0
0x0012 PWMCNT6	R	Bit 7	6	5	4	3	2	1	Bit 0
	W	0	0	0	0	0	0	0	0
0x0013 PWMCNT7	R	Bit 7	6	5	4	3	2	1	Bit 0
	W	0	0	0	0	0	0	0	0
0x0014 PWMPER0	R/W	Bit 7	6	5	4	3	2	1	Bit 0
0x0015 PWMPER1	R/W	Bit 7	6	5	4	3	2	1	Bit 0
0x0016 PWMPER2	R/W	Bit 7	6	5	4	3	2	1	Bit 0
0x0017 PWMPER3	R/W	Bit 7	6	5	4	3	2	1	Bit 0
0x0018 PWMPER4	R/W	Bit 7	6	5	4	3	2	1	Bit 0

= Unimplemented or Reserved

Figure 13-2. PWM Register Summary (Sheet 2 of 3)

Register Name		Bit 7	6	5	4	3	2	1	Bit 0
0x0019 PWMPER5	R/W	Bit 7	6	5	4	3	2	1	Bit 0
0x001A PWMPER6	R/W	Bit 7	6	5	4	3	2	1	Bit 0
0x001B PWMPER7	R/W	Bit 7	6	5	4	3	2	1	Bit 0
0x001C PWMDTY0	R/W	Bit 7	6	5	4	3	2	1	Bit 0
0x001D PWMDTY1	R/W	Bit 7	6	5	4	3	2	1	Bit 0
0x001E PWMDTY2	R/W	Bit 7	6	5	4	3	2	1	Bit 0
0x001F PWMDTY3	R/W	Bit 7	6	5	4	3	2	1	Bit 0
0x0010 PWMDTY4	R/W	Bit 7	6	5	4	3	2	1	Bit 0
0x0021 PWMDTY5	R/W	Bit 7	6	5	4	3	2	1	Bit 0
0x0022 PWMDTY6	R/W	Bit 7	6	5	4	3	2	1	Bit 0
0x0023 PWMDTY7	R/W	Bit 7	6	5	4	3	2	1	Bit 0
0x0024 PWMSDN	R	PWMIF	PWMIE	0	PWMLVL	0	PWM7IN	PWM7INL	PWM7ENA
	W			PWMRSTRT					

= Unimplemented or Reserved

Figure 13-2. PWM Register Summary (Sheet 3 of 3)

1 Intended for factory test purposes only.

13.3.2.1 PWM Enable Register (PWME)

Each PWM channel has an enable bit (PWMEx) to start its waveform output. When any of the PWMEx bits are set (PWMEx = 1), the associated PWM output is enabled immediately. However, the actual PWM waveform is not available on the associated PWM output until its clock source begins its next cycle due to the synchronization of PWMEx and the clock source.

NOTE

The first PWM cycle after enabling the channel can be irregular.

An exception to this is when channels are concatenated. Once concatenated mode is enabled (CONxx bits set in PWMCTL register), enabling/disabling the corresponding 16-bit PWM channel is controlled by the low order PWMEx bit.In this case, the high order bytes PWMEx bits have no effect and their corresponding PWM output lines are disabled.

While in run mode, if all eight PWM channels are disabled (PWME7–0 = 0), the prescaler counter shuts off for power savings.

Module Base + 0x0000

	7	6	5	4	3	2	1	0
R W	PWME7	PWME6	PWME5	PWME4	PWME3	PWME2	PWME1	PWME0
Reset	0	0	0	0	0	0	0	0

Figure 13-3. PWM Enable Register (PWME)

Read: Anytime

Write: Anytime

Table 13-1. PWME Field Descriptions

Field	Description
7 PWME7	**Pulse Width Channel 7 Enable** 0 Pulse width channel 7 is disabled. 1 Pulse width channel 7 is enabled. The pulse modulated signal becomes available at PWM output bit 7 when its clock source begins its next cycle.
6 PWME6	**Pulse Width Channel 6 Enable** 0 Pulse width channel 6 is disabled. 1 Pulse width channel 6 is enabled. The pulse modulated signal becomes available at PWM output bit6 when its clock source begins its next cycle. If CON67=1, then bit has no effect and PWM output line 6 is disabled.
5 PWME5	**Pulse Width Channel 5 Enable** 0 Pulse width channel 5 is disabled. 1 Pulse width channel 5 is enabled. The pulse modulated signal becomes available at PWM output bit 5 when its clock source begins its next cycle.
4 PWME4	**Pulse Width Channel 4 Enable** 0 Pulse width channel 4 is disabled. 1 Pulse width channel 4 is enabled. The pulse modulated signal becomes available at PWM, output bit 4 when its clock source begins its next cycle. If CON45 = 1, then bit has no effect and PWM output bit4 is disabled.
3 PWME3	**Pulse Width Channel 3 Enable** 0 Pulse width channel 3 is disabled. 1 Pulse width channel 3 is enabled. The pulse modulated signal becomes available at PWM, output bit 3 when its clock source begins its next cycle.
2 PWME2	**Pulse Width Channel 2 Enable** 0 Pulse width channel 2 is disabled. 1 Pulse width channel 2 is enabled. The pulse modulated signal becomes available at PWM, output bit 2 when its clock source begins its next cycle. If CON23 = 1, then bit has no effect and PWM output bit2 is disabled.

Table 13-1. PWME Field Descriptions (continued)

Field	Description
1 PWME1	**Pulse Width Channel 1 Enable** 0 Pulse width channel 1 is disabled. 1 Pulse width channel 1 is enabled. The pulse modulated signal becomes available at PWM, output bit 1 when its clock source begins its next cycle.
0 PWME0	**Pulse Width Channel 0 Enable** 0 Pulse width channel 0 is disabled. 1 Pulse width channel 0 is enabled. The pulse modulated signal becomes available at PWM, output bit 0 when its clock source begins its next cycle. If CON01 = 1, then bit has no effect and PWM output line0 is disabled.

13.3.2.2 PWM Polarity Register (PWMPOL)

The starting polarity of each PWM channel waveform is determined by the associated PPOLx bit in the PWMPOL register. If the polarity bit is one, the PWM channel output is high at the beginning of the cycle and then goes low when the duty count is reached. Conversely, if the polarity bit is zero, the output starts low and then goes high when the duty count is reached.

Module Base + 0x0001

	7	6	5	4	3	2	1	0
R W	PPOL7	PPOL6	PPOL5	PPOL4	PPOL3	PPOL2	PPOL1	PPOL0
Reset	0	0	0	0	0	0	0	0

Figure 13-4. PWM Polarity Register (PWMPOL)

Read: Anytime

Write: Anytime

NOTE

PPOLx register bits can be written anytime. If the polarity is changed while a PWM signal is being generated, a truncated or stretched pulse can occur during the transition

Table 13-2. PWMPOL Field Descriptions

Field	Description
7–0 PPOL[7:0]	**Pulse Width Channel 7–0 Polarity Bits** 0 PWM channel 7–0 outputs are low at the beginning of the period, then go high when the duty count is reached. 1 PWM channel 7–0 outputs are high at the beginning of the period, then go low when the duty count is reached.

13.3.2.3 PWM Clock Select Register (PWMCLK)

Each PWM channel has a choice of two clocks to use as the clock source for that channel as described below.

Module Base + 0x0002

	7	6	5	4	3	2	1	0
R W	PCLK7	PCLKL6	PCLK5	PCLK4	PCLK3	PCLK2	PCLK1	PCLK0
Reset	0	0	0	0	0	0	0	0

Figure 13-5. PWM Clock Select Register (PWMCLK)

Read: Anytime

Write: Anytime

NOTE

Register bits PCLK0 to PCLK7 can be written anytime. If a clock select is changed while a PWM signal is being generated, a truncated or stretched pulse can occur during the transition.

Table 13-3. PWMCLK Field Descriptions

Field	Description
7 PCLK7	**Pulse Width Channel 7 Clock Select** 0 Clock B is the clock source for PWM channel 7. 1 Clock SB is the clock source for PWM channel 7.
6 PCLK6	**Pulse Width Channel 6 Clock Select** 0 Clock B is the clock source for PWM channel 6. 1 Clock SB is the clock source for PWM channel 6.
5 PCLK5	**Pulse Width Channel 5 Clock Select** 0 Clock A is the clock source for PWM channel 5. 1 Clock SA is the clock source for PWM channel 5.
4 PCLK4	**Pulse Width Channel 4 Clock Select** 0 Clock A is the clock source for PWM channel 4. 1 Clock SA is the clock source for PWM channel 4.
3 PCLK3	**Pulse Width Channel 3 Clock Select** 0 Clock B is the clock source for PWM channel 3. 1 Clock SB is the clock source for PWM channel 3.
2 PCLK2	**Pulse Width Channel 2 Clock Select** 0 Clock B is the clock source for PWM channel 2. 1 Clock SB is the clock source for PWM channel 2.
1 PCLK1	**Pulse Width Channel 1 Clock Select** 0 Clock A is the clock source for PWM channel 1. 1 Clock SA is the clock source for PWM channel 1.
0 PCLK0	**Pulse Width Channel 0 Clock Select** 0 Clock A is the clock source for PWM channel 0. 1 Clock SA is the clock source for PWM channel 0.

13.3.2.4 PWM Prescale Clock Select Register (PWMPRCLK)

This register selects the prescale clock source for clocks A and B independently.

Module Base + 0x0003

	7	6	5	4	3	2	1	0
R	0	PCKB2	PCKB1	PCKB0	0	PCKA2	PCKA1	PCKA0
W								
Reset	0	0	0	0	0	0	0	0

= Unimplemented or Reserved

Figure 13-6. PWM Prescale Clock Select Register (PWMPRCLK)

Read: Anytime

Write: Anytime

NOTE

PCKB2–0 and PCKA2–0 register bits can be written anytime. If the clock pre-scale is changed while a PWM signal is being generated, a truncated or stretched pulse can occur during the transition.

Table 13-4. PWMPRCLK Field Descriptions

Field	Description
6–4 PCKB[2:0]	**Prescaler Select for Clock B** — Clock B is one of two clock sources which can be used for channels 2, 3, 6, or 7. These three bits determine the rate of clock B, as shown in Table 13-5.
2–0 PCKA[2:0]	**Prescaler Select for Clock A** — Clock A is one of two clock sources which can be used for channels 0, 1, 4 or 5. These three bits determine the rate of clock A, as shown in Table 13-6.

Table 13-5. Clock B Prescaler Selects

PCKB2	PCKB1	PCKB0	Value of Clock B
0	0	0	Bus clock
0	0	1	Bus clock / 2
0	1	0	Bus clock / 4
0	1	1	Bus clock / 8
1	0	0	Bus clock / 16
1	0	1	Bus clock / 32
1	1	0	Bus clock / 64
1	1	1	Bus clock / 128

Table 13-6. Clock A Prescaler Selects

PCKA2	PCKA1	PCKA0	Value of Clock A
0	0	0	Bus clock
0	0	1	Bus clock / 2
0	1	0	Bus clock / 4
0	1	1	Bus clock / 8
1	0	0	Bus clock / 16
1	0	1	Bus clock / 32
1	1	0	Bus clock / 64
1	1	1	Bus clock / 128

13.3.2.5 PWM Center Align Enable Register (PWMCAE)

The PWMCAE register contains eight control bits for the selection of center aligned outputs or left aligned outputs for each PWM channel. If the CAEx bit is set to a one, the corresponding PWM output will be center aligned. If the CAEx bit is cleared, the corresponding PWM output will be left aligned. See Section 13.4.2.5, “Left Aligned Outputs” and Section 13.4.2.6, “Center Aligned Outputs” for a more detailed description of the PWM output modes.

Module Base + 0x0004

	7	6	5	4	3	2	1	0
R/W	CAE7	CAE6	CAE5	CAE4	CAE3	CAE2	CAE1	CAE0
Reset	0	0	0	0	0	0	0	0

Figure 13-7. PWM Center Align Enable Register (PWMCAE)

Read: Anytime

Write: Anytime

NOTE

Write these bits only when the corresponding channel is disabled.

Table 13-7. PWMCAE Field Descriptions

Field	Description
7–0 CAE[7:0]	**Center Aligned Output Modes on Channels 7–0** 0 Channels 7–0 operate in left aligned output mode. 1 Channels 7–0 operate in center aligned output mode.

13.3.2.6 PWM Control Register (PWMCTL)

The PWMCTL register provides for various control of the PWM module.

Module Base + 0x0005

	7	6	5	4	3	2	1	0
R	CON67	CON45	CON23	CON01	PSWAI	PFRZ	0	0
W								
Reset	0	0	0	0	0	0	0	0

= Unimplemented or Reserved

Figure 13-8. PWM Control Register (PWMCTL)

Read: Anytime

Write: Anytime

There are three control bits for concatenation, each of which is used to concatenate a pair of PWM channels into one 16-bit channel. When channels 6 and 7are concatenated, channel 6 registers become the high order bytes of the double byte channel. When channels 4 and 5 are concatenated, channel 4 registers become the high order bytes of the double byte channel. When channels 2 and 3 are concatenated, channel

2 registers become the high order bytes of the double byte channel. When channels 0 and 1 are concatenated, channel 0 registers become the high order bytes of the double byte channel.

See Section 13.4.2.7, "PWM 16-Bit Functions" for a more detailed description of the concatenation PWM Function.

NOTE

Change these bits only when both corresponding channels are disabled.

Table 13-8. PWMCTL Field Descriptions

Field	Description
7 CON67	**Concatenate Channels 6 and 7** 0 Channels 6 and 7 are separate 8-bit PWMs. 1 Channels 6 and 7 are concatenated to create one 16-bit PWM channel. Channel 6 becomes the high order byte and channel 7 becomes the low order byte. Channel 7 output pin is used as the output for this 16-bit PWM (bit 7 of port PWMP). Channel 7 clock select control-bit determines the clock source, channel 7 polarity bit determines the polarity, channel 7 enable bit enables the output and channel 7 center aligned enable bit determines the output mode.
6 CON45	**Concatenate Channels 4 and 5** 0 Channels 4 and 5 are separate 8-bit PWMs. 1 Channels 4 and 5 are concatenated to create one 16-bit PWM channel. Channel 4 becomes the high order byte and channel 5 becomes the low order byte. Channel 5 output pin is used as the output for this 16-bit PWM (bit 5 of port PWMP). Channel 5 clock select control-bit determines the clock source, channel 5 polarity bit determines the polarity, channel 5 enable bit enables the output and channel 5 center aligned enable bit determines the output mode.
5 CON23	**Concatenate Channels 2 and 3** 0 Channels 2 and 3 are separate 8-bit PWMs. 1 Channels 2 and 3 are concatenated to create one 16-bit PWM channel. Channel 2 becomes the high order byte and channel 3 becomes the low order byte. Channel 3 output pin is used as the output for this 16-bit PWM (bit 3 of port PWMP). Channel 3 clock select control-bit determines the clock source, channel 3 polarity bit determines the polarity, channel 3 enable bit enables the output and channel 3 center aligned enable bit determines the output mode.
4 CON01	**Concatenate Channels 0 and 1** 0 Channels 0 and 1 are separate 8-bit PWMs. 1 Channels 0 and 1 are concatenated to create one 16-bit PWM channel. Channel 0 becomes the high order byte and channel 1 becomes the low order byte. Channel 1 output pin is used as the output for this 16-bit PWM (bit 1 of port PWMP). Channel 1 clock select control-bit determines the clock source, channel 1 polarity bit determines the polarity, channel 1 enable bit enables the output and channel 1 center aligned enable bit determines the output mode.
3 PSWAI	**PWM Stops in Wait Mode —** Enabling this bit allows for lower power consumption in wait mode by disabling the input clock to the prescaler. 0 Allow the clock to the prescaler to continue while in wait mode. 1 Stop the input clock to the prescaler whenever the MCU is in wait mode.
2 PFREZ	**PWM Counters Stop in Freeze Mode** — In freeze mode, there is an option to disable the input clock to the prescaler by setting the PFRZ bit in the PWMCTL register. If this bit is set, whenever the MCU is in freeze mode, the input clock to the prescaler is disabled. This feature is useful during emulation as it allows the PWM function to be suspended. In this way, the counters of the PWM can be stopped while in freeze mode so that once normal program flow is continued, the counters are re-enabled to simulate real-time operations. Since the registers can still be accessed in this mode, to re-enable the prescaler clock, either disable the PFRZ bit or exit freeze mode. 0 Allow PWM to continue while in freeze mode. 1 Disable PWM input clock to the prescaler whenever the part is in freeze mode. This is useful for emulation.

13.3.2.7 Reserved Register (PWMTST)

This register is reserved for factory testing of the PWM module and is not available in normal modes.

Module Base + 0x0006

	7	6	5	4	3	2	1	0
R	0	0	0	0	0	0	0	0
W								
Reset	0	0	0	0	0	0	0	0

= Unimplemented or Reserved

Figure 13-9. Reserved Register (PWMTST)

Read: Always read $00 in normal modes

Write: Unimplemented in normal modes

NOTE

Writing to this register when in special modes can alter the PWM functionality.

13.3.2.8 Reserved Register (PWMPRSC)

This register is reserved for factory testing of the PWM module and is not available in normal modes.

Module Base + 0x0007

	7	6	5	4	3	2	1	0
R	0	0	0	0	0	0	0	0
W								
Reset	0	0	0	0	0	0	0	0

= Unimplemented or Reserved

Figure 13-10. Reserved Register (PWMPRSC)

Read: Always read $00 in normal modes

Write: Unimplemented in normal modes

NOTE

Writing to this register when in special modes can alter the PWM functionality.

13.3.2.9 PWM Scale A Register (PWMSCLA)

PWMSCLA is the programmable scale value used in scaling clock A to generate clock SA. Clock SA is generated by taking clock A, dividing it by the value in the PWMSCLA register and dividing that by two.

Clock SA = Clock A / (2 * PWMSCLA)

NOTE

When PWMSCLA = $00, PWMSCLA value is considered a full scale value of 256. Clock A is thus divided by 512.

Any value written to this register will cause the scale counter to load the new scale value (PWMSCLA).

Module Base + 0x0008

	7	6	5	4	3	2	1	0
R/W	Bit 7	6	5	4	3	2	1	Bit 0
Reset	0	0	0	0	0	0	0	0

Figure 13-11. PWM Scale A Register (PWMSCLA)

Read: Anytime

Write: Anytime (causes the scale counter to load the PWMSCLA value)

13.3.2.10 PWM Scale B Register (PWMSCLB)

PWMSCLB is the programmable scale value used in scaling clock B to generate clock SB. Clock SB is generated by taking clock B, dividing it by the value in the PWMSCLB register and dividing that by two.

Clock SB = Clock B / (2 * PWMSCLB)

NOTE

When PWMSCLB = $00, PWMSCLB value is considered a full scale value of 256. Clock B is thus divided by 512.

Any value written to this register will cause the scale counter to load the new scale value (PWMSCLB).

Module Base + 0x0009

	7	6	5	4	3	2	1	0
R/W	Bit 7	6	5	4	3	2	1	Bit 0
Reset	0	0	0	0	0	0	0	0

Figure 13-12. PWM Scale B Register (PWMSCLB)

Read: Anytime

Write: Anytime (causes the scale counter to load the PWMSCLB value).

13.3.2.11 Reserved Registers (PWMSCNTx)

The registers PWMSCNTA and PWMSCNTB are reserved for factory testing of the PWM module and are not available in normal modes.

Module Base + 0x000A, 0x000B

	7	6	5	4	3	2	1	0
R	0	0	0	0	0	0	0	0
W								
Reset	0	0	0	0	0	0	0	0

= Unimplemented or Reserved

Figure 13-13. Reserved Registers (PWMSCNTx)

Read: Always read $00 in normal modes

Write: Unimplemented in normal modes

NOTE

Writing to these registers when in special modes can alter the PWM functionality.

13.3.2.12 PWM Channel Counter Registers (PWMCNTx)

Each channel has a dedicated 8-bit up/down counter which runs at the rate of the selected clock source. The counter can be read at any time without affecting the count or the operation of the PWM channel. In left aligned output mode, the counter counts from 0 to the value in the period register - 1. In center aligned output mode, the counter counts from 0 up to the value in the period register and then back down to 0.

Any value written to the counter causes the counter to reset to $00, the counter direction to be set to up, the immediate load of both duty and period registers with values from the buffers, and the output to change according to the polarity bit. The counter is also cleared at the end of the effective period (see Section 13.4.2.5, “Left Aligned Outputs” and Section 13.4.2.6, “Center Aligned Outputs” for more details). When the channel is disabled (PWMEx = 0), the PWMCNTx register does not count. When a channel becomes enabled (PWMEx = 1), the associated PWM counter starts at the count in the PWMCNTx register. For more detailed information on the operation of the counters, see Section 13.4.2.4, “PWM Timer Counters”.

In concatenated mode, writes to the 16-bit counter by using a 16-bit access or writes to either the low or high order byte of the counter will reset the 16-bit counter. Reads of the 16-bit counter must be made by 16-bit access to maintain data coherency.

NOTE

Writing to the counter while the channel is enabled can cause an irregular PWM cycle to occur.

Module Base + 0x000C = PWMCNT0, 0x000D = PWMCNT1, 0x000E = PWMCNT2, 0x000F = PWMCNT3
Module Base + 0x0010 = PWMCNT4, 0x0011 = PWMCNT5, 0x0012 = PWMCNT6, 0x0013 = PWMCNT7

	7	6	5	4	3	2	1	0
R	Bit 7	6	5	4	3	2	1	Bit 0
W	0	0	0	0	0	0	0	0
Reset	0	0	0	0	0	0	0	0

Figure 13-14. PWM Channel Counter Registers (PWMCNTx)

Read: Anytime

Write: Anytime (any value written causes PWM counter to be reset to $00).

13.3.2.13 PWM Channel Period Registers (PWMPERx)

There is a dedicated period register for each channel. The value in this register determines the period of the associated PWM channel.

The period registers for each channel are double buffered so that if they change while the channel is enabled, the change will NOT take effect until one of the following occurs:

- The effective period ends
- The counter is written (counter resets to $00)
- The channel is disabled

In this way, the output of the PWM will always be either the old waveform or the new waveform, not some variation in between. If the channel is not enabled, then writes to the period register will go directly to the latches as well as the buffer.

NOTE

Reads of this register return the most recent value written. Reads do not necessarily return the value of the currently active period due to the double buffering scheme.

See Section 13.4.2.3, “PWM Period and Duty” for more information.

To calculate the output period, take the selected clock source period for the channel of interest (A, B, SA, or SB) and multiply it by the value in the period register for that channel:

- Left aligned output (CAEx = 0)
- PWMx Period = Channel Clock Period * PWMPERx Center Aligned Output (CAEx = 1)

  PWMx Period = Channel Clock Period * (2 * PWMPERx)

For boundary case programming values, please refer to Section 13.4.2.8, “PWM Boundary Cases”.

Module Base + 0x0014 = PWMPER0, 0x0015 = PWMPER1, 0x0016 = PWMPER2, 0x0017 = PWMPER3
Module Base + 0x0018 = PWMPER4, 0x0019 = PWMPER5, 0x001A = PWMPER6, 0x001B = PWMPER7

	7	6	5	4	3	2	1	0
R W	Bit 7	6	5	4	3	2	1	Bit 0
Reset	1	1	1	1	1	1	1	1

Figure 13-15. PWM Channel Period Registers (PWMPERx)

Read: Anytime

Write: Anytime

13.3.2.14 PWM Channel Duty Registers (PWMDTYx)

There is a dedicated duty register for each channel. The value in this register determines the duty of the associated PWM channel. The duty value is compared to the counter and if it is equal to the counter value a match occurs and the output changes state.

The duty registers for each channel are double buffered so that if they change while the channel is enabled, the change will NOT take effect until one of the following occurs:

- The effective period ends
- The counter is written (counter resets to $00)
- The channel is disabled

In this way, the output of the PWM will always be either the old duty waveform or the new duty waveform, not some variation in between. If the channel is not enabled, then writes to the duty register will go directly to the latches as well as the buffer.

NOTE

Reads of this register return the most recent value written. Reads do not necessarily return the value of the currently active duty due to the double buffering scheme.

See Section 13.4.2.3, “PWM Period and Duty” for more information.

NOTE

Depending on the polarity bit, the duty registers will contain the count of either the high time or the low time. If the polarity bit is one, the output starts high and then goes low when the duty count is reached, so the duty registers contain a count of the high time. If the polarity bit is zero, the output starts low and then goes high when the duty count is reached, so the duty registers contain a count of the low time.

To calculate the output duty cycle (high time as a% of period) for a particular channel:

- Polarity = 0 (PPOL x =0)

  Duty Cycle = [(PWMPERx-PWMDTYx)/PWMPERx] * 100%
- Polarity = 1 (PPOLx = 1)

  Duty Cycle = [PWMDTYx / PWMPERx] * 100%

For boundary case programming values, please refer to Section 13.4.2.8, “PWM Boundary Cases”.

Module Base + 0x001C = PWMDTY0, 0x001D = PWMDTY1, 0x001E = PWMDTY2, 0x001F = PWMDTY3
Module Base + 0x0020 = PWMDTY4, 0x0021 = PWMDTY5, 0x0022 = PWMDTY6, 0x0023 = PWMDTY7

	7	6	5	4	3	2	1	0
R W	Bit 7	6	5	4	3	2	1	Bit 0
Reset	1	1	1	1	1	1	1	1

Figure 13-16. PWM Channel Duty Registers (PWMDTYx)

Read: Anytime

Write: Anytime

13.3.2.15 PWM Shutdown Register (PWMSDN)

The PWMSDN register provides for the shutdown functionality of the PWM module in the emergency cases. For proper operation, channel 7 must be driven to the active level for a minimum of two bus clocks.

Module Base + 0x0024

	7	6	5	4	3	2	1	0
R	PWMIF	PWMIE	0	PWMLVL	0	PWM7IN	PWM7INL	PWM7ENA
W			PWMRSTRT					
Reset	0	0	0	0	0	0	0	0

= Unimplemented or Reserved

Figure 13-17. PWM Shutdown Register (PWMSDN)

Read: Anytime

Write: Anytime

Table 13-9. PWMSDN Field Descriptions

Field	Description
7 PWMIF	**PWM Interrupt Flag** — Any change from passive to asserted (active) state or from active to passive state will be flagged by setting the PWMIF flag = 1. The flag is cleared by writing a logic 1 to it. Writing a 0 has no effect. 0 No change on PWM7IN input. 1 Change on PWM7IN input
6 PWMIE	**PWM Interrupt Enable** — If interrupt is enabled an interrupt to the CPU is asserted. 0 PWM interrupt is disabled. 1 PWM interrupt is enabled.
5 PWMRSTRT	**PWM Restart** — The PWM can only be restarted if the PWM channel input 7 is de-asserted. After writing a logic 1 to the PWMRSTRT bit (trigger event) the PWM channels start running after the corresponding counter passes next “counter == 0” phase. Also, if the PWM7ENA bit is reset to 0, the PWM do not start before the counter passes $00. The bit is always read as “0”.
4 PWMLVL	**PWM Shutdown Output Level** If active level as defined by the PWM7IN input, gets asserted all enabled PWM channels are immediately driven to the level defined by PWMLVL. 0 PWM outputs are forced to 0 1 Outputs are forced to 1.
2 PWM7IN	**PWM Channel 7 Input Status** — This reflects the current status of the PWM7 pin.
1 PWM7INL	**PWM Shutdown Active Input Level for Channel 7** — If the emergency shutdown feature is enabled (PWM7ENA = 1), this bit determines the active level of the PWM7channel. 0 Active level is low 1 Active level is high
0 PWM7ENA	**PWM Emergency Shutdown Enable** — If this bit is logic 1, the pin associated with channel 7 is forced to input and the emergency shutdown feature is enabled. All the other bits in this register are meaningful only if PWM7ENA = 1. 0 PWM emergency feature disabled. 1 PWM emergency feature is enabled.

13.4 Functional Description

13.4.1 PWM Clock Select

There are four available clocks: clock A, clock B, clock SA (scaled A), and clock SB (scaled B). These four clocks are based on the bus clock.

Clock A and B can be software selected to be 1, 1/2, 1/4, 1/8,..., 1/64, 1/128 times the bus clock. Clock SA uses clock A as an input and divides it further with a reloadable counter. Similarly, clock SB uses clock B as an input and divides it further with a reloadable counter. The rates available for clock SA are software selectable to be clock A divided by 2, 4, 6, 8,..., or 512 in increments of divide by 2. Similar rates are available for clock SB. Each PWM channel has the capability of selecting one of two clocks, either the pre-scaled clock (clock A or B) or the scaled clock (clock SA or SB).

The block diagram in Figure 13-18 shows the four different clocks and how the scaled clocks are created.

13.4.1.1 Prescale

The input clock to the PWM prescaler is the bus clock. It can be disabled whenever the part is in freeze mode by setting the PFRZ bit in the PWMCTL register. If this bit is set, whenever the MCU is in freeze mode (freeze mode signal active) the input clock to the prescaler is disabled. This is useful for emulation in order to freeze the PWM. The input clock can also be disabled when all eight PWM channels are disabled (PWME7-0 = 0). This is useful for reducing power by disabling the prescale counter.

Clock A and clock B are scaled values of the input clock. The value is software selectable for both clock A and clock B and has options of 1, 1/2, 1/4, 1/8, 1/16, 1/32, 1/64, or 1/128 times the bus clock. The value selected for clock A is determined by the PCKA2, PCKA1, PCKA0 bits in the PWMPRCLK register. The value selected for clock B is determined by the PCKB2, PCKB1, PCKB0 bits also in the PWMPRCLK register.

13.4.1.2 Clock Scale

The scaled A clock uses clock A as an input and divides it further with a user programmable value and then divides this by 2. The scaled B clock uses clock B as an input and divides it further with a user programmable value and then divides this by 2. The rates available for clock SA are software selectable to be clock A divided by 2, 4, 6, 8,..., or 512 in increments of divide by 2. Similar rates are available for clock SB.

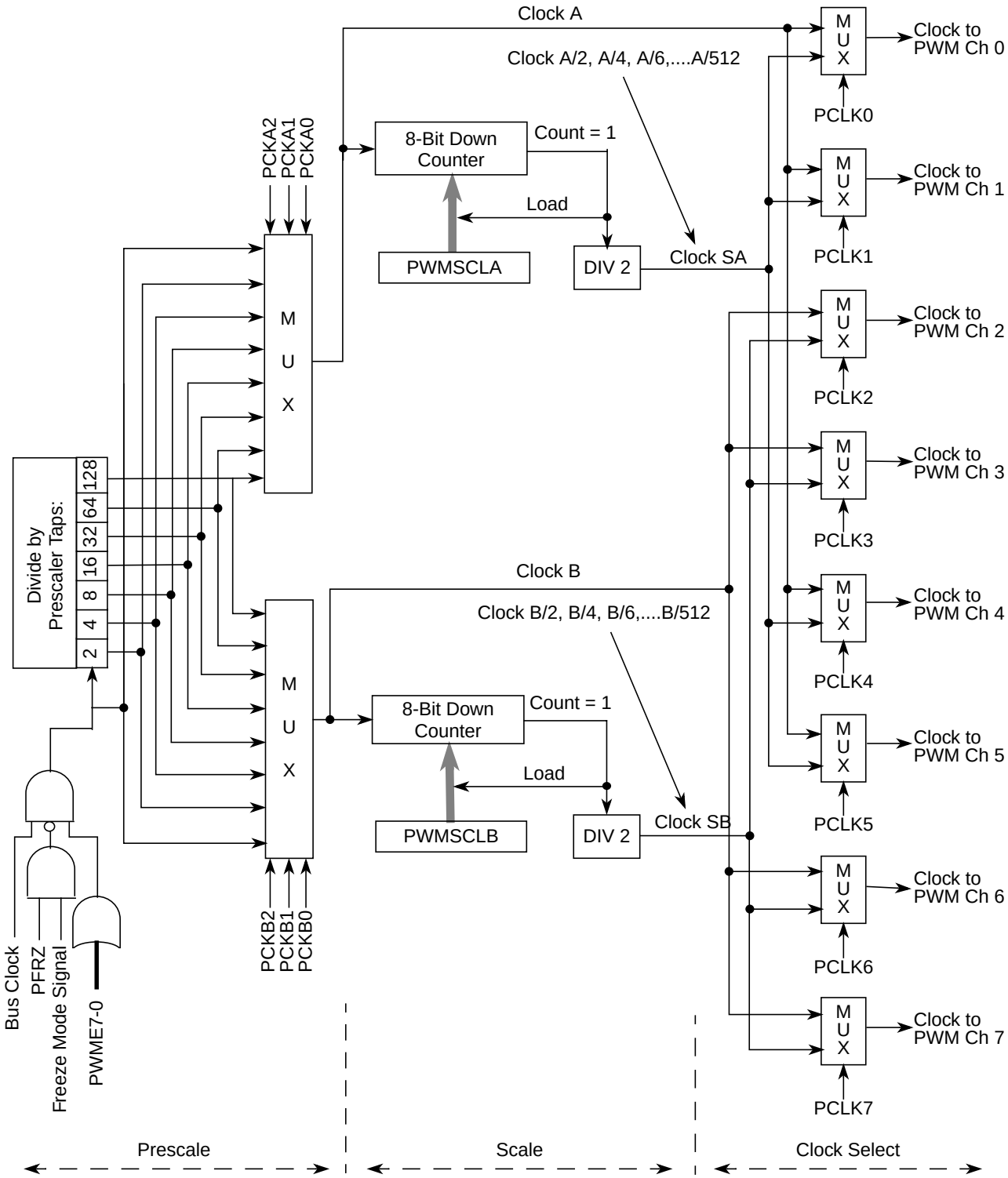

Figure 13-18. PWM Clock Select Block Diagram

Clock A is used as an input to an 8-bit down counter. This down counter loads a user programmable scale value from the scale register (PWMSCLA). When the down counter reaches one, a pulse is output and the 8-bit counter is re-loaded. The output signal from this circuit is further divided by two. This gives a greater range with only a slight reduction in granularity. Clock SA equals clock A divided by two times the value in the PWMSCLA register.

NOTE

Clock SA = Clock A / (2 * PWMSCLA)

When PWMSCLA = $00, PWMSCLA value is considered a full scale value of 256. Clock A is thus divided by 512.

Similarly, clock B is used as an input to an 8-bit down counter followed by a divide by two producing clock SB. Thus, clock SB equals clock B divided by two times the value in the PWMSCLB register.

NOTE

Clock SB = Clock B / (2 * PWMSCLB)

When PWMSCLB = $00, PWMSCLB value is considered a full scale value of 256. Clock B is thus divided by 512.

As an example, consider the case in which the user writes $FF into the PWMSCLA register. Clock A for this case will be E divided by 4. A pulse will occur at a rate of once every 255x4 E cycles. Passing this through the divide by two circuit produces a clock signal at an E divided by 2040 rate. Similarly, a value of $01 in the PWMSCLA register when clock A is E divided by 4 will produce a clock at an E divided by 8 rate.

Writing to PWMSCLA or PWMSCLB causes the associated 8-bit down counter to be re-loaded. Otherwise, when changing rates the counter would have to count down to $01 before counting at the proper rate. Forcing the associated counter to re-load the scale register value every time PWMSCLA or PWMSCLB is written prevents this.

NOTE

Writing to the scale registers while channels are operating can cause irregularities in the PWM outputs.

13.4.1.3 Clock Select

Each PWM channel has the capability of selecting one of two clocks. For channels 0, 1, 4, and 5 the clock choices are clock A or clock SA. For channels 2, 3, 6, and 7 the choices are clock B or clock SB. The clock selection is done with the PCLKx control bits in the PWMCLK register.

NOTE

Changing clock control bits while channels are operating can cause irregularities in the PWM outputs.

13.4.2 PWM Channel Timers

The main part of the PWM module are the actual timers. Each of the timer channels has a counter, a period register and a duty register (each are 8-bit). The waveform output period is controlled by a match between the period register and the value in the counter. The duty is controlled by a match between the duty register and the counter value and causes the state of the output to change during the period. The starting polarity of the output is also selectable on a per channel basis. Shown below in Figure 13-19 is the block diagram for the PWM timer.

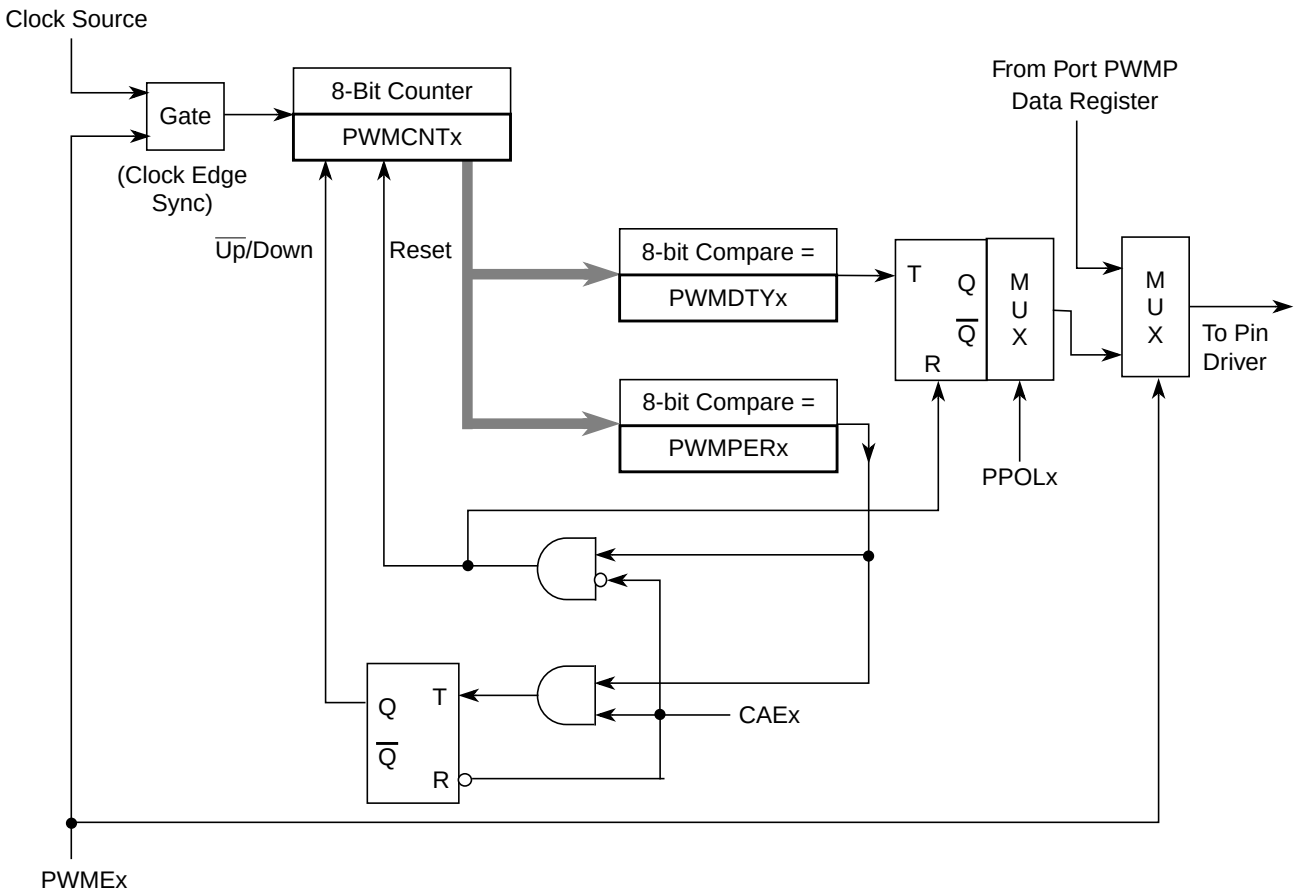

Figure 13-19. PWM Timer Channel Block Diagram

13.4.2.1 PWM Enable

Each PWM channel has an enable bit (PWMEx) to start its waveform output. When any of the PWMEx bits are set (PWMEx = 1), the associated PWM output signal is enabled immediately. However, the actual PWM waveform is not available on the associated PWM output until its clock source begins its next cycle due to the synchronization of PWMEx and the clock source. An exception to this is when channels are concatenated. Refer to Section 13.4.2.7, “PWM 16-Bit Functions” for more detail.

NOTE

The first PWM cycle after enabling the channel can be irregular.

On the front end of the PWM timer, the clock is enabled to the PWM circuit by the PWMEx bit being high. There is an edge-synchronizing circuit to guarantee that the clock will only be enabled or disabled at an edge. When the channel is disabled (PWMEx = 0), the counter for the channel does not count.

13.4.2.2 PWM Polarity

Each channel has a polarity bit to allow starting a waveform cycle with a high or low signal. This is shown on the block diagram as a mux select of either the Q output or the $\overline{Q}$ output of the PWM output flip flop. When one of the bits in the PWMPOL register is set, the associated PWM channel output is high at the beginning of the waveform, then goes low when the duty count is reached. Conversely, if the polarity bit is zero, the output starts low and then goes high when the duty count is reached.

13.4.2.3 PWM Period and Duty

Dedicated period and duty registers exist for each channel and are double buffered so that if they change while the channel is enabled, the change will NOT take effect until one of the following occurs:

- The effective period ends
- The counter is written (counter resets to $00)
- The channel is disabled

In this way, the output of the PWM will always be either the old waveform or the new waveform, not some variation in between. If the channel is not enabled, then writes to the period and duty registers will go directly to the latches as well as the buffer.

A change in duty or period can be forced into effect “immediately” by writing the new value to the duty and/or period registers and then writing to the counter. This forces the counter to reset and the new duty and/or period values to be latched. In addition, since the counter is readable, it is possible to know where the count is with respect to the duty value and software can be used to make adjustments

NOTE

When forcing a new period or duty into effect immediately, an irregular PWM cycle can occur.

Depending on the polarity bit, the duty registers will contain the count of either the high time or the low time.

13.4.2.4 PWM Timer Counters

Each channel has a dedicated 8-bit up/down counter which runs at the rate of the selected clock source (see Section 13.4.1, “PWM Clock Select” for the available clock sources and rates). The counter compares to two registers, a duty register and a period register as shown in Figure 13-19. When the PWM counter matches the duty register, the output flip-flop changes state, causing the PWM waveform to also change state. A match between the PWM counter and the period register behaves differently depending on what output mode is selected as shown in Figure 13-19 and described in Section 13.4.2.5, “Left Aligned Outputs” and Section 13.4.2.6, “Center Aligned Outputs”.

Each channel counter can be read at anytime without affecting the count or the operation of the PWM channel.

Any value written to the counter causes the counter to reset to $00, the counter direction to be set to up, the immediate load of both duty and period registers with values from the buffers, and the output to change according to the polarity bit. When the channel is disabled (PWMEx = 0), the counter stops. When a channel becomes enabled (PWMEx = 1), the associated PWM counter continues from the count in the PWMCNTx register. This allows the waveform to continue where it left off when the channel is re-enabled. When the channel is disabled, writing “0” to the period register will cause the counter to reset on the next selected clock.

NOTE

If the user wants to start a new “clean” PWM waveform without any “history” from the old waveform, the user must write to channel counter (PWMCNTx) prior to enabling the PWM channel (PWMEx = 1).

Generally, writes to the counter are done prior to enabling a channel in order to start from a known state. However, writing a counter can also be done while the PWM channel is enabled (counting). The effect is similar to writing the counter when the channel is disabled, except that the new period is started immediately with the output set according to the polarity bit.

NOTE

Writing to the counter while the channel is enabled can cause an irregular PWM cycle to occur.

The counter is cleared at the end of the effective period (see Section 13.4.2.5, “Left Aligned Outputs” and Section 13.4.2.6, “Center Aligned Outputs” for more details).

Table 13-10. PWM Timer Counter Conditions

Counter Clears ($00)	Counter Counts	Counter Stops
When PWMCNTx register written to any value	When PWM channel is enabled (PWMEx = 1). Counts from last value in PWMCNTx.	When PWM channel is disabled (PWMEx = 0)
Effective period ends		

13.4.2.5 Left Aligned Outputs

The PWM timer provides the choice of two types of outputs, left aligned or center aligned. They are selected with the CAEx bits in the PWMCAE register. If the CAEx bit is cleared (CAEx = 0), the corresponding PWM output will be left aligned.

In left aligned output mode, the 8-bit counter is configured as an up counter only. It compares to two registers, a duty register and a period register as shown in the block diagram in Figure 13-19. When the PWM counter matches the duty register the output flip-flop changes state causing the PWM waveform to also change state. A match between the PWM counter and the period register resets the counter and the output flip-flop, as shown in Figure 13-19, as well as performing a load from the double buffer period and duty register to the associated registers, as described in Section 13.4.2.3, “PWM Period and Duty”. The counter counts from 0 to the value in the period register – 1.

NOTE

Changing the PWM output mode from left aligned to center aligned output (or vice versa) while channels are operating can cause irregularities in the PWM output. It is recommended to program the output mode before enabling the PWM channel.

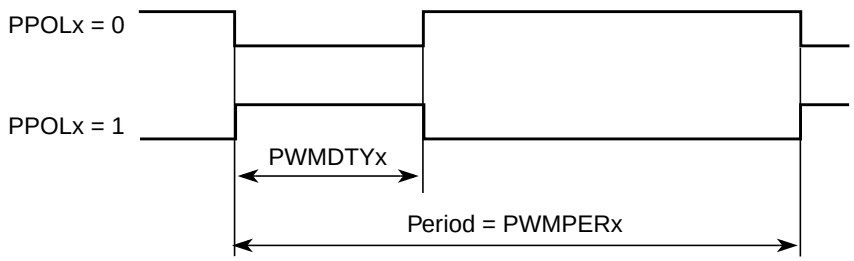

Figure 13-20. PWM Left Aligned Output Waveform

To calculate the output frequency in left aligned output mode for a particular channel, take the selected clock source frequency for the channel (A, B, SA, or SB) and divide it by the value in the period register for that channel.

- PWMx Frequency = Clock (A, B, SA, or SB) / PWMPERx
- PWMx Duty Cycle (high time as a% of period):
  - Polarity = 0 (PPOLx = 0)
- Duty Cycle = [(PWMPERx-PWMDTYx)/PWMPERx] * 100%
  - Polarity = 1 (PPOLx = 1)

  Duty Cycle = [PWMDTYx / PWMPERx] * 100%

As an example of a left aligned output, consider the following case:

Clock Source = E, where E = 10 MHz (100 ns period)

PPOLx = 0

PWMPERx = 4

PWMDTYx = 1

PWMx Frequency = 10 MHz/4 = 2.5 MHz

PWMx Period = 400 ns

PWMx Duty Cycle = 3/4 *100% = 75%

The output waveform generated is shown in Figure 13-21.

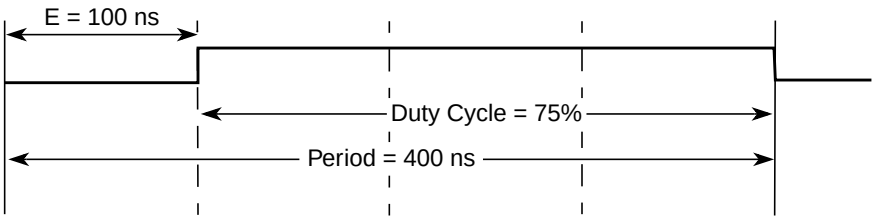

Figure 13-21. PWM Left Aligned Output Example Waveform

13.4.2.6 Center Aligned Outputs

For center aligned output mode selection, set the CAEx bit (CAEx = 1) in the PWMCAE register and the corresponding PWM output will be center aligned.

The 8-bit counter operates as an up/down counter in this mode and is set to up whenever the counter is equal to $00. The counter compares to two registers, a duty register and a period register as shown in the block diagram in Figure 13-19. When the PWM counter matches the duty register, the output flip-flop changes state, causing the PWM waveform to also change state. A match between the PWM counter and the period register changes the counter direction from an up-count to a down-count. When the PWM counter decrements and matches the duty register again, the output flip-flop changes state causing the PWM output to also change state. When the PWM counter decrements and reaches zero, the counter direction changes from a down-count back to an up-count and a load from the double buffer period and duty registers to the associated registers is performed, as described in Section 13.4.2.3, “PWM Period and Duty”. The counter counts from 0 up to the value in the period register and then back down to 0. Thus the effective period is PWMPERx*2.

NOTE

Changing the PWM output mode from left aligned to center aligned output (or vice versa) while channels are operating can cause irregularities in the PWM output. It is recommended to program the output mode before enabling the PWM channel.

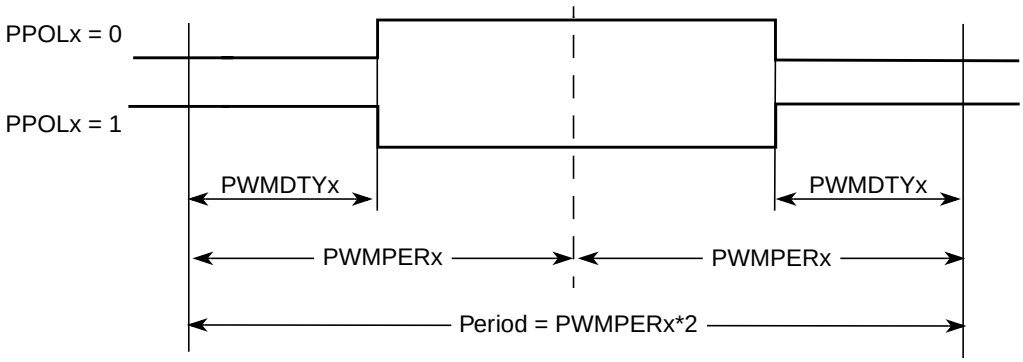

Figure 13-22. PWM Center Aligned Output Waveform

To calculate the output frequency in center aligned output mode for a particular channel, take the selected clock source frequency for the channel (A, B, SA, or SB) and divide it by twice the value in the period register for that channel.

- PWMx Frequency = Clock (A, B, SA, or SB) / (2*PWMPERx)
- PWMx Duty Cycle (high time as a% of period):
  - Polarity = 0 (PPOLx = 0)

    Duty Cycle = [(PWMPERx-PWMDTYx)/PWMPERx] * 100%
  - Polarity = 1 (PPOLx = 1)

    Duty Cycle = [PWMDTYx / PWMPERx] * 100%

As an example of a center aligned output, consider the following case:

Clock Source = E, where E = 10 MHz (100 ns period)

PPOLx = 0

PWMPERx = 4

PWMDTYx = 1

PWMx Frequency = 10 MHz/8 = 1.25 MHz

PWMx Period = 800 ns

PWMx Duty Cycle = 3/4 *100% = 75%

Shown in Figure 13-23 is the output waveform generated.

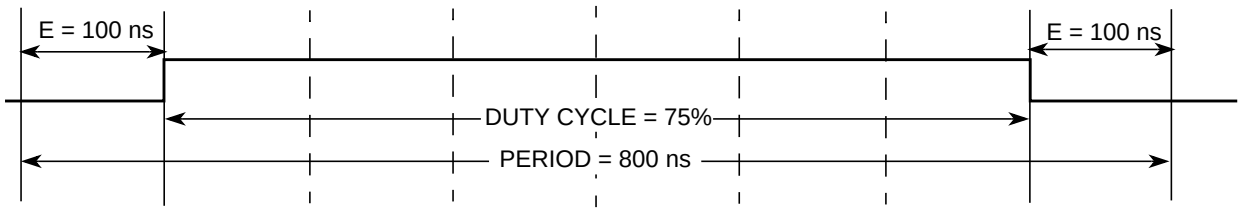

Figure 13-23. PWM Center Aligned Output Example Waveform

13.4.2.7 PWM 16-Bit Functions

The PWM timer also has the option of generating 8-channels of 8-bits or 4-channels of 16-bits for greater PWM resolution. This 16-bit channel option is achieved through the concatenation of two 8-bit channels.

The PWMCTL register contains four control bits, each of which is used to concatenate a pair of PWM channels into one 16-bit channel. Channels 6 and 7 are concatenated with the CON67 bit, channels 4 and 5 are concatenated with the CON45 bit, channels 2 and 3 are concatenated with the CON23 bit, and channels 0 and 1 are concatenated with the CON01 bit.

NOTE

Change these bits only when both corresponding channels are disabled.

When channels 6 and 7 are concatenated, channel 6 registers become the high order bytes of the double byte channel, as shown in Figure 13-24. Similarly, when channels 4 and 5 are concatenated, channel 4 registers become the high order bytes of the double byte channel. When channels 2 and 3 are concatenated, channel 2 registers become the high order bytes of the double byte channel. When channels 0 and 1 are concatenated, channel 0 registers become the high order bytes of the double byte channel.

When using the 16-bit concatenated mode, the clock source is determined by the low order 8-bit channel clock select control bits. That is channel 7 when channels 6 and 7 are concatenated, channel 5 when channels 4 and 5 are concatenated, channel 3 when channels 2 and 3 are concatenated, and channel 1 when channels 0 and 1 are concatenated. The resulting PWM is output to the pins of the corresponding low order 8-bit channel as also shown in Figure 13-24. The polarity of the resulting PWM output is controlled by the PPOLx bit of the corresponding low order 8-bit channel as well.

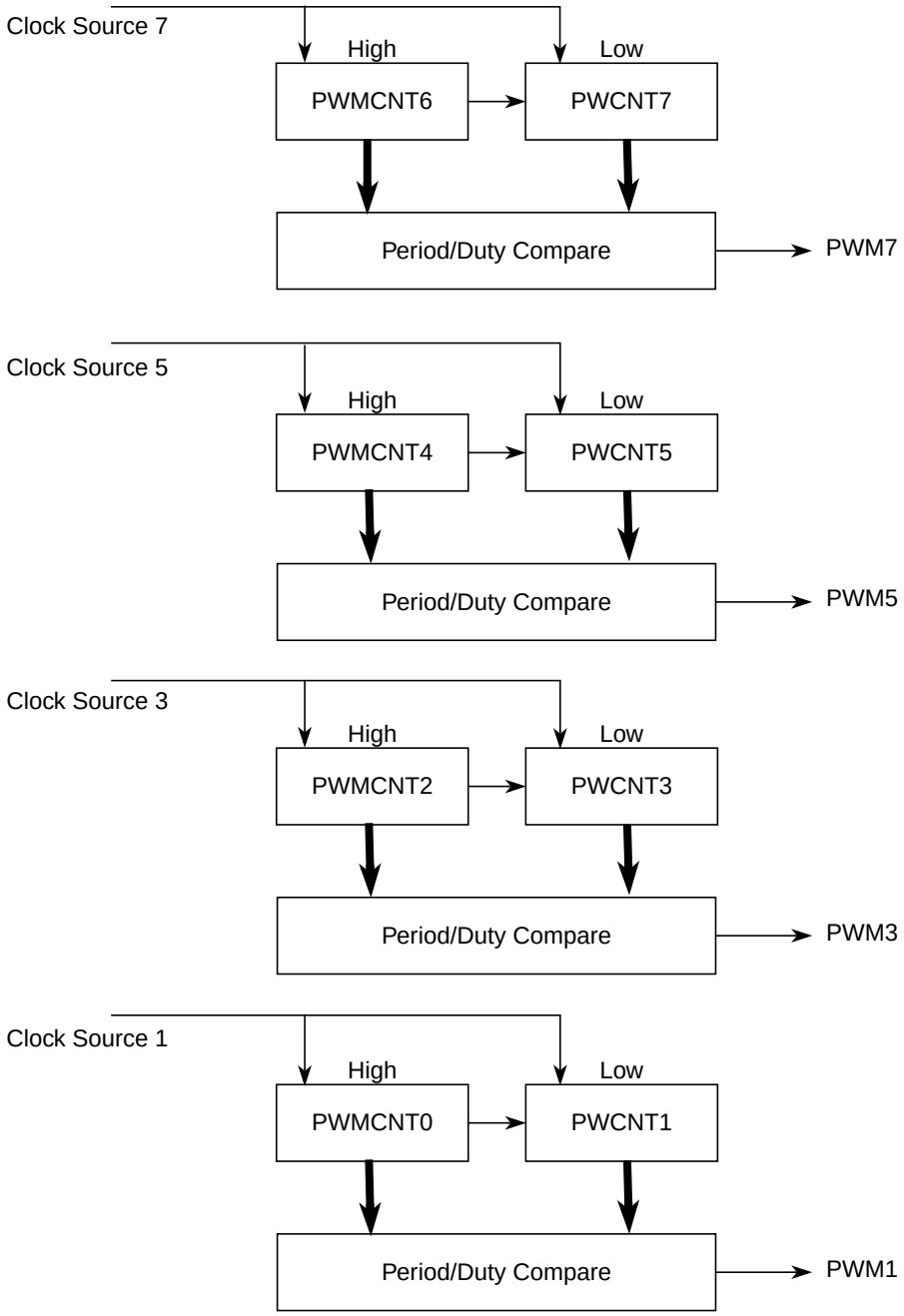

Figure 13-24. PWM 16-Bit Mode

Once concatenated mode is enabled (CONxx bits set in PWMCTL register), enabling/disabling the corresponding 16-bit PWM channel is controlled by the low order PWMEx bit. In this case, the high order bytes PWMEx bits have no effect and their corresponding PWM output is disabled.

In concatenated mode, writes to the 16-bit counter by using a 16-bit access or writes to either the low or high order byte of the counter will reset the 16-bit counter. Reads of the 16-bit counter must be made by 16-bit access to maintain data coherency.

Either left aligned or center aligned output mode can be used in concatenated mode and is controlled by the low order CAEx bit. The high order CAEx bit has no effect.

Table 13-11 is used to summarize which channels are used to set the various control bits when in 16-bit mode.

Table 13-11. 16-bit Concatenation Mode Summary

CONxx	PWMEx	PPOLx	PCLKx	CAEx	PWMx Output
CON67	PWME7	PPOL7	PCLK7	CAE7	PWM7
CON45	PWME5	PPOL5	PCLK5	CAE5	PWM5
CON23	PWME3	PPOL3	PCLK3	CAE3	PWM3
CON01	PWME1	PPOL1	PCLK1	CAE1	PWM1

13.4.2.8 PWM Boundary Cases

Table 13-12 summarizes the boundary conditions for the PWM regardless of the output mode (left aligned or center aligned) and 8-bit (normal) or 16-bit (concatenation).

Table 13-12. PWM Boundary Cases

PWMDTYx	PWMPERx	PPOLx	PWMx Output
$00 (indicates no duty)	>$00	1	Always low
$00 (indicates no duty)	>$00	0	Always high
XX	$00[1] (indicates no period)	1	Always high
XX	$00[1] (indicates no period)	0	Always low
>= PWMPERx	XX	1	Always high
>= PWMPERx	XX	0	Always low

1 Counter = $00 and does not count.

13.5 Resets

The reset state of each individual bit is listed within the Section 13.3.2, “Register Descriptions” which details the registers and their bit-fields. All special functions or modes which are initialized during or just following reset are described within this section.

- The 8-bit up/down counter is configured as an up counter out of reset.
- All the channels are disabled and all the counters do not count.

13.6 Interrupts

The PWM module has only one interrupt which is generated at the time of emergency shutdown, if the corresponding enable bit (PWMIE) is set. This bit is the enable for the interrupt. The interrupt flag PWMIF is set whenever the input level of the PWM7 channel changes while PWM7ENA = 1 or when PWMENA is being asserted while the level at PWM7 is active.

In stop mode or wait mode (with the PSWAI bit set), the emergency shutdown feature will drive the PWM outputs to their shutdown output levels but the PWMIF flag will not be set.

A description of the registers involved and affected due to this interrupt is explained in Section 13.3.2.15, “PWM Shutdown Register (PWMSDN)”.

The PWM block only generates the interrupt and does not service it. The interrupt signal name is PWM interrupt signal.

Chapter 14
Serial Communication Interface (S12SCIV5)

Table 14-1. Revision History

Version Number	Revision Date	Effective Date	Author	Description of Changes
05.03	12/25/2008			remove redundancy comments in Figure1-2
05.04	08/05/2009			fix typo, SCIBDL reset value be 0x04, not 0x00
05.05	06/03/2010			fix typo, Table 14-4,SCICR1 Even parity should be PT=0 fix typo, on page 14-419,should be BKDIF,not BLDIF

14.1 Introduction

This block guide provides an overview of the serial communication interface (SCI) module.

The SCI allows asynchronous serial communications with peripheral devices and other CPUs.

14.1.1 Glossary

IR: InfraRed

IrDA: Infrared Design Associate

IRQ: Interrupt Request

LIN: Local Interconnect Network

LSB: Least Significant Bit

MSB: Most Significant Bit

NRZ: Non-Return-to-Zero

RZI: Return-to-Zero-Inverted

RXD: Receive Pin

SCI : Serial Communication Interface

TXD: Transmit Pin

14.1.2 Features

The SCI includes these distinctive features:

- Full-duplex or single-wire operation
- Standard mark/space non-return-to-zero (NRZ) format
- Selectable IrDA 1.4 return-to-zero-inverted (RZI) format with programmable pulse widths
- 13-bit baud rate selection
- Programmable 8-bit or 9-bit data format
- Separately enabled transmitter and receiver
- Programmable polarity for transmitter and receiver
- Programmable transmitter output parity
- Two receiver wakeup methods:
  - Idle line wakeup
  - Address mark wakeup
- Interrupt-driven operation with eight flags:
  - Transmitter empty
  - Transmission complete
  - Receiver full
  - Idle receiver input
  - Receiver overrun
  - Noise error
  - Framing error
  - Parity error
  - Receive wakeup on active edge
  - Transmit collision detect supporting LIN
  - Break Detect supporting LIN
- Receiver framing error detection
- Hardware parity checking
- 1/16 bit-time noise detection

14.1.3 Modes of Operation

The SCI functions the same in normal, special, and emulation modes. It has two low power modes, wait and stop modes.

- Run mode
- Wait mode
- Stop mode

14.1.4 Block Diagram

Figure 14-1 is a high level block diagram of the SCI module, showing the interaction of various function blocks.

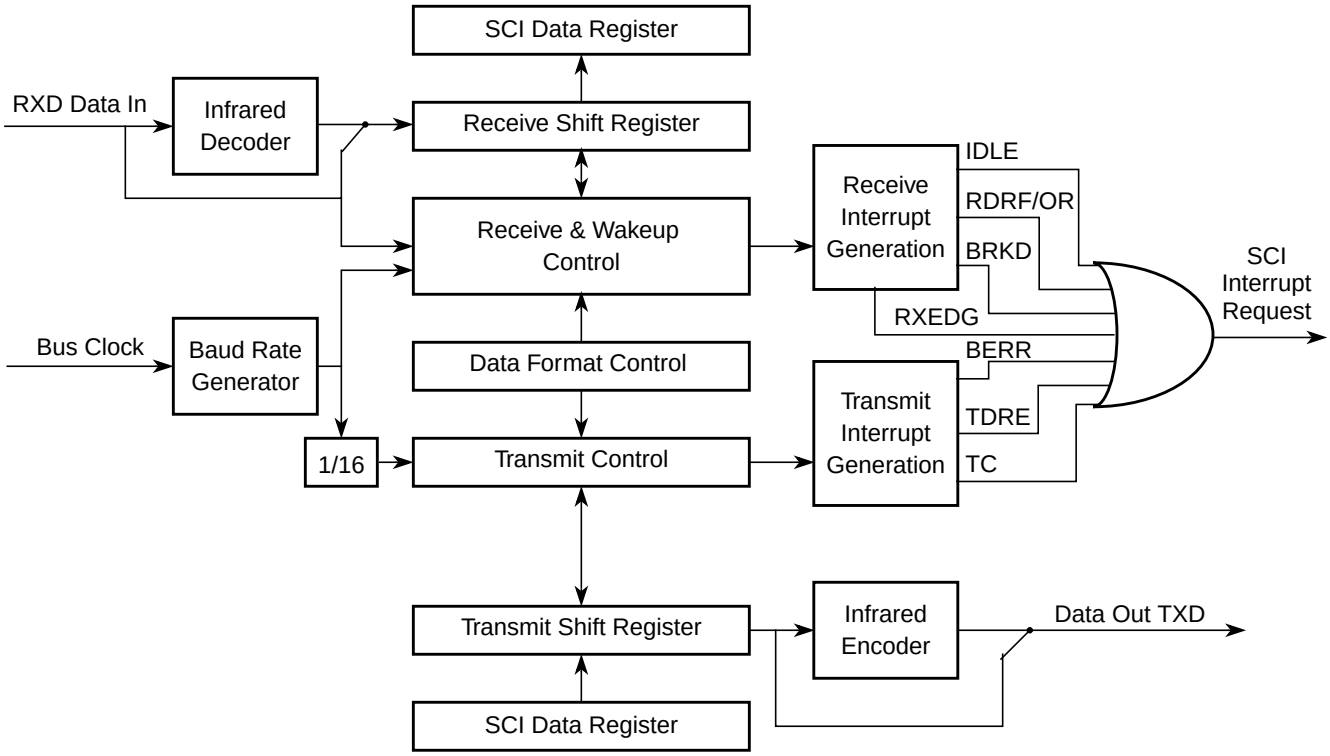

Figure 14-1. SCI Block Diagram

14.2 External Signal Description

The SCI module has a total of two external pins.

14.2.1 TXD — Transmit Pin

The TXD pin transmits SCI (standard or infrared) data. It will idle high in either mode and is high impedance anytime the transmitter is disabled.

14.2.2 RXD — Receive Pin

The RXD pin receives SCI (standard or infrared) data. An idle line is detected as a line high. This input is ignored when the receiver is disabled and should be terminated to a known voltage.

14.3 Memory Map and Register Definition

This section provides a detailed description of all the SCI registers.

14.3.1 Module Memory Map and Register Definition

The memory map for the SCI module is given below in Figure 14-2. The address listed for each register is the address offset. The total address for each register is the sum of the base address for the SCI module and the address offset for each register.

14.3.2 Register Descriptions

This section consists of register descriptions in address order. Each description includes a standard register diagram with an associated figure number. Writes to a reserved register locations do not have any effect and reads of these locations return a zero. Details of register bit and field function follow the register diagrams, in bit order.

Register Name		Bit 7	6	5	4	3	2	1	Bit 0
0x0000 SCIBDH[1]	R/W	IREN	TNP1	TNP0	SBR12	SBR11	SBR10	SBR9	SBR8
0x0001 SCIBDL[1]	R/W	SBR7	SBR6	SBR5	SBR4	SBR3	SBR2	SBR1	SBR0
0x0002 SCICR1[1]	R/W	LOOPS	SCISWAI	RSRC	M	WAKE	ILT	PE	PT
0x0000 SCIASR1[2]	R	RXEDGIF	0	0	0	0	BERRV	BERRIF	BKDIF
	W								
0x0001 SCIACR1[2]	R	RXEDGIE	0	0	0	0	0	BERRIE	BKDIE
	W								
0x0002 SCIACR2[2]	R	0	0	0	0	0	BERRM1	BERRM0	BKDFE
	W								
0x0003 SCICR2	R/W	TIE	TCIE	RIE	ILIE	TE	RE	RWU	SBK
0x0004 SCISR1	R	TDRE	TC	RDRF	IDLE	OR	NF	FE	PF
	W								
0x0005 SCISR2	R	AMAP	0	0	TXPOL	RXPOL	BRK13	TXDIR	RAF
	W								
0x0006 SCIDRH	R	R8	T8	0	0	0	0	0	0
	W								
0x0007 SCIDRL	R	R7	R6	R5	R4	R3	R2	R1	R0
	W	T7	T6	T5	T4	T3	T2	T1	T0

1.These registers are accessible if the AMAP bit in the SCISR2 register is set to zero.

2,These registers are accessible if the AMAP bit in the SCISR2 register is set to one.

= Unimplemented or Reserved

Figure 14-2. SCI Register Summary

14.3.2.1 SCI Baud Rate Registers (SCIBDH, SCIBDL)

Module Base + 0x0000

	7	6	5	4	3	2	1	0
R W	IREN	TNP1	TNP0	SBR12	SBR11	SBR10	SBR9	SBR8
Reset	0	0	0	0	0	0	0	0

Figure 14-3. SCI Baud Rate Register (SCIBDH)

Module Base + 0x0001

	7	6	5	4	3	2	1	0
R W	SBR7	SBR6	SBR5	SBR4	SBR3	SBR2	SBR1	SBR0
Reset	0	0	0	0	0	1	0	0

Figure 14-4. SCI Baud Rate Register (SCIBDL)

Read: Anytime, if AMAP = 0. If only SCIBDH is written to, a read will not return the correct data until SCIBDL is written to as well, following a write to SCIBDH.

Write: Anytime, if AMAP = 0.

NOTE

Those two registers are only visible in the memory map if AMAP = 0 (reset condition).

The SCI baud rate register is used by to determine the baud rate of the SCI, and to control the infrared modulation/demodulation submodule.

Table 14-2. SCIBDH and SCIBDL Field Descriptions

Field	Description
7 IREN	**Infrared Enable Bit** — This bit enables/disables the infrared modulation/demodulation submodule. 0 IR disabled 1 IR enabled
6:5 TNP[1:0]	**Transmitter Narrow Pulse Bits** — These bits enable whether the SCI transmits a 1/16, 3/16, 1/32 or 1/4 narrow pulse. See Table 14-3.
4:0 7:0 SBR[12:0]	**SCI Baud Rate Bits** — The baud rate for the SCI is determined by the bits in this register. The baud rate is calculated two different ways depending on the state of the IREN bit. The formulas for calculating the baud rate are: When IREN = 0 then, SCI baud rate = SCI bus clock / (16 x SBR[12:0]) When IREN = 1 then, SCI baud rate = SCI bus clock / (32 x SBR[12:1]) **Note:** The baud rate generator is disabled after reset and not started until the TE bit or the RE bit is set for the first time. The baud rate generator is disabled when (SBR[12:0] = 0 and IREN = 0) or (SBR[12:1] = 0 and IREN = 1). **Note:** Writing to SCIBDH has no effect without writing to SCIBDL, because writing to SCIBDH puts the data in a temporary location until SCIBDL is written to.

Table 14-3. IRSCI Transmit Pulse Width

TNP[1:0]	Narrow Pulse Width
11	1/4
10	1/32
01	1/16
00	3/16

14.3.2.2 SCI Control Register 1 (SCICR1)

Module Base + 0x0002

	7	6	5	4	3	2	1	0
R W	LOOPS	SCISWAI	RSRC	M	WAKE	ILT	PE	PT
Reset	0	0	0	0	0	0	0	0

Figure 14-5. SCI Control Register 1 (SCICR1)

Read: Anytime, if AMAP = 0.

Write: Anytime, if AMAP = 0.

NOTE

This register is only visible in the memory map if AMAP = 0 (reset condition).

Table 14-4. SCICR1 Field Descriptions

Field	Description
7 LOOPS	**Loop Select Bit** — LOOPS enables loop operation. In loop operation, the RXD pin is disconnected from the SCI and the transmitter output is internally connected to the receiver input. Both the transmitter and the receiver must be enabled to use the loop function. 0 Normal operation enabled 1 Loop operation enabled The receiver input is determined by the RSRC bit.
6 SCISWAI	**SCI Stop in Wait Mode Bit** — SCISWAI disables the SCI in wait mode. 0 SCI enabled in wait mode 1 SCI disabled in wait mode
5 RSRC	**Receiver Source Bit** — When LOOPS = 1, the RSRC bit determines the source for the receiver shift register input. See Table 14-5. 0 Receiver input internally connected to transmitter output 1 Receiver input connected externally to transmitter
4 M	**Data Format Mode Bit** — MODE determines whether data characters are eight or nine bits long. 0 One start bit, eight data bits, one stop bit 1 One start bit, nine data bits, one stop bit
3 WAKE	**Wakeup Condition Bit** — WAKE determines which condition wakes up the SCI: a logic 1 (address mark) in the most significant bit position of a received data character or an idle condition on the RXD pin. 0 Idle line wakeup 1 Address mark wakeup

Table 14-4. SCICR1 Field Descriptions (continued)

Field	Description
2 ILT	**Idle Line Type Bit** — ILT determines when the receiver starts counting logic 1s as idle character bits. The counting begins either after the start bit or after the stop bit. If the count begins after the start bit, then a string of logic 1s preceding the stop bit may cause false recognition of an idle character. Beginning the count after the stop bit avoids false idle character recognition, but requires properly synchronized transmissions. 0 Idle character bit count begins after start bit 1 Idle character bit count begins after stop bit
1 PE	**Parity Enable Bit** — PE enables the parity function. When enabled, the parity function inserts a parity bit in the most significant bit position. 0 Parity function disabled 1 Parity function enabled
0 PT	**Parity Type Bit** — PT determines whether the SCI generates and checks for even parity or odd parity. With even parity, an even number of 1s clears the parity bit and an odd number of 1s sets the parity bit. With odd parity, an odd number of 1s clears the parity bit and an even number of 1s sets the parity bit. 0 Even parity 1 Odd parity

Table 14-5. Loop Functions

LOOPS	RSRC	Function
0	x	Normal operation
1	0	Loop mode with transmitter output internally connected to receiver input
1	1	Single-wire mode with TXD pin connected to receiver input

14.3.2.3 SCI Alternative Status Register 1 (SCIASR1)

Module Base + 0x0000

	7	6	5	4	3	2	1	0
R	RXEDGIF	0	0	0	0	BERRV	BERRIF	BKDIF
W								
Reset	0	0	0	0	0	0	0	0

= Unimplemented or Reserved

Figure 14-6. SCI Alternative Status Register 1 (SCIASR1)

Read: Anytime, if AMAP = 1

Write: Anytime, if AMAP = 1

Table 14-6. SCIASR1 Field Descriptions

Field	Description
7 RXEDGIF	**Receive Input Active Edge Interrupt Flag** — RXEDGIF is asserted, if an active edge (falling if RXPOL = 0, rising if RXPOL = 1) on the RXD input occurs. RXEDGIF bit is cleared by writing a “1” to it. 0 No active receive on the receive input has occurred 1 An active edge on the receive input has occurred
2 BERRV	**Bit Error Value** — BERRV reflects the state of the RXD input when the bit error detect circuitry is enabled and a mismatch to the expected value happened. The value is only meaningful, if BERRIF = 1. 0 A low input was sampled, when a high was expected 1 A high input reassembled, when a low was expected
1 BERRIF	**Bit Error Interrupt Flag** — BERRIF is asserted, when the bit error detect circuitry is enabled and if the value sampled at the RXD input does not match the transmitted value. If the BERRIE interrupt enable bit is set an interrupt will be generated. The BERRIF bit is cleared by writing a “1” to it. 0 No mismatch detected 1 A mismatch has occurred
0 BKDIF	**Break Detect Interrupt Flag** — BKDIF is asserted, if the break detect circuitry is enabled and a break signal is received. If the BKDIE interrupt enable bit is set an interrupt will be generated. The BKDIF bit is cleared by writing a “1” to it. 0 No break signal was received 1 A break signal was received

14.3.2.4 SCI Alternative Control Register 1 (SCIACR1)

Module Base + 0x0001

	7	6	5	4	3	2	1	0
R	RXEDGIE	0	0	0	0	0	BERRIE	BKDIE
W								
Reset	0	0	0	0	0	0	0	0

= Unimplemented or Reserved

Figure 14-7. SCI Alternative Control Register 1 (SCIACR1)

Read: Anytime, if AMAP = 1

Write: Anytime, if AMAP = 1

Table 14-7. SCIACR1 Field Descriptions

Field	Description
7 RSEDGIE	**Receive Input Active Edge Interrupt Enable** — RXEDGIE enables the receive input active edge interrupt flag, RXEDGIF, to generate interrupt requests. 0 RXEDGIF interrupt requests disabled 1 RXEDGIF interrupt requests enabled
1 BERRIE	**Bit Error Interrupt Enable** — BERRIE enables the bit error interrupt flag, BERRIF, to generate interrupt requests. 0 BERRIF interrupt requests disabled 1 BERRIF interrupt requests enabled
0 BKDIE	**Break Detect Interrupt Enable** — BKDIE enables the break detect interrupt flag, BKDIF, to generate interrupt requests. 0 BKDIF interrupt requests disabled 1 BKDIF interrupt requests enabled

14.3.2.5 SCI Alternative Control Register 2 (SCIACR2)

Module Base + 0x0002

	7	6	5	4	3	2	1	0
R	0	0	0	0	0	BERRM1	BERRM0	BKDFE
W								
Reset	0	0	0	0	0	0	0	0

= Unimplemented or Reserved

Figure 14-8. SCI Alternative Control Register 2 (SCIACR2)

Read: Anytime, if AMAP = 1

Write: Anytime, if AMAP = 1

Table 14-8. SCIACR2 Field Descriptions

Field	Description
2:1 BERRM[1:0]	**Bit Error Mode** — Those two bits determines the functionality of the bit error detect feature. See Table 14-9.
0 BKDFE	**Break Detect Feature Enable** — BKDFE enables the break detect circuitry. 0 Break detect circuit disabled 1 Break detect circuit enabled

Table 14-9. Bit Error Mode Coding

BERRM1	BERRM0	Function
0	0	Bit error detect circuit is disabled
0	1	Receive input sampling occurs during the 9th time tick of a transmitted bit (refer to Figure 14-19)
1	0	Receive input sampling occurs during the 13th time tick of a transmitted bit (refer to Figure 14-19)
1	1	Reserved

14.3.2.6 SCI Control Register 2 (SCICR2)

Module Base + 0x0003

	7	6	5	4	3	2	1	0
R W	TIE	TCIE	RIE	ILIE	TE	RE	RWU	SBK
Reset	0	0	0	0	0	0	0	0

Figure 14-9. SCI Control Register 2 (SCICR2)

Read: Anytime

Write: Anytime

Table 14-10. SCICR2 Field Descriptions

Field	Description
7 TIE	**Transmitter Interrupt Enable Bit** — TIE enables the transmit data register empty flag, TDRE, to generate interrupt requests. 0 TDRE interrupt requests disabled 1 TDRE interrupt requests enabled
6 TCIE	**Transmission Complete Interrupt Enable Bit** — TCIE enables the transmission complete flag, TC, to generate interrupt requests. 0 TC interrupt requests disabled 1 TC interrupt requests enabled
5 RIE	**Receiver Full Interrupt Enable Bit** — RIE enables the receive data register full flag, RDRF, or the overrun flag, OR, to generate interrupt requests. 0 RDRF and OR interrupt requests disabled 1 RDRF and OR interrupt requests enabled
4 ILIE	**Idle Line Interrupt Enable Bit** — ILIE enables the idle line flag, IDLE, to generate interrupt requests. 0 IDLE interrupt requests disabled 1 IDLE interrupt requests enabled
3 TE	**Transmitter Enable Bit** — TE enables the SCI transmitter and configures the TXD pin as being controlled by the SCI. The TE bit can be used to queue an idle preamble. 0 Transmitter disabled 1 Transmitter enabled
2 RE	**Receiver Enable Bit** — RE enables the SCI receiver. 0 Receiver disabled 1 Receiver enabled
1 RWU	**Receiver Wakeup Bit** — Standby state 0 Normal operation. 1 RWU enables the wakeup function and inhibits further receiver interrupt requests. Normally, hardware wakes the receiver by automatically clearing RWU.
0 SBK	**Send Break Bit** — Toggling SBK sends one break character (10 or 11 logic 0s, respectively 13 or 14 logics 0s if BRK13 is set). Toggling implies clearing the SBK bit before the break character has finished transmitting. As long as SBK is set, the transmitter continues to send complete break characters (10 or 11 bits, respectively 13 or 14 bits). 0 No break characters 1 Transmit break characters

14.3.2.7 SCI Status Register 1 (SCISR1)

The SCISR1 and SCISR2 registers provides inputs to the MCU for generation of SCI interrupts. Also, these registers can be polled by the MCU to check the status of these bits. The flag-clearing procedures require that the status register be read followed by a read or write to the SCI data register.It is permissible to execute other instructions between the two steps as long as it does not compromise the handling of I/O, but the order of operations is important for flag clearing.

Module Base + 0x0004

	7	6	5	4	3	2	1	0
R	TDRE	TC	RDRF	IDLE	OR	NF	FE	PF
W								
Reset	1	1	0	0	0	0	0	0

= Unimplemented or Reserved

Figure 14-10. SCI Status Register 1 (SCISR1)

Read: Anytime

Write: Has no meaning or effect

Table 14-11. SCISR1 Field Descriptions

Field	Description
7 TDRE	**Transmit Data Register Empty Flag** — TDRE is set when the transmit shift register receives a byte from the SCI data register. When TDRE is 1, the transmit data register (SCIDRH/L) is empty and can receive a new value to transmit.Clear TDRE by reading SCI status register 1 (SCISR1), with TDRE set and then writing to SCI data register low (SCIDRL). 0 No byte transferred to transmit shift register 1 Byte transferred to transmit shift register; transmit data register empty
6 TC	**Transmit Complete Flag** — TC is set low when there is a transmission in progress or when a preamble or break character is loaded. TC is set high when the TDRE flag is set and no data, preamble, or break character is being transmitted.When TC is set, the TXD pin becomes idle (logic 1). Clear TC by reading SCI status register 1 (SCISR1) with TC set and then writing to SCI data register low (SCIDRL). TC is cleared automatically when data, preamble, or break is queued and ready to be sent. TC is cleared in the event of a simultaneous set and clear of the TC flag (transmission not complete). 0 Transmission in progress 1 No transmission in progress
5 RDRF	**Receive Data Register Full Flag** — RDRF is set when the data in the receive shift register transfers to the SCI data register. Clear RDRF by reading SCI status register 1 (SCISR1) with RDRF set and then reading SCI data register low (SCIDRL). 0 Data not available in SCI data register 1 Received data available in SCI data register
4 IDLE	**Idle Line Flag** — IDLE is set when 10 consecutive logic 1s (if M = 0) or 11 consecutive logic 1s (if M =1) appear on the receiver input. Once the IDLE flag is cleared, a valid frame must again set the RDRF flag before an idle condition can set the IDLE flag.Clear IDLE by reading SCI status register 1 (SCISR1) with IDLE set and then reading SCI data register low (SCIDRL). 0 Receiver input is either active now or has never become active since the IDLE flag was last cleared 1 Receiver input has become idle **Note:** When the receiver wakeup bit (RWU) is set, an idle line condition does not set the IDLE flag.

Table 14-11. SCISR1 Field Descriptions (continued)

Field	Description
3 OR	**Overrun Flag** — OR is set when software fails to read the SCI data register before the receive shift register receives the next frame. The OR bit is set immediately after the stop bit has been completely received for the second frame. The data in the shift register is lost, but the data already in the SCI data registers is not affected. Clear OR by reading SCI status register 1 (SCISR1) with OR set and then reading SCI data register low (SCIDRL). 0 No overrun 1 Overrun **Note:** OR flag may read back as set when RDRF flag is clear. This may happen if the following sequence of events occurs: 1. After the first frame is received, read status register SCISR1 (returns RDRF set and OR flag clear); 2. Receive second frame without reading the first frame in the data register (the second frame is not received and OR flag is set); 3. Read data register SCIDRL (returns first frame and clears RDRF flag in the status register); 4. Read status register SCISR1 (returns RDRF clear and OR set). Event 3 may be at exactly the same time as event 2 or any time after. When this happens, a dummy SCIDRL read following event 4 will be required to clear the OR flag if further frames are to be received.
2 NF	**Noise Flag** — NF is set when the SCI detects noise on the receiver input. NF bit is set during the same cycle as the RDRF flag but does not get set in the case of an overrun. Clear NF by reading SCI status register 1(SCISR1), and then reading SCI data register low (SCIDRL). 0 No noise 1 Noise
1 FE	**Framing Error Flag** — FE is set when a logic 0 is accepted as the stop bit. FE bit is set during the same cycle as the RDRF flag but does not get set in the case of an overrun. FE inhibits further data reception until it is cleared. Clear FE by reading SCI status register 1 (SCISR1) with FE set and then reading the SCI data register low (SCIDRL). 0 No framing error 1 Framing error
0 PF	**Parity Error Flag** — PF is set when the parity enable bit (PE) is set and the parity of the received data does not match the parity type bit (PT). PF bit is set during the same cycle as the RDRF flag but does not get set in the case of an overrun. Clear PF by reading SCI status register 1 (SCISR1), and then reading SCI data register low (SCIDRL). 0 No parity error 1 Parity error

14.3.2.8 SCI Status Register 2 (SCISR2)

Module Base + 0x0005

	7	6	5	4	3	2	1	0
R	AMAP	0	0	TXPOL	RXPOL	BRK13	TXDIR	RAF
W								
Reset	0	0	0	0	0	0	0	0

= Unimplemented or Reserved

Figure 14-11. SCI Status Register 2 (SCISR2)

Read: Anytime

Write: Anytime

Table 14-12. SCISR2 Field Descriptions

Field	Description
7 AMAP	**Alternative Map** — This bit controls which registers sharing the same address space are accessible. In the reset condition the SCI behaves as previous versions. Setting AMAP=1 allows the access to another set of control and status registers and hides the baud rate and SCI control Register 1. 0 The registers labelled SCIBDH (0x0000),SCIBDL (0x0001), SCICR1 (0x0002) are accessible 1 The registers labelled SCIASR1 (0x0000),SCIACR1 (0x0001), SCIACR2 (0x00002) are accessible
4 TXPOL	**Transmit Polarity** — This bit control the polarity of the transmitted data. In NRZ format, a one is represented by a mark and a zero is represented by a space for normal polarity, and the opposite for inverted polarity. In IrDA format, a zero is represented by short high pulse in the middle of a bit time remaining idle low for a one for normal polarity, and a zero is represented by short low pulse in the middle of a bit time remaining idle high for a one for inverted polarity. 0 Normal polarity 1 Inverted polarity
3 RXPOL	**Receive Polarity** — This bit control the polarity of the received data. In NRZ format, a one is represented by a mark and a zero is represented by a space for normal polarity, and the opposite for inverted polarity. In IrDA format, a zero is represented by short high pulse in the middle of a bit time remaining idle low for a one for normal polarity, and a zero is represented by short low pulse in the middle of a bit time remaining idle high for a one for inverted polarity. 0 Normal polarity 1 Inverted polarity
2 BRK13	**Break Transmit Character Length** — This bit determines whether the transmit break character is 10 or 11 bit respectively 13 or 14 bits long. The detection of a framing error is not affected by this bit. 0 Break character is 10 or 11 bit long 1 Break character is 13 or 14 bit long
1 TXDIR	**Transmitter Pin Data Direction in Single-Wire Mode** — This bit determines whether the TXD pin is going to be used as an input or output, in the single-wire mode of operation. This bit is only relevant in the single-wire mode of operation. 0 TXD pin to be used as an input in single-wire mode 1 TXD pin to be used as an output in single-wire mode
0 RAF	**Receiver Active Flag** — RAF is set when the receiver detects a logic 0 during the RT1 time period of the start bit search. RAF is cleared when the receiver detects an idle character. 0 No reception in progress 1 Reception in progress

14.3.2.9 SCI Data Registers (SCIDRH, SCIDRL)

Module Base + 0x0006

	7	6	5	4	3	2	1	0
R	R8	T8	0	0	0	0	0	0
W								
Reset	0	0	0	0	0	0	0	0

= Unimplemented or Reserved

Figure 14-12. SCI Data Registers (SCIDRH)

Module Base + 0x0007

	7	6	5	4	3	2	1	0
R	R7	R6	R5	R4	R3	R2	R1	R0
W	T7	T6	T5	T4	T3	T2	T1	T0
Reset	0	0	0	0	0	0	0	0

Figure 14-13. SCI Data Registers (SCIDRL)

Read: Anytime; reading accesses SCI receive data register

Write: Anytime; writing accesses SCI transmit data register; writing to R8 has no effect

Table 14-13. SCIDRH and SCIDRL Field Descriptions

Field	Description
SCIDRH 7 R8	**Received Bit 8** — R8 is the ninth data bit received when the SCI is configured for 9-bit data format (M = 1).
SCIDRH 6 T8	**Transmit Bit 8** — T8 is the ninth data bit transmitted when the SCI is configured for 9-bit data format (M = 1).
SCIDRL 7:0 R[7:0] T[7:0]	**R7:R0** — Received bits seven through zero for 9-bit or 8-bit data formats **T7:T0** — Transmit bits seven through zero for 9-bit or 8-bit formats

NOTE

If the value of T8 is the same as in the previous transmission, T8 does not have to be rewritten.The same value is transmitted until T8 is rewritten

In 8-bit data format, only SCI data register low (SCIDRL) needs to be accessed.

When transmitting in 9-bit data format and using 8-bit write instructions, write first to SCI data register high (SCIDRH), then SCIDRL.

14.4 Functional Description

This section provides a complete functional description of the SCI block, detailing the operation of the design from the end user perspective in a number of subsections.

Figure 14-14 shows the structure of the SCI module. The SCI allows full duplex, asynchronous, serial communication between the CPU and remote devices, including other CPUs. The SCI transmitter and receiver operate independently, although they use the same baud rate generator. The CPU monitors the status of the SCI, writes the data to be transmitted, and processes received data.

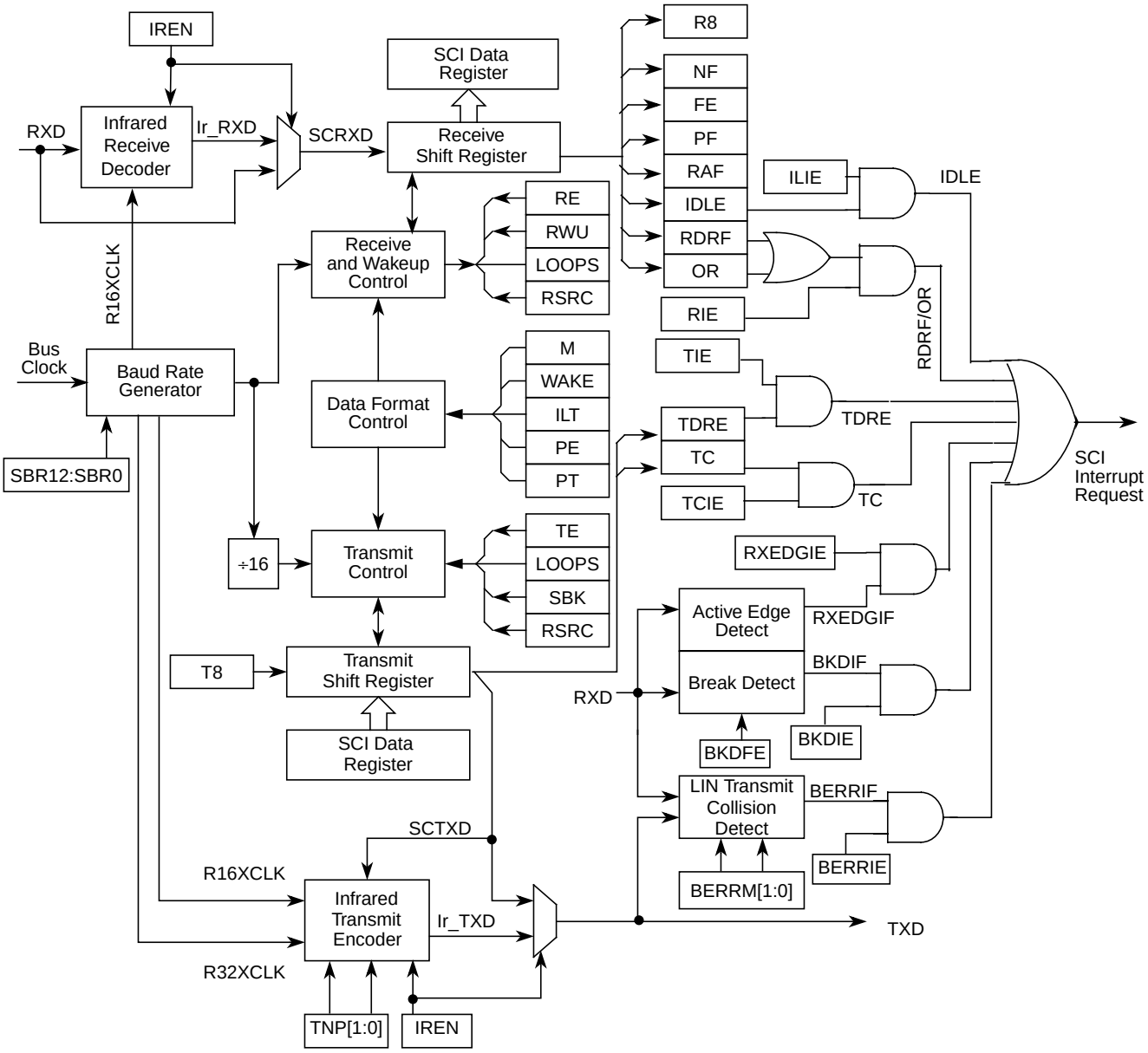

Figure 14-14. Detailed SCI Block Diagram

14.4.1 Infrared Interface Submodule

This module provides the capability of transmitting narrow pulses to an IR LED and receiving narrow pulses and transforming them to serial bits, which are sent to the SCI. The IrDA physical layer specification defines a half-duplex infrared communication link for exchange data. The full standard includes data rates up to 16 Mbits/s. This design covers only data rates between 2.4 Kbits/s and 115.2 Kbits/s.

The infrared submodule consists of two major blocks: the transmit encoder and the receive decoder. The SCI transmits serial bits of data which are encoded by the infrared submodule to transmit a narrow pulse for every zero bit. No pulse is transmitted for every one bit. When receiving data, the IR pulses should be detected using an IR photo diode and transformed to CMOS levels by the IR receive decoder (external from the MCU). The narrow pulses are then stretched by the infrared submodule to get back to a serial bit stream to be received by the SCI.The polarity of transmitted pulses and expected receive pulses can be inverted so that a direct connection can be made to external IrDA transceiver modules that uses active low pulses.

The infrared submodule receives its clock sources from the SCI. One of these two clocks are selected in the infrared submodule in order to generate either 3/16, 1/16, 1/32 or 1/4 narrow pulses during transmission. The infrared block receives two clock sources from the SCI, R16XCLK and R32XCLK, which are configured to generate the narrow pulse width during transmission. The R16XCLK and R32XCLK are internal clocks with frequencies 16 and 32 times the baud rate respectively. Both R16XCLK and R32XCLK clocks are used for transmitting data. The receive decoder uses only the R16XCLK clock.

14.4.1.1 Infrared Transmit Encoder

The infrared transmit encoder converts serial bits of data from transmit shift register to the TXD pin. A narrow pulse is transmitted for a zero bit and no pulse for a one bit. The narrow pulse is sent in the middle of the bit with a duration of 1/32, 1/16, 3/16 or 1/4 of a bit time. A narrow high pulse is transmitted for a zero bit when TXPOL is cleared, while a narrow low pulse is transmitted for a zero bit when TXPOL is set.

14.4.1.2 Infrared Receive Decoder

The infrared receive block converts data from the RXD pin to the receive shift register. A narrow pulse is expected for each zero received and no pulse is expected for each one received. A narrow high pulse is expected for a zero bit when RXPOL is cleared, while a narrow low pulse is expected for a zero bit when RXPOL is set. This receive decoder meets the edge jitter requirement as defined by the IrDA serial infrared physical layer specification.

14.4.2 LIN Support

This module provides some basic support for the LIN protocol. At first this is a break detect circuitry making it easier for the LIN software to distinguish a break character from an incoming data stream. As a further addition is supports a collision detection at the bit level as well as cancelling pending transmissions.

14.4.3 Data Format

The SCI uses the standard NRZ mark/space data format. When Infrared is enabled, the SCI uses RZI data format where zeroes are represented by light pulses and ones remain low. See Figure 14-15 below.

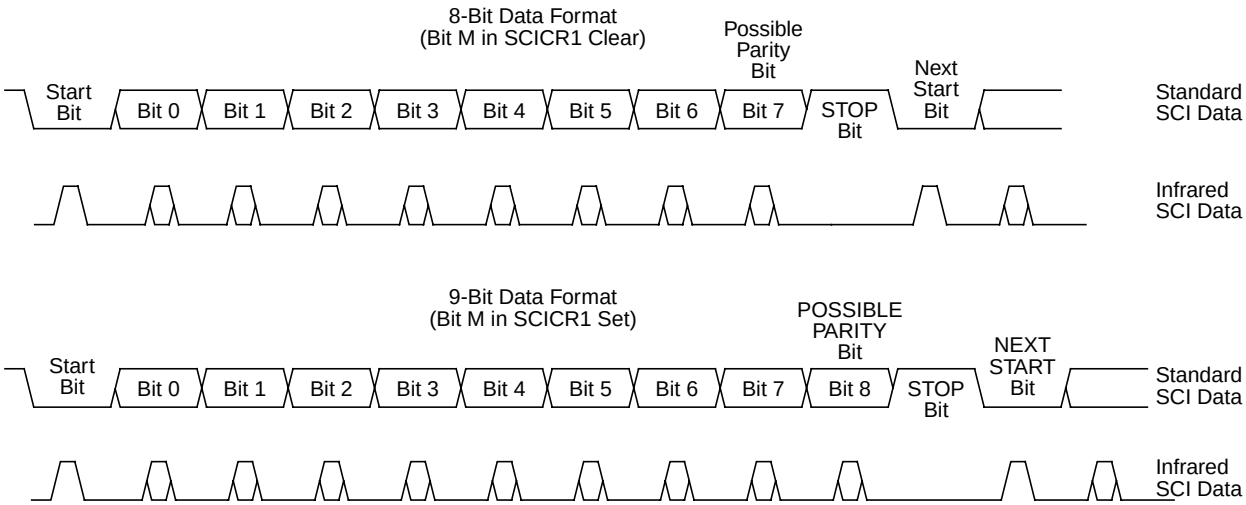

Figure 14-15. SCI Data Formats

Each data character is contained in a frame that includes a start bit, eight or nine data bits, and a stop bit. Clearing the M bit in SCI control register 1 configures the SCI for 8-bit data characters. A frame with eight data bits has a total of 10 bits. Setting the M bit configures the SCI for nine-bit data characters. A frame with nine data bits has a total of 11 bits.

Table 14-14. Example of 8-Bit Data Formats

Start Bit	Data Bits	Address Bits	Parity Bits	Stop Bit
1	8	0	0	1
1	7	0	1	1
1	7	1[1]	0	1

[1] The address bit identifies the frame as an address character. See Section 14.4.6.6, “Receiver Wakeup”.

When the SCI is configured for 9-bit data characters, the ninth data bit is the T8 bit in SCI data register high (SCIDRH). It remains unchanged after transmission and can be used repeatedly without rewriting it. A frame with nine data bits has a total of 11 bits.

Table 14-15. Example of 9-Bit Data Formats

Start Bit	Data Bits	Address Bits	Parity Bits	Stop Bit
1	9	0	0	1
1	8	0	1	1
1	8	1[1]	0	1

[1] The address bit identifies the frame as an address character. See Section 14.4.6.6, “Receiver Wakeup”.

14.4.4 Baud Rate Generation

A 13-bit modulus counter in the baud rate generator derives the baud rate for both the receiver and the transmitter. The value from 0 to 8191 written to the SBR12:SBR0 bits determines the bus clock divisor. The SBR bits are in the SCI baud rate registers (SCIBDH and SCIBDL). The baud rate clock is synchronized with the bus clock and drives the receiver. The baud rate clock divided by 16 drives the transmitter. The receiver has an acquisition rate of 16 samples per bit time.

Baud rate generation is subject to one source of error:

- Integer division of the bus clock may not give the exact target frequency.

Table 14-16 lists some examples of achieving target baud rates with a bus clock frequency of 25 MHz.

When IREN = 0 then,

SCI baud rate = SCI bus clock / (16 * SCIBR[12:0])

Table 14-16. Baud Rates (Example: Bus Clock = 25 MHz)

Bits SBR[12:0]	Receiver Clock (Hz)	Transmitter Clock (Hz)	Target Baud Rate	Error (%)
41	609,756.1	38,109.8	38,400	.76
81	308,642.0	19,290.1	19,200	.47
163	153,374.2	9585.9	9,600	.16
326	76,687.1	4792.9	4,800	.15
651	38,402.5	2400.2	2,400	.01
1302	19,201.2	1200.1	1,200	.01
2604	9600.6	600.0	600	.00
5208	4800.0	300.0	300	.00

14.4.5 Transmitter

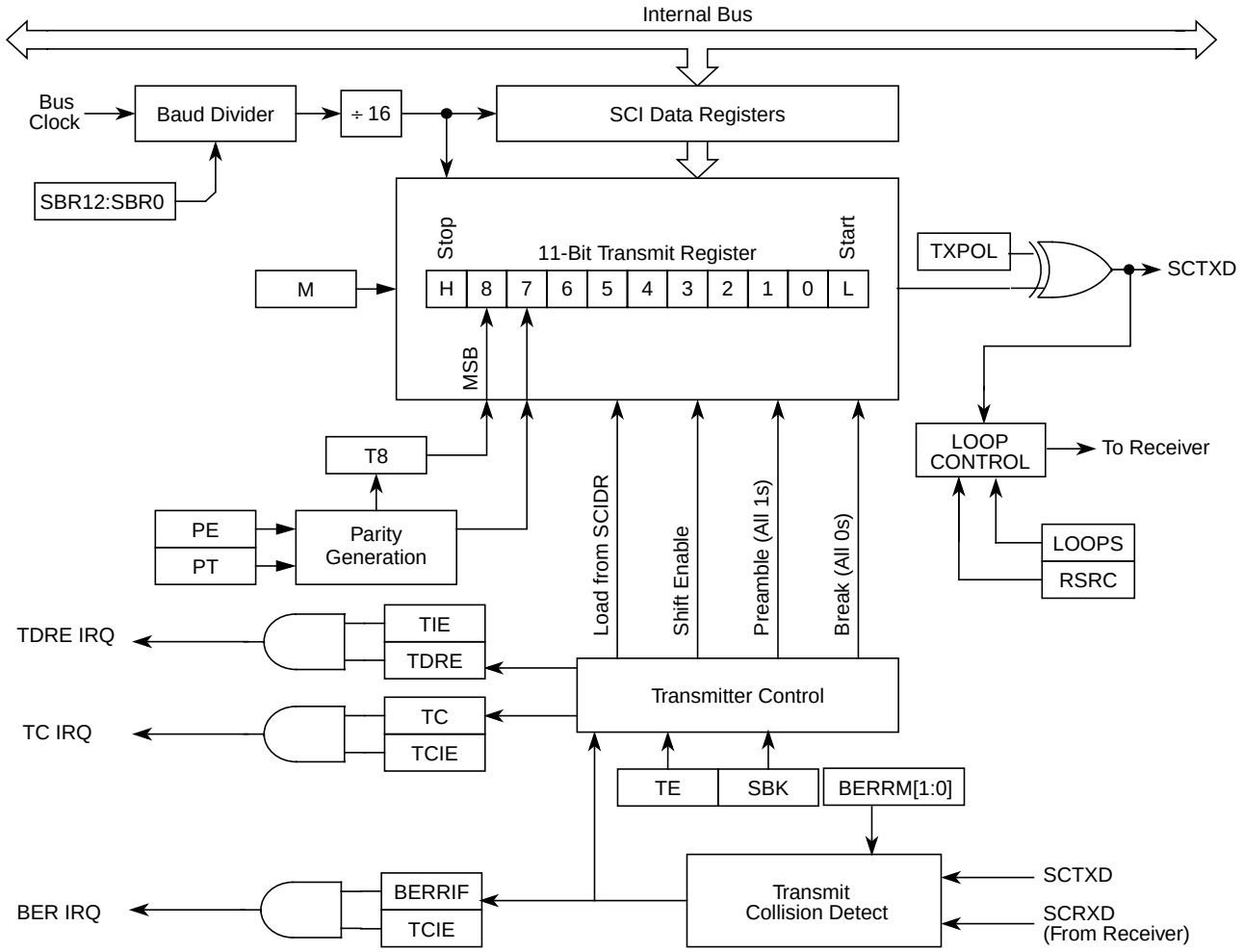

Figure 14-16. Transmitter Block Diagram

14.4.5.1 Transmitter Character Length

The SCI transmitter can accommodate either 8-bit or 9-bit data characters. The state of the M bit in SCI control register 1 (SCICR1) determines the length of data characters. When transmitting 9-bit data, bit T8 in SCI data register high (SCIDRH) is the ninth bit (bit 8).

14.4.5.2 Character Transmission

To transmit data, the MCU writes the data bits to the SCI data registers (SCIDRH/SCIDRL), which in turn are transferred to the transmitter shift register. The transmit shift register then shifts a frame out through the TXD pin, after it has prefaced them with a start bit and appended them with a stop bit. The SCI data registers (SCIDRH and SCIDRL) are the write-only buffers between the internal data bus and the transmit shift register.

The SCI also sets a flag, the transmit data register empty flag (TDRE), every time it transfers data from the buffer (SCIDRH/L) to the transmitter shift register.The transmit driver routine may respond to this flag by writing another byte to the Transmitter buffer (SCIDRH/SCIDRL), while the shift register is still shifting out the first byte.

To initiate an SCI transmission:

1. Configure the SCI:
   a) Select a baud rate. Write this value to the SCI baud registers (SCIBDH/L) to begin the baud rate generator. Remember that the baud rate generator is disabled when the baud rate is zero. Writing to the SCIBDH has no effect without also writing to SCIBDL.
   b) Write to SCICR1 to configure word length, parity, and other configuration bits (LOOPS,RSRC,M,WAKE,ILT,PE,PT).
   c) Enable the transmitter, interrupts, receive, and wake up as required, by writing to the SCICR2 register bits (TIE,TCIE,RIE,ILIE,TE,RE,RWU,SBK). A preamble or idle character will now be shifted out of the transmitter shift register.
2. Transmit Procedure for each byte:
   a) Poll the TDRE flag by reading the SCISR1 or responding to the TDRE interrupt. Keep in mind that the TDRE bit resets to one.
   b) If the TDRE flag is set, write the data to be transmitted to SCIDRH/L, where the ninth bit is written to the T8 bit in SCIDRH if the SCI is in 9-bit data format. A new transmission will not result until the TDRE flag has been cleared.
3. Repeat step 2 for each subsequent transmission.

NOTE

The TDRE flag is set when the shift register is loaded with the next data to be transmitted from SCIDRH/L, which happens, generally speaking, a little over half-way through the stop bit of the previous frame. Specifically, this transfer occurs 9/16ths of a bit time AFTER the start of the stop bit of the previous frame.

Writing the TE bit from 0 to a 1 automatically loads the transmit shift register with a preamble of 10 logic 1s (if M = 0) or 11 logic 1s (if M = 1). After the preamble shifts out, control logic transfers the data from the SCI data register into the transmit shift register. A logic 0 start bit automatically goes into the least significant bit position of the transmit shift register. A logic 1 stop bit goes into the most significant bit position.

Hardware supports odd or even parity. When parity is enabled, the most significant bit (MSB) of the data character is the parity bit.

The transmit data register empty flag, TDRE, in SCI status register 1 (SCISR1) becomes set when the SCI data register transfers a byte to the transmit shift register. The TDRE flag indicates that the SCI data register can accept new data from the internal data bus. If the transmit interrupt enable bit, TIE, in SCI control register 2 (SCICR2) is also set, the TDRE flag generates a transmitter interrupt request.

When the transmit shift register is not transmitting a frame, the TXD pin goes to the idle condition, logic 1. If at any time software clears the TE bit in SCI control register 2 (SCICR2), the transmitter enable signal goes low and the transmit signal goes idle.

If software clears TE while a transmission is in progress (TC = 0), the frame in the transmit shift register continues to shift out. To avoid accidentally cutting off the last frame in a message, always wait for TDRE to go high after the last frame before clearing TE.

To separate messages with preambles with minimum idle line time, use this sequence between messages:

1. Write the last byte of the first message to SCIDRH/L.
2. Wait for the TDRE flag to go high, indicating the transfer of the last frame to the transmit shift register.
3. Queue a preamble by clearing and then setting the TE bit.
4. Write the first byte of the second message to SCIDRH/L.

14.4.5.3 Break Characters

Writing a logic 1 to the send break bit, SBK, in SCI control register 2 (SCICR2) loads the transmit shift register with a break character. A break character contains all logic 0s and has no start, stop, or parity bit. Break character length depends on the M bit in SCI control register 1 (SCICR1). As long as SBK is at logic 1, transmitter logic continuously loads break characters into the transmit shift register. After software clears the SBK bit, the shift register finishes transmitting the last break character and then transmits at least one logic 1. The automatic logic 1 at the end of a break character guarantees the recognition of the start bit of the next frame.

The SCI recognizes a break character when there are 10 or 11(M = 0 or M = 1) consecutive zero received. Depending if the break detect feature is enabled or not receiving a break character has these effects on SCI registers.

If the break detect feature is disabled (BKDFE = 0):

- Sets the framing error flag, FE
- Sets the receive data register full flag, RDRF
- Clears the SCI data registers (SCIDRH/L)
- May set the overrun flag, OR, noise flag, NF, parity error flag, PE, or the receiver active flag, RAF (see 3.4.4 and 3.4.5 SCI Status Register 1 and 2)

If the break detect feature is enabled (BKDFE = 1) there are two scenarios[1]

The break is detected right from a start bit or is detected during a byte reception.

- Sets the break detect interrupt flag, BKDIF
- Does not change the data register full flag, RDRF or overrun flag OR
- Does not change the framing error flag FE, parity error flag PE.
- Does not clear the SCI data registers (SCIDRH/L)
- May set noise flag NF, or receiver active flag RAF.

1. A Break character in this context are either 10 or 11 consecutive zero received bits

Figure 14-17 shows two cases of break detect. In trace RXD_1 the break symbol starts with the start bit, while in RXD_2 the break starts in the middle of a transmission. If BRKDFE = 1, in RXD_1 case there will be no byte transferred to the receive buffer and the RDRF flag will not be modified. Also no framing error or parity error will be flagged from this transfer. In RXD_2 case, however the break signal starts later during the transmission. At the expected stop bit position the byte received so far will be transferred to the receive buffer, the receive data register full flag will be set, a framing error and if enabled and appropriate a parity error will be set. Once the break is detected the BRKDIF flag will be set.

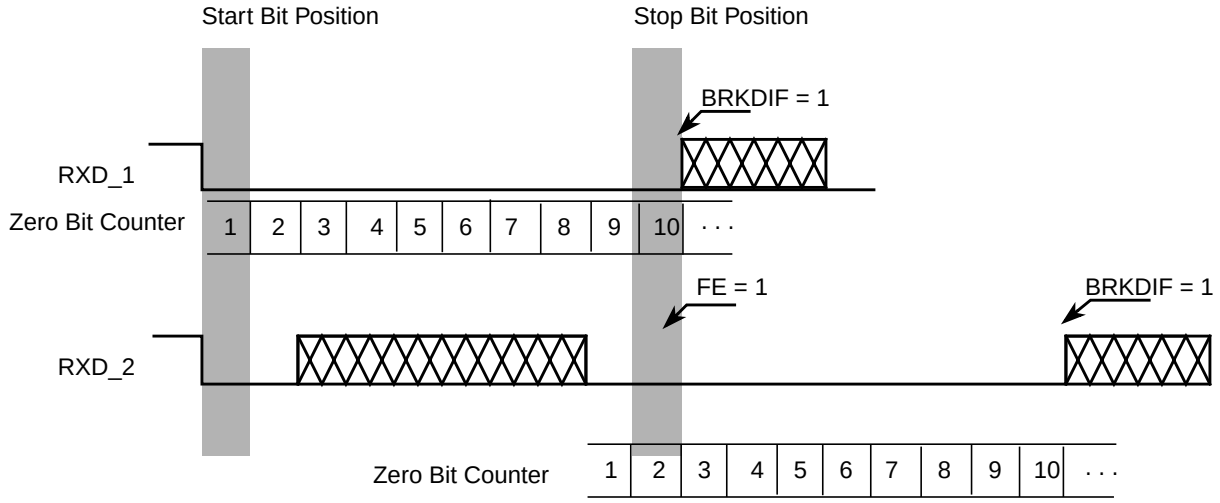

Figure 14-17. Break Detection if BRKDFE = 1 (M = 0)

14.4.5.4 Idle Characters

An idle character (or preamble) contains all logic 1s and has no start, stop, or parity bit. Idle character length depends on the M bit in SCI control register 1 (SCICR1). The preamble is a synchronizing idle character that begins the first transmission initiated after writing the TE bit from 0 to 1.

If the TE bit is cleared during a transmission, the TXD pin becomes idle after completion of the transmission in progress. Clearing and then setting the TE bit during a transmission queues an idle character to be sent after the frame currently being transmitted.

NOTE

When queueing an idle character, return the TE bit to logic 1 before the stop bit of the current frame shifts out through the TXD pin. Setting TE after the stop bit appears on TXD causes data previously written to the SCI data register to be lost. Toggle the TE bit for a queued idle character while the TDRE flag is set and immediately before writing the next byte to the SCI data register.

If the TE bit is clear and the transmission is complete, the SCI is not the master of the TXD pin

14.4.5.5 LIN Transmit Collision Detection

This module allows to check for collisions on the LIN bus.

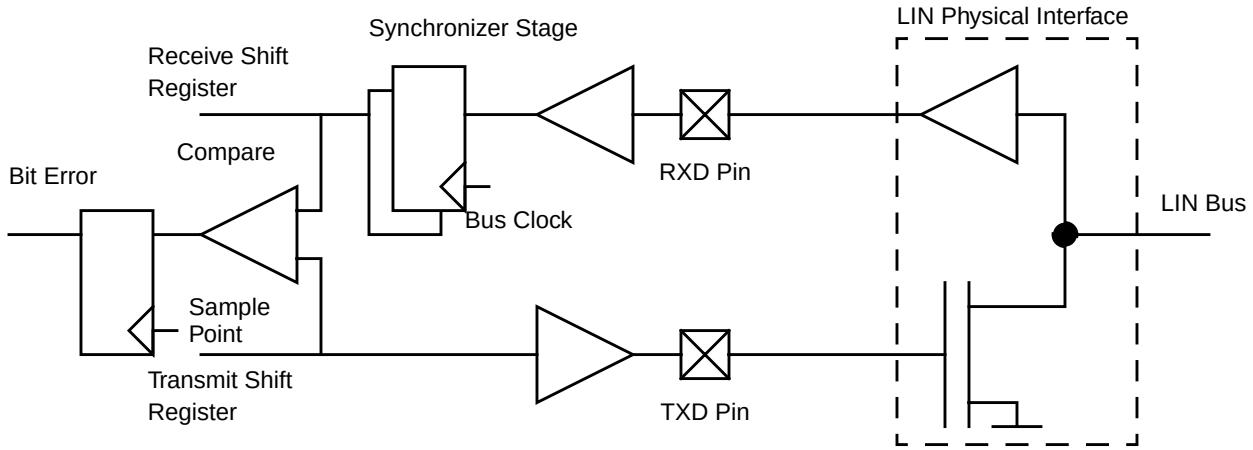

Figure 14-18. Collision Detect Principle

If the bit error circuit is enabled (BERRM[1:0] = 0:1 or = 1:0]), the error detect circuit will compare the transmitted and the received data stream at a point in time and flag any mismatch. The timing checks run when transmitter is active (not idle). As soon as a mismatch between the transmitted data and the received data is detected the following happens:

- The next bit transmitted will have a high level (TXPOL = 0) or low level (TXPOL = 1)
- The transmission is aborted and the byte in transmit buffer is discarded.
- the transmit data register empty and the transmission complete flag will be set
- The bit error interrupt flag, BERRIF, will be set.
- No further transmissions will take place until the BERRIF is cleared.

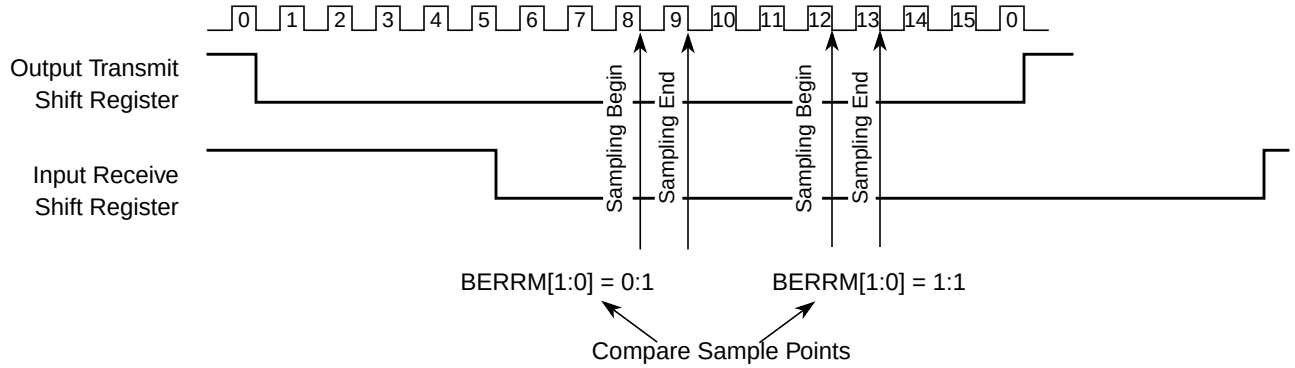

Figure 14-19. Timing Diagram Bit Error Detection

If the bit error detect feature is disabled, the bit error interrupt flag is cleared.

NOTE

The RXPOL and TXPOL bit should be set the same when transmission collision detect feature is enabled, otherwise the bit error interrupt flag may be set incorrectly.

14.4.6 Receiver

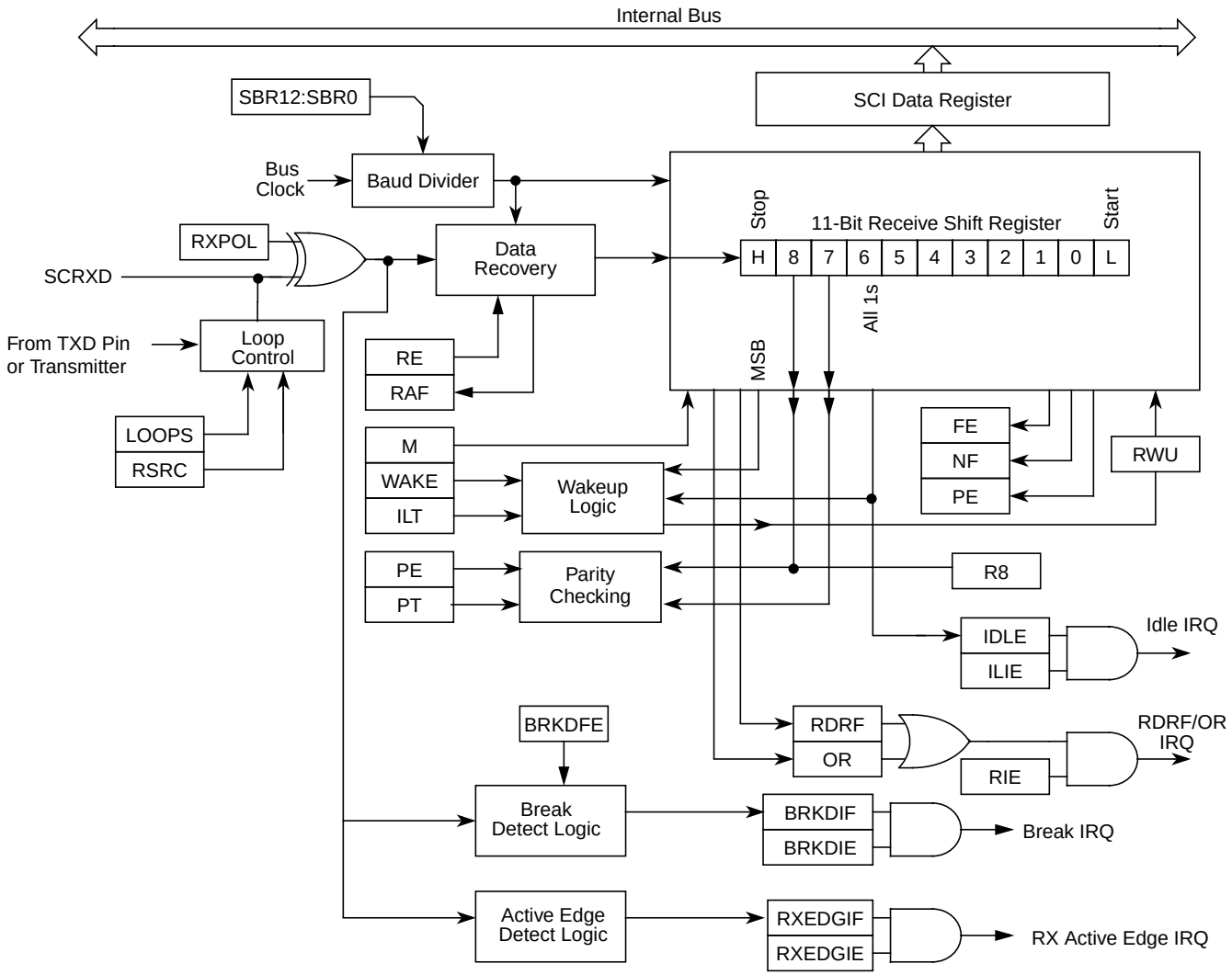

Figure 14-20. SCI Receiver Block Diagram

14.4.6.1 Receiver Character Length

The SCI receiver can accommodate either 8-bit or 9-bit data characters. The state of the M bit in SCI control register 1 (SCICR1) determines the length of data characters. When receiving 9-bit data, bit R8 in SCI data register high (SCIDRH) is the ninth bit (bit 8).

14.4.6.2 Character Reception

During an SCI reception, the receive shift register shifts a frame in from the RXD pin. The SCI data register is the read-only buffer between the internal data bus and the receive shift register.

After a complete frame shifts into the receive shift register, the data portion of the frame transfers to the SCI data register. The receive data register full flag, RDRF, in SCI status register 1 (SCISR1) becomes set,

indicating that the received byte can be read. If the receive interrupt enable bit, RIE, in SCI control register 2 (SCICR2) is also set, the RDRF flag generates an RDRF interrupt request.

14.4.6.3 Data Sampling

The RT clock rate. The RT clock is an internal signal with a frequency 16 times the baud rate. To adjust for baud rate mismatch, the RT clock (see Figure 14-21) is re-synchronized:

- After every start bit
- After the receiver detects a data bit change from logic 1 to logic 0 (after the majority of data bit samples at RT8, RT9, and RT10 returns a valid logic 1 and the majority of the next RT8, RT9, and RT10 samples returns a valid logic 0)

To locate the start bit, data recovery logic does an asynchronous search for a logic 0 preceded by three logic 1s.When the falling edge of a possible start bit occurs, the RT clock begins to count to 16.

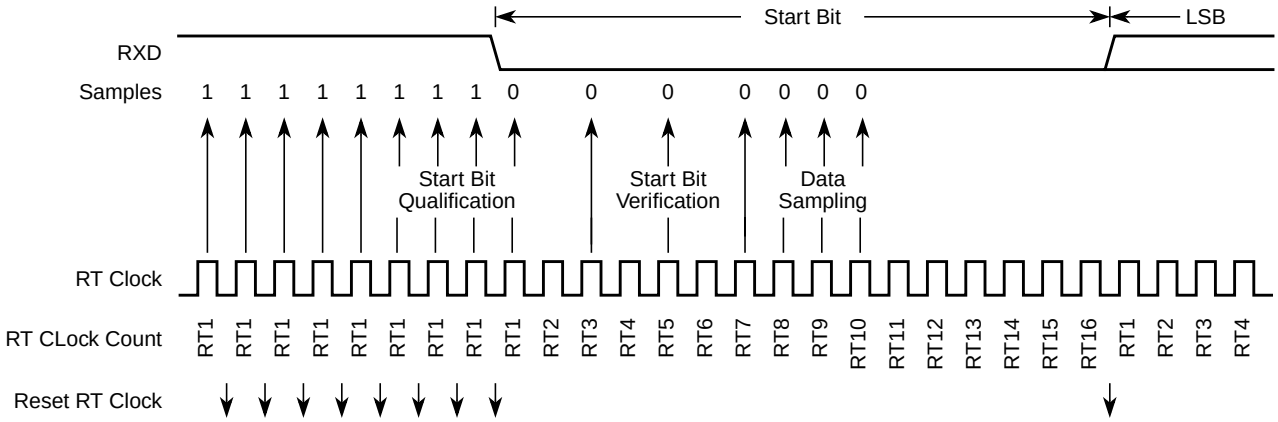

Figure 14-21. Receiver Data Sampling

To verify the start bit and to detect noise, data recovery logic takes samples at RT3, RT5, and RT7. Figure 14-17 summarizes the results of the start bit verification samples.

Table 14-17. Start Bit Verification

RT3, RT5, and RT7 Samples	Start Bit Verification	Noise Flag
000	Yes	0
001	Yes	1
010	Yes	1
011	No	0
100	Yes	1
101	No	0
110	No	0
111	No	0

If start bit verification is not successful, the RT clock is reset and a new search for a start bit begins.

To determine the value of a data bit and to detect noise, recovery logic takes samples at RT8, RT9, and RT10. Table 14-18 summarizes the results of the data bit samples.

Table 14-18. Data Bit Recovery

RT8, RT9, and RT10 Samples	Data Bit Determination	Noise Flag
000	0	0
001	0	1
010	0	1
011	1	1
100	0	1
101	1	1
110	1	1
111	1	0

NOTE

The RT8, RT9, and RT10 samples do not affect start bit verification. If any or all of the RT8, RT9, and RT10 start bit samples are logic 1s following a successful start bit verification, the noise flag (NF) is set and the receiver assumes that the bit is a start bit (logic 0).

To verify a stop bit and to detect noise, recovery logic takes samples at RT8, RT9, and RT10. Table 14-19 summarizes the results of the stop bit samples.

Table 14-19. Stop Bit Recovery

RT8, RT9, and RT10 Samples	Framing Error Flag	Noise Flag
000	1	0
001	1	1
010	1	1
011	0	1
100	1	1
101	0	1
110	0	1
111	0	0

In Figure 14-22 the verification samples RT3 and RT5 determine that the first low detected was noise and not the beginning of a start bit. The RT clock is reset and the start bit search begins again. The noise flag is not set because the noise occurred before the start bit was found.

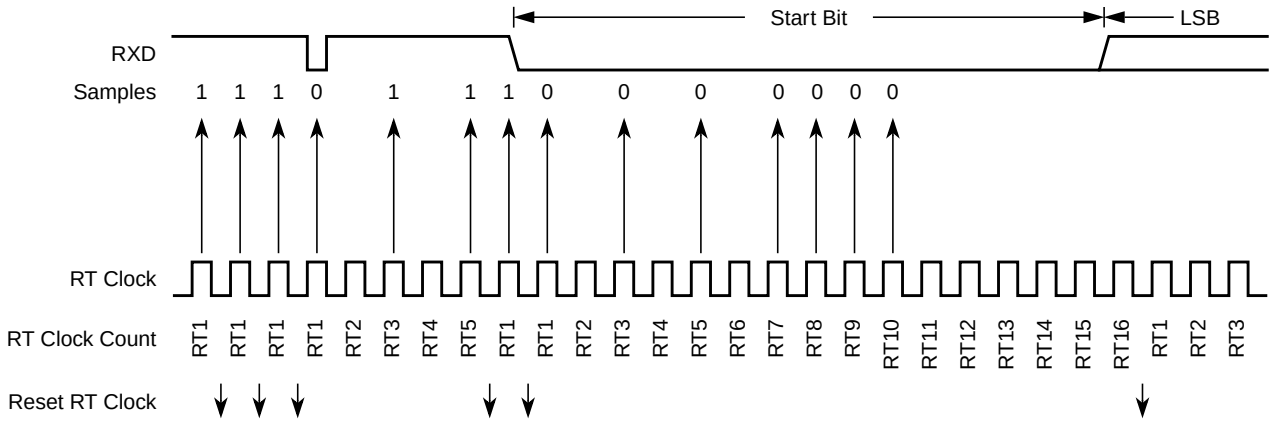

Figure 14-22. Start Bit Search Example 1

In Figure 14-23, verification sample at RT3 is high. The RT3 sample sets the noise flag. Although the perceived bit time is misaligned, the data samples RT8, RT9, and RT10 are within the bit time and data recovery is successful.

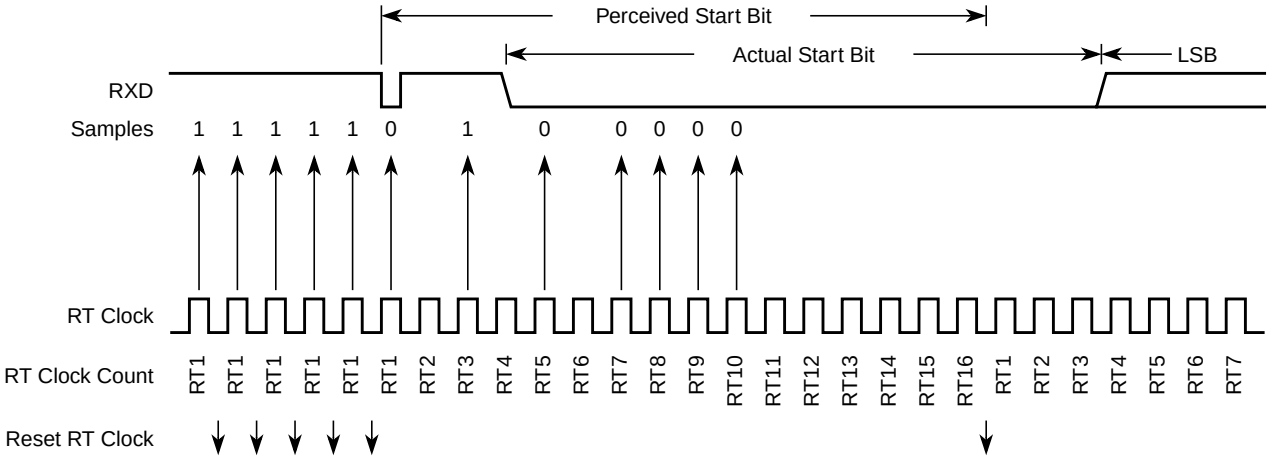

Figure 14-23. Start Bit Search Example 2

In Figure 14-24, a large burst of noise is perceived as the beginning of a start bit, although the test sample at RT5 is high. The RT5 sample sets the noise flag. Although this is a worst-case misalignment of perceived bit time, the data samples RT8, RT9, and RT10 are within the bit time and data recovery is successful.

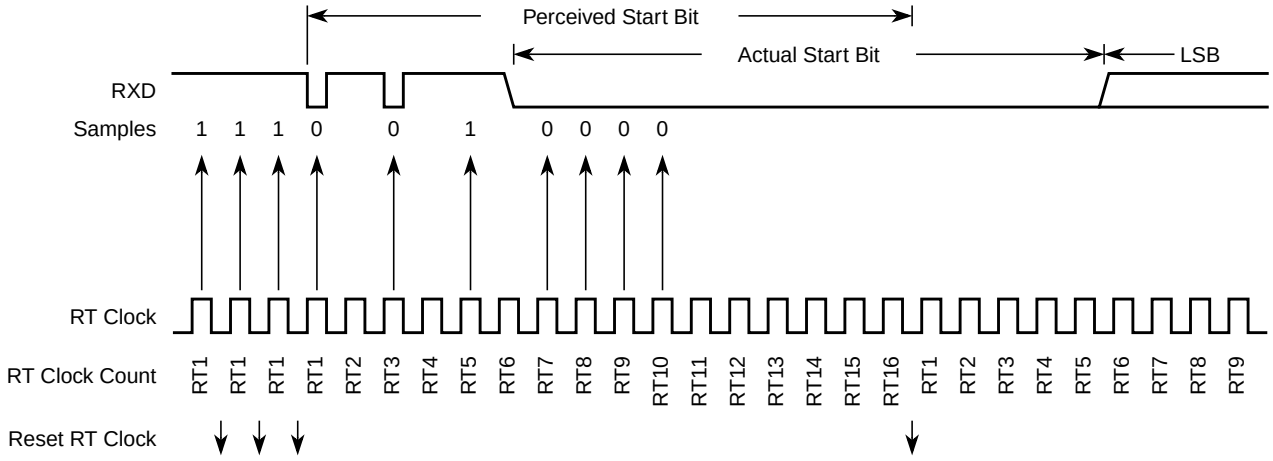

Figure 14-24. Start Bit Search Example 3

Figure 14-25 shows the effect of noise early in the start bit time. Although this noise does not affect proper synchronization with the start bit time, it does set the noise flag.

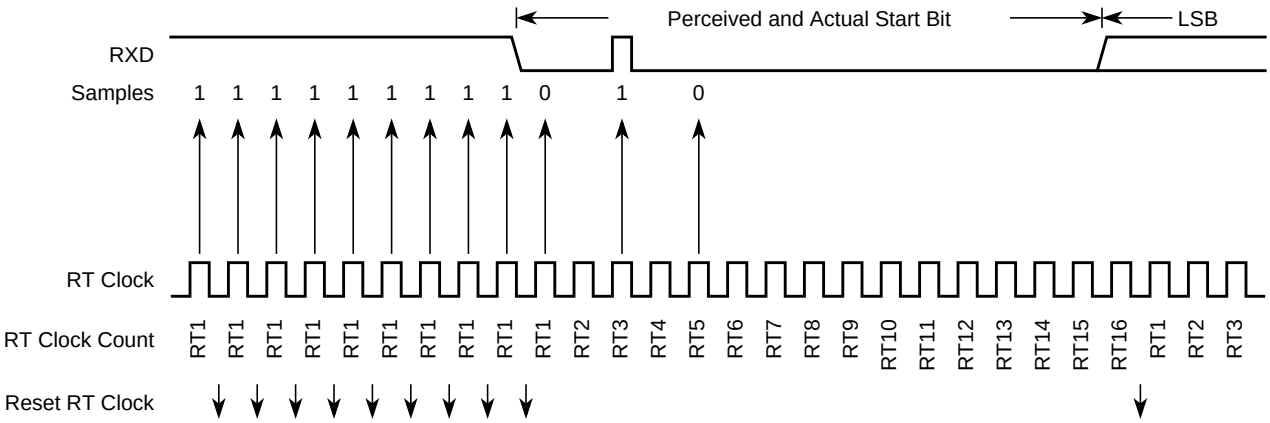

Figure 14-25. Start Bit Search Example 4

Figure 14-26 shows a burst of noise near the beginning of the start bit that resets the RT clock. The sample after the reset is low but is not preceded by three high samples that would qualify as a falling edge. Depending on the timing of the start bit search and on the data, the frame may be missed entirely or it may set the framing error flag.

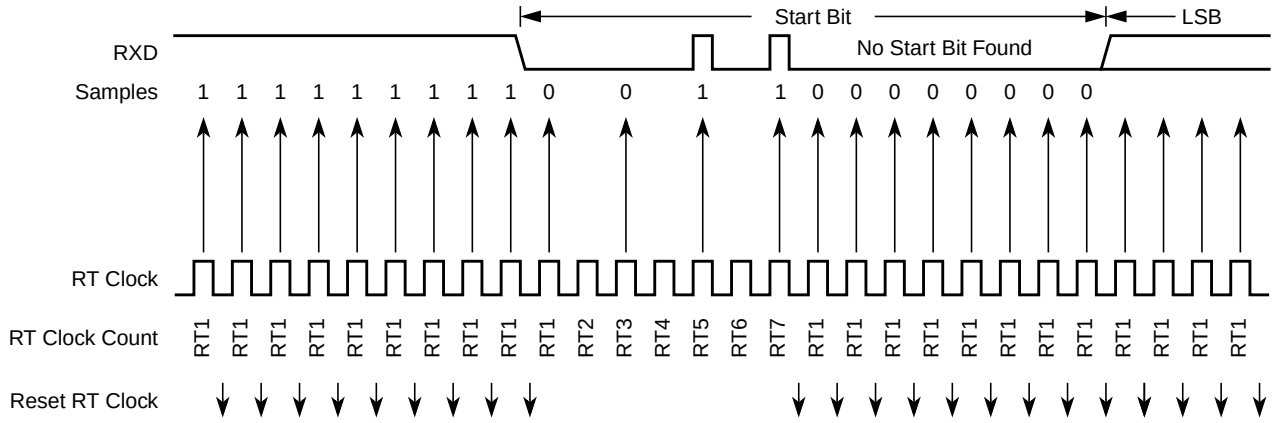

Figure 14-26. Start Bit Search Example 5

In Figure 14-27, a noise burst makes the majority of data samples RT8, RT9, and RT10 high. This sets the noise flag but does not reset the RT clock. In start bits only, the RT8, RT9, and RT10 data samples are ignored.

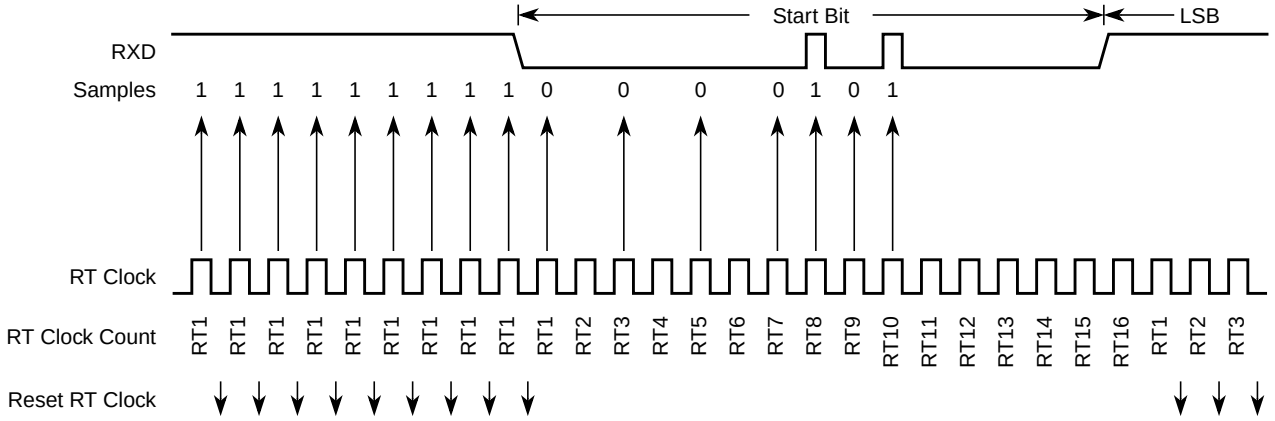

Figure 14-27. Start Bit Search Example 6

14.4.6.4 Framing Errors

If the data recovery logic does not detect a logic 1 where the stop bit should be in an incoming frame, it sets the framing error flag, FE, in SCI status register 1 (SCISR1). A break character also sets the FE flag because a break character has no stop bit. The FE flag is set at the same time that the RDRF flag is set.

14.4.6.5 Baud Rate Tolerance

A transmitting device may be operating at a baud rate below or above the receiver baud rate. Accumulated bit time misalignment can cause one of the three stop bit data samples (RT8, RT9, and RT10) to fall outside the actual stop bit. A noise error will occur if the RT8, RT9, and RT10 samples are not all the same logical values. A framing error will occur if the receiver clock is misaligned in such a way that the majority of the RT8, RT9, and RT10 stop bit samples are a logic zero.

As the receiver samples an incoming frame, it re-synchronizes the RT clock on any valid falling edge within the frame. Re synchronization within frames will correct a misalignment between transmitter bit times and receiver bit times.

14.4.6.5.1 Slow Data Tolerance

Figure 14-28 shows how much a slow received frame can be misaligned without causing a noise error or a framing error. The slow stop bit begins at RT8 instead of RT1 but arrives in time for the stop bit data samples at RT8, RT9, and RT10.

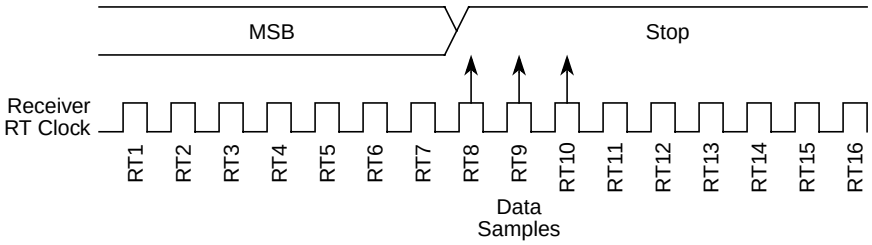

Figure 14-28. Slow Data

Let's take RTr as receiver RT clock and RTt as transmitter RT clock.

For an 8-bit data character, it takes the receiver 9 bit times x 16 RTr cycles +7 RTr cycles = 151 RTr cycles to start data sampling of the stop bit.

With the misaligned character shown in Figure 14-28, the receiver counts 151 RTr cycles at the point when the count of the transmitting device is 9 bit times x 16 RTt cycles = 144 RTt cycles.

The maximum percent difference between the receiver count and the transmitter count of a slow 8-bit data character with no errors is:

$$((151 - 144) / 151) \times 100 = 4.63\%$$

For a 9-bit data character, it takes the receiver 10 bit times x 16 RTr cycles + 7 RTr cycles = 167 RTr cycles to start data sampling of the stop bit.

With the misaligned character shown in Figure 14-28, the receiver counts 167 RTr cycles at the point when the count of the transmitting device is 10 bit times x 16 RTt cycles = 160 RTt cycles.

The maximum percent difference between the receiver count and the transmitter count of a slow 9-bit character with no errors is:

$$((167 - 160) / 167) \text{ X } 100 = 4.19\%$$

14.4.6.5.2 Fast Data Tolerance

Figure 14-29 shows how much a fast received frame can be misaligned. The fast stop bit ends at RT10 instead of RT16 but is still sampled at RT8, RT9, and RT10.

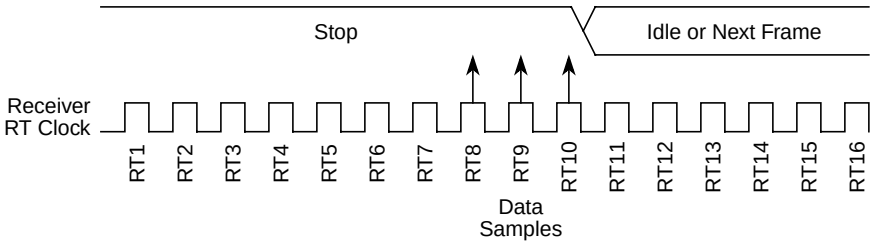

Figure 14-29. Fast Data

For an 8-bit data character, it takes the receiver 9 bit times x 16 RTr cycles + 10 RTr cycles = 154 RTr cycles to finish data sampling of the stop bit.

With the misaligned character shown in Figure 14-29, the receiver counts 154 RTr cycles at the point when the count of the transmitting device is 10 bit times x 16 RTt cycles = 160 RTt cycles.

The maximum percent difference between the receiver count and the transmitter count of a fast 8-bit character with no errors is:

$$((160 - 154) / 160) \times 100 = 3.75\%$$

For a 9-bit data character, it takes the receiver 10 bit times x 16 RTr cycles + 10 RTr cycles = 170 RTr cycles to finish data sampling of the stop bit.

With the misaligned character shown in Figure 14-29, the receiver counts 170 RTr cycles at the point when the count of the transmitting device is 11 bit times x 16 RTt cycles = 176 RTt cycles.

The maximum percent difference between the receiver count and the transmitter count of a fast 9-bit character with no errors is:

$$((176 - 170) /176) \times 100 = 3.40\%$$

14.4.6.6 Receiver Wakeup

To enable the SCI to ignore transmissions intended only for other receivers in multiple-receiver systems, the receiver can be put into a standby state. Setting the receiver wakeup bit, RWU, in SCI control register 2 (SCICR2) puts the receiver into standby state during which receiver interrupts are disabled.The SCI will still load the receive data into the SCIDRH/L registers, but it will not set the RDRF flag.

The transmitting device can address messages to selected receivers by including addressing information in the initial frame or frames of each message.

The WAKE bit in SCI control register 1 (SCICR1) determines how the SCI is brought out of the standby state to process an incoming message. The WAKE bit enables either idle line wakeup or address mark wakeup.

14.4.6.6.1 Idle Input line Wakeup (WAKE = 0)

In this wakeup method, an idle condition on the RXD pin clears the RWU bit and wakes up the SCI. The initial frame or frames of every message contain addressing information. All receivers evaluate the addressing information, and receivers for which the message is addressed process the frames that follow. Any receiver for which a message is not addressed can set its RWU bit and return to the standby state. The RWU bit remains set and the receiver remains on standby until another idle character appears on the RXD pin.

Idle line wakeup requires that messages be separated by at least one idle character and that no message contains idle characters.

The idle character that wakes a receiver does not set the receiver idle bit, IDLE, or the receive data register full flag, RDRF.

The idle line type bit, ILT, determines whether the receiver begins counting logic 1s as idle character bits after the start bit or after the stop bit. ILT is in SCI control register 1 (SCICR1).

14.4.6.6.2 Address Mark Wakeup (WAKE = 1)

In this wakeup method, a logic 1 in the most significant bit (MSB) position of a frame clears the RWU bit and wakes up the SCI. The logic 1 in the MSB position marks a frame as an address frame that contains addressing information. All receivers evaluate the addressing information, and the receivers for which the message is addressed process the frames that follow.Any receiver for which a message is not addressed can set its RWU bit and return to the standby state. The RWU bit remains set and the receiver remains on standby until another address frame appears on the RXD pin.

The logic 1 MSB of an address frame clears the receiver's RWU bit before the stop bit is received and sets the RDRF flag.

Address mark wakeup allows messages to contain idle characters but requires that the MSB be reserved for use in address frames.

NOTE

With the WAKE bit clear, setting the RWU bit after the RXD pin has been idle can cause the receiver to wake up immediately.

14.4.7 Single-Wire Operation

Normally, the SCI uses two pins for transmitting and receiving. In single-wire operation, the RXD pin is disconnected from the SCI. The SCI uses the TXD pin for both receiving and transmitting.

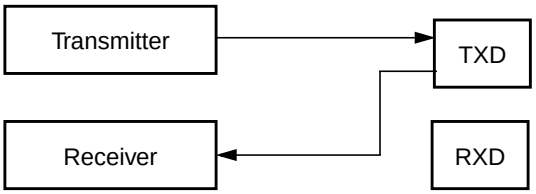

Figure 14-30. Single-Wire Operation (LOOPS = 1, RSRC = 1)

Enable single-wire operation by setting the LOOPS bit and the receiver source bit, RSRC, in SCI control register 1 (SCICR1). Setting the LOOPS bit disables the path from the RXD pin to the receiver. Setting the RSRC bit connects the TXD pin to the receiver. Both the transmitter and receiver must be enabled (TE = 1 and RE = 1).The TXDIR bit (SCISR2[1]) determines whether the TXD pin is going to be used as an input (TXDIR = 0) or an output (TXDIR = 1) in this mode of operation.

NOTE

In single-wire operation data from the TXD pin is inverted if RXPOL is set.

14.4.8 Loop Operation

In loop operation the transmitter output goes to the receiver input. The RXD pin is disconnected from the SCI.

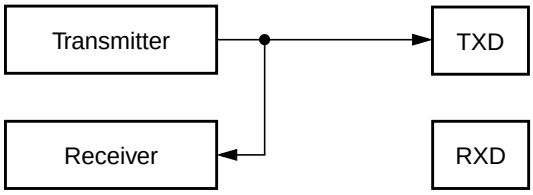

Figure 14-31. Loop Operation (LOOPS = 1, RSRC = 0)

Enable loop operation by setting the LOOPS bit and clearing the RSRC bit in SCI control register 1 (SCICR1). Setting the LOOPS bit disables the path from the RXD pin to the receiver. Clearing the RSRC bit connects the transmitter output to the receiver input. Both the transmitter and receiver must be enabled (TE = 1 and RE = 1).

NOTE

In loop operation data from the transmitter is not recognized by the receiver if RXPOL and TXPOL are not the same.

14.5 Initialization/Application Information

14.5.1 Reset Initialization

See Section 14.3.2, “Register Descriptions”.

14.5.2 Modes of Operation

14.5.2.1 Run Mode

Normal mode of operation.

To initialize a SCI transmission, see Section 14.4.5.2, “Character Transmission”.

14.5.2.2 Wait Mode

SCI operation in wait mode depends on the state of the SCISWAI bit in the SCI control register 1 (SCICR1).

- If SCISWAI is clear, the SCI operates normally when the CPU is in wait mode.
- If SCISWAI is set, SCI clock generation ceases and the SCI module enters a power-conservation state when the CPU is in wait mode. Setting SCISWAI does not affect the state of the receiver enable bit, RE, or the transmitter enable bit, TE.

  If SCISWAI is set, any transmission or reception in progress stops at wait mode entry. The transmission or reception resumes when either an internal or external interrupt brings the CPU out of wait mode. Exiting wait mode by reset aborts any transmission or reception in progress and resets the SCI.

14.5.2.3 Stop Mode

The SCI is inactive during stop mode for reduced power consumption. The STOP instruction does not affect the SCI register states, but the SCI bus clock will be disabled. The SCI operation resumes from where it left off after an external interrupt brings the CPU out of stop mode. Exiting stop mode by reset aborts any transmission or reception in progress and resets the SCI.

The receive input active edge detect circuit is still active in stop mode. An active edge on the receive input can be used to bring the CPU out of stop mode.

14.5.3 Interrupt Operation

This section describes the interrupt originated by the SCI block.The MCU must service the interrupt requests. Table 14-20 lists the eight interrupt sources of the SCI.

Table 14-20. SCI Interrupt Sources

Interrupt	Source	Local Enable	Description
TDRE	SCISR1[7]	TIE	Active high level. Indicates that a byte was transferred from SCIDRH/L to the transmit shift register.
TC	SCISR1[6]	TCIE	Active high level. Indicates that a transmit is complete.
RDRF	SCISR1[5]	RIE	Active high level. The RDRF interrupt indicates that received data is available in the SCI data register.
OR	SCISR1[3]		Active high level. This interrupt indicates that an overrun condition has occurred.
IDLE	SCISR1[4]	ILIE	Active high level. Indicates that receiver input has become idle.
RXEDGIF	SCIASR1[7]	RXEDGIE	Active high level. Indicates that an active edge (falling for RXPOL = 0, rising for RXPOL = 1) was detected.
BERRIF	SCIASR1[1]	BERRIE	Active high level. Indicates that a mismatch between transmitted and received data in a single wire application has happened.
BKDIF	SCIASR1[0]	BRKDIE	Active high level. Indicates that a break character has been received.

14.5.3.1 Description of Interrupt Operation

The SCI only originates interrupt requests. The following is a description of how the SCI makes a request and how the MCU should acknowledge that request. The interrupt vector offset and interrupt number are chip dependent. The SCI only has a single interrupt line (SCI Interrupt Signal, active high operation) and all the following interrupts, when generated, are ORed together and issued through that port.

14.5.3.1.1 TDRE Description

The TDRE interrupt is set high by the SCI when the transmit shift register receives a byte from the SCI data register. A TDRE interrupt indicates that the transmit data register (SCIDRH/L) is empty and that a new byte can be written to the SCIDRH/L for transmission.Clear TDRE by reading SCI status register 1 with TDRE set and then writing to SCI data register low (SCIDRL).

14.5.3.1.2 TC Description

The TC interrupt is set by the SCI when a transmission has been completed. Transmission is completed when all bits including the stop bit (if transmitted) have been shifted out and no data is queued to be transmitted. No stop bit is transmitted when sending a break character and the TC flag is set (providing there is no more data queued for transmission) when the break character has been shifted out. A TC interrupt indicates that there is no transmission in progress. TC is set high when the TDRE flag is set and no data, preamble, or break character is being transmitted. When TC is set, the TXD pin becomes idle (logic 1). Clear TC by reading SCI status register 1 (SCISR1) with TC set and then writing to SCI data register low (SCIDRL).TC is cleared automatically when data, preamble, or break is queued and ready to be sent.

14.5.3.1.3 RDRF Description

The RDRF interrupt is set when the data in the receive shift register transfers to the SCI data register. A RDRF interrupt indicates that the received data has been transferred to the SCI data register and that the byte can now be read by the MCU. The RDRF interrupt is cleared by reading the SCI status register one (SCISR1) and then reading SCI data register low (SCIDRL).

14.5.3.1.4 OR Description

The OR interrupt is set when software fails to read the SCI data register before the receive shift register receives the next frame. The newly acquired data in the shift register will be lost in this case, but the data already in the SCI data registers is not affected. The OR interrupt is cleared by reading the SCI status register one (SCISR1) and then reading SCI data register low (SCIDRL).

14.5.3.1.5 IDLE Description

The IDLE interrupt is set when 10 consecutive logic 1s (if M = 0) or 11 consecutive logic 1s (if M = 1) appear on the receiver input. Once the IDLE is cleared, a valid frame must again set the RDRF flag before an idle condition can set the IDLE flag. Clear IDLE by reading SCI status register 1 (SCISR1) with IDLE set and then reading SCI data register low (SCIDRL).

14.5.3.1.6 RXEDGIF Description

The RXEDGIF interrupt is set when an active edge (falling if RXPOL = 0, rising if RXPOL = 1) on the RXD pin is detected. Clear RXEDGIF by writing a “1” to the SCIASR1 SCI alternative status register 1.

14.5.3.1.7 BERRIF Description

The BERRIF interrupt is set when a mismatch between the transmitted and the received data in a single wire application like LIN was detected. Clear BERRIF by writing a “1” to the SCIASR1 SCI alternative status register 1. This flag is also cleared if the bit error detect feature is disabled.

14.5.3.1.8 BKDIF Description

The BKDIF interrupt is set when a break signal was received. Clear BKDIF by writing a “1” to the SCIASR1 SCI alternative status register 1. This flag is also cleared if break detect feature is disabled.

14.5.4 Recovery from Wait Mode

The SCI interrupt request can be used to bring the CPU out of wait mode.

14.5.5 Recovery from Stop Mode

An active edge on the receive input can be used to bring the CPU out of stop mode.

Chapter 15
Serial Peripheral Interface (S12SPIV5)

Table 15-1. Revision History

Revision Number	Revision Date	Sections Affected	Description of Changes
V05.00	24 Mar 2005	15.3.2/15-439	- Added 16-bit transfer width feature.

15.1 Introduction

The SPI module allows a duplex, synchronous, serial communication between the MCU and peripheral devices. Software can poll the SPI status flags or the SPI operation can be interrupt driven.

15.1.1 Glossary of Terms

SPI	Serial Peripheral Interface
$\overline{SS}$	Slave Select
SCK	Serial Clock
MOSI	Master Output, Slave Input
MISO	Master Input, Slave Output
MOMI	Master Output, Master Input
SISO	Slave Input, Slave Output

15.1.2 Features

The SPI includes these distinctive features:

- Master mode and slave mode
- Selectable 8 or 16-bit transfer width
- Bidirectional mode
- Slave select output
- Mode fault error flag with CPU interrupt capability
- Double-buffered data register
- Serial clock with programmable polarity and phase
- Control of SPI operation during wait mode

15.1.3 Modes of Operation

The SPI functions in three modes: run, wait, and stop.

- Run mode

  This is the basic mode of operation.
- Wait mode

  SPI operation in wait mode is a configurable low power mode, controlled by the SPISWAI bit located in the SPICR2 register. In wait mode, if the SPISWAI bit is clear, the SPI operates like in run mode. If the SPISWAI bit is set, the SPI goes into a power conservative state, with the SPI clock generation turned off. If the SPI is configured as a master, any transmission in progress stops, but is resumed after CPU goes into run mode. If the SPI is configured as a slave, reception and transmission of data continues, so that the slave stays synchronized to the master.
- Stop mode

  The SPI is inactive in stop mode for reduced power consumption. If the SPI is configured as a master, any transmission in progress stops, but is resumed after CPU goes into run mode. If the SPI is configured as a slave, reception and transmission of data continues, so that the slave stays synchronized to the master.

For a detailed description of operating modes, please refer to Section 15.4.7, “Low Power Mode Options”.

15.1.4 Block Diagram

Figure 15-1 gives an overview on the SPI architecture. The main parts of the SPI are status, control and data registers, shifter logic, baud rate generator, master/slave control logic, and port control logic.

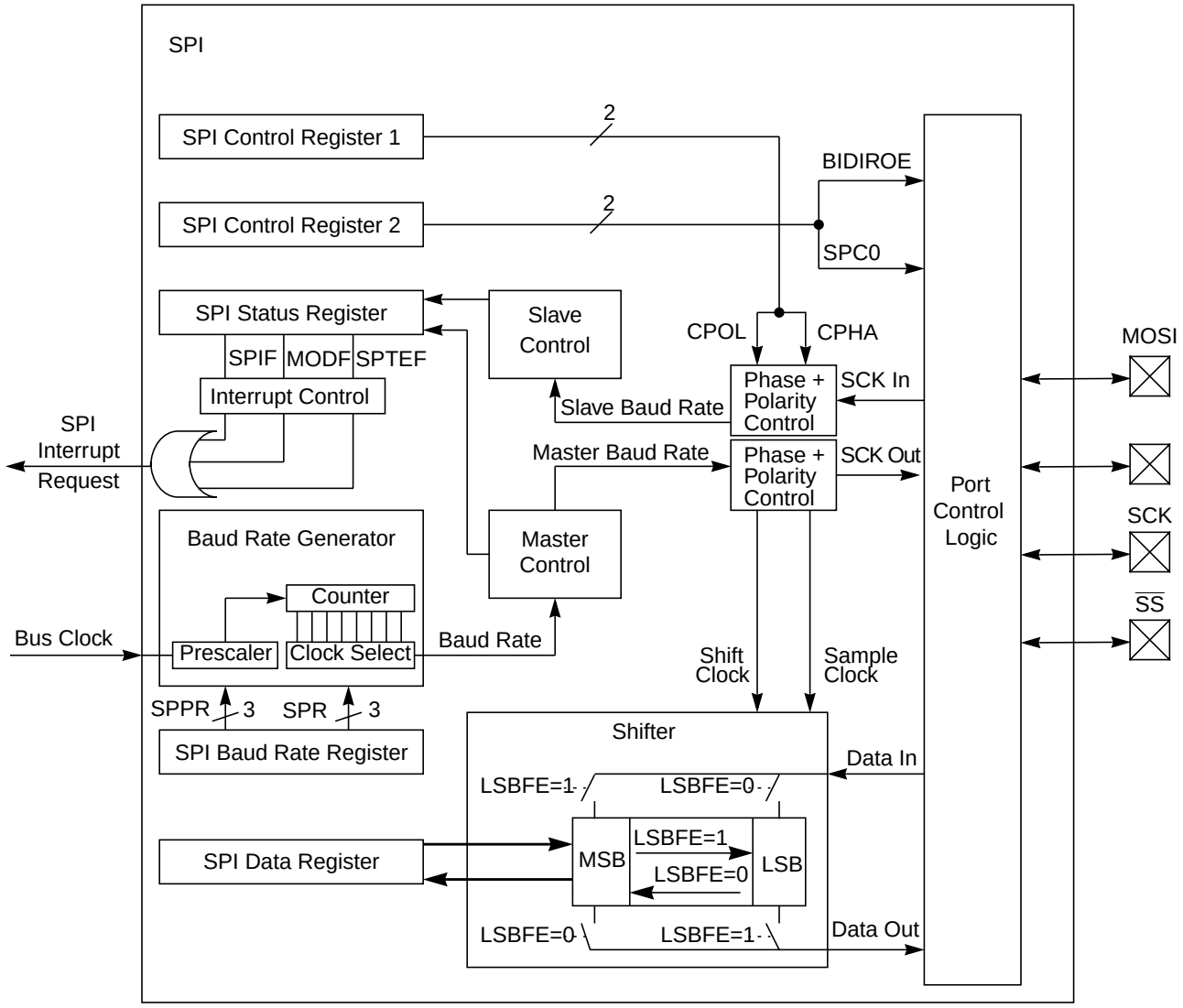

Figure 15-1. SPI Block Diagram

15.2 External Signal Description

This section lists the name and description of all ports including inputs and outputs that do, or may, connect off chip. The SPI module has a total of four external pins.

15.2.1 MOSI — Master Out/Slave In Pin

This pin is used to transmit data out of the SPI module when it is configured as a master and receive data when it is configured as slave.

15.2.2 MISO — Master In/Slave Out Pin

This pin is used to transmit data out of the SPI module when it is configured as a slave and receive data when it is configured as master.

15.2.3 $\overline{SS}$ — Slave Select Pin

This pin is used to output the select signal from the SPI module to another peripheral with which a data transfer is to take place when it is configured as a master and it is used as an input to receive the slave select signal when the SPI is configured as slave.

15.2.4 SCK — Serial Clock Pin

In master mode, this is the synchronous output clock. In slave mode, this is the synchronous input clock.

15.3 Memory Map and Register Definition

This section provides a detailed description of address space and registers used by the SPI.

15.3.1 Module Memory Map

The memory map for the SPI is given in Figure 15-2. The address listed for each register is the sum of a base address and an address offset. The base address is defined at the SoC level and the address offset is defined at the module level. Reads from the reserved bits return zeros and writes to the reserved bits have no effect.

Register Name		Bit 7	6	5	4	3	2	1	Bit 0
0x0000 SPICR1	R/W	SPIE	SPE	SPTIE	MSTR	CPOL	CPHA	SSOE	LSBFE
0x0001 SPICR2	R	0	XFRW	0	MODFEN	BIDIROE	0	SPISWAI	SPC0
	W								
0x0002 SPIBR	R	0	SPPR2	SPPR1	SPPR0	0	SPR2	SPR1	SPR0
	W								
0x0003 SPISR	R	SPIF	0	SPTEF	MODF	0	0	0	0
	W								
0x0004 SPIDRH	R	R15	R14	R13	R12	R11	R10	R9	R8
	W	T15	T14	T13	T12	T11	T10	T9	T8
0x0005 SPIDRL	R	R7	R6	R5	R4	R3	R2	R1	R0
	W	T7	T6	T5	T4	T3	T2	T1	T0
0x0006 Reserved	R								
	W								
0x0007 Reserved	R								
	W								

= Unimplemented or Reserved

Figure 15-2. SPI Register Summary

15.3.2 Register Descriptions

This section consists of register descriptions in address order. Each description includes a standard register diagram with an associated figure number. Details of register bit and field function follow the register diagrams, in bit order.

15.3.2.1 SPI Control Register 1 (SPICR1)

Module Base +0x0000

	7	6	5	4	3	2	1	0
R/W	SPIE	SPE	SPTIE	MSTR	CPOL	CPHA	SSOE	LSBFE
Reset	0	0	0	0	0	1	0	0

Figure 15-3. SPI Control Register 1 (SPICR1)

Read: Anytime

Write: Anytime

Table 15-2. SPICR1 Field Descriptions

Field	Description
7 SPIE	**SPI Interrupt Enable Bit** — This bit enables SPI interrupt requests, if SPIF or MODF status flag is set. 0 SPI interrupts disabled. 1 SPI interrupts enabled.
6 SPE	**SPI System Enable Bit** — This bit enables the SPI system and dedicates the SPI port pins to SPI system functions. If SPE is cleared, SPI is disabled and forced into idle state, status bits in SPISR register are reset. 0 SPI disabled (lower power consumption). 1 SPI enabled, port pins are dedicated to SPI functions.
5 SPTIE	**SPI Transmit Interrupt Enable** — This bit enables SPI interrupt requests, if SPTEF flag is set. 0 SPTEF interrupt disabled. 1 SPTEF interrupt enabled.
4 MSTR	**SPI Master/Slave Mode Select Bit** — This bit selects whether the SPI operates in master or slave mode. Switching the SPI from master to slave or vice versa forces the SPI system into idle state. 0 SPI is in slave mode. 1 SPI is in master mode.
3 CPOL	**SPI Clock Polarity Bit** — This bit selects an inverted or non-inverted SPI clock. To transmit data between SPI modules, the SPI modules must have identical CPOL values. In master mode, a change of this bit will abort a transmission in progress and force the SPI system into idle state. 0 Active-high clocks selected. In idle state SCK is low. 1 Active-low clocks selected. In idle state SCK is high.
2 CPHA	**SPI Clock Phase Bit** — This bit is used to select the SPI clock format. In master mode, a change of this bit will abort a transmission in progress and force the SPI system into idle state. 0 Sampling of data occurs at odd edges (1,3,5,...) of the SCK clock. 1 Sampling of data occurs at even edges (2,4,6,...) of the SCK clock.

Table 15-2. SPICR1 Field Descriptions (continued)

Field	Description
1 SSOE	**Slave Select Output Enable** — The $\overline{SS}$ output feature is enabled only in master mode, if MODFEN is set, by asserting the SSOE as shown in Table 15-3. In master mode, a change of this bit will abort a transmission in progress and force the SPI system into idle state.
0 LSBFE	**LSB-First Enable** — This bit does not affect the position of the MSB and LSB in the data register. Reads and writes of the data register always have the MSB in the highest bit position. In master mode, a change of this bit will abort a transmission in progress and force the SPI system into idle state. 0 Data is transferred most significant bit first. 1 Data is transferred least significant bit first.

Table 15-3. $\overline{SS}$ Input / Output Selection

MODFEN	SSOE	Master Mode	Slave Mode
0	0	$\overline{SS}$ not used by SPI	$\overline{SS}$ input
0	1	$\overline{SS}$ not used by SPI	$\overline{SS}$ input
1	0	$\overline{SS}$ input with MODF feature	$\overline{SS}$ input
1	1	$\overline{SS}$ is slave select output	$\overline{SS}$ input

15.3.2.2 SPI Control Register 2 (SPICR2)

Module Base +0x0001

	7	6	5	4	3	2	1	0
R	0	XFRW	0	MODFEN	BIDIROE	0	SPISWAI	SPC0
W								
Reset	0	0	0	0	0	0	0	0

= Unimplemented or Reserved

Figure 15-4. SPI Control Register 2 (SPICR2)

Read: Anytime

Write: Anytime; writes to the reserved bits have no effect

Table 15-4. SPICR2 Field Descriptions

Field	Description
6 XFRW	**Transfer Width —** This bit is used for selecting the data transfer width. If 8-bit transfer width is selected, SPIDRL becomes the dedicated data register and SPIDRH is unused. If 16-bit transfer width is selected, SPIDRH and SPIDRL form a 16-bit data register. Please refer to Section 15.3.2.4, “SPI Status Register (SPISR) for information about transmit/receive data handling and the interrupt flag clearing mechanism. In master mode, a change of this bit will abort a transmission in progress and force the SPI system into idle state. 0 8-bit Transfer Width (n = 8)[1] 1 16-bit Transfer Width (n = 16)[1]
4 MODFEN	**Mode Fault Enable Bit** — This bit allows the MODF failure to be detected. If the SPI is in master mode and MODFEN is cleared, then the $\overline{SS}$ port pin is not used by the SPI. In slave mode, the $\overline{SS}$ is available only as an input regardless of the value of MODFEN. For an overview on the impact of the MODFEN bit on the $\overline{SS}$ port pin configuration, refer to Table 15-3. In master mode, a change of this bit will abort a transmission in progress and force the SPI system into idle state. 0 $\overline{SS}$ port pin is not used by the SPI. 1 $\overline{SS}$ port pin with MODF feature.
3 BIDIROE	**Output Enable in the Bidirectional Mode of Operation** — This bit controls the MOSI and MISO output buffer of the SPI, when in bidirectional mode of operation (SPC0 is set). In master mode, this bit controls the output buffer of the MOSI port, in slave mode it controls the output buffer of the MISO port. In master mode, with SPC0 set, a change of this bit will abort a transmission in progress and force the SPI into idle state. 0 Output buffer disabled. 1 Output buffer enabled.
1 SPISWAI	**SPI Stop in Wait Mode Bit** — This bit is used for power conservation while in wait mode. 0 SPI clock operates normally in wait mode. 1 Stop SPI clock generation when in wait mode.
0 SPC0	**Serial Pin Control Bit 0** — This bit enables bidirectional pin configurations as shown in Table 15-5. In master mode, a change of this bit will abort a transmission in progress and force the SPI system into idle state.

1 n is used later in this document as a placeholder for the selected transfer width.

Table 15-5. Bidirectional Pin Configurations

Pin Mode	SPC0	BIDIROE	MISO	MOSI
Master Mode of Operation				
Normal	0	X	Master In	Master Out
Bidirectional	1	0	MISO not used by SPI	Master In
		1		Master I/O
Slave Mode of Operation				
Normal	0	X	Slave Out	Slave In
Bidirectional	1	0	Slave In	MOSI not used by SPI
		1	Slave I/O	

15.3.2.3 SPI Baud Rate Register (SPIBR)

Module Base +0x0002

	7	6	5	4	3	2	1	0
R	0	SPPR2	SPPR1	SPPR0	0	SPR2	SPR1	SPR0
W								
Reset	0	0	0	0	0	0	0	0

= Unimplemented or Reserved

Figure 15-5. SPI Baud Rate Register (SPIBR)

Read: Anytime

Write: Anytime; writes to the reserved bits have no effect

Table 15-6. SPIBR Field Descriptions

Field	Description
6–4 SPPR[2:0]	**SPI Baud Rate Preselection Bits** — These bits specify the SPI baud rates as shown in Table 15-7. In master mode, a change of these bits will abort a transmission in progress and force the SPI system into idle state.
2–0 SPR[2:0]	**SPI Baud Rate Selection Bits** — These bits specify the SPI baud rates as shown in Table 15-7. In master mode, a change of these bits will abort a transmission in progress and force the SPI system into idle state.

The baud rate divisor equation is as follows:

$$\text{BaudRateDivisor} = (\text{SPPR} + 1) \bullet 2^{(\text{SPR} + 1)} \qquad \textit{Eqn. 15-1}$$

The baud rate can be calculated with the following equation:

$$\text{Baud Rate} = \text{BusClock} / \text{BaudRateDivisor} \qquad \textit{Eqn. 15-2}$$

NOTE

For maximum allowed baud rates, please refer to the SPI Electrical Specification in the Electricals chapter of this data sheet.

Table 15-7. Example SPI Baud Rate Selection (25 MHz Bus Clock) (Sheet 1 of 3)

SPPR2	SPPR1	SPPR0	SPR2	SPR1	SPR0	Baud Rate Divisor	Baud Rate
0	0	0	0	0	0	2	12.5 Mbit/s
0	0	0	0	0	1	4	6.25 Mbit/s
0	0	0	0	1	0	8	3.125 Mbit/s
0	0	0	0	1	1	16	1.5625 Mbit/s
0	0	0	1	0	0	32	781.25 kbit/s
0	0	0	1	0	1	64	390.63 kbit/s
0	0	0	1	1	0	128	195.31 kbit/s
0	0	0	1	1	1	256	97.66 kbit/s
0	0	1	0	0	0	4	6.25 Mbit/s
0	0	1	0	0	1	8	3.125 Mbit/s
0	0	1	0	1	0	16	1.5625 Mbit/s
0	0	1	0	1	1	32	781.25 kbit/s

Table 15-7. Example SPI Baud Rate Selection (25 MHz Bus Clock) (Sheet 2 of 3)

SPPR2	SPPR1	SPPR0	SPR2	SPR1	SPR0	Baud Rate Divisor	Baud Rate
0	0	1	1	0	0	64	390.63 kbit/s
0	0	1	1	0	1	128	195.31 kbit/s
0	0	1	1	1	0	256	97.66 kbit/s
0	0	1	1	1	1	512	48.83 kbit/s
0	1	0	0	0	0	6	4.16667 Mbit/s
0	1	0	0	0	1	12	2.08333 Mbit/s
0	1	0	0	1	0	24	1.04167 Mbit/s
0	1	0	0	1	1	48	520.83 kbit/s
0	1	0	1	0	0	96	260.42 kbit/s
0	1	0	1	0	1	192	130.21 kbit/s
0	1	0	1	1	0	384	65.10 kbit/s
0	1	0	1	1	1	768	32.55 kbit/s
0	1	1	0	0	0	8	3.125 Mbit/s
0	1	1	0	0	1	16	1.5625 Mbit/s
0	1	1	0	1	0	32	781.25 kbit/s
0	1	1	0	1	1	64	390.63 kbit/s
0	1	1	1	0	0	128	195.31 kbit/s
0	1	1	1	0	1	256	97.66 kbit/s
0	1	1	1	1	0	512	48.83 kbit/s
0	1	1	1	1	1	1024	24.41 kbit/s
1	0	0	0	0	0	10	2.5 Mbit/s
1	0	0	0	0	1	20	1.25 Mbit/s
1	0	0	0	1	0	40	625 kbit/s
1	0	0	0	1	1	80	312.5 kbit/s
1	0	0	1	0	0	160	156.25 kbit/s
1	0	0	1	0	1	320	78.13 kbit/s
1	0	0	1	1	0	640	39.06 kbit/s
1	0	0	1	1	1	1280	19.53 kbit/s
1	0	1	0	0	0	12	2.08333 Mbit/s
1	0	1	0	0	1	24	1.04167 Mbit/s
1	0	1	0	1	0	48	520.83 kbit/s
1	0	1	0	1	1	96	260.42 kbit/s
1	0	1	1	0	0	192	130.21 kbit/s
1	0	1	1	0	1	384	65.10 kbit/s
1	0	1	1	1	0	768	32.55 kbit/s
1	0	1	1	1	1	1536	16.28 kbit/s
1	1	0	0	0	0	14	1.78571 Mbit/s
1	1	0	0	0	1	28	892.86 kbit/s
1	1	0	0	1	0	56	446.43 kbit/s
1	1	0	0	1	1	112	223.21 kbit/s
1	1	0	1	0	0	224	111.61 kbit/s
1	1	0	1	0	1	448	55.80 kbit/s

Table 15-7. Example SPI Baud Rate Selection (25 MHz Bus Clock) (Sheet 3 of 3)

SPPR2	SPPR1	SPPR0	SPR2	SPR1	SPR0	Baud Rate Divisor	Baud Rate
1	1	0	1	1	0	896	27.90 kbit/s
1	1	0	1	1	1	1792	13.95 kbit/s
1	1	1	0	0	0	16	1.5625 Mbit/s
1	1	1	0	0	1	32	781.25 kbit/s
1	1	1	0	1	0	64	390.63 kbit/s
1	1	1	0	1	1	128	195.31 kbit/s
1	1	1	1	0	0	256	97.66 kbit/s
1	1	1	1	0	1	512	48.83 kbit/s
1	1	1	1	1	0	1024	24.41 kbit/s
1	1	1	1	1	1	2048	12.21 kbit/s

15.3.2.4 SPI Status Register (SPISR)

Module Base +0x0003

	7	6	5	4	3	2	1	0
R	SPIF	0	SPTEF	MODF	0	0	0	0
W								
Reset	0	0	1	0	0	0	0	0

= Unimplemented or Reserved

Figure 15-6. SPI Status Register (SPISR)

Read: Anytime

Write: Has no effect

Table 15-8. SPISR Field Descriptions

Field	Description
7 SPIF	**SPIF Interrupt Flag** — This bit is set after received data has been transferred into the SPI data register. For information about clearing SPIF Flag, please refer to Table 15-9. 0 Transfer not yet complete. 1 New data copied to SPIDR.
5 SPTEF	**SPI Transmit Empty Interrupt Flag** — If set, this bit indicates that the transmit data register is empty. For information about clearing this bit and placing data into the transmit data register, please refer to Table 15-10. 0 SPI data register not empty. 1 SPI data register empty.
4 MODF	**Mode Fault Flag** — This bit is set if the $\overline{SS}$ input becomes low while the SPI is configured as a master and mode fault detection is enabled, MODFEN bit of SPICR2 register is set. Refer to MODFEN bit description in Section 15.3.2.2, “SPI Control Register 2 (SPICR2)”. The flag is cleared automatically by a read of the SPI status register (with MODF set) followed by a write to the SPI control register 1. 0 Mode fault has not occurred. 1 Mode fault has occurred.

Table 15-9. SPIF Interrupt Flag Clearing Sequence

XFRW Bit	SPIF Interrupt Flag Clearing Sequence			
0	Read SPISR with SPIF == 1	**then**	Read SPIDRL	
1	Read SPISR with SPIF == 1	**then**	Byte Read SPIDRL [1]	
			or	
			Byte Read SPIDRH [2]	Byte Read SPIDRL
			or	
			Word Read (SPIDRH:SPIDRL)	

1 Data in SPIDRH is lost in this case.

2 SPIDRH can be read repeatedly without any effect on SPIF. SPIF Flag is cleared only by the read of SPIDRL after reading SPISR with SPIF == 1.

Table 15-10. SPTEF Interrupt Flag Clearing Sequence

XFRW Bit	SPTEF Interrupt Flag Clearing Sequence			
0	Read SPISR with SPTEF == 1	**then**	Write to SPIDRL [1]	
1	Read SPISR with SPTEF == 1	**then**	Byte Write to SPIDRL [12]	
			or	
			Byte Write to SPIDRH [13]	Byte Write to SPIDRL [1]
			or	
			Word Write to (SPIDRH:SPIDRL) [1]	

1 Any write to SPIDRH or SPIDRL with SPTEF == 0 is effectively ignored.

2 Data in SPIDRH is undefined in this case.

3 SPIDRH can be written repeatedly without any effect on SPTEF. SPTEF Flag is cleared only by writing to SPIDRL after reading SPISR with SPTEF == 1.

15.3.2.5 SPI Data Register (SPIDR = SPIDRH:SPIDRL)

Module Base +0x0004

	7	6	5	4	3	2	1	0
R	R15	R14	R13	R12	R11	R10	R9	R8
W	T15	T14	T13	T12	T11	T10	T9	T8
Reset	0	0	0	0	0	0	0	0

Figure 15-7. SPI Data Register High (SPIDRH)

Module Base +0x0005

	7	6	5	4	3	2	1	0
R	R7	R6	R5	R4	R3	R2	R1	R0
W	T7	T6	T5	T4	T3	T2	T1	T0
Reset	0	0	0	0	0	0	0	0

Figure 15-8. SPI Data Register Low (SPIDRL)

Read: Anytime; read data only valid when SPIF is set

Write: Anytime

The SPI data register is both the input and output register for SPI data. A write to this register allows data to be queued and transmitted. For an SPI configured as a master, queued data is transmitted immediately after the previous transmission has completed. The SPI transmitter empty flag SPTEF in the SPISR register indicates when the SPI data register is ready to accept new data.

Received data in the SPIDR is valid when SPIF is set.

If SPIF is cleared and data has been received, the received data is transferred from the receive shift register to the SPIDR and SPIF is set.

If SPIF is set and not serviced, and a second data value has been received, the second received data is kept as valid data in the receive shift register until the start of another transmission. The data in the SPIDR does not change.

If SPIF is set and valid data is in the receive shift register, and SPIF is serviced before the start of a third transmission, the data in the receive shift register is transferred into the SPIDR and SPIF remains set (see Figure 15-9).

If SPIF is set and valid data is in the receive shift register, and SPIF is serviced after the start of a third transmission, the data in the receive shift register has become invalid and is not transferred into the SPIDR (see Figure 15-10).

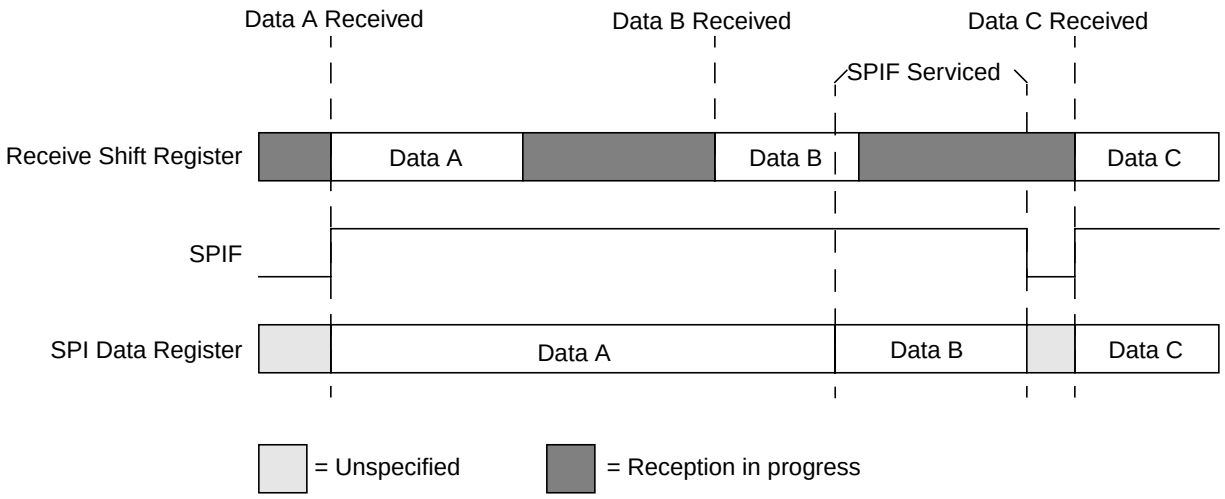

Figure 15-9. Reception with SPIF serviced in Time

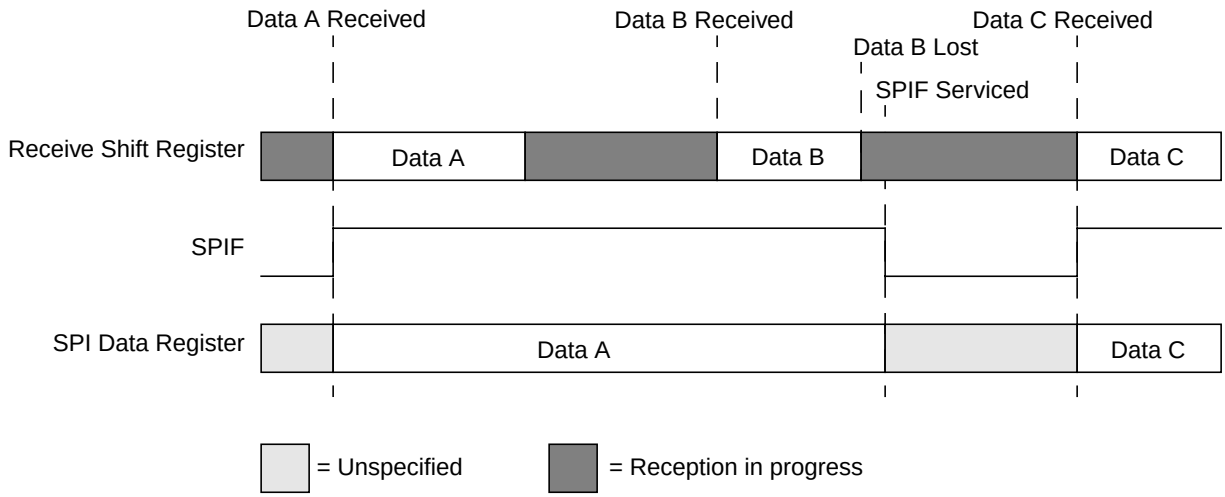

Figure 15-10. Reception with SPIF serviced too late

15.4 Functional Description

The SPI module allows a duplex, synchronous, serial communication between the MCU and peripheral devices. Software can poll the SPI status flags or SPI operation can be interrupt driven.

The SPI system is enabled by setting the SPI enable (SPE) bit in SPI control register 1. While SPE is set, the four associated SPI port pins are dedicated to the SPI function as:

- Slave select ($\overline{SS}$)
- Serial clock (SCK)
- Master out/slave in (MOSI)
- Master in/slave out (MISO)

The main element of the SPI system is the SPI data register. The n-bit[1] data register in the master and the n-bit[1] data register in the slave are linked by the MOSI and MISO pins to form a distributed 2n-bit[1] register. When a data transfer operation is performed, this 2n-bit[1] register is serially shifted n[1] bit positions by the S-clock from the master, so data is exchanged between the master and the slave. Data written to the master SPI data register becomes the output data for the slave, and data read from the master SPI data register after a transfer operation is the input data from the slave.

A read of SPISR with SPTEF = 1 followed by a write to SPIDR puts data into the transmit data register. When a transfer is complete and SPIF is cleared, received data is moved into the receive data register. This data register acts as the SPI receive data register for reads and as the SPI transmit data register for writes. A common SPI data register address is shared for reading data from the read data buffer and for writing data to the transmit data register.

The clock phase control bit (CPHA) and a clock polarity control bit (CPOL) in the SPI control register 1 (SPICR1) select one of four possible clock formats to be used by the SPI system. The CPOL bit simply selects a non-inverted or inverted clock. The CPHA bit is used to accommodate two fundamentally different protocols by sampling data on odd numbered SCK edges or on even numbered SCK edges (see Section 15.4.3, “Transmission Formats”).

The SPI can be configured to operate as a master or as a slave. When the MSTR bit in SPI control register1 is set, master mode is selected, when the MSTR bit is clear, slave mode is selected.

NOTE

A change of CPOL or MSTR bit while there is a received byte pending in the receive shift register will destroy the received byte and must be avoided.

15.4.1 Master Mode

The SPI operates in master mode when the MSTR bit is set. Only a master SPI module can initiate transmissions. A transmission begins by writing to the master SPI data register. If the shift register is empty, data immediately transfers to the shift register. Data begins shifting out on the MOSI pin under the control of the serial clock.

- Serial clock

  The SPR2, SPR1, and SPR0 baud rate selection bits, in conjunction with the SPPR2, SPPR1, and SPPR0 baud rate preselection bits in the SPI baud rate register, control the baud rate generator and determine the speed of the transmission. The SCK pin is the SPI clock output. Through the SCK pin, the baud rate generator of the master controls the shift register of the slave peripheral.
- MOSI, MISO pin

  In master mode, the function of the serial data output pin (MOSI) and the serial data input pin (MISO) is determined by the SPC0 and BIDIROE control bits.
- $\overline{SS}$ pin

  If MODFEN and SSOE are set, the $\overline{SS}$ pin is configured as slave select output. The $\overline{SS}$ output becomes low during each transmission and is high when the SPI is in idle state.

  If MODFEN is set and SSOE is cleared, the $\overline{SS}$ pin is configured as input for detecting mode fault error. If the $\overline{SS}$ input becomes low this indicates a mode fault error where another master tries to

1. n depends on the selected transfer width, please refer to Section 15.3.2.2, “SPI Control Register 2 (SPICR2)

drive the MOSI and SCK lines. In this case, the SPI immediately switches to slave mode, by clearing the MSTR bit and also disables the slave output buffer MISO (or SISO in bidirectional mode). So the result is that all outputs are disabled and SCK, MOSI, and MISO are inputs. If a transmission is in progress when the mode fault occurs, the transmission is aborted and the SPI is forced into idle state.

This mode fault error also sets the mode fault (MODF) flag in the SPI status register (SPISR). If the SPI interrupt enable bit (SPIE) is set when the MODF flag becomes set, then an SPI interrupt sequence is also requested.

When a write to the SPI data register in the master occurs, there is a half SCK-cycle delay. After the delay, SCK is started within the master. The rest of the transfer operation differs slightly, depending on the clock format specified by the SPI clock phase bit, CPHA, in SPI control register 1 (see Section 15.4.3, “Transmission Formats”).

NOTE

A change of the bits CPOL, CPHA, SSOE, LSBFE, XFRW, MODFEN, SPC0, or BIDIROE with SPC0 set, SPPR2-SPPR0 and SPR2-SPR0 in master mode will abort a transmission in progress and force the SPI into idle state. The remote slave cannot detect this, therefore the master must ensure that the remote slave is returned to idle state.

15.4.2 Slave Mode

The SPI operates in slave mode when the MSTR bit in SPI control register 1 is clear.

- Serial clock

  In slave mode, SCK is the SPI clock input from the master.
- MISO, MOSI pin

  In slave mode, the function of the serial data output pin (MISO) and serial data input pin (MOSI) is determined by the SPC0 bit and BIDIROE bit in SPI control register 2.
- $\overline{SS}$ pin

  The $\overline{SS}$ pin is the slave select input. Before a data transmission occurs, the $\overline{SS}$ pin of the slave SPI must be low. $\overline{SS}$ must remain low until the transmission is complete. If $\overline{SS}$ goes high, the SPI is forced into idle state.

  The $\overline{SS}$ input also controls the serial data output pin, if $\overline{SS}$ is high (not selected), the serial data output pin is high impedance, and, if $\overline{SS}$ is low, the first bit in the SPI data register is driven out of the serial data output pin. Also, if the slave is not selected ($\overline{SS}$ is high), then the SCK input is ignored and no internal shifting of the SPI shift register occurs.

  Although the SPI is capable of duplex operation, some SPI peripherals are capable of only receiving SPI data in a slave mode. For these simpler devices, there is no serial data out pin.

NOTE

When peripherals with duplex capability are used, take care not to simultaneously enable two receivers whose serial outputs drive the same system slave’s serial data output line.

As long as no more than one slave device drives the system slave's serial data output line, it is possible for several slaves to receive the same transmission from a master, although the master would not receive return information from all of the receiving slaves.

If the CPHA bit in SPI control register 1 is clear, odd numbered edges on the SCK input cause the data at the serial data input pin to be latched. Even numbered edges cause the value previously latched from the serial data input pin to shift into the LSB or MSB of the SPI shift register, depending on the LSBFE bit.

If the CPHA bit is set, even numbered edges on the SCK input cause the data at the serial data input pin to be latched. Odd numbered edges cause the value previously latched from the serial data input pin to shift into the LSB or MSB of the SPI shift register, depending on the LSBFE bit.

When CPHA is set, the first edge is used to get the first data bit onto the serial data output pin. When CPHA is clear and the $\overline{SS}$ input is low (slave selected), the first bit of the SPI data is driven out of the serial data output pin. After the nth[1] shift, the transfer is considered complete and the received data is transferred into the SPI data register. To indicate transfer is complete, the SPIF flag in the SPI status register is set.

NOTE

A change of the bits CPOL, CPHA, SSOE, LSBFE, MODFEN, SPC0, or BIDIROE with SPC0 set in slave mode will corrupt a transmission in progress and must be avoided.

15.4.3 Transmission Formats

During an SPI transmission, data is transmitted (shifted out serially) and received (shifted in serially) simultaneously. The serial clock (SCK) synchronizes shifting and sampling of the information on the two serial data lines. A slave select line allows selection of an individual slave SPI device; slave devices that are not selected do not interfere with SPI bus activities. Optionally, on a master SPI device, the slave select line can be used to indicate multiple-master bus contention.

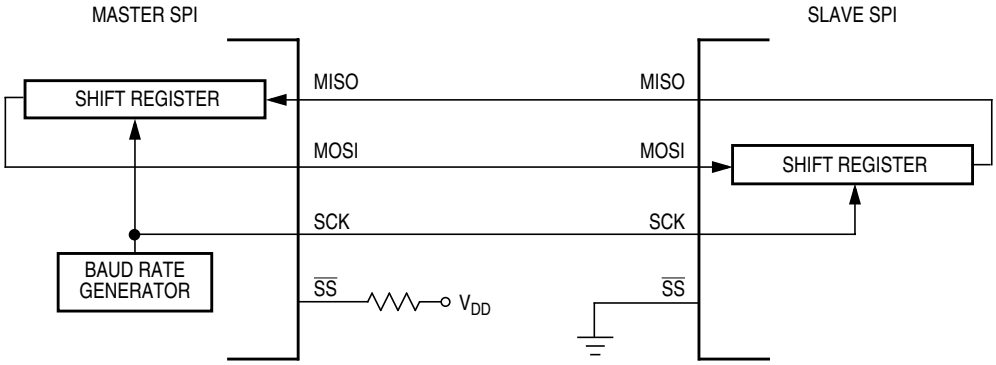

Figure 15-11. Master/Slave Transfer Block Diagram

15.4.3.1 Clock Phase and Polarity Controls

Using two bits in the SPI control register 1, software selects one of four combinations of serial clock phase and polarity.

1. n depends on the selected transfer width, please refer to Section 15.3.2.2, "SPI Control Register 2 (SPICR2)

The CPOL clock polarity control bit specifies an active high or low clock and has no significant effect on the transmission format.

The CPHA clock phase control bit selects one of two fundamentally different transmission formats.

Clock phase and polarity should be identical for the master SPI device and the communicating slave device. In some cases, the phase and polarity are changed between transmissions to allow a master device to communicate with peripheral slaves having different requirements.

15.4.3.2 CPHA = 0 Transfer Format

The first edge on the SCK line is used to clock the first data bit of the slave into the master and the first data bit of the master into the slave. In some peripherals, the first bit of the slave's data is available at the slave's data out pin as soon as the slave is selected. In this format, the first SCK edge is issued a half cycle after $\overline{SS}$ has become low.

A half SCK cycle later, the second edge appears on the SCK line. When this second edge occurs, the value previously latched from the serial data input pin is shifted into the LSB or MSB of the shift register, depending on LSBFE bit.

After this second edge, the next bit of the SPI master data is transmitted out of the serial data output pin of the master to the serial input pin on the slave. This process continues for a total of 16 edges on the SCK line, with data being latched on odd numbered edges and shifted on even numbered edges.

Data reception is double buffered. Data is shifted serially into the SPI shift register during the transfer and is transferred to the parallel SPI data register after the last bit is shifted in.

After 2n[1] (last) SCK edges:

- Data that was previously in the master SPI data register should now be in the slave data register and the data that was in the slave data register should be in the master.
- The SPIF flag in the SPI status register is set, indicating that the transfer is complete.

Figure 15-12 is a timing diagram of an SPI transfer where CPHA = 0. SCK waveforms are shown for CPOL = 0 and CPOL = 1. The diagram may be interpreted as a master or slave timing diagram because the SCK, MISO, and MOSI pins are connected directly between the master and the slave. The MISO signal is the output from the slave and the MOSI signal is the output from the master. The $\overline{SS}$ pin of the master must be either high or reconfigured as a general-purpose output not affecting the SPI.

1. n depends on the selected transfer width, please refer to Section 15.3.2.2, "SPI Control Register 2 (SPICR2)

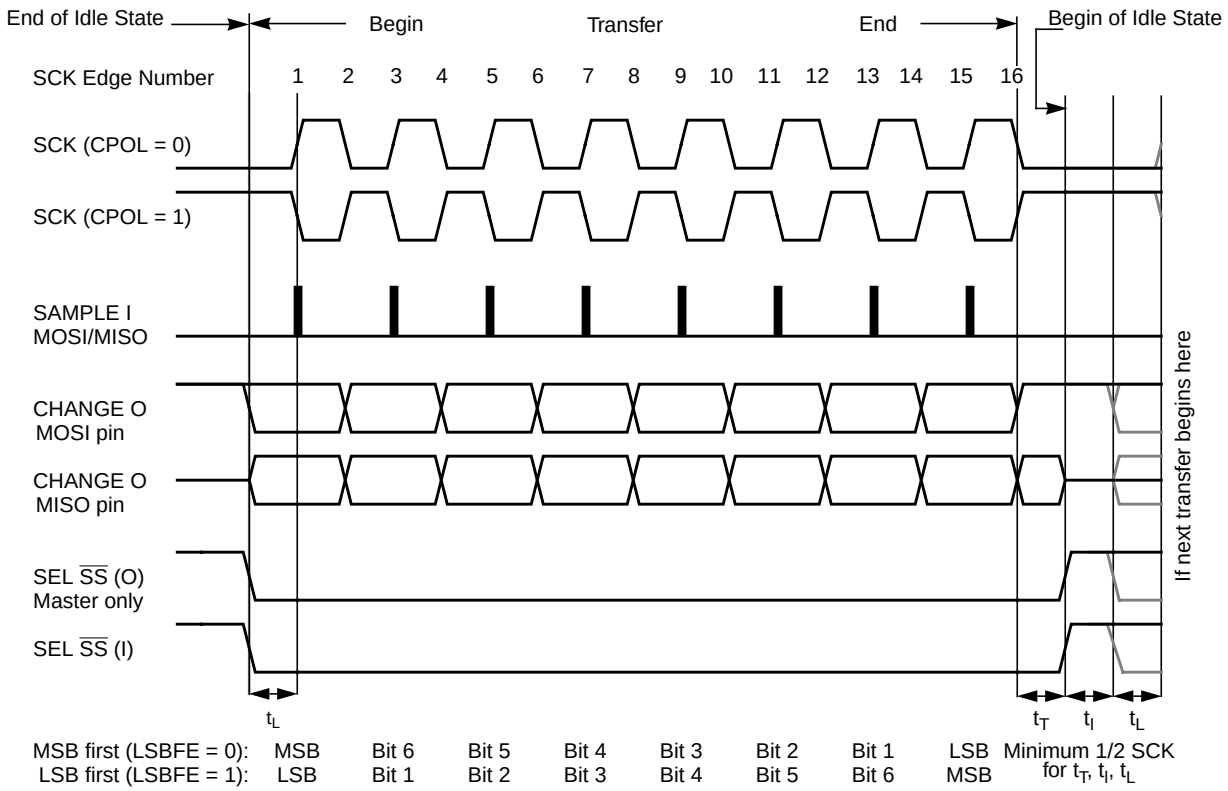

t_L = Minimum leading time before the first SCK edge

t_T = Minimum trailing time after the last SCK edge

t_I = Minimum idling time between transfers (minimum $\overline{SS}$ high time)

t_L, t_T, and t_I are guaranteed for the master mode and required for the slave mode.

Figure 15-12. SPI Clock Format 0 (CPHA = 0), with 8-bit Transfer Width selected (XFRW = 0)

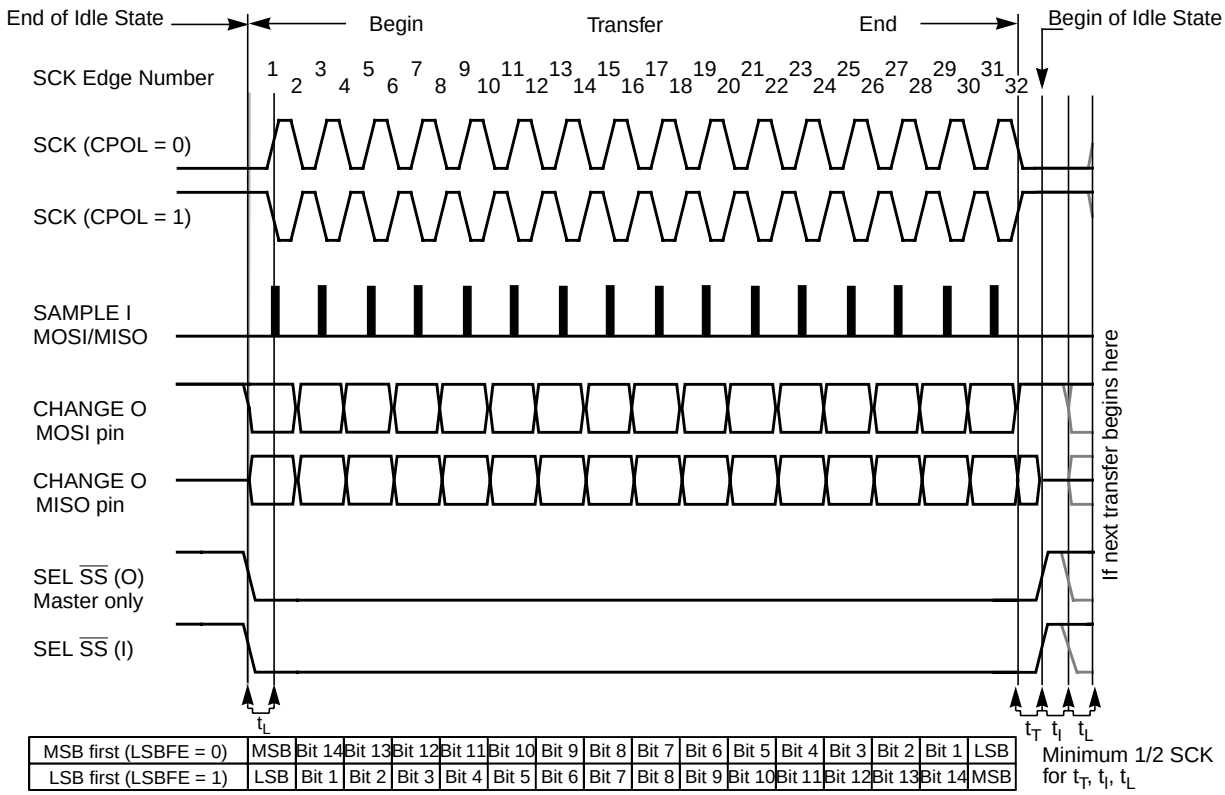

MSB first (LSBFE = 0)	MSB	Bit 14	Bit 13	Bit 12	Bit 11	Bit 10	Bit 9	Bit 8	Bit 7	Bit 6	Bit 5	Bit 4	Bit 3	Bit 2	Bit 1	LSB
LSB first (LSBFE = 1)	LSB	Bit 1	Bit 2	Bit 3	Bit 4	Bit 5	Bit 6	Bit 7	Bit 8	Bit 9	Bit 10	Bit 11	Bit 12	Bit 13	Bit 14	MSB

t_L = Minimum leading time before the first SCK edge
t_T = Minimum trailing time after the last SCK edge
t_I = Minimum idling time between transfers (minimum $\overline{SS}$ high time)
t_L, t_T, and t_I are guaranteed for the master mode and required for the slave mode.

Figure 15-13. SPI Clock Format 0 (CPHA = 0), with 16-Bit Transfer Width selected (XFRW = 1)

In slave mode, if the $\overline{SS}$ line is not deasserted between the successive transmissions then the content of the SPI data register is not transmitted; instead the last received data is transmitted. If the $\overline{SS}$ line is deasserted for at least minimum idle time (half SCK cycle) between successive transmissions, then the content of the SPI data register is transmitted.

In master mode, with slave select output enabled the $\overline{SS}$ line is always deasserted and reasserted between successive transfers for at least minimum idle time.

15.4.3.3 CPHA = 1 Transfer Format

Some peripherals require the first SCK edge before the first data bit becomes available at the data out pin, the second edge clocks data into the system. In this format, the first SCK edge is issued by setting the CPHA bit at the beginning of the n[1]-cycle transfer operation.

The first edge of SCK occurs immediately after the half SCK clock cycle synchronization delay. This first edge commands the slave to transfer its first data bit to the serial data input pin of the master.

A half SCK cycle later, the second edge appears on the SCK pin. This is the latching edge for both the master and slave.

1. n depends on the selected transfer width, please refer to Section 15.3.2.2, “SPI Control Register 2 (SPICR2)

When the third edge occurs, the value previously latched from the serial data input pin is shifted into the LSB or MSB of the SPI shift register, depending on LSBFE bit. After this edge, the next bit of the master data is coupled out of the serial data output pin of the master to the serial input pin on the slave.

This process continues for a total of n[1] edges on the SCK line with data being latched on even numbered edges and shifting taking place on odd numbered edges.

Data reception is double buffered, data is serially shifted into the SPI shift register during the transfer and is transferred to the parallel SPI data register after the last bit is shifted in.

After 2n[1] SCK edges:

- Data that was previously in the SPI data register of the master is now in the data register of the slave, and data that was in the data register of the slave is in the master.
- The SPIF flag bit in SPISR is set indicating that the transfer is complete.

Figure 15-14 shows two clocking variations for CPHA = 1. The diagram may be interpreted as a master or slave timing diagram because the SCK, MISO, and MOSI pins are connected directly between the master and the slave. The MISO signal is the output from the slave, and the MOSI signal is the output from the master. The $\overline{SS}$ line is the slave select input to the slave. The $\overline{SS}$ pin of the master must be either high or reconfigured as a general-purpose output not affecting the SPI.

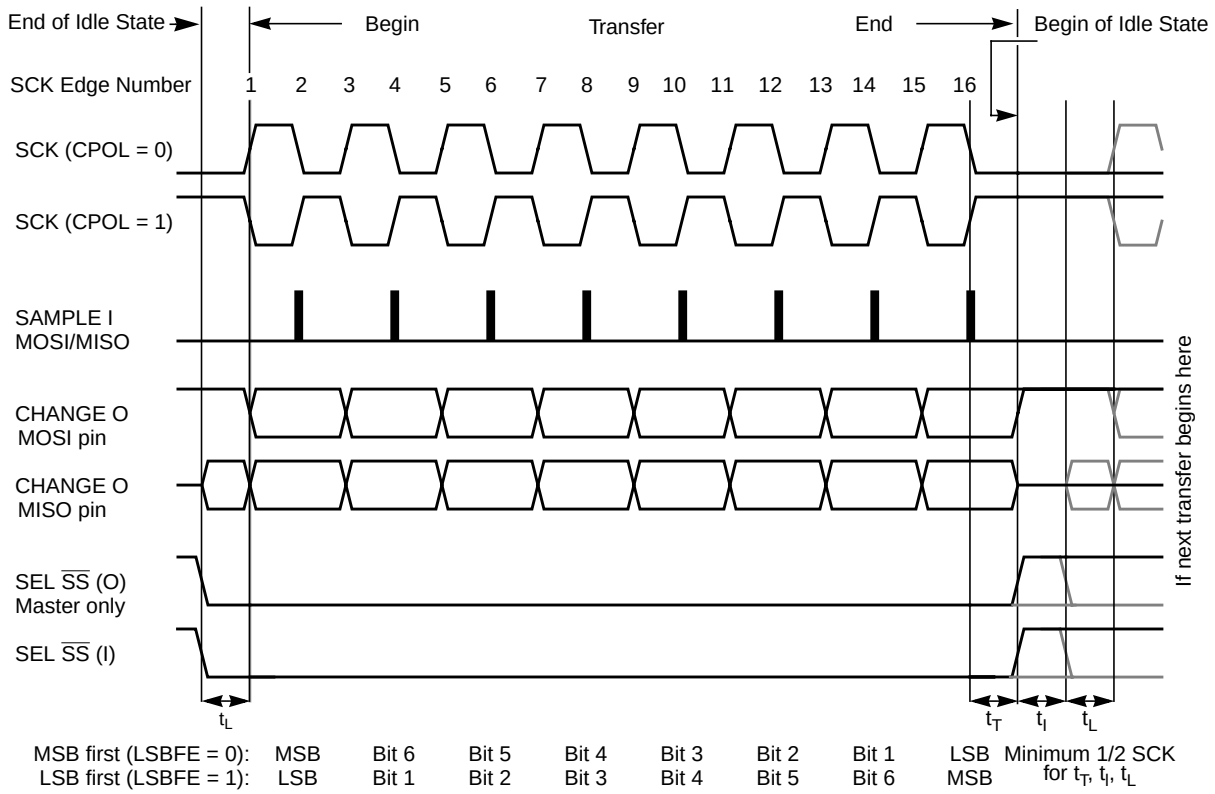

t_L = Minimum leading time before the first SCK edge, not required for back-to-back transfers
t_T = Minimum trailing time after the last SCK edge
t_I = Minimum idling time between transfers (minimum $\overline{SS}$ high time), not required for back-to-back transfers

Figure 15-14. SPI Clock Format 1 (CPHA = 1), with 8-Bit Transfer Width selected (XFRW = 0)

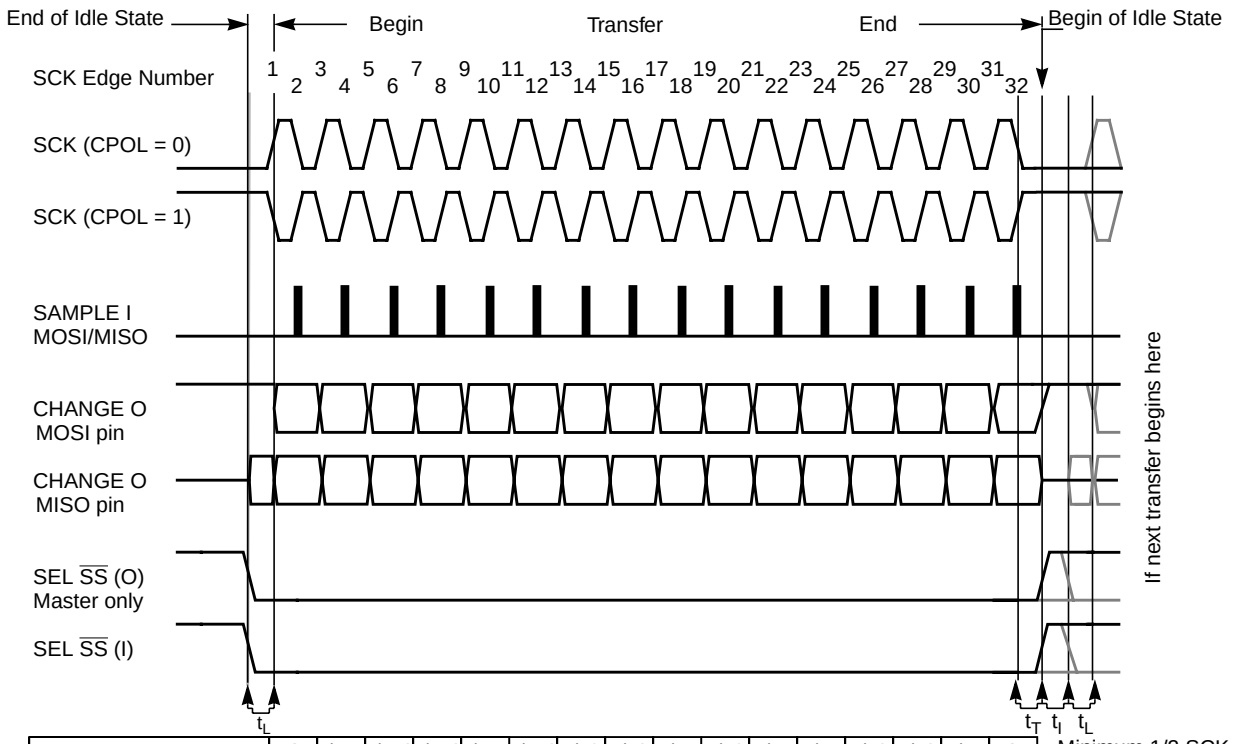

t_L = Minimum leading time before the first SCK edge, not required for back-to-back transfers

t_T = Minimum trailing time after the last SCK edge

t_I = Minimum idling time between transfers (minimum $\overline{SS}$ high time), not required for back-to-back transfers

Figure 15-15. SPI Clock Format 1 (CPHA = 1), with 16-Bit Transfer Width selected (XFRW = 1)

The $\overline{SS}$ line can remain active low between successive transfers (can be tied low at all times). This format is sometimes preferred in systems having a single fixed master and a single slave that drive the MISO data line.

- Back-to-back transfers in master mode

  In master mode, if a transmission has completed and new data is available in the SPI data register, this data is sent out immediately without a trailing and minimum idle time.

The SPI interrupt request flag (SPIF) is common to both the master and slave modes. SPIF gets set one half SCK cycle after the last SCK edge.

15.4.4 SPI Baud Rate Generation

Baud rate generation consists of a series of divider stages. Six bits in the SPI baud rate register (SPPR2, SPPR1, SPPR0, SPR2, SPR1, and SPR0) determine the divisor to the SPI module clock which results in the SPI baud rate.

The SPI clock rate is determined by the product of the value in the baud rate preselection bits (SPPR2–SPPR0) and the value in the baud rate selection bits (SPR2–SPR0). The module clock divisor equation is shown in Equation 15-3.

$$\text{BaudRateDivisor} = (\text{SPPR} + 1) \bullet 2^{(\text{SPR} + 1)} \qquad \textit{Eqn. 15-3}$$

When all bits are clear (the default condition), the SPI module clock is divided by 2. When the selection bits (SPR2–SPR0) are 001 and the preselection bits (SPPR2–SPPR0) are 000, the module clock divisor becomes 4. When the selection bits are 010, the module clock divisor becomes 8, etc.

When the preselection bits are 001, the divisor determined by the selection bits is multiplied by 2. When the preselection bits are 010, the divisor is multiplied by 3, etc. See Table 15-7 for baud rate calculations for all bit conditions, based on a 25 MHz bus clock. The two sets of selects allows the clock to be divided by a non-power of two to achieve other baud rates such as divide by 6, divide by 10, etc.

The baud rate generator is activated only when the SPI is in master mode and a serial transfer is taking place. In the other cases, the divider is disabled to decrease I_{DD} current.

NOTE

For maximum allowed baud rates, please refer to the SPI Electrical Specification in the Electricals chapter of this data sheet.

15.4.5 Special Features

15.4.5.1 $\overline{SS}$ Output

The $\overline{SS}$ output feature automatically drives the $\overline{SS}$ pin low during transmission to select external devices and drives it high during idle to deselect external devices. When $\overline{SS}$ output is selected, the $\overline{SS}$ output pin is connected to the $\overline{SS}$ input pin of the external device.

The $\overline{SS}$ output is available only in master mode during normal SPI operation by asserting SSOE and MODFEN bit as shown in Table 15-3.

The mode fault feature is disabled while $\overline{SS}$ output is enabled.

NOTE

Care must be taken when using the $\overline{SS}$ output feature in a multimaster system because the mode fault feature is not available for detecting system errors between masters.

15.4.5.2 Bidirectional Mode (MOMI or SISO)

The bidirectional mode is selected when the SPC0 bit is set in SPI control register 2 (see Table 15-11). In this mode, the SPI uses only one serial data pin for the interface with external device(s). The MSTR bit decides which pin to use. The MOSI pin becomes the serial data I/O (MOMI) pin for the master mode, and the MISO pin becomes serial data I/O (SISO) pin for the slave mode. The MISO pin in master mode and MOSI pin in slave mode are not used by the SPI.

Table 15-11. Normal Mode and Bidirectional Mode

When SPE = 1	Master Mode MSTR = 1	Slave Mode MSTR = 0
Normal Mode SPC0 = 0	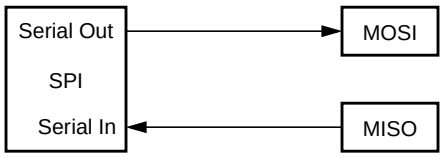	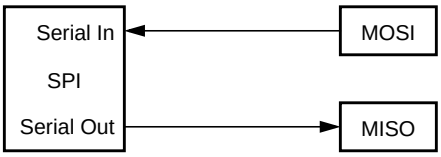
Bidirectional Mode SPC0 = 1	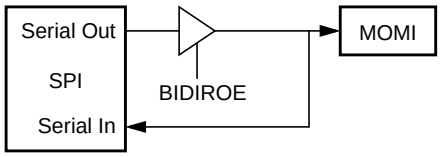	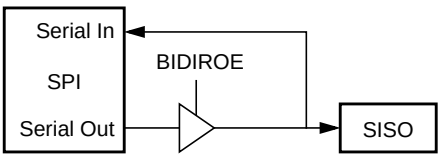

The direction of each serial I/O pin depends on the BIDIROE bit. If the pin is configured as an output, serial data from the shift register is driven out on the pin. The same pin is also the serial input to the shift register.

- The SCK is output for the master mode and input for the slave mode.
- The $\overline{SS}$ is the input or output for the master mode, and it is always the input for the slave mode.
- The bidirectional mode does not affect SCK and $\overline{SS}$ functions.

NOTE

In bidirectional master mode, with mode fault enabled, both data pins MISO and MOSI can be occupied by the SPI, though MOSI is normally used for transmissions in bidirectional mode and MISO is not used by the SPI. If a mode fault occurs, the SPI is automatically switched to slave mode. In this case MISO becomes occupied by the SPI and MOSI is not used. This must be considered, if the MISO pin is used for another purpose.

15.4.6 Error Conditions

The SPI has one error condition:

- Mode fault error

15.4.6.1 Mode Fault Error

If the $\overline{SS}$ input becomes low while the SPI is configured as a master, it indicates a system error where more than one master may be trying to drive the MOSI and SCK lines simultaneously. This condition is not permitted in normal operation, the MODF bit in the SPI status register is set automatically, provided the MODFEN bit is set.

In the special case where the SPI is in master mode and MODFEN bit is cleared, the $\overline{SS}$ pin is not used by the SPI. In this special case, the mode fault error function is inhibited and MODF remains cleared. In case

the SPI system is configured as a slave, the $\overline{SS}$ pin is a dedicated input pin. Mode fault error doesn't occur in slave mode.

If a mode fault error occurs, the SPI is switched to slave mode, with the exception that the slave output buffer is disabled. So SCK, MISO, and MOSI pins are forced to be high impedance inputs to avoid any possibility of conflict with another output driver. A transmission in progress is aborted and the SPI is forced into idle state.

If the mode fault error occurs in the bidirectional mode for a SPI system configured in master mode, output enable of the MOMI (MOSI in bidirectional mode) is cleared if it was set. No mode fault error occurs in the bidirectional mode for SPI system configured in slave mode.

The mode fault flag is cleared automatically by a read of the SPI status register (with MODF set) followed by a write to SPI control register 1. If the mode fault flag is cleared, the SPI becomes a normal master or slave again.

NOTE

If a mode fault error occurs and a received data byte is pending in the receive shift register, this data byte will be lost.

15.4.7 Low Power Mode Options

15.4.7.1 SPI in Run Mode

In run mode with the SPI system enable (SPE) bit in the SPI control register clear, the SPI system is in a low-power, disabled state. SPI registers remain accessible, but clocks to the core of this module are disabled.

15.4.7.2 SPI in Wait Mode

SPI operation in wait mode depends upon the state of the SPISWAI bit in SPI control register 2.

- If SPISWAI is clear, the SPI operates normally when the CPU is in wait mode
- If SPISWAI is set, SPI clock generation ceases and the SPI module enters a power conservation state when the CPU is in wait mode.
  - If SPISWAI is set and the SPI is configured for master, any transmission and reception in progress stops at wait mode entry. The transmission and reception resumes when the SPI exits wait mode.
  - If SPISWAI is set and the SPI is configured as a slave, any transmission and reception in progress continues if the SCK continues to be driven from the master. This keeps the slave synchronized to the master and the SCK.

    If the master transmits several bytes while the slave is in wait mode, the slave will continue to send out bytes consistent with the operation mode at the start of wait mode (i.e., if the slave is currently sending its SPIDR to the master, it will continue to send the same byte. Else if the slave is currently sending the last received byte from the master, it will continue to send each previous master byte).

NOTE

Care must be taken when expecting data from a master while the slave is in wait or stop mode. Even though the shift register will continue to operate, the rest of the SPI is shut down (i.e., a SPIF interrupt will **not** be generated until exiting stop or wait mode). Also, the byte from the shift register will not be copied into the SPIDR register until after the slave SPI has exited wait or stop mode. In slave mode, a received byte pending in the receive shift register will be lost when entering wait or stop mode. An SPIF flag and SPIDR copy is generated only if wait mode is entered or exited during a tranmission. If the slave enters wait mode in idle mode and exits wait mode in idle mode, neither a SPIF nor a SPIDR copy will occur.

15.4.7.3 SPI in Stop Mode

Stop mode is dependent on the system. The SPI enters stop mode when the module clock is disabled (held high or low). If the SPI is in master mode and exchanging data when the CPU enters stop mode, the transmission is frozen until the CPU exits stop mode. After stop, data to and from the external SPI is exchanged correctly. In slave mode, the SPI will stay synchronized with the master.

The stop mode is not dependent on the SPISWAI bit.

15.4.7.4 Reset

The reset values of registers and signals are described in Section 15.3, “Memory Map and Register Definition”, which details the registers and their bit fields.

- If a data transmission occurs in slave mode after reset without a write to SPIDR, it will transmit garbage, or the data last received from the master before the reset.
- Reading from the SPIDR after reset will always read zeros.

15.4.7.5 Interrupts

The SPI only originates interrupt requests when SPI is enabled (SPE bit in SPICR1 set). The following is a description of how the SPI makes a request and how the MCU should acknowledge that request. The interrupt vector offset and interrupt priority are chip dependent.

The interrupt flags MODF, SPIF, and SPTEF are logically ORed to generate an interrupt request.

15.4.7.5.1 MODF

MODF occurs when the master detects an error on the $\overline{SS}$ pin. The master SPI must be configured for the MODF feature (see Table 15-3). After MODF is set, the current transfer is aborted and the following bit is changed:

- MSTR = 0, The master bit in SPICR1 resets.

The MODF interrupt is reflected in the status register MODF flag. Clearing the flag will also clear the interrupt. This interrupt will stay active while the MODF flag is set. MODF has an automatic clearing process which is described in Section 15.3.2.4, “SPI Status Register (SPISR)”.

15.4.7.5.2 SPIF

SPIF occurs when new data has been received and copied to the SPI data register. After SPIF is set, it does not clear until it is serviced. SPIF has an automatic clearing process, which is described in Section 15.3.2.4, “SPI Status Register (SPISR)”.

15.4.7.5.3 SPTEF

SPTEF occurs when the SPI data register is ready to accept new data. After SPTEF is set, it does not clear until it is serviced. SPTEF has an automatic clearing process, which is described in Section 15.3.2.4, “SPI Status Register (SPISR)”.

Chapter 16
Timer Module (TIM16B8CV2)

Table 16-1. Revision History

Revision Number	Revision Date	Sections Affected	Description of Changes
V02.05	9 Jul 2009	16.3.2.12/16-477 16.3.2.13/16-477 16.3.2.15/16-479 16.3.2.16/16-480 16.3.2.19/16-482 16.4.2/16-485 16.4.3/16-485	- Revised flag clearing procedure, whereby TEN or PAEN bit must be set when clearing flags. - Add fomula to describe prescaler
V02.06	26 Aug 2009	16.1.2/16-462 16.3.2.15/16-479 16.3.2.2/16-468 16.3.2.3/16-469 16.3.2.4/16-470 16.4.3/16-485	- Correct typo: TSCR ->TSCR1 - Correct reference: Figure 1-25 -> Figure 1-31 - Add description, “a counter overflow when TTOV[7] is set”, to be the condition of channel 7 override event. - Phrase the description of OC7M to make it more explicit
V02.07	04 May 2010	16.3.2.8/16-473 16.3.2.11/16-476 16.4.3/16-485	- Add Table 16-10 - in TCRE bit description part,add Note - Add Figure 16-31

16.1 Introduction

The basic timer consists of a 16-bit, software-programmable counter driven by a enhanced programmable prescaler.

This timer can be used for many purposes, including input waveform measurements while simultaneously generating an output waveform. Pulse widths can vary from microseconds to many seconds.

This timer contains 8 complete input capture/output compare channels and one pulse accumulator. The input capture function is used to detect a selected transition edge and record the time. The output compare function is used for generating output signals or for timer software delays. The 16-bit pulse accumulator is used to operate as a simple event counter or a gated time accumulator. The pulse accumulator shares timer channel 7 when in event mode.

A full access for the counter registers or the input capture/output compare registers should take place in one clock cycle. Accessing high byte and low byte separately for all of these registers may not yield the same result as accessing them in one word.

16.1.1 Features

The TIM16B8CV2 includes these distinctive features:

- Eight input capture/output compare channels.
- Clock prescaling.
- 16-bit counter.
- 16-bit pulse accumulator.

16.1.2 Modes of Operation

Stop: Timer is off because clocks are stopped.

Freeze: Timer counter keep on running, unless TSFRZ in TSCR1 (0x0006) is set to 1.

Wait: Counters keep on running, unless TSWAI in TSCR1 (0x0006) is set to 1.

Normal: Timer counter keep on running, unless TEN in TSCR1 (0x0006) is cleared to 0.

16.1.3 Block Diagrams

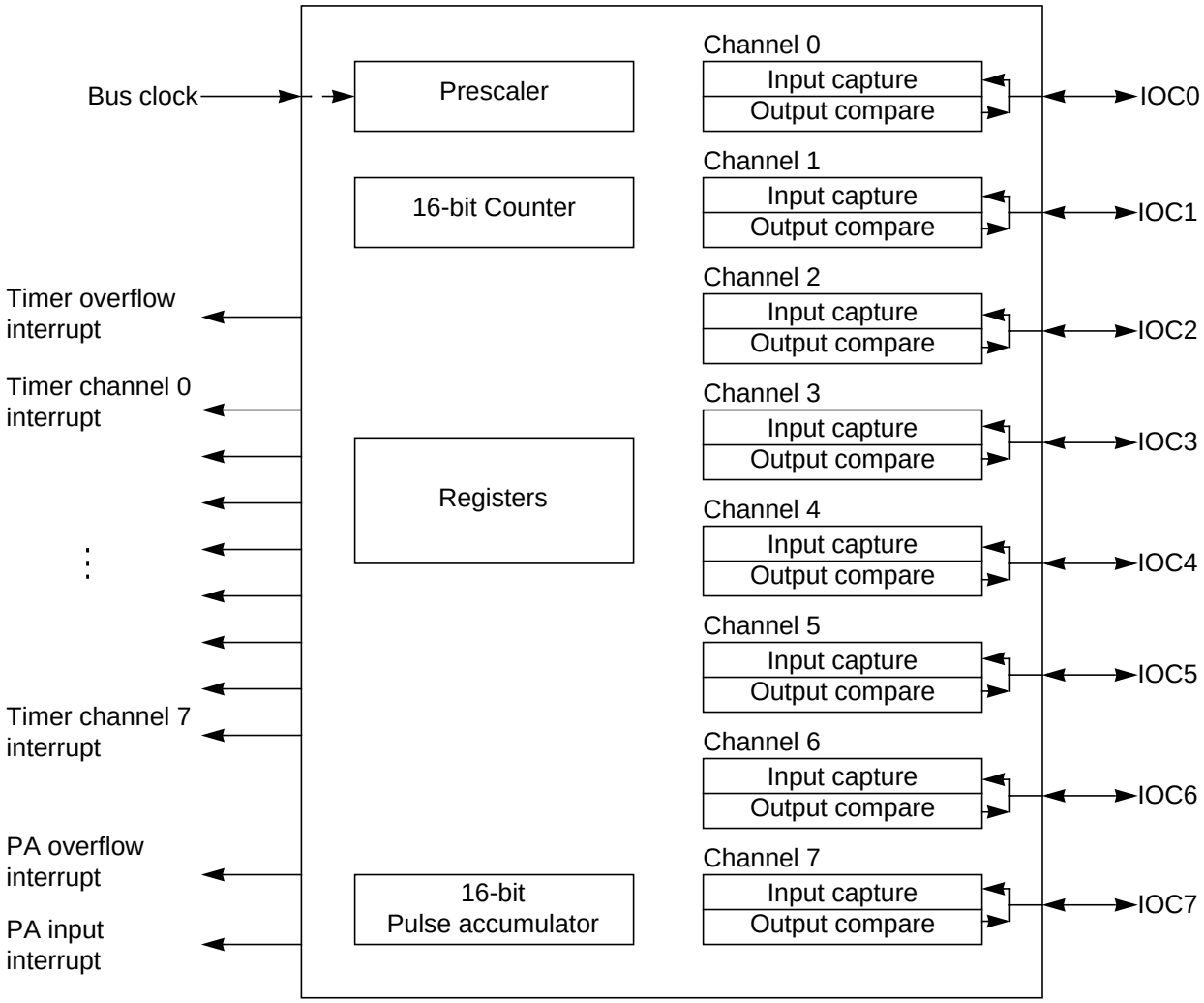

Figure 16-1. TIM16B8CV2 Block Diagram

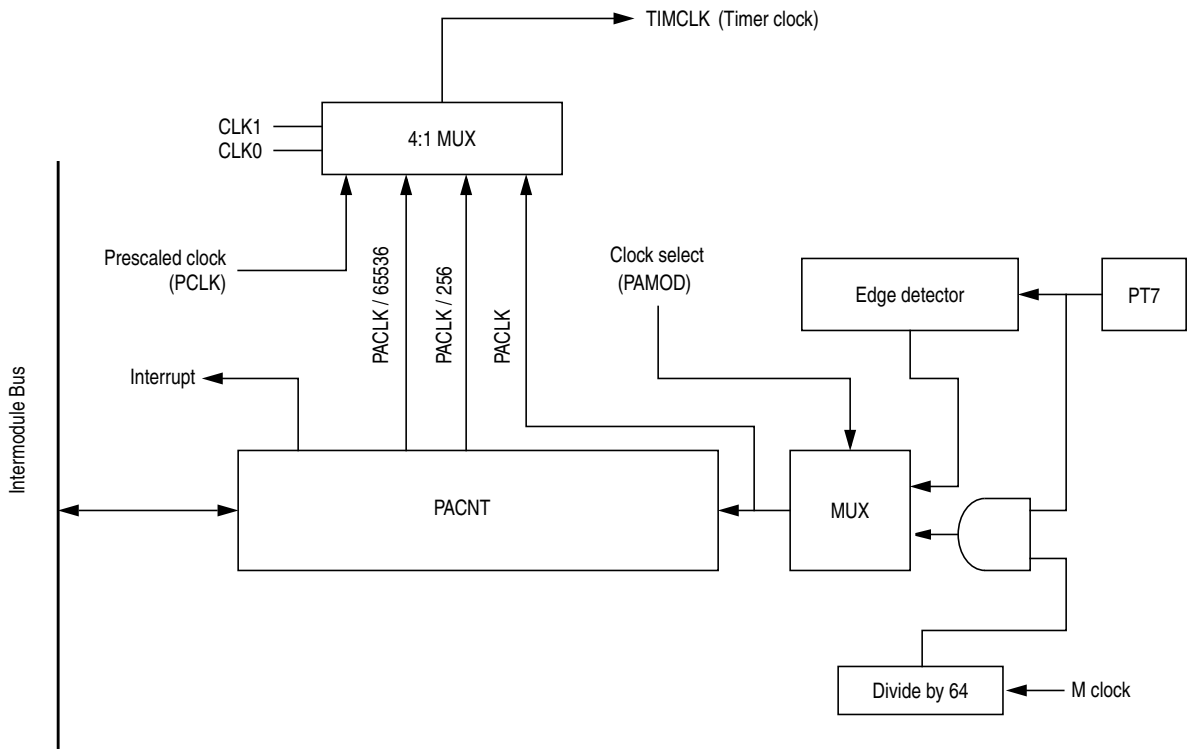

Figure 16-2. 16-Bit Pulse Accumulator Block Diagram

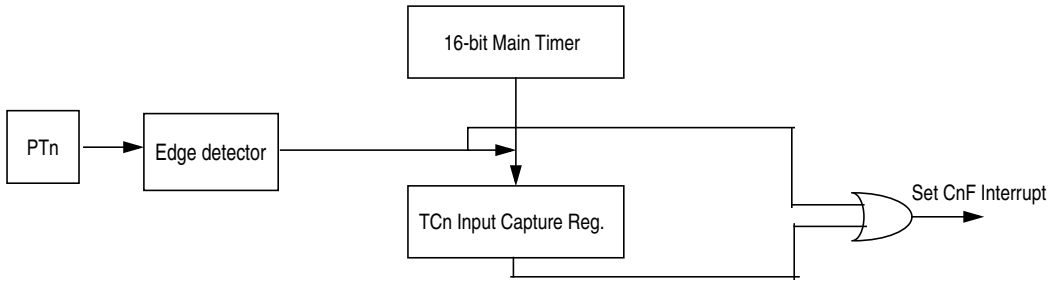

Figure 16-3. Interrupt Flag Setting

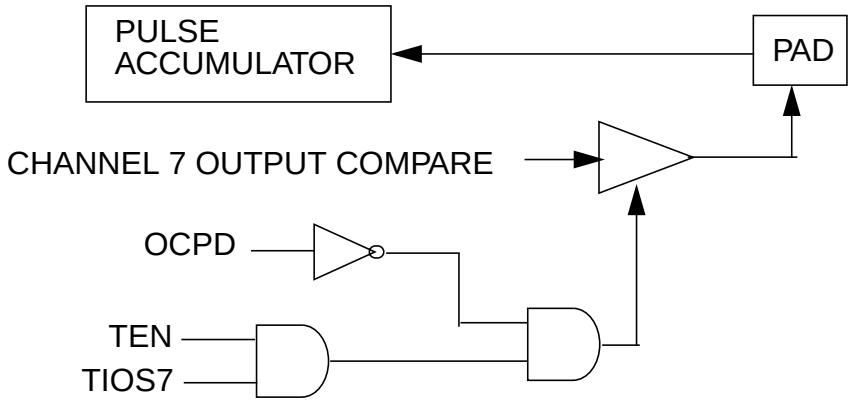

Figure 16-4. Channel 7 Output Compare/Pulse Accumulator Logic

16.2 External Signal Description

The TIM16B8CV2 module has a total of eight external pins.

16.2.1 IOC7 — Input Capture and Output Compare Channel 7 Pin

This pin serves as input capture or output compare for channel 7. This can also be configured as pulse accumulator input.

16.2.2 IOC6 — Input Capture and Output Compare Channel 6 Pin

This pin serves as input capture or output compare for channel 6.

16.2.3 IOC5 — Input Capture and Output Compare Channel 5 Pin

This pin serves as input capture or output compare for channel 5.

16.2.4 IOC4 — Input Capture and Output Compare Channel 4 Pin

This pin serves as input capture or output compare for channel 4. Pin

16.2.5 IOC3 — Input Capture and Output Compare Channel 3 Pin

This pin serves as input capture or output compare for channel 3.

16.2.6 IOC2 — Input Capture and Output Compare Channel 2 Pin

This pin serves as input capture or output compare for channel 2.

16.2.7 IOC1 — Input Capture and Output Compare Channel 1 Pin

This pin serves as input capture or output compare for channel 1.

16.2.8 IOC0 — Input Capture and Output Compare Channel 0 Pin

This pin serves as input capture or output compare for channel 0.

NOTE

For the description of interrupts see Section 16.6, “Interrupts”.

16.3 Memory Map and Register Definition

This section provides a detailed description of all memory and registers.

16.3.1 Module Memory Map

The memory map for the TIM16B8CV2 module is given below in Figure 16-5. The address listed for each register is the address offset. The total address for each register is the sum of the base address for the TIM16B8CV2 module and the address offset for each register.

16.3.2 Register Descriptions

This section consists of register descriptions in address order. Each description includes a standard register diagram with an associated figure number. Details of register bit and field function follow the register diagrams, in bit order.

Register Name		Bit 7	6	5	4	3	2	1	Bit 0
0x0000 TIOS	R/W	IOS7	IOS6	IOS5	IOS4	IOS3	IOS2	IOS1	IOS0
0x0001 CFORC	R	0	0	0	0	0	0	0	0
	W	FOC7	FOC6	FOC5	FOC4	FOC3	FOC2	FOC1	FOC0
0x0002 OC7M	R/W	OC7M7	OC7M6	OC7M5	OC7M4	OC7M3	OC7M2	OC7M1	OC7M0
0x0003 OC7D	R/W	OC7D7	OC7D6	OC7D5	OC7D4	OC7D3	OC7D2	OC7D1	OC7D0
0x0004 TCNTH	R/W	TCNT15	TCNT14	TCNT13	TCNT12	TCNT11	TCNT10	TCNT9	TCNT8
0x0005 TCNTL	R/W	TCNT7	TCNT6	TCNT5	TCNT4	TCNT3	TCNT2	TCNT1	TCNT0

= Unimplemented or Reserved

Figure 16-5. TIM16B8CV2 Register Summary (Sheet 1 of 3)

Register Name		Bit 7	6	5	4	3	2	1	Bit 0
0x0006 TSCR1	R	TEN	TSWAI	TSFRZ	TFFCA	PRNT	0	0	0
	W								
0x0007 TTOV	R/W	TOV7	TOV6	TOV5	TOV4	TOV3	TOV2	TOV1	TOV0
0x0008 TCTL1	R/W	OM7	OL7	OM6	OL6	OM5	OL5	OM4	OL4
0x0009 TCTL2	R/W	OM3	OL3	OM2	OL2	OM1	OL1	OM0	OL0
0x000A TCTL3	R/W	EDG7B	EDG7A	EDG6B	EDG6A	EDG5B	EDG5A	EDG4B	EDG4A
0x000B TCTL4	R/W	EDG3B	EDG3A	EDG2B	EDG2A	EDG1B	EDG1A	EDG0B	EDG0A
0x000C TIE	R/W	C7I	C6I	C5I	C4I	C3I	C2I	C1I	C0I
0x000D TSCR2	R	TOI	0	0	0	TCRE	PR2	PR1	PR0
	W								
0x000E TFLG1	R/W	C7F	C6F	C5F	C4F	C3F	C2F	C1F	C0F
0x000F TFLG2	R	TOF	0	0	0	0	0	0	0
	W								
0x0010–0x001F TCxH–TCxL	R/W	Bit 15	Bit 14	Bit 13	Bit 12	Bit 11	Bit 10	Bit 9	Bit 8
	R/W	Bit 7	Bit 6	Bit 5	Bit 4	Bit 3	Bit 2	Bit 1	Bit 0
0x0020 PACTL	R	0	PAEN	PAMOD	PEDGE	CLK1	CLK0	PAOVI	PAI
	W								
0x0021 PAFLG	R	0	0	0	0	0	0	PAOVF	PAIF
	W								
0x0022 PACNTH	R/W	PACNT15	PACNT14	PACNT13	PACNT12	PACNT11	PACNT10	PACNT9	PACNT8
0x0023 PACNTL	R/W	PACNT7	PACNT6	PACNT5	PACNT4	PACNT3	PACNT2	PACNT1	PACNT0
0x0024–0x002B Reserved	R/W								

= Unimplemented or Reserved

Figure 16-5. TIM16B8CV2 Register Summary (Sheet 2 of 3)

Register Name		Bit 7	6	5	4	3	2	1	Bit 0
0x002C OCPD	R/W	OCPD7	OCPD6	OCPD5	OCPD4	OCPD3	OCPD2	OCPD1	OCPD0
0x002D	R								
0x002E PTPSR	R/W	PTPS7	PTPS6	PTPS5	PTPS4	PTPS3	PTPS2	PTPS1	PTPS0
0x002F Reserved	R/W								

= Unimplemented or Reserved

Figure 16-5. TIM16B8CV2 Register Summary (Sheet 3 of 3)

16.3.2.1 Timer Input Capture/Output Compare Select (TIOS)

Module Base + 0x0000

	7	6	5	4	3	2	1	0
R/W	IOS7	IOS6	IOS5	IOS4	IOS3	IOS2	IOS1	IOS0
Reset	0	0	0	0	0	0	0	0

Figure 16-6. Timer Input Capture/Output Compare Select (TIOS)

Read: Anytime

Write: Anytime

Table 16-2. TIOS Field Descriptions

Field	Description
7:0 IOS[7:0]	**Input Capture or Output Compare Channel Configuration** 0 The corresponding channel acts as an input capture. 1 The corresponding channel acts as an output compare.

16.3.2.2 Timer Compare Force Register (CFORC)

Module Base + 0x0001

	7	6	5	4	3	2	1	0
R	0	0	0	0	0	0	0	0
W	FOC7	FOC6	FOC5	FOC4	FOC3	FOC2	FOC1	FOC0
Reset	0	0	0	0	0	0	0	0

Figure 16-7. Timer Compare Force Register (CFORC)

Read: Anytime but will always return 0x0000 (1 state is transient)

Write: Anytime

Table 16-3. CFORC Field Descriptions

Field	Description
7:0 FOC[7:0]	**Force Output Compare Action for Channel 7:0** — A write to this register with the corresponding data bit(s) set causes the action which is programmed for output compare “x” to occur immediately. The action taken is the same as if a successful comparison had just taken place with the TCx register except the interrupt flag does not get set. **Note:** A channel 7 event, which can be a counter overflow when TTOV[7] is set or a successful output compare on channel 7, overrides any channel 6:0 compares. If forced output compare on any channel occurs at the same time as the successful output compare then forced output compare action will take precedence and interrupt flag won’t get set.

16.3.2.3 Output Compare 7 Mask Register (OC7M)

Module Base + 0x0002

	7	6	5	4	3	2	1	0
R W	OC7M7	OC7M6	OC7M5	OC7M4	OC7M3	OC7M2	OC7M1	OC7M0
Reset	0	0	0	0	0	0	0	0

Figure 16-8. Output Compare 7 Mask Register (OC7M)

Read: Anytime

Write: Anytime

Table 16-4. OC7M Field Descriptions

Field	Description
7:0 OC7M[7:0]	**Output Compare 7 Mask** — A channel 7 event, which can be a counter overflow when TTOV[7] is set or a successful output compare on channel 7, overrides any channel 6:0 compares. For each OC7M bit that is set, the output compare action reflects the corresponding OC7D bit. 0 The corresponding OC7Dx bit in the output compare 7 data register will not be transferred to the timer port on a channel 7 event, even if the corresponding pin is setup for output compare. 1 The corresponding OC7Dx bit in the output compare 7 data register will be transferred to the timer port on a channel 7 event. **Note:** The corresponding channel must also be setup for output compare (IOSx = 1 and OCPDx = 0) for data to be transferred from the output compare 7 data register to the timer port.

16.3.2.4 Output Compare 7 Data Register (OC7D)

Module Base + 0x0003

	7	6	5	4	3	2	1	0
R/W	OC7D7	OC7D6	OC7D5	OC7D4	OC7D3	OC7D2	OC7D1	OC7D0
Reset	0	0	0	0	0	0	0	0

Figure 16-9. Output Compare 7 Data Register (OC7D)

Read: Anytime

Write: Anytime

Table 16-5. OC7D Field Descriptions

Field	Description
7:0 OC7D[7:0]	**Output Compare 7 Data** — A channel 7 event, which can be a counter overflow when TTOV[7] is set or a successful output compare on channel 7, can cause bits in the output compare 7 data register to transfer to the timer port data register depending on the output compare 7 mask register.

16.3.2.5 Timer Count Register (TCNT)

Module Base + 0x0004

	15	14	13	12	11	10	9	9
R/W	TCNT15	TCNT14	TCNT13	TCNT12	TCNT11	TCNT10	TCNT9	TCNT8
Reset	0	0	0	0	0	0	0	0

Figure 16-10. Timer Count Register High (TCNTH)

Module Base + 0x0005

	7	6	5	4	3	2	1	0
R/W	TCNT7	TCNT6	TCNT5	TCNT4	TCNT3	TCNT2	TCNT1	TCNT0
Reset	0	0	0	0	0	0	0	0

Figure 16-11. Timer Count Register Low (TCNTL)

The 16-bit main timer is an up counter.

A full access for the counter register should take place in one clock cycle. A separate read/write for high byte and low byte will give a different result than accessing them as a word.

Read: Anytime

Write: Has no meaning or effect in the normal mode; only writable in special modes (test_mode = 1).

The period of the first count after a write to the TCNT registers may be a different size because the write is not synchronized with the prescaler clock.

16.3.2.6 Timer System Control Register 1 (TSCR1)

Module Base + 0x0006

	7	6	5	4	3	2	1	0
R	TEN	TSWAI	TSFRZ	TFFCA	PRNT	0	0	0
W								
Reset	0	0	0	0	0	0	0	0

= Unimplemented or Reserved

Figure 16-12. Timer System Control Register 1 (TSCR1)

Read: Anytime

Write: Anytime

Table 16-6. TSCR1 Field Descriptions

Field	Description
7 TEN	**Timer Enable** 0 Disables the main timer, including the counter. Can be used for reducing power consumption. 1 Allows the timer to function normally. If for any reason the timer is not active, there is no ÷64 clock for the pulse accumulator because the ÷64 is generated by the timer prescaler.
6 TSWAI	**Timer Module Stops While in Wait** 0 Allows the timer module to continue running during wait. 1 Disables the timer module when the MCU is in the wait mode. Timer interrupts cannot be used to get the MCU out of wait. TSWAI also affects pulse accumulator.
5 TSFRZ	**Timer Stops While in Freeze Mode** 0 Allows the timer counter to continue running while in freeze mode. 1 Disables the timer counter whenever the MCU is in freeze mode. This is useful for emulation. TSFRZ does not stop the pulse accumulator.

Table 16-6. TSCR1 Field Descriptions (continued)

Field	Description
4 TFFCA	**Timer Fast Flag Clear All** 0 Allows the timer flag clearing to function normally. 1 For TFLG1(0x000E), a read from an input capture or a write to the output compare channel (0x0010–0x001F) causes the corresponding channel flag, CnF, to be cleared. For TFLG2 (0x000F), any access to the TCNT register (0x0004, 0x0005) clears the TOF flag. Any access to the PACNT registers (0x0022, 0x0023) clears the PAOVF and PAIF flags in the PAFLG register (0x0021). This has the advantage of eliminating software overhead in a separate clear sequence. Extra care is required to avoid accidental flag clearing due to unintended accesses.
3 PRNT	**Precision Timer** 0 Enables legacy timer. PR0, PR1, and PR2 bits of the TSCR2 register are used for timer counter prescaler selection. 1 Enables precision timer. All bits of the PTPSR register are used for Precision Timer Prescaler Selection, and all bits. This bit is writable only once out of reset.

16.3.2.7 Timer Toggle On Overflow Register 1 (TTOV)

Module Base + 0x0007

	7	6	5	4	3	2	1	0
R W	TOV7	TOV6	TOV5	TOV4	TOV3	TOV2	TOV1	TOV0
Reset	0	0	0	0	0	0	0	0

Figure 16-13. Timer Toggle On Overflow Register 1 (TTOV)

Read: Anytime

Write: Anytime

Table 16-7. TTOV Field Descriptions

Field	Description
7:0 TOV[7:0]	**Toggle On Overflow Bits** — TOVx toggles output compare pin on overflow. This feature only takes effect when in output compare mode. When set, it takes precedence over forced output compare but not channel 7 override events. 0 Toggle output compare pin on overflow feature disabled. 1 Toggle output compare pin on overflow feature enabled.

16.3.2.8 Timer Control Register 1/Timer Control Register 2 (TCTL1/TCTL2)

Module Base + 0x0008

	7	6	5	4	3	2	1	0
R W	OM7	OL7	OM6	OL6	OM5	OL5	OM4	OL4
Reset	0	0	0	0	0	0	0	0

Figure 16-14. Timer Control Register 1 (TCTL1)

Module Base + 0x0009

	7	6	5	4	3	2	1	0
R W	OM3	OL3	OM2	OL2	OM1	OL1	OM0	OL0
Reset	0	0	0	0	0	0	0	0

Figure 16-15. Timer Control Register 2 (TCTL2)

Read: Anytime

Write: Anytime

Table 16-8. TCTL1/TCTL2 Field Descriptions

Field	Description
7:0 OMx	**Output Mode** — These eight pairs of control bits are encoded to specify the output action to be taken as a result of a successful OCx compare. When either OMx or OLx is 1, the pin associated with OCx becomes an output tied to OCx. **Note:** To enable output action by OMx bits on timer port, the corresponding bit in OC7M should be cleared. For an output line to be driven by an OCx the OCPDx must be cleared.
7:0 OLx	**Output Level** — These eight pairs of control bits are encoded to specify the output action to be taken as a result of a successful OCx compare. When either OMx or OLx is 1, the pin associated with OCx becomes an output tied to OCx. **Note:** To enable output action by OLx bits on timer port, the corresponding bit in OC7M should be cleared. For an output line to be driven by an OCx the OCPDx must be cleared.

Table 16-9. Compare Result Output Action

OMx	OLx	Action
0	0	No output compare action on the timer output signal
0	1	Toggle OCx output line
1	0	Clear OCx output line to zero
1	1	Set OCx output line to one

To operate the 16-bit pulse accumulator independently of input capture or output compare 7 and 0 respectively the user must set the corresponding bits IOSx = 1, OMx = 0 and OLx = 0. OC7M7 in the OC7M register must also be cleared.

To enable output action using the OM7 and OL7 bits on the timer port,the corresponding bit OC7M7 in the OC7M register must also be cleared. The settings for these bits can be seen in Table 16-10

Table 16-10. The OC7 and OCx event priority

OC7M7=0				OC7M7=1			
OC7Mx=1		OC7Mx=0		OC7Mx=1		OC7Mx=0	
TC7=TCx	TC7>TCx	TC7=TCx	TC7>TCx	TC7=TCx	TC7>TCx	TC7=TCx	TC7>TCx
IOCx=OC7Dx IOC7=OM7/OL7	IOCx=OC7Dx +OMx/OLx IOC7=OM7/OL7	IOCx=OMx/OLx IOC7=OM7/OL7		IOCx=OC7Dx IOC7=OC7D7	IOCx=OC7Dx +OMx/OLx IOC7=OC7D7	IOCx=OMx/OLx IOC7=OC7D7	

Note: in Table 16-10, the IOS7 and IOSx should be set to 1

IOSx is the register TIOS bit x,

OC7Mx is the register OC7M bit x,

TCx is timer Input Capture/Output Compare register,

IOCx is channel x,

OMx/OLx is the register TCTL1/TCTL2,

OC7Dx is the register OC7D bit x.

IOCx = OC7Dx+ OMx/OLx, means that both OC7 event and OCx event will change channel x value.

16.3.2.9 Timer Control Register 3/Timer Control Register 4 (TCTL3 and TCTL4)

Module Base + 0x000A

	7	6	5	4	3	2	1	0
R W	EDG7B	EDG7A	EDG6B	EDG6A	EDG5B	EDG5A	EDG4B	EDG4A
Reset	0	0	0	0	0	0	0	0

Figure 16-16. Timer Control Register 3 (TCTL3)

Module Base + 0x000B

	7	6	5	4	3	2	1	0
R W	EDG3B	EDG3A	EDG2B	EDG2A	EDG1B	EDG1A	EDG0B	EDG0A
Reset	0	0	0	0	0	0	0	0

Figure 16-17. Timer Control Register 4 (TCTL4)

Read: Anytime

Write: Anytime.

Table 16-11. TCTL3/TCTL4 Field Descriptions

Field	Description
7:0 EDGnB EDGnA	**Input Capture Edge Control** — These eight pairs of control bits configure the input capture edge detector circuits.

Table 16-12. Edge Detector Circuit Configuration

EDGnB	EDGnA	Configuration
0	0	Capture disabled
0	1	Capture on rising edges only
1	0	Capture on falling edges only
1	1	Capture on any edge (rising or falling)

16.3.2.10 Timer Interrupt Enable Register (TIE)

Module Base + 0x000C

	7	6	5	4	3	2	1	0
R W	C7I	C6I	C5I	C4I	C3I	C2I	C1I	C0I
Reset	0	0	0	0	0	0	0	0

Figure 16-18. Timer Interrupt Enable Register (TIE)

Read: Anytime

Write: Anytime.

Table 16-13. TIE Field Descriptions

Field	Description
7:0 C7I:C0I	**Input Capture/Output Compare "x" Interrupt Enable —** The bits in TIE correspond bit-for-bit with the bits in the TFLG1 status register. If cleared, the corresponding flag is disabled from causing a hardware interrupt. If set, the corresponding flag is enabled to cause a interrupt.

16.3.2.11 Timer System Control Register 2 (TSCR2)

Module Base + 0x000D

	7	6	5	4	3	2	1	0
R	TOI	0	0	0	TCRE	PR2	PR1	PR0
W								
Reset	0	0	0	0	0	0	0	0

= Unimplemented or Reserved

Figure 16-19. Timer System Control Register 2 (TSCR2)

Read: Anytime

Write: Anytime.

Table 16-14. TSCR2 Field Descriptions

Field	Description
7 TOI	**Timer Overflow Interrupt Enable** 0 Interrupt inhibited. 1 Hardware interrupt requested when TOF flag set.
3 TCRE	**Timer Counter Reset Enable** — This bit allows the timer counter to be reset by a successful output compare 7 event. This mode of operation is similar to an up-counting modulus counter. 0 Counter reset inhibited and counter free runs. 1 Counter reset by a successful output compare 7. **Note:** If TC7 = 0x0000 and TCRE = 1, TCNT will stay at 0x0000 continuously. If TC7 = 0xFFFF and TCRE = 1, TOF will never be set when TCNT is reset from 0xFFFF to 0x0000. **Note:** TCRE=1 and TC7!=0, the TCNT cycle period will be TC7 x "prescaler counter width" + "1 Bus Clock", for a more detail explanation please refer to Section 16.4.3, “Output Compare
2 PR[2:0]	**Timer Prescaler Select** — These three bits select the frequency of the timer prescaler clock derived from the Bus Clock as shown in Table 16-15.

Table 16-15. Timer Clock Selection

PR2	PR1	PR0	Timer Clock
0	0	0	Bus Clock / 1
0	0	1	Bus Clock / 2
0	1	0	Bus Clock / 4
0	1	1	Bus Clock / 8
1	0	0	Bus Clock / 16
1	0	1	Bus Clock / 32
1	1	0	Bus Clock / 64
1	1	1	Bus Clock / 128

NOTE

The newly selected prescale factor will not take effect until the next synchronized edge where all prescale counter stages equal zero.

16.3.2.12 Main Timer Interrupt Flag 1 (TFLG1)

Module Base + 0x000E

	7	6	5	4	3	2	1	0
R W	C7F	C6F	C5F	C4F	C3F	C2F	C1F	C0F
Reset	0	0	0	0	0	0	0	0

Figure 16-20. Main Timer Interrupt Flag 1 (TFLG1)

Read: Anytime

Write: Used in the clearing mechanism (set bits cause corresponding bits to be cleared). Writing a zero will not affect current status of the bit.

Table 16-16. TRLG1 Field Descriptions

Field	Description
7:0 C[7:0]F	**Input Capture/Output Compare Channel "x" Flag** — These flags are set when an input capture or output compare event occurs. Clearing requires writing a one to the corresponding flag bit while TEN or PAEN is set to one. When TFFCA bit in TSCR register is set, a read from an input capture or a write into an output compare channel (0x0010–0x001F) will cause the corresponding channel flag CxF to be cleared.

16.3.2.13 Main Timer Interrupt Flag 2 (TFLG2)

Module Base + 0x000F

	7	6	5	4	3	2	1	0
R	TOF	0	0	0	0	0	0	0
W								
Reset	0	0	0	0	0	0	0	0

Unimplemented or Reserved

Figure 16-21. Main Timer Interrupt Flag 2 (TFLG2)

TFLG2 indicates when interrupt conditions have occurred. To clear a bit in the flag register, write the bit to one while TEN bit of TSCR1 or PAEN bit of PACTL is set to one.

Read: Anytime

Write: Used in clearing mechanism (set bits cause corresponding bits to be cleared).

Any access to TCNT will clear TFLG2 register if the TFFCA bit in TSCR register is set.

Table 16-17. TRLG2 Field Descriptions

Field	Description
7 TOF	**Timer Overflow Flag** — Set when 16-bit free-running timer overflows from 0xFFFF to 0x0000. Clearing this bit requires writing a one to bit 7 of TFLG2 register while the TEN bit of TSCR1 or PAEN bit of PACTL is set to one (See also TCRE control bit explanation.)

16.3.2.14 Timer Input Capture/Output Compare Registers High and Low 0–7 (TCxH and TCxL)

Module Base + 0x0010 = TC0H 0x0018 = TC4H
0x0012 = TC1H 0x001A = TC5H
0x0014 = TC2H 0x001C = TC6H
0x0016 = TC3H 0x001E = TC7H

	15	14	13	12	11	10	9	0
R/W	Bit 15	Bit 14	Bit 13	Bit 12	Bit 11	Bit 10	Bit 9	Bit 8
Reset	0	0	0	0	0	0	0	0

Figure 16-22. Timer Input Capture/Output Compare Register x High (TCxH)

Module Base + 0x0011 = TC0L 0x0019 = TC4L
0x0013 = TC1L 0x001B = TC5L
0x0015 = TC2L 0x001D = TC6L
0x0017 = TC3L 0x001F = TC7L

	7	6	5	4	3	2	1	0
R/W	Bit 7	Bit 6	Bit 5	Bit 4	Bit 3	Bit 2	Bit 1	Bit 0
Reset	0	0	0	0	0	0	0	0

Figure 16-23. Timer Input Capture/Output Compare Register x Low (TCxL)

Depending on the TIOS bit for the corresponding channel, these registers are used to latch the value of the free-running counter when a defined transition is sensed by the corresponding input capture edge detector or to trigger an output action for output compare.

Read: Anytime

Write: Anytime for output compare function.Writes to these registers have no meaning or effect during input capture. All timer input capture/output compare registers are reset to 0x0000.

NOTE

Read/Write access in byte mode for high byte should takes place before low byte otherwise it will give a different result.

16.3.2.15 16-Bit Pulse Accumulator Control Register (PACTL)

Module Base + 0x0020

	7	6	5	4	3	2	1	0
R	0	PAEN	PAMOD	PEDGE	CLK1	CLK0	PAOVI	PAI
W								
Reset	0	0	0	0	0	0	0	0

Unimplemented or Reserved

Figure 16-24. 16-Bit Pulse Accumulator Control Register (PACTL)

When PAEN is set, the PACT is enabled.The PACT shares the input pin with IOC7.

Read: Any time

Write: Any time

Table 16-18. PACTL Field Descriptions

Field	Description
6 PAEN	**Pulse Accumulator System Enable** — PAEN is independent from TEN. With timer disabled, the pulse accumulator can function unless pulse accumulator is disabled. 0 16-Bit Pulse Accumulator system disabled. 1 Pulse Accumulator system enabled.
5 PAMOD	**Pulse Accumulator Mode** — This bit is active only when the Pulse Accumulator is enabled (PAEN = 1). See Table 16-19. 0 Event counter mode. 1 Gated time accumulation mode.
4 PEDGE	**Pulse Accumulator Edge Control** — This bit is active only when the Pulse Accumulator is enabled (PAEN = 1). For PAMOD bit = 0 (event counter mode). See Table 16-19. 0 Falling edges on IOC7 pin cause the count to be incremented. 1 Rising edges on IOC7 pin cause the count to be incremented. For PAMOD bit = 1 (gated time accumulation mode). 0 IOC7 input pin high enables M (bus clock) divided by 64 clock to Pulse Accumulator and the trailing falling edge on IOC7 sets the PAIF flag. 1 IOC7 input pin low enables M (bus clock) divided by 64 clock to Pulse Accumulator and the trailing rising edge on IOC7 sets the PAIF flag.
3:2 CLK[1:0]	**Clock Select Bits —** Refer to Table 16-20.
1 PAOVI	**Pulse Accumulator Overflow Interrupt Enable** 0 Interrupt inhibited. 1 Interrupt requested if PAOVF is set.
0 PAI	**Pulse Accumulator Input Interrupt Enable** 0 Interrupt inhibited. 1 Interrupt requested if PAIF is set.

Table 16-19. Pin Action

PAMOD	PEDGE	Pin Action
0	0	Falling edge
0	1	Rising edge
1	0	Div. by 64 clock enabled with pin high level
1	1	Div. by 64 clock enabled with pin low level

NOTE

If the timer is not active (TEN = 0 in TSCR), there is no divide-by-64 because the ÷64 clock is generated by the timer prescaler.

Table 16-20. Timer Clock Selection

CLK1	CLK0	Timer Clock
0	0	Use timer prescaler clock as timer counter clock
0	1	Use PACLK as input to timer counter clock
1	0	Use PACLK/256 as timer counter clock frequency
1	1	Use PACLK/65536 as timer counter clock frequency

For the description of PACLK please refer Figure 16-30**.**

If the pulse accumulator is disabled (PAEN = 0), the prescaler clock from the timer is always used as an input clock to the timer counter. The change from one selected clock to the other happens immediately after these bits are written.

16.3.2.16 Pulse Accumulator Flag Register (PAFLG)

Module Base + 0x0021

	7	6	5	4	3	2	1	0
R	0	0	0	0	0	0	PAOVF	PAIF
W								
Reset	0	0	0	0	0	0	0	0

Unimplemented or Reserved

Figure 16-25. Pulse Accumulator Flag Register (PAFLG)

Read: Anytime

Write: Anytime

When the TFFCA bit in the TSCR register is set, any access to the PACNT register will clear all the flags in the PAFLG register. Timer module or Pulse Accumulator must stay enabled (TEN=1 or PAEN=1) while clearing these bits.

Table 16-21. PAFLG Field Descriptions

Field	Description
1 PAOVF	**Pulse Accumulator Overflow Flag** — Set when the 16-bit pulse accumulator overflows from 0xFFFF to 0x0000. Clearing this bit requires writing a one to this bit in the PAFLG register while TEN bit of TSCR1 or PAEN bit of PACTL register is set to one.
0 PAIF	**Pulse Accumulator Input edge Flag** — Set when the selected edge is detected at the IOC7 input pin.In event mode the event edge triggers PAIF and in gated time accumulation mode the trailing edge of the gate signal at the IOC7 input pin triggers PAIF. Clearing this bit requires writing a one to this bit in the PAFLG register while TEN bit of TSCR1 or PAEN bit of PACTL register is set to one. Any access to the PACNT register will clear all the flags in this register when TFFCA bit in register TSCR(0x0006) is set.

16.3.2.17 Pulse Accumulators Count Registers (PACNT)

Module Base + 0x0022

	15	14	13	12	11	10	9	0
R W	PACNT15	PACNT14	PACNT13	PACNT12	PACNT11	PACNT10	PACNT9	PACNT8
Reset	0	0	0	0	0	0	0	0

Figure 16-26. Pulse Accumulator Count Register High (PACNTH)

Module Base + 0x0023

	7	6	5	4	3	2	1	0
R W	PACNT7	PACNT6	PACNT5	PACNT4	PACNT3	PACNT2	PACNT1	PACNT0
Reset	0	0	0	0	0	0	0	0

Figure 16-27. Pulse Accumulator Count Register Low (PACNTL)

Read: Anytime

Write: Anytime

These registers contain the number of active input edges on its input pin since the last reset.

When PACNT overflows from 0xFFFF to 0x0000, the Interrupt flag PAOVF in PAFLG (0x0021) is set.

Full count register access should take place in one clock cycle. A separate read/write for high byte and low byte will give a different result than accessing them as a word.

NOTE

Reading the pulse accumulator counter registers immediately after an active edge on the pulse accumulator input pin may miss the last count because the input has to be synchronized with the bus clock first.

16.3.2.18 Output Compare Pin Disconnect Register(OCPD)

Module Base + 0x002C

	7	6	5	4	3	2	1	0
R W	OCPD7	OCPD6	OCPD5	OCPD4	OCPD3	OCPD2	OCPD1	OCPD0
Reset	0	0	0	0	0	0	0	0

Figure 16-28. Ouput Compare Pin Disconnect Register (OCPD)

Read: Anytime

Write: Anytime

All bits reset to zero.

Table 16-22. OCPD Field Description

Field	Description
OCPD[7:0}	**Output Compare Pin Disconnect Bits** 0 Enables the timer channel port. Ouptut Compare action will occur on the channel pin. These bits do not affect the input capture or pulse accumulator functions 1 Disables the timer channel port. Output Compare action will not occur on the channel pin, but the output compare flag still become set .

16.3.2.19 Precision Timer Prescaler Select Register (PTPSR)

Module Base + 0x002E

	7	6	5	4	3	2	1	0
R W	PTPS7	PTPS6	PTPS5	PTPS4	PTPS3	PTPS2	PTPS1	PTPS0
Reset	0	0	0	0	0	0	0	0

Figure 16-29. Precision Timer Prescaler Select Register (PTPSR)

Read: Anytime

Write: Anytime

All bits reset to zero.

Table 16-23. PTPSR Field Descriptions

Field	Description
7:0 PTPS[7:0]	**Precision Timer Prescaler Select Bits** — These eight bits specify the division rate of the main Timer prescaler. These are effective only when the PRNT bit of TSCR1 is set to 1. Table 16-24 shows some selection examples in this case. The newly selected prescale factor will not take effect until the next synchronized edge where all prescale counter stages equal zero.

The Prescaler can be calculated as follows depending on logical value of the PTPS[7:0] and PRNT bit:

PRNT = 1 : Prescaler = PTPS[7:0] + 1

Table 16-24. Precision Timer Prescaler Selection Examples when PRNT = 1

PTPS7	PTPS6	PTPS5	PTPS4	PTPS3	PTPS2	PTPS1	PTPS0	Prescale Factor
0	0	0	0	0	0	0	0	1
0	0	0	0	0	0	0	1	2
0	0	0	0	0	0	1	0	3
0	0	0	0	0	0	1	1	4
0	0	0	0	0	1	0	0	5
0	0	0	0	0	1	0	1	6
0	0	0	0	0	1	1	0	7
0	0	0	0	0	1	1	1	8
0	0	0	0	1	1	1	1	16
0	0	0	1	1	1	1	1	32
0	0	1	1	1	1	1	1	64
0	1	1	1	1	1	1	1	128
1	1	1	1	1	1	1	1	256

16.4 Functional Description

This section provides a complete functional description of the timer TIM16B8CV2 block. Please refer to the detailed timer block diagram in Figure 16-30 as necessary.

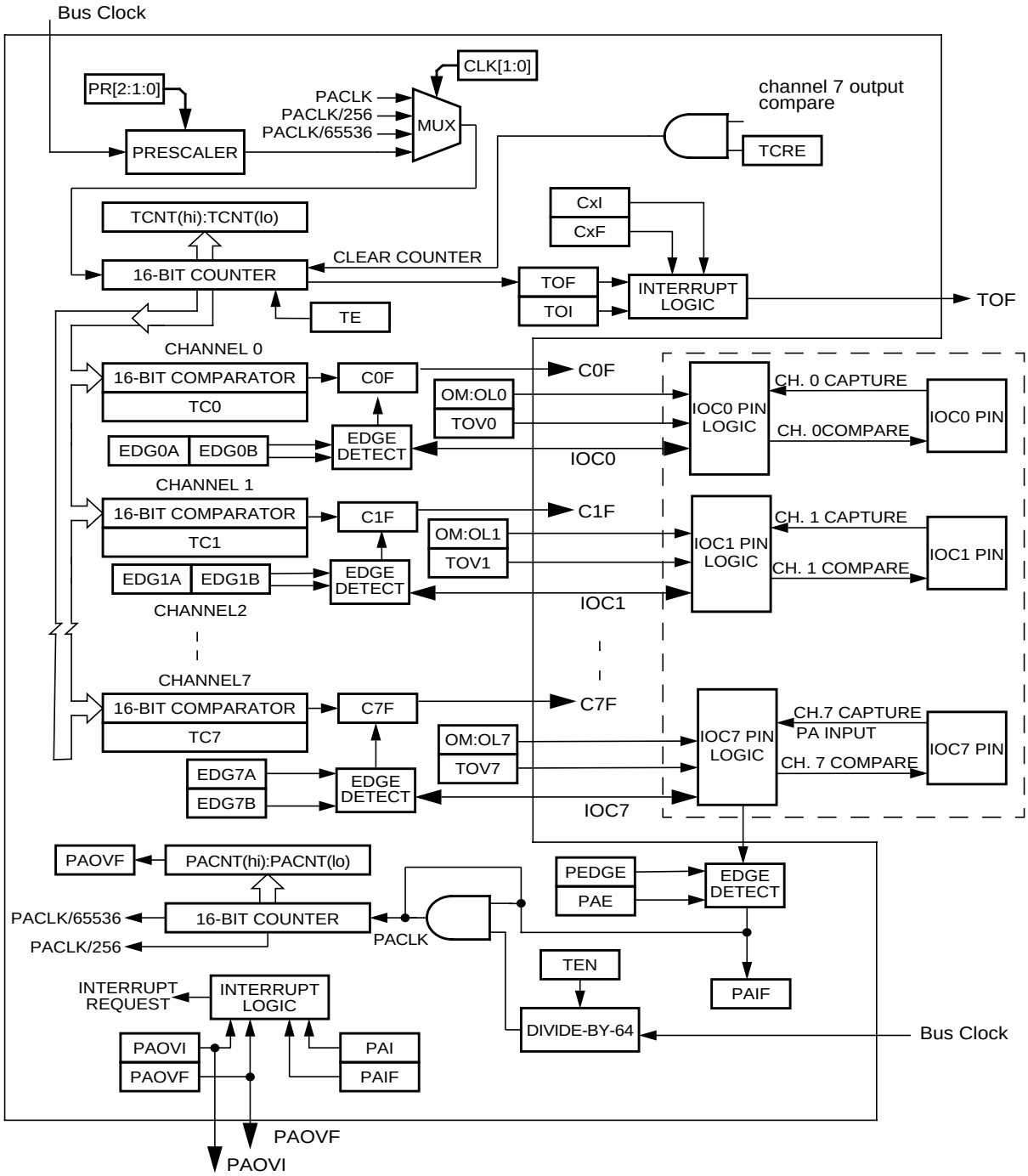

Figure 16-30. Detailed Timer Block Diagram

16.4.1 Prescaler

The prescaler divides the bus clock by 1,2,4,8,16,32,64 or 128. The prescaler select bits, PR[2:0], select the prescaler divisor. PR[2:0] are in timer system control register 2 (TSCR2).

The prescaler divides the bus clock by a prescalar value. Prescaler select bits PR[2:0] of in timer system control register 2 (TSCR2) are set to define a prescalar value that generates a divide by 1, 2, 4, 8, 16, 32, 64 and 128 when the PRNT bit in TSCR1 is disabled.

By enabling the PRNT bit of the TSCR1 register, the performance of the timer can be enhanced. In this case, it is possible to set additional prescaler settings for the main timer counter in the present timer by using PTPSR[7:0] bits of PTPSR register.

16.4.2 Input Capture

Clearing the I/O (input/output) select bit, IOSx, configures channel x as an input capture channel. The input capture function captures the time at which an external event occurs. When an active edge occurs on the pin of an input capture channel, the timer transfers the value in the timer counter into the timer channel registers, TCx.

The minimum pulse width for the input capture input is greater than two bus clocks.

An input capture on channel x sets the CxF flag. The CxI bit enables the CxF flag to generate interrupt requests. Timer module or Pulse Accumulator must stay enabled (TEN bit of TSCR1 or PAEN bit of PACTL regsiter must be set to one) while clearing CxF (writing one to CxF).

16.4.3 Output Compare

Setting the I/O select bit, IOSx, configures channel x as an output compare channel. The output compare function can generate a periodic pulse with a programmable polarity, duration, and frequency. When the timer counter reaches the value in the channel registers of an output compare channel, the timer can set, clear, or toggle the channel pin if the corresponding OCPDx bit is set to zero. An output compare on channel x sets the CxF flag. The CxI bit enables the CxF flag to generate interrupt requests. Timer module or Pulse Accumulator must stay enabled (TEN bit of TSCR1 or PAEN bit of PACTL regsiter must be set to one) while clearing CxF (writing one to CxF).

The output mode and level bits, OMx and OLx, select set, clear, toggle on output compare. Clearing both OMx and OLx results in no output compare action on the output compare channel pin.

Setting a force output compare bit, FOCx, causes an output compare on channel x. A forced output compare does not set the channel flag.

A channel 7 event, which can be a counter overflow when TTOV[7] is set or a successful output compare on channel 7, overrides output compares on all other output compare channels. The output compare 7 mask register masks the bits in the output compare 7 data register. The timer counter reset enable bit, TCRE, enables channel 7 output compares to reset the timer counter. A channel 7 output compare can reset the timer counter even if the IOC7 pin is being used as the pulse accumulator input.

Writing to the timer port bit of an output compare pin does not affect the pin state. The value written is stored in an internal latch. When the pin becomes available for general-purpose output, the last value written to the bit appears at the pin.

When TCRE is set and TC7 is not equal to 0, then TCNT will cycle from 0 to TC7. When TCNT reaches TC7 value, it will last only one bus cycle then reset to 0.

Note: in Figure 16-31,if PR[2:0] is equal to 0, one prescaler counter equal to one bus clock

Figure 16-31. The TCNT cycle diagram under TCRE=1 condition

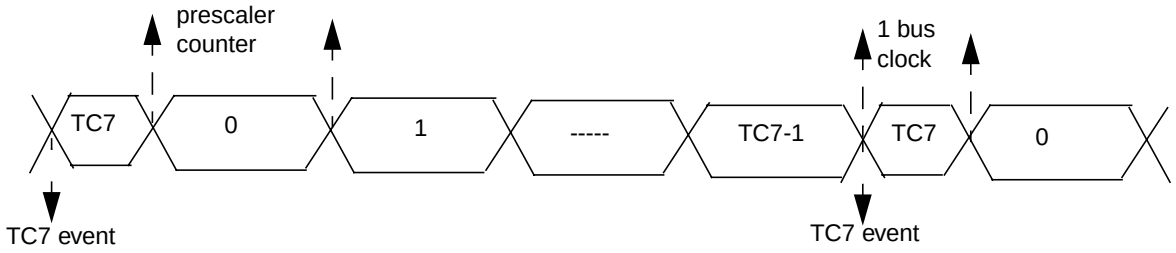

16.4.3.1 OC Channel Initialization

Internal register whose output drives OCx can be programmed before timer drives OCx. The desired state can be programmed to this Internal register by writing a one to CFORCx bit with TIOSx, OCPDx and TEN bits set to one. Setting OCPDx to zero allows Interal register to drive the programmed state to OCx. This allows a glitch free switch over of port from general purpose I/O to timer output once the OCPDx bit is set to zero.

16.4.4 Pulse Accumulator

The pulse accumulator (PACNT) is a 16-bit counter that can operate in two modes:

Event counter mode — Counting edges of selected polarity on the pulse accumulator input pin, PAI.

Gated time accumulation mode — Counting pulses from a divide-by-64 clock. The PAMOD bit selects the mode of operation.

The minimum pulse width for the PAI input is greater than two bus clocks.

16.4.5 Event Counter Mode

Clearing the PAMOD bit configures the PACNT for event counter operation. An active edge on the IOC7 pin increments the pulse accumulator counter. The PEDGE bit selects falling edges or rising edges to increment the count.

NOTE

The PACNT input and timer channel 7 use the same pin IOC7. To use the IOC7, disconnect it from the output logic by clearing the channel 7 output mode and output level bits, OM7 and OL7. Also clear the channel 7 output compare 7 mask bit, OC7M7.

The Pulse Accumulator counter register reflect the number of active input edges on the PACNT input pin since the last reset.

The PAOVF bit is set when the accumulator rolls over from 0xFFFF to 0x0000. The pulse accumulator overflow interrupt enable bit, PAOVI, enables the PAOVF flag to generate interrupt requests.

NOTE

The pulse accumulator counter can operate in event counter mode even when the timer enable bit, TEN, is clear.

16.4.6 Gated Time Accumulation Mode

Setting the PAMOD bit configures the pulse accumulator for gated time accumulation operation. An active level on the PACNT input pin enables a divided-by-64 clock to drive the pulse accumulator. The PEDGE bit selects low levels or high levels to enable the divided-by-64 clock.

The trailing edge of the active level at the IOC7 pin sets the PAIF. The PAI bit enables the PAIF flag to generate interrupt requests.

The pulse accumulator counter register reflect the number of pulses from the divided-by-64 clock since the last reset.

NOTE

The timer prescaler generates the divided-by-64 clock. If the timer is not active, there is no divided-by-64 clock.

16.5 Resets

The reset state of each individual bit is listed within Section 16.3, “Memory Map and Register Definition” which details the registers and their bit fields.

16.6 Interrupts

This section describes interrupts originated by the TIM16B8CV2 block. Table 16-25 lists the interrupts generated by the TIM16B8CV2 to communicate with the MCU.

Table 16-25. TIM16B8CV1 Interrupts

Interrupt	Offset[1]	Vector[1]	Priority[1]	Source	Description
C[7:0]F	—	—	—	Timer Channel 7–0	Active high timer channel interrupts 7–0
PAOVI	—	—	—	Pulse Accumulator Input	Active high pulse accumulator input interrupt
PAOVF	—	—	—	Pulse Accumulator Overflow	Pulse accumulator overflow interrupt
TOF	—	—	—	Timer Overflow	Timer Overflow interrupt

[1] Chip Dependent.

The TIM16B8CV2 uses a total of 11 interrupt vectors. The interrupt vector offsets and interrupt numbers are chip dependent.

16.6.1 Channel [7:0] Interrupt (C[7:0]F)

This active high outputs will be asserted by the module to request a timer channel 7 – 0 interrupt to be serviced by the system controller.

16.6.2 Pulse Accumulator Input Interrupt (PAOVI)

This active high output will be asserted by the module to request a timer pulse accumulator input interrupt to be serviced by the system controller.

16.6.3 Pulse Accumulator Overflow Interrupt (PAOVF)

This active high output will be asserted by the module to request a timer pulse accumulator overflow interrupt to be serviced by the system controller.

16.6.4 Timer Overflow Interrupt (TOF)

This active high output will be asserted by the module to request a timer overflow interrupt to be serviced by the system controller.

Chapter 17
Voltage Regulator (S12VREGL3V3V1)

Table 17-1. Revision History Table

Rev. No. (Item No.)	Date (Submitted By)	Sections Affected	Substantial Change(s)
V01.02	09 Sep 2005		Updates for API external access and LVR flags.
V01.03	23 Sep 2005		VAE reset value is 1.
V01.04	08 Jun 2007		Added temperature sensor to customer information

17.1 Introduction

Module VREG_3V3 is a tri output voltage regulator that provides two separate 1.84V (typical) supplies differing in the amount of current that can be sourced and a 2.82V (typical) supply. The regulator input voltage range is from 3.3V up to 5V (typical).

17.1.1 Features

Module VREG_3V3 includes these distinctive features:

- Three parallel, linear voltage regulators with bandgap reference
- Low-voltage detect (LVD) with low-voltage interrupt (LVI)
- Power-on reset (POR)
- Low-voltage reset (LVR)
- High Temperature Detect (HTD) with High Temperature Interrupt (HTI)
- Autonomous periodical interrupt (API)

17.1.2 Modes of Operation

There are three modes VREG_3V3 can operate in:

1. Full performance mode (FPM) (MCU is not in stop mode)

   The regulator is active, providing the nominal supply voltages with full current sourcing capability. Features LVD (low-voltage detect), LVR (low-voltage reset), and POR (power-on reset) and HTD (High Temperature Detect) are available. The API is available.

2. Reduced power mode (RPM) (MCU is in stop mode)

   The purpose is to reduce power consumption of the device. The output voltage may degrade to a lower value than in full performance mode, additionally the current sourcing capability is substantially reduced. Only the POR is available in this mode, LVD, LVR and HTD are disabled. The API is available.

3. Shutdown mode

   Controlled by VREGEN (see device level specification for connectivity of VREGEN).

   This mode is characterized by minimum power consumption. The regulator outputs are in a high-impedance state, only the POR feature is available, LVD, LVR and HTD are disabled. The API internal RC oscillator clock is not available.

   This mode must be used to disable the chip internal regulator VREG_3V3, i.e., to bypass the VREG_3V3 to use external supplies.

17.1.3 Block Diagram

Figure 17-1 shows the function principle of VREG_3V3 by means of a block diagram. The regulator core REG consists of three parallel subblocks, REG1, REG2 and REG3, providing three independent output voltages.

Figure 17-1. VREG_3V3 Block Diagram

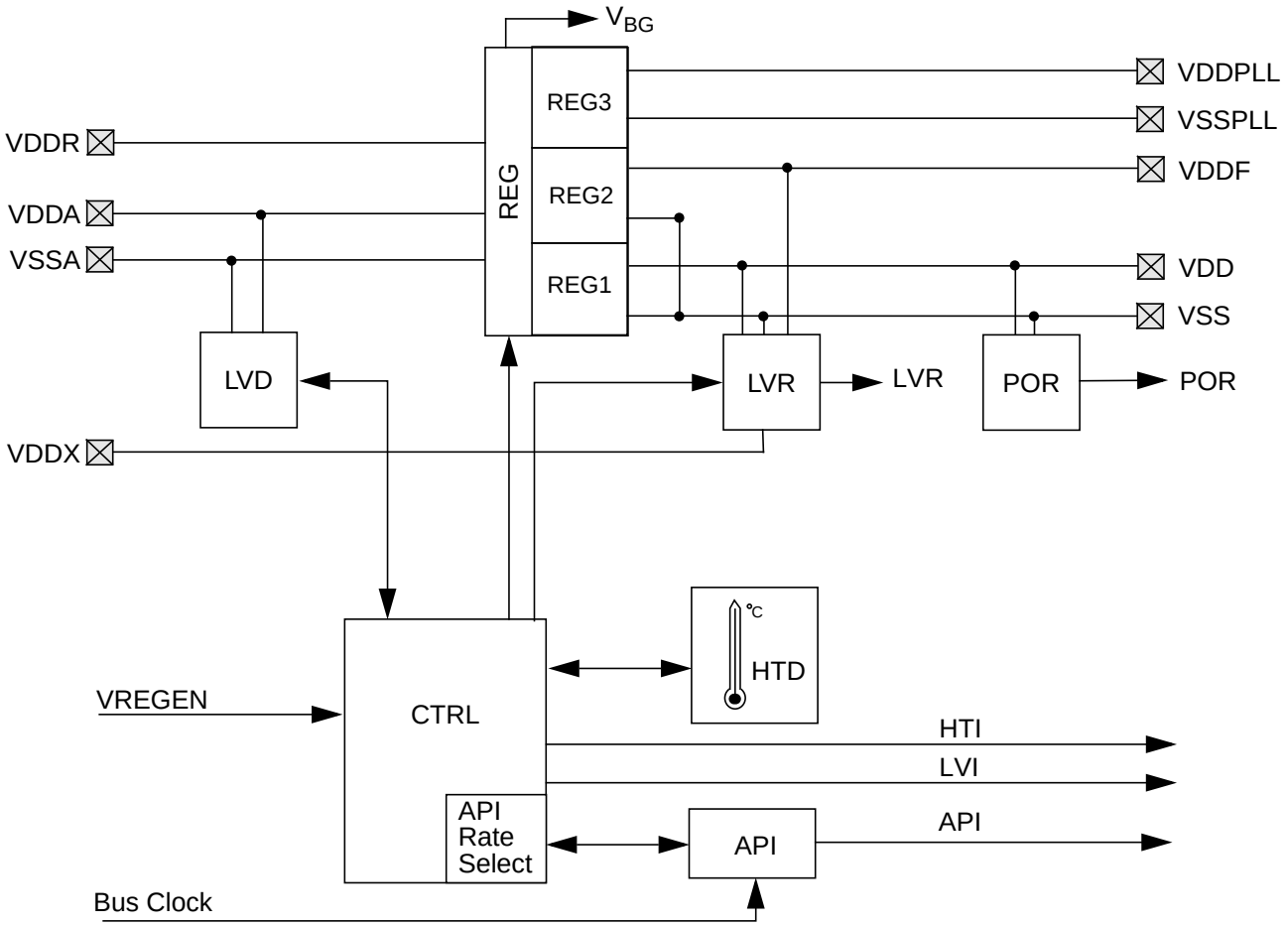

LVD: Low Voltage Detect	REG: Regulator Core
LVR: Low Voltage Reset	CTRL: Regulator Control
POR: Power-on Reset	API: Auto. Periodical Interrupt
HTD: High Temperature Detect	⊠ PIN

17.2 External Signal Description

Due to the nature of VREG_3V3 being a voltage regulator providing the chip internal power supply voltages, most signals are power supply signals connected to pads.

Table 17-2 shows all signals of VREG_3V3 associated with pins.

Table 17-2. Signal Properties

Name	Function	Reset State	Pull Up
VDDR	Power input (positive supply)	—	—
VDDA	Quiet input (positive supply)	—	—
VSSA	Quiet input (ground)	—	—
VDDX	Power input (positive supply)	—	—
VDD	Primary output (positive supply)	—	—
VSS	Primary output (ground)	—	—
VDDF	Secondary output (positive supply)	—	—
VDDPLL	Tertiary output (positive supply)	—	—
VSSPLL	Tertiary output (ground)	—	—
VREGEN (optional)	Optional Regulator Enable	—	—
VREG_API (optional)	VREG Autonomous Periodical Interrupt output	—	—

NOTE

Check device level specification for connectivity of the signals.

17.2.1 VDDR — Regulator Power Input Pins

Signal VDDR is the power input of VREG_3V3. All currents sourced into the regulator loads flow through this pin. A chip external decoupling capacitor (100 nF...220 nF, X7R ceramic) between VDDR and VSSR (if VSSR is not available VSS) can smooth ripple on VDDR.

For entering Shutdown Mode, pin VDDR should also be tied to ground on devices without VREGEN pin.

17.2.2 VDDA, VSSA — Regulator Reference Supply Pins

Signals VDDA/VSSA, which are supposed to be relatively quiet, are used to supply the analog parts of the regulator. Internal precision reference circuits are supplied from these signals. A chip external decoupling capacitor (100 nF...220 nF, X7R ceramic) between VDDA and VSSA can further improve the quality of this supply.

17.2.3 VDD, VSS — Regulator Output1 (Core Logic) Pins

Signals VDD/VSS are the primary outputs of VREG_3V3 that provide the power supply for the core logic. These signals are connected to device pins to allow external decoupling capacitors (220 nF, X7R ceramic).

In Shutdown Mode an external supply driving VDD/VSS can replace the voltage regulator.

17.2.4 VDDF — Regulator Output2 (NVM Logic) Pins

Signals VDDF/VSS are the secondary outputs of VREG_3V3 that provide the power supply for the NVM logic. These signals are connected to device pins to allow external decoupling capacitors (220 nF, X7R ceramic).

In Shutdown Mode an external supply driving VDDF/VSS can replace the voltage regulator.

17.2.5 VDDPLL, VSSPLL — Regulator Output3 (PLL) Pins

Signals VDDPLL/VSSPLL are the secondary outputs of VREG_3V3 that provide the power supply for the PLL and oscillator. These signals are connected to device pins to allow external decoupling capacitors (100 nF...220 nF, X7R ceramic).

In Shutdown Mode, an external supply driving VDDPLL/VSSPLL can replace the voltage regulator.

17.2.6 VDDX — Power Input Pin

Signals VDDX/VSS are monitored by VREG_3V3 with the LVR feature.

17.2.7 VREGEN — Optional Regulator Enable Pin

This optional signal is used to shutdown VREG_3V3. In that case, VDD/VSS and VDDPLL/VSSPLL must be provided externally. Shutdown mode is entered with VREGEN being low. If VREGEN is high, the VREG_3V3 is either in Full Performance Mode or in Reduced Power Mode.

For the connectivity of VREGEN, see device specification.

NOTE

Switching from FPM or RPM to shutdown of VREG_3V3 and vice versa is not supported while MCU is powered.

17.2.8 VREG_API — Optional Autonomous Periodical Interrupt Output Pin

This pin provides the signal selected via APIEA if system is set accordingly. See 17.3.2.3, “Autonomous Periodical Interrupt Control Register (VREGAPICL) and 17.4.8, “Autonomous Periodical Interrupt (API) for details.

For the connectivity of VREG_API, see device specification.

17.3 Memory Map and Register Definition

This section provides a detailed description of all registers accessible in VREG_3V3.

If enabled in the system, the VREG_3V3 will abort all read and write accesses to reserved registers within it’s memory slice. See device level specification for details.

17.3.1 Module Memory Map

A summary of the registers associated with the VREG_3V3 sub-block is shown in Table 17-3. Detailed descriptions of the registers and bits are given in the subsections that follow

Address	Name		Bit 7	6	5	4	3	2	1	Bit 0
0x02F0	VREGHTCL	R	0	0	VSEL	VAE	HTEN	HTDS	HTIE	HTIF
		W								
0x02F1	VREGCTRL	R	0	0	0	0	0	LVDS	LVIE	LVIF
		W								
0x02F2	VREGAPICL	R	APICLK	0	0	APIFES	APIEA	APIFE	APIE	APIF
		W								
0x02F3	VREGAPITR	R	APITR5	APITR4	APITR3	APITR2	APITR1	APITR0	0	0
		W								
0x02F4	VREGAPIRH	R	APIR15	APIR14	APIR13	APIR12	APIR11	APIR10	APIR9	APIR8
		W								
0x02F5	VREGAPIRL	R	APIR7	APIR6	APIR5	APIR4	APIR3	APIR2	APIR1	APIR0
		W								
0x02F6	Reserved 06	R	0	0	0	0	0	0	0	0
		W								
0x02F7	VREGHTTR	R	HTOEN	0	0	0	HTTR3	HTTR2	HTTR1	HTTR0
		W								

Table 17-3. Register Summary

17.3.2 Register Descriptions

This section describes all the VREG_3V3 registers and their individual bits.

17.3.2.1 High Temperature Control Register (VREGHTCL)

The VREGHTCL register allows to configure the VREG temperature sense features.

0x02F0

	7	6	5	4	3	2	1	0
R	0	0	VSEL	VAE	HTEN	HTDS	HTIE	HTIF
W								
Reset	0	0	0	1	0	0	0	0

= Unimplemented or Reserved

Table 17-4. VREGHTCL Field Descriptions

Field	Description
7, 6 Reserved	These reserved bits are used for test purposes and writable only in special modes. They must remain clear for correct temperature sensor operation.
5 VSEL	**Voltage Access Select Bit** — If set, the bandgap reference voltage V_{BG} can be accessed internally (i.e. multiplexed to an internal Analog to Digital Converter channel). The internal access must be enabled by bit VAE. See device level specification for connectivity. 0 An internal temperature proportional voltage V_{HT} can be accessed internally if VAE is set. 1 Bandgap reference voltage V_{BG} can be accessed internally if VAE is set.
4 VAE	**Voltage Access Enable Bit** — If set, the voltage selected by bit VSEL can be accessed internally (i.e. multiplexed to an internal Analog to Digital Converter channel). See device level specification for connectivity. 0 Voltage selected by VSEL can not be accessed internally (i.e. External analog input is connected to Analog to Digital Converter channel). 1 Voltage selected by VSEL can be accessed internally.
3 HTEN	**High Temperature Enable Bit** — If set the temperature sense is enabled. 0 The temperature sense is disabled. 1 The temperature sense is enabled.
2 HTDS	**High Temperature Detect Status Bit** — This read-only status bit reflects the temperature status. Writes have no effect. 0 Temperature T_{DIE} is below level T_{HTID} or RPM or Shutdown Mode. 1 Temperature T_{DIE} is above level T_{HTIA} and FPM.
1 HTIE	**High Temperature Interrupt Enable Bit** 0 Interrupt request is disabled. 1 Interrupt will be requested whenever HTIF is set.
0 HTIF	**High Temperature Interrupt Flag** — HTIF — High Temperature Interrupt Flag HTIF is set to 1 when HTDS status bit changes. This flag can only be cleared by writing a 1.}Writing a 0 has no effect. If enabled (HTIE=1), HTIF causes an interrupt request. 0 No change in HTDS bit. 1 HTDS bit has changed. **Note:** On entering the reduced power mode the HTIF is not cleared by the VREG.

17.3.2.2 Control Register (VREGCTRL)

The VREGCTRL register allows the configuration of the VREG_3V3 low-voltage detect features.

0x02F1

	7	6	5	4	3	2	1	0
R	0	0	0	0	0	LVDS	LVIE	LVIF
W								
Reset	0	0	0	0	0	0	0	0

= Unimplemented or Reserved

Figure 17-2. Control Register (VREGCTRL)

Table 17-5. VREGCTRL Field Descriptions

Field	Description
2 LVDS	**Low-Voltage Detect Status Bit** — This read-only status bit reflects the input voltage. Writes have no effect. 0 Input voltage V_{DDA} is above level V_{LVID} or RPM or shutdown mode. 1 Input voltage V_{DDA} is below level V_{LVIA} and FPM.
1 LVIE	**Low-Voltage Interrupt Enable Bit** 0 Interrupt request is disabled. 1 Interrupt will be requested whenever LVIF is set.
0 LVIF	**Low-Voltage Interrupt Flag** — LVIF is set to 1 when LVDS status bit changes. This flag can only be cleared by writing a 1. Writing a 0 has no effect. If enabled (LVIE = 1), LVIF causes an interrupt request. 0 No change in LVDS bit. 1 LVDS bit has changed. **Note:** On entering the Reduced Power Mode the LVIF is not cleared by the VREG_3V3.

17.3.2.3 Autonomous Periodical Interrupt Control Register (VREGAPICL)

The VREGAPICL register allows the configuration of the VREG_3V3 autonomous periodical interrupt features.

0x02F2

	7	6	5	4	3	2	1	0
R	APICLK	0	0	APIES	APIEA	APIFE	APIE	APIF
W								
Reset	0	0	0	0	0	0	0	0

= Unimplemented or Reserved

Figure 17-3. Autonomous Periodical Interrupt Control Register (VREGAPICL)

Table 17-6. VREGAPICL Field Descriptions

Field	Description
7 APICLK	**Autonomous Periodical Interrupt Clock Select Bit** — Selects the clock source for the API. Writable only if APIFE = 0; APICLK cannot be changed if APIFE is set by the same write operation. 0 Autonomous periodical interrupt clock used as source. 1 Bus clock used as source.
4 APIES	**Autonomous Periodical Interrupt External Select Bit** — Selects the waveform at the external pin.If set, at the external pin a clock is visible with 2 times the selected API Period (Table 17-10). If not set, at the external pin will be a high pulse at the end of every selected period with the size of half of the min period (Table 17-10). See device level specification for connectivity. 0 At the external periodic high pulses are visible, if APIEA and APIFE is set. 1 At the external pin a clock is visible, if APIEA and APIFE is set.
3 APIEA	**Autonomous Periodical Interrupt External Access Enable Bit** — If set, the waveform selected by bit APIES can be accessed externally. See device level specification for connectivity. 0 Waveform selected by APIES can not be accessed externally. 1 Waveform selected by APIES can be accessed externally, if APIFE is set.
2 APIFE	**Autonomous Periodical Interrupt Feature Enable Bit** — Enables the API feature and starts the API timer when set. 0 Autonomous periodical interrupt is disabled. 1 Autonomous periodical interrupt is enabled and timer starts running.
1 APIE	**Autonomous Periodical Interrupt Enable Bit** 0 API interrupt request is disabled. 1 API interrupt will be requested whenever APIF is set.
0 APIF	**Autonomous Periodical Interrupt Flag** — APIF is set to 1 when the in the API configured time has elapsed. This flag can only be cleared by writing a 1 to it. Clearing of the flag has precedence over setting. Writing a 0 has no effect. If enabled (APIE = 1), APIF causes an interrupt request. 0 API timeout has not yet occurred. 1 API timeout has occurred.

17.3.2.4 Autonomous Periodical Interrupt Trimming Register (VREGAPITR)

The VREGAPITR register allows to trim the API timeout period.

0x02F3

	7	6	5	4	3	2	1	0
R	APITR5	APITR4	APITR3	APITR2	APITR1	APITR0	0	0
W								
Reset	0[1]	0[1]	0[1]	0[1]	0[1]	0[1]	0	0

1. Reset value is either 0 or preset by factory. See Section 1 (Device Overview) for details.

= Unimplemented or Reserved

Figure 17-4. Autonomous Periodical Interrupt Trimming Register (VREGAPITR)

Table 17-7. VREGAPITR Field Descriptions

Field	Description
7–2 APITR[5:0]	**Autonomous Periodical Interrupt Period Trimming Bits** — See Table 17-8 for trimming effects.

Table 17-8. Trimming Effect of APIT

Bit	Trimming Effect
APITR[5]	Increases period
APITR[4]	Decreases period less than APITR[5] increased it
APITR[3]	Decreases period less than APITR[4]
APITR[2]	Decreases period less than APITR[3]
APITR[1]	Decreases period less than APITR[2]
APITR[0]	Decreases period less than APITR[1]

17.3.2.5 Autonomous Periodical Interrupt Rate High and Low Register (VREGAPIRH / VREGAPIRL)

The VREGAPIRH and VREGAPIRL register allows the configuration of the VREG_3V3 autonomous periodical interrupt rate.

0x02F4

	7	6	5	4	3	2	1	0
R W	APIR15	APIR14	APIR13	APIR12	APIR11	APIR10	APIR9	APIR8
Reset	0	0	0	0	0	0	0	0

= Unimplemented or Reserved

Figure 17-5. Autonomous Periodical Interrupt Rate High Register (VREGAPIRH)

0x02F5

	7	6	5	4	3	2	1	0
R W	APIR7	APIR6	APIR5	APIR4	APIR3	APIR2	APIR1	APIR0
Reset	0	0	0	0	0	0	0	0

Figure 17-6. Autonomous Periodical Interrupt Rate Low Register (VREGAPIRL)

Table 17-9. VREGAPIRH / VREGAPIRL Field Descriptions

Field	Description
15-0 APIR[15:0]	**Autonomous Periodical Interrupt Rate Bits** — These bits define the timeout period of the API. See Table 17-10 for details of the effect of the autonomous periodical interrupt rate bits. Writable only if APIFE = 0 of VREGAPICL register.

Table 17-10. Selectable Autonomous Periodical Interrupt Periods

APICLK	APIR[15:0]	Selected Period
0	0000	0.2 ms[1]
0	0001	0.4 ms[1]
0	0002	0.6 ms[1]
0	0003	0.8 ms[1]
0	0004	1.0 ms[1]
0	0005	1.2 ms[1]
0	.....	.....
0	FFFD	13106.8 ms[1]
0	FFFE	13107.0 ms[1]
0	FFFF	13107.2 ms[1]
1	0000	2 * bus clock period
1	0001	4 * bus clock period
1	0002	6 * bus clock period
1	0003	8 * bus clock period
1	0004	10 * bus clock period
1	0005	12 * bus clock period
1	.....	.....
1	FFFD	131068 * bus clock period
1	FFFE	131070 * bus clock period
1	FFFF	131072 * bus clock period

1 When trimmed within specified accuracy. See electrical specifications for details.

The period can be calculated as follows depending of APICLK:

Period = 2*(APIR[15:0] + 1) * 0.1 ms or period = 2*(APIR[15:0] + 1) * bus clock period

17.3.2.6 Reserved 06

The Reserved 06 is reserved for test purposes.

0x02F6

	7	6	5	4	3	2	1	0
R	0	0	0	0	0	0	0	0
W								
Reset	0	0	0	0	0	0	0	0

= Unimplemented or Reserved

Figure 17-7. Reserved 06

17.3.2.7 High Temperature Trimming Register (VREGHTTR)

The VREGHTTR register allows to trim the VREG temperature sense.

0x02F7

	7	6	5	4	3	2	1	0
R	HTOEN	0	0	0	HTTR3	HTTR2	HTTR1	HTTR0
W								
Reset	0	0	0	0	0[1]	0[1]	0[1]	0[1]

1. Reset value is either 0 or preset by factory. See Section 1 (Device Overview) for details.

= Unimplemented or Reserved

Figure 17-8. VREGHTTR

Table 17-11. VREGHTTR field descriptions

Field	Description
7 HTOEN	**High Temperature Offset Enable Bit** — If set the temperature sense offset is enabled 0 The temperature sense offset is disabled 1 The temperature sense offset is enabled
3–0 HTTR[3:0]	**High Temperature Trimming Bits** — See Table 23-16 for trimming effects.

Table 17-12. Trimming Effect

Bit	Trimming Effect
HTTR[3]	Increases V_{HT} twice of HTTR[2]
HTTR[2]	Increases V_{HT} twice of HTTR[1]
HTTR[1]	Increases V_{HT} twice of HTTR[0]
HTTR[0]	Increases V_{HT} (to compensate Temperature Offset)

17.4 Functional Description

17.4.1 General

Module VREG_3V3 is a voltage regulator, as depicted in Figure 17-1. The regulator functional elements are the regulator core (REG), a low-voltage detect module (LVD), a control block (CTRL), a power-on reset module (POR), and a low-voltage reset module (LVR)and a high temperature sensor (HTD).

17.4.2 Regulator Core (REG)

Respectively its regulator core has three parallel, independent regulation loops (REG1,REG2 and REG3). REG1 and REG3 differ only in the amount of current that can be delivered.

The regulators are linear regulator with a bandgap reference when operated in Full Performance Mode. They act as a voltage clamp in Reduced Power Mode. All load currents flow from input VDDR to VSS or VSSPLL. The reference circuits are supplied by VDDA and VSSA.

17.4.2.1 Full Performance Mode

In Full Performance Mode, the output voltage is compared with a reference voltage by an operational amplifier. The amplified input voltage difference drives the gate of an output transistor.

17.4.2.2 Reduced Power Mode

In Reduced Power Mode, the gate of the output transistor is connected directly to a reference voltage to reduce power consumption. Mode switching from reduced power to full performance requires a transition time of t_{vup}, if the voltage regulator is enabled.

17.4.3 Low-Voltage Detect (LVD)

Subblock LVD is responsible for generating the low-voltage interrupt (LVI). LVD monitors the input voltage (V_{DDA}–V_{SSA}) and continuously updates the status flag LVDS. Interrupt flag LVIF is set whenever status flag LVDS changes its value. The LVD is available in FPM and is inactive in Reduced Power Mode or Shutdown Mode.

17.4.4 Power-On Reset (POR)

This functional block monitors VDD. If V_{DD} is below V_{PORD}, POR is asserted; if V_{DD} exceeds V_{PORD}, the POR is deasserted. POR asserted forces the MCU into Reset. POR Deasserted will trigger the power-on sequence.

17.4.5 Low-Voltage Reset (LVR)

Block LVR monitors the supplies VDD, VDDX and VDDF. If one (or more) drops below it’s corresponding assertion level, signal LVR asserts; if all VDD,VDDX and VDDF supplies are above their

corresponding deassertion levels, signal LVR deasserts. The LVR function is available only in Full Performance Mode.

17.4.6 HTD - High Temperature Detect

Subblock HTD is responsible for generating the high temperature interrupt (HTI). HTD monitors the die temperature T_{DIE} and continuously updates the status flag HTDS.
Interrupt flag HTIF is set whenever status flag HTDS changes its value.

The HTD is available in FPM and is inactive in Reduced Power Mode and Shutdown Mode.

The HT Trimming bits HTTR[3:0] can be set so that the temperature offset is zero, if accurate temperature measurement is desired.

See Table 23-16 for the trimming effect of APITR.

17.4.7 Regulator Control (CTRL)

This part contains the register block of VREG_3V3 and further digital functionality needed to control the operating modes. CTRL also represents the interface to the digital core logic.

17.4.8 Autonomous Periodical Interrupt (API)

Subblock API can generate periodical interrupts independent of the clock source of the MCU. To enable the timer, the bit APIFE needs to be set.

The API timer is either clocked by a trimmable internal RC oscillator or the bus clock. Timer operation will freeze when MCU clock source is selected and bus clock is turned off. See CRG specification for details. The clock source can be selected with bit APICLK. APICLK can only be written when APIFE is not set.

The APIR[15:0] bits determine the interrupt period. APIR[15:0] can only be written when APIFE is cleared. As soon as APIFE is set, the timer starts running for the period selected by APIR[15:0] bits. When the configured time has elapsed, the flag APIF is set. An interrupt, indicated by flag APIF = 1, is triggered if interrupt enable bit APIE = 1. The timer is started automatically again after it has set APIF.

The procedure to change APICLK or APIR[15:0] is first to clear APIFE, then write to APICLK or APIR[15:0], and afterwards set APIFE.

The API Trimming bits APITR[5:0] must be set so the minimum period equals 0.2 ms if stable frequency is desired.

See Table 17-8 for the trimming effect of APITR.

NOTE

The first period after enabling the counter by APIFE might be reduced by API start up delay t_{sdel}. The API internal RC oscillator clock is not available if VREG_3V3 is in Shutdown Mode.

It is possible to generate with the API a waveform at an external pin by enabling the API by setting APIFE and enabling the external access with setting APIEA. By setting APIES the waveform can be selected. If APIES is set, then at the external pin a clock is visible with 2 times the selected API Period (Table 17-10). If APIES is not set, then at the external pin will be a high pulse at the end of every selected period with the size of half of the min period (Table 17-10). See device level specification for connectivity.

17.4.9 Resets

This section describes how VREG_3V3 controls the reset of the MCU.The reset values of registers and signals are provided in Section 17.3, “Memory Map and Register Definition”. Possible reset sources are listed in Table 17-13.

Table 17-13. Reset Sources

Reset Source	Local Enable
Power-on reset	Always active
Low-voltage reset	Available only in Full Performance Mode

17.4.10 Description of Reset Operation

17.4.10.1 Power-On Reset (POR)

During chip power-up the digital core may not work if its supply voltage V_{DD} is below the POR deassertion level (V_{PORD}). Therefore, signal POR, which forces the other blocks of the device into reset, is kept high until V_{DD} exceeds V_{PORD}. The MCU will run the start-up sequence after POR deassertion. The power-on reset is active in all operation modes of VREG_3V3.

17.4.10.2 Low-Voltage Reset (LVR)

For details on low-voltage reset, see Section 17.4.5, “Low-Voltage Reset (LVR)”.

17.4.11 Interrupts

This section describes all interrupts originated by VREG_3V3.

The interrupt vectors requested by VREG_3V3 are listed in Table 17-14. Vector addresses and interrupt priorities are defined at MCU level.

Table 17-14. Interrupt Vectors

Interrupt Source	Local Enable
Low-voltage interrupt (LVI)	LVIE = 1; available only in Full Performance Mode
High Temperature Interrupt (HTI)	HTIE=1; available only in Full Performance Mode
Autonomous periodical interrupt (API)	APIE = 1

17.4.11.1 Low-Voltage Interrupt (LVI)

In FPM, VREG_3V3 monitors the input voltage V_{DDA}. Whenever V_{DDA} drops below level $V_{LVIA,}$ the status bit LVDS is set to 1. On the other hand, LVDS is reset to 0 when V_{DDA} rises above level V_{LVID}. An interrupt, indicated by flag LVIF = 1, is triggered by any change of the status bit LVDS if interrupt enable bit LVIE = 1.

NOTE

On entering the Reduced Power Mode, the LVIF is not cleared by the VREG_3V3.

17.4.11.2 HTI - High Temperature Interrupt

In FPM VREG monitors the die temperature T_{DIE}. Whenever T_{DIE} exceeds level T_{HTIA} the status bit HTDS is set to 1. Vice versa, HTDS is reset to 0 when T_{DIE} get below level T_{HTID}. An interrupt, indicated by flag HTIF=1, is triggered by any change of the status bit HTDS if interrupt enable bit HTIE=1.

NOTE

On entering the Reduced Power Mode the HTIF is not cleared by the VREG.

17.4.11.3 Autonomous Periodical Interrupt (API)

As soon as the configured timeout period of the API has elapsed, the APIF bit is set. An interrupt, indicated by flag APIF = 1, is triggered if interrupt enable bit APIE = 1.

Chapter 18
256 KByte Flash Module (S12XFTMR256K1V1)

Table 18-1. Revision History

Revision Number	Revision Date	Sections Affected	Description of Changes
V01.04	03 Jan 2008		- Cosmetic changes
V01.05	19 Dec 2008	18.1/18-507 18.4.2.4/18-542 18.4.2.6/18-544 18.4.2.11/18-547 18.4.2.11/18-547 18.4.2.11/18-547	- Clarify single bit fault correction for P-Flash phrase - Add statement concerning code runaway when executing Read Once, Program Once, and Verify Backdoor Access Key commands from Flash block containing associated fields - Relate Key 0 to associated Backdoor Comparison Key address - Change “power down reset” to “reset” in Section 18.4.2.11
V01.06	25 Sep 2009	18.3.2/18-514 18.3.2.1/18-516 18.4.1.2/18-536 18.6/18-556	The following changes were made to clarify module behavior related to Flash register access during reset sequence and while Flash commands are active: - Add caution concerning register writes while command is active - Writes to FCLKDIV are allowed during reset sequence while CCIF is clear - Add caution concerning register writes while command is active - Writes to FCCOBIX, FCCOBHI, FCCOBLO registers are ignored during reset sequence

18.1 Introduction

The FTMR256K1 module implements the following:

- 256 Kbytes of P-Flash (Program Flash) memory
- 8 Kbytes of D-Flash (Data Flash) memory

The Flash memory is ideal for single-supply applications allowing for field reprogramming without requiring external high voltage sources for program or erase operations. The Flash module includes a memory controller that executes commands to modify Flash memory contents. The user interface to the memory controller consists of the indexed Flash Common Command Object (FCCOB) register which is written to with the command, global address, data, and any required command parameters. The memory controller must complete the execution of a command before the FCCOB register can be written to with a new command.

CAUTION

A Flash word or phrase must be in the erased state before being programmed. Cumulative programming of bits within a Flash word or phrase is not allowed.

The Flash memory may be read as bytes, aligned words, or misaligned words. Read access time is one bus cycle for bytes and aligned words, and two bus cycles for misaligned words. For Flash memory, an erased bit reads 1 and a programmed bit reads 0.

It is not possible to read from a Flash block while any command is executing on that specific Flash block. It is possible to read from a Flash block while a command is executing on a different Flash block.

Both P-Flash and D-Flash memories are implemented with Error Correction Codes (ECC) that can resolve single bit faults and detect double bit faults. For P-Flash memory, the ECC implementation requires that programming be done on an aligned 8 byte basis (a Flash phrase). Since P-Flash memory is always read by phrase, only one single bit fault in the phrase containing the byte or word accessed will be corrected.

18.1.1 Glossary

Command Write Sequence — An MCU instruction sequence to execute built-in algorithms (including program and erase) on the Flash memory.

D-Flash Memory — The D-Flash memory constitutes the nonvolatile memory store for data.

D-Flash Sector — The D-Flash sector is the smallest portion of the D-Flash memory that can be erased. The D-Flash sector consists of four 64 byte rows for a total of 256 bytes.

NVM Command Mode — An NVM mode using the CPU to setup the FCCOB register to pass parameters required for Flash command execution.

Phrase — An aligned group of four 16-bit words within the P-Flash memory. Each phrase includes eight ECC bits for single bit fault correction and double bit fault detection within the phrase.

P-Flash Memory — The P-Flash memory constitutes the main nonvolatile memory store for applications.

P-Flash Sector — The P-Flash sector is the smallest portion of the P-Flash memory that can be erased. Each P-Flash sector contains 1024 bytes.

Program IFR — Nonvolatile information register located in the P-Flash block that contains the Device ID, Version ID, and the Program Once field. The Program IFR is visible in the global memory map by setting the PGMIFRON bit in the MMCCTL1 register.

18.1.2 Features

18.1.2.1 P-Flash Features

- 256 Kbytes of P-Flash memory composed of one 256 Kbyte Flash block divided into 256 sectors of 1024 bytes
- Single bit fault correction and double bit fault detection within a 64-bit phrase during read operations

- Automated program and erase algorithm with verify and generation of ECC parity bits
- Fast sector erase and phrase program operation
- Flexible protection scheme to prevent accidental program or erase of P-Flash memory

18.1.2.2 D-Flash Features

- 8 Kbytes of D-Flash memory composed of one 8 Kbyte Flash block divided into 32 sectors of 256 bytes
- Single bit fault correction and double bit fault detection within a word during read operations
- Automated program and erase algorithm with verify and generation of ECC parity bits
- Fast sector erase and word program operation
- Protection scheme to prevent accidental program or erase of D-Flash memory
- Ability to program up to four words in a burst sequence

18.1.2.3 Other Flash Module Features

- No external high-voltage power supply required for Flash memory program and erase operations
- Interrupt generation on Flash command completion and Flash error detection
- Security mechanism to prevent unauthorized access to the Flash memory

18.1.3 Block Diagram

The block diagram of the Flash module is shown in Figure 18-1.

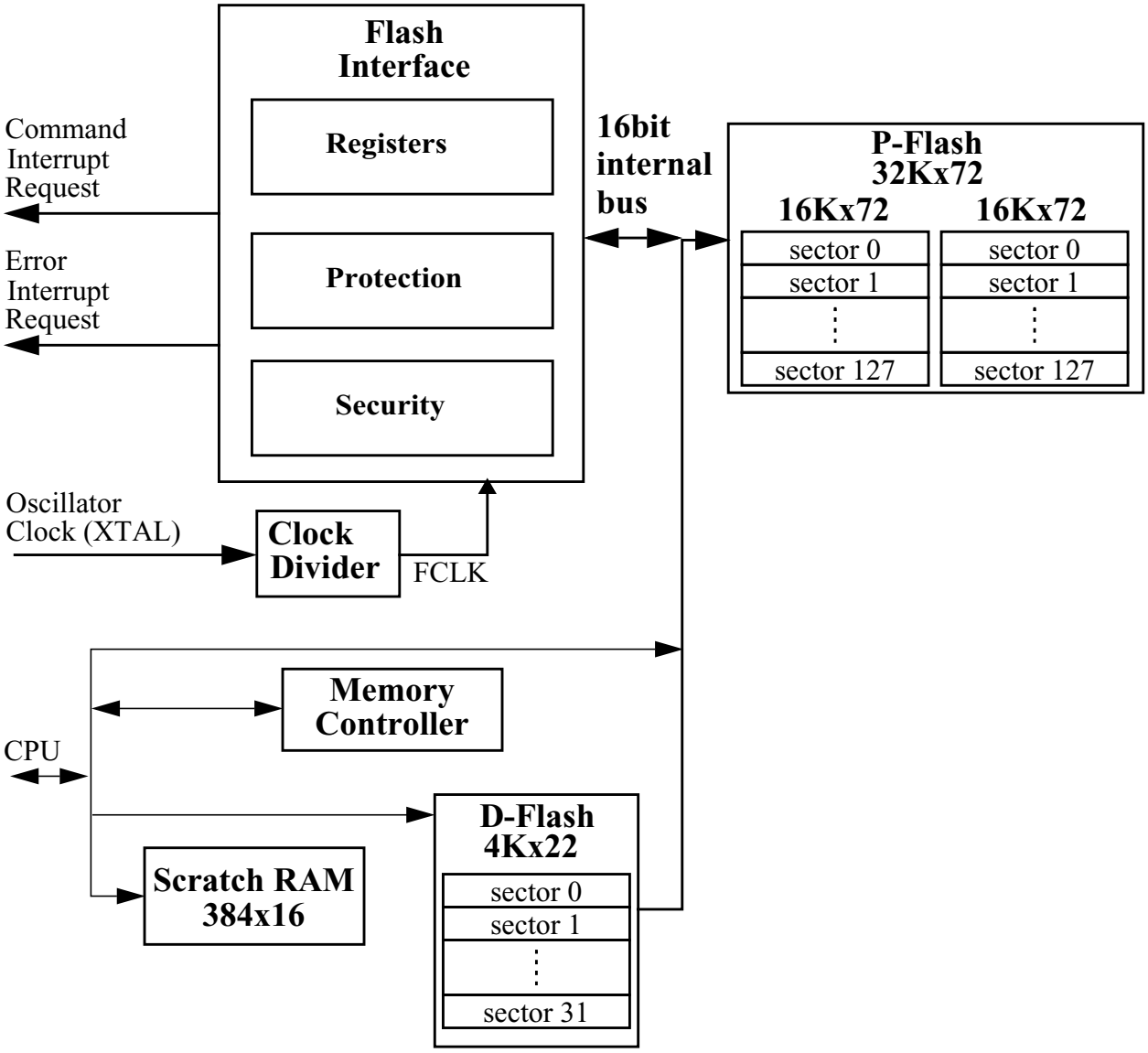

Figure 18-1. FTMR256K1 Block Diagram

18.2 External Signal Description

The Flash module contains no signals that connect off-chip.

18.3 Memory Map and Registers

This section describes the memory map and registers for the Flash module. Read data from unimplemented memory space in the Flash module is undefined. Write access to unimplemented or reserved memory space in the Flash module will be ignored by the Flash module.

18.3.1 Module Memory Map

The S12X architecture places the P-Flash memory between global addresses 0x7C_0000 and 0x7F_FFFF as shown in Table 18-2. The P-Flash memory map is shown in Figure 18-2.

Table 18-2. P-Flash Memory Addressing

Global Address	Size (Bytes)	Description
0x7C_0000 – 0x7F_FFFF	256 K	P-Flash Block 0 Contains Flash Configuration Field (see Table 18-3)

The FPROT register, described in Section 18.3.2.9, can be set to protect regions in the Flash memory from accidental program or erase. Three separate memory regions, one growing upward from global address 0x7F_8000 in the Flash memory (called the lower region), one growing downward from global address 0x7F_FFFF in the Flash memory (called the higher region), and the remaining addresses in the Flash memory, can be activated for protection. The Flash memory addresses covered by these protectable regions are shown in the P-Flash memory map. The higher address region is mainly targeted to hold the boot loader code since it covers the vector space. Default protection settings as well as security information that allows the MCU to restrict access to the Flash module are stored in the Flash configuration field as described in Table 18-3.

Table 18-3. Flash Configuration Field[1]

Global Address	Size (Bytes)	Description
0x7F_FF00 – 0x7F_FF07	8	Backdoor Comparison Key Refer to Section 18.4.2.11, “Verify Backdoor Access Key Command,” and Section 18.5.1, “Unsecuring the MCU using Backdoor Key Access”
0x7F_FF08 – 0x7F_FF0B[2]	4	Reserved
0x7F_FF0C[2]	1	P-Flash Protection byte. Refer to Section 18.3.2.9, “P-Flash Protection Register (FPROT)”
0x7F_FF0D[2]	1	D-Flash Protection byte. Refer to Section 18.3.2.10, “D-Flash Protection Register (DFPROT)”
0x7F_FF0E[2]	1	Flash Nonvolatile byte Refer to Section 18.3.2.15, “Flash Option Register (FOPT)”
0x7F_FF0F[2]	1	Flash Security byte Refer to Section 18.3.2.2, “Flash Security Register (FSEC)”

[1] Older versions may have swapped protection byte addresses

[2] 0x7FF08 - 0x7F_FF0F form a Flash phrase and must be programmed in a single command write sequence. Each byte in the 0x7F_FF08 - 0x7F_FF0B reserved field should be programmed to 0xFF.

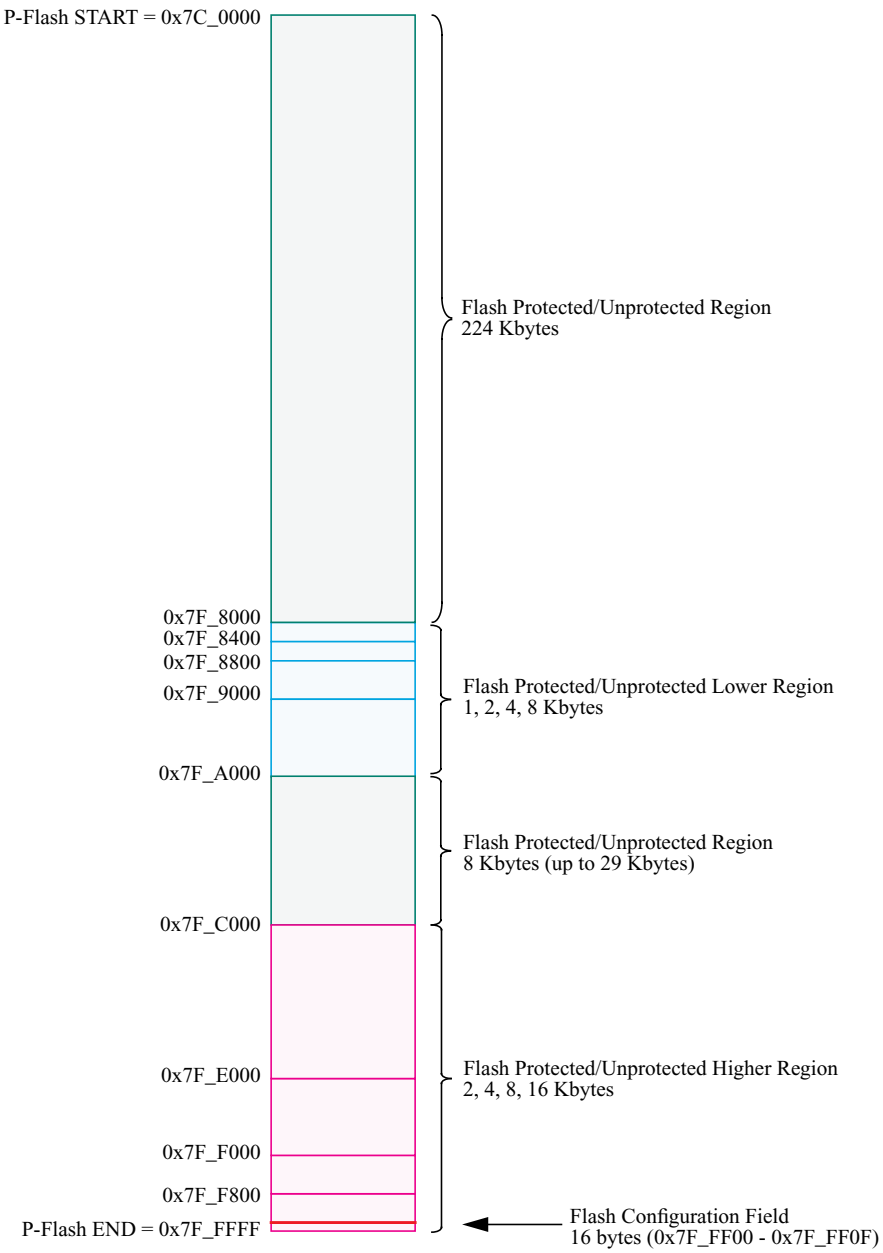

Figure 18-2. P-Flash Memory Map

Table 18-4. Program IFR Fields

Global Address (PGMIFRON)	Size (Bytes)	Field Description
0x40_0000 – 0x40_0007	8	Device ID
0x40_0008 – 0x40_00E7	224	Reserved
0x40_00E8 – 0x40_00E9	2	Version ID
0x40_00EA – 0x40_00FF	22	Reserved
0x40_0100 – 0x40_013F	64	Program Once Field Refer to Section 18.4.2.6, “Program Once Command”
0x40_0140 – 0x40_01FF	192	Reserved

Table 18-5. D-Flash and Memory Controller Resource Fields

Global Address	Size (Bytes)	Description
0x10_0000 – 0x10_1FFF	8,192	D-Flash Memory
0x10_2000 – 0x11_FFFF	122,880	Reserved
0x12_0000 – 0x12_007F	128	D-Flash Nonvolatile Information Register (DFIFRON[1] = 1)
0x12_0080 – 0x12_0FFF	3,968	Reserved
0x12_1000 – 0x12_1FFF	4,096	Reserved
0x12_2000 – 0x12_3CFF	7,242	Reserved
0x12_3D00 – 0x12_3FFF	768	Memory Controller Scratch RAM (MGRAMON[1] = 1)
0x12_4000 – 0x12_E7FF	43,008	Reserved
0x12_E800 – 0x12_FFFF	6,144	Reserved
0x13_0000 – 0x13_FFFF	65,536	Reserved

[1] MMCCTL1 register bit

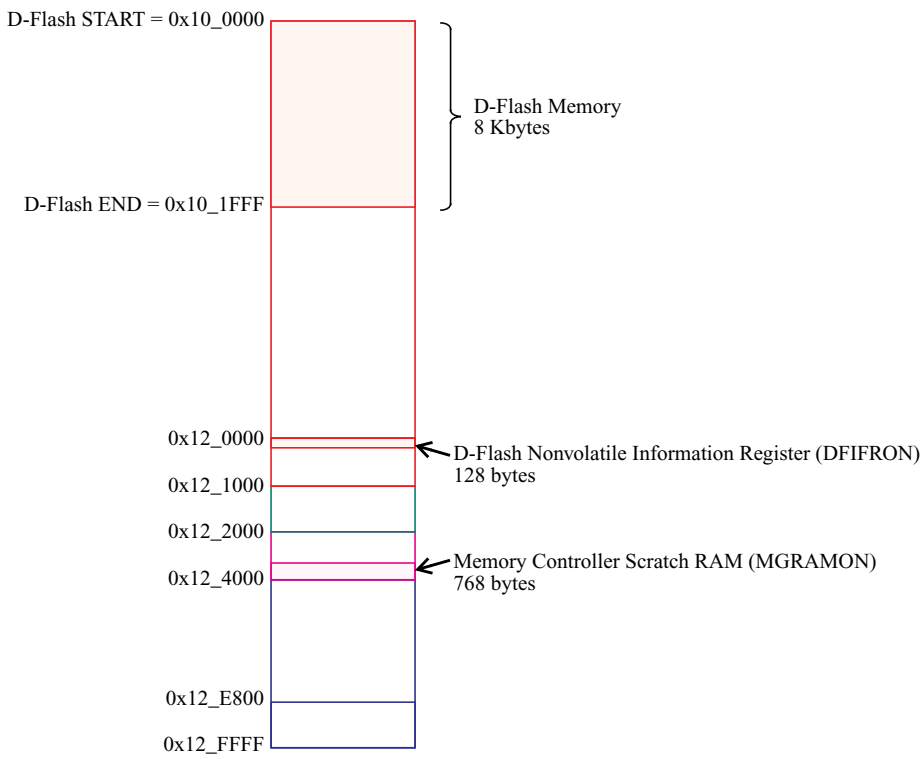

Figure 18-3. D-Flash and Memory Controller Resource Memory Map

18.3.2 Register Descriptions

The Flash module contains a set of 20 control and status registers located between Flash module base + 0x0000 and 0x0013. A summary of the Flash module registers is given in Figure 18-4 with detailed descriptions in the following subsections.

CAUTION

Writes to any Flash register must be avoided while a Flash command is active (CCIF=0) to prevent corruption of Flash register contents and Memory Controller behavior.

Address & Name		7	6	5	4	3	2	1	0
0x0000 FCLKDIV	R	FDIVLD	FDIV6	FDIV5	FDIV4	FDIV3	FDIV2	FDIV1	FDIV0
	W								
0x0001 FSEC	R	KEYEN1	KEYEN0	RNV5	RNV4	RNV3	RNV2	SEC1	SEC0
	W								

Figure 18-4. FTMR256K1 Register Summary

Address & Name		7	6	5	4	3	2	1	0
0x0002 FCCOBIX	R	0	0	0	0	0	CCOBIX2	CCOBIX1	CCOBIX0
	W								
0x0003 FECCRIX	R	0	0	0	0	0	ECCRIX2	ECCRIX1	ECCRIX0
	W								
0x0004 FCNFG	R	CCIE	0	0	IGNSF	0	0	FDFD	FSFD
	W								
0x0005 FERCNFG	R			0				DFDIE	SFDIE
	W								
0x0006 FSTAT	R	CCIF	0	ACCERR	FPVIOL	MGBUSY	RSVD	MGSTAT1	MGSTAT0
	W								
0x0007 FERSTAT	R	0	0	0	0	0	0	DFDIF	SFDIF
	W								
0x0008 FPROT	R	FPOPEN	RNV6	FPHDIS	FPHS1	FPHS0	FPLDIS	FPLS1	FPLS0
	W								
0x0009 DFPROT	R	DPOPEN	0	0	DPS4	DPS3	DPS2	DPS1	DPS0
	W								
0x000A FCCOBHI	R	CCOB15	CCOB14	CCOB13	CCOB12	CCOB11	CCOB10	CCOB9	CCOB8
	W								
0x000B FCCOBLO	R	CCOB7	CCOB6	CCOB5	CCOB4	CCOB3	CCOB2	CCOB1	CCOB0
	W								
0x000C FRSV0	R	0	0	0	0	0	0	0	0
	W								
0x000D FRSV1	R	0	0	0	0	0	0	0	0
	W								
0x000E FECCRHI	R	ECCR15	ECCR14	ECCR13	ECCR12	ECCR11	ECCR10	ECCR9	ECCR8
	W								
0x000F FECCRLO	R	ECCR7	ECCR6	ECCR5	ECCR4	ECCR3	ECCR2	ECCR1	ECCR0
	W								

Figure 18-4. FTMR256K1 Register Summary (continued)

Address & Name		7	6	5	4	3	2	1	0
0x0010 FOPT	R	NV7	NV6	NV5	NV4	NV3	NV2	NV1	NV0
	W								
0x0011 FRSV2	R	0	0	0	0	0	0	0	0
	W								
0x0012 FRSV3	R	0	0	0	0	0	0	0	0
	W								
0x0013 FRSV4	R	0	0	0	0	0	0	0	0
	W								

= Unimplemented or Reserved

Figure 18-4. FTMR256K1 Register Summary (continued)

18.3.2.1 Flash Clock Divider Register (FCLKDIV)

The FCLKDIV register is used to control timed events in program and erase algorithms.

Offset Module Base + 0x0000

	7	6	5	4	3	2	1	0
R	FDIVLD	FDIV[6:0]						
W								
Reset	0	0	0	0	0	0	0	0

= Unimplemented or Reserved

Figure 18-5. Flash Clock Divider Register (FCLKDIV)

All bits in the FCLKDIV register are readable, bits 6–0 are write once and bit 7 is not writable.

Table 18-6. FCLKDIV Field Descriptions

Field	Description
7 FDIVLD	**Clock Divider Loaded** 0 FCLKDIV register has not been written 1 FCLKDIV register has been written since the last reset
6–0 FDIV[6:0]	**Clock Divider Bits** — FDIV[6:0] must be set to effectively divide OSCCLK down to generate an internal Flash clock, FCLK, with a target frequency of 1 MHz for use by the Flash module to control timed events during program and erase algorithms. Table 18-7 shows recommended values for FDIV[6:0] based on OSCCLK frequency. Please refer to Section 18.4.1, “Flash Command Operations,” for more information.

CAUTION

The FCLKDIV register should never be written while a Flash command is executing (CCIF=0). The FCLKDIV register is writable during the Flash reset sequence even though CCIF is clear.

Table 18-7. FDIV vs OSCCLK Frequency

OSCCLK Frequency (MHz)		FDIV[6:0]	OSCCLK Frequency (MHz)		FDIV[6:0]
MIN[1]	MAX[2]		MIN[1]	MAX[2]	
1.60	2.10	0x01	33.60	34.65	0x20
2.40	3.15	0x02	34.65	35.70	0x21
3.20	4.20	0x03	35.70	36.75	0x22
4.20	5.25	0x04	36.75	37.80	0x23
5.25	6.30	0x05	37.80	38.85	0x24
6.30	7.35	0x06	38.85	39.90	0x25
7.35	8.40	0x07	39.90	40.95	0x26
8.40	9.45	0x08	40.95	42.00	0x27
9.45	10.50	0x09	42.00	43.05	0x28
10.50	11.55	0x0A	43.05	44.10	0x29
11.55	12.60	0x0B	44.10	45.15	0x2A
12.60	13.65	0x0C	45.15	46.20	0x2B
13.65	14.70	0x0D	46.20	47.25	0x2C
14.70	15.75	0x0E	47.25	48.30	0x2D
15.75	16.80	0x0F	48.30	49.35	0x2E
16.80	17.85	0x10	49.35	50.40	0x2F
17.85	18.90	0x11			
18.90	19.95	0x12			
19.95	21.00	0x13			
21.00	22.05	0x14			
22.05	23.10	0x15			
23.10	24.15	0x16			
24.15	25.20	0x17			
25.20	26.25	0x18			
26.25	27.30	0x19			
27.30	28.35	0x1A			
28.35	29.40	0x1B			
29.40	30.45	0x1C			
30.45	31.50	0x1D			
31.50	32.55	0x1E			
32.55	33.60	0x1F			

[1] FDIV shown generates an FCLK frequency of >0.8 MHz

[2] FDIV shown generates an FCLK frequency of 1.05 MHz

18.3.2.2 Flash Security Register (FSEC)

The FSEC register holds all bits associated with the security of the MCU and Flash module.

Offset Module Base + 0x0001

	7	6	5	4	3	2	1	0
R	KEYEN[1:0]		RNV[5:2]				SEC[1:0]	
W								
Reset	F	F	F	F	F	F	F	F

= Unimplemented or Reserved

Figure 18-6. Flash Security Register (FSEC)

All bits in the FSEC register are readable but not writable.

During the reset sequence, the FSEC register is loaded with the contents of the Flash security byte in the Flash configuration field at global address 0x7F_FF0F located in P-Flash memory (see Table 18-3) as indicated by reset condition F in Figure 18-6. If a double bit fault is detected while reading the P-Flash phrase containing the Flash security byte during the reset sequence, all bits in the FSEC register will be set to leave the Flash module in a secured state with backdoor key access disabled.

Table 18-8. FSEC Field Descriptions

Field	Description
7–6 KEYEN[1:0]	**Backdoor Key Security Enable Bits** — The KEYEN[1:0] bits define the enabling of backdoor key access to the Flash module as shown in Table 18-9.
5–2 RNV[5:2}	**Reserved Nonvolatile Bits** — The RNV bits should remain in the erased state for future enhancements.
1–0 SEC[1:0]	**Flash Security Bits** — The SEC[1:0] bits define the security state of the MCU as shown in Table 18-10. If the Flash module is unsecured using backdoor key access, the SEC bits are forced to 10.

Table 18-9. Flash KEYEN States

KEYEN[1:0]	Status of Backdoor Key Access
00	DISABLED
01	DISABLED[1]
10	ENABLED
11	DISABLED

[1] Preferred KEYEN state to disable backdoor key access.

Table 18-10. Flash Security States

SEC[1:0]	Status of Security
00	SECURED
01	SECURED[1]
10	UNSECURED
11	SECURED

[1] Preferred SEC state to set MCU to secured state.

The security function in the Flash module is described in Section 18.5.

18.3.2.3 Flash CCOB Index Register (FCCOBIX)

The FCCOBIX register is used to index the FCCOB register for Flash memory operations.

Offset Module Base + 0x0002

	7	6	5	4	3	2	1	0
R	0	0	0	0	0	CCOBIX[2:0]		
W								
Reset	0	0	0	0	0	0	0	0

= Unimplemented or Reserved

Figure 18-7. FCCOB Index Register (FCCOBIX)

CCOBIX bits are readable and writable while remaining bits read 0 and are not writable.

Table 18-11. FCCOBIX Field Descriptions

Field	Description
2–0 CCOBIX[1:0]	**Common Command Register Index**— The CCOBIX bits are used to select which word of the FCCOB register array is being read or written to. See Section 18.3.2.11, "Flash Common Command Object Register (FCCOB)," for more details.

18.3.2.4 Flash ECCR Index Register (FECCRIX)

The FECCRIX register is used to index the FECCR register for ECC fault reporting.

Offset Module Base + 0x0003

	7	6	5	4	3	2	1	0
R	0	0	0	0	0	ECCRIX[2:0]		
W								
Reset	0	0	0	0	0	0	0	0

= Unimplemented or Reserved

Figure 18-8. FECCR Index Register (FECCRIX)

ECCRIX bits are readable and writable while remaining bits read 0 and are not writable.

Table 18-12. FECCRIX Field Descriptions

Field	Description
2-0 ECCRIX[2:0]	**ECC Error Register Index**— The ECCRIX bits are used to select which word of the FECCR register array is being read. See Section 18.3.2.14, "Flash ECC Error Results Register (FECCR)," for more details.

18.3.2.5 Flash Configuration Register (FCNFG)

The FCNFG register enables the Flash command complete interrupt and forces ECC faults on Flash array read access from the CPU or XGATE.

Offset Module Base + 0x0004

	7	6	5	4	3	2	1	0
R	CCIE	0	0	IGNSF	0	0	FDFD	FSFD
W								
Reset	0	0	0	0	0	0	0	0

= Unimplemented or Reserved

Figure 18-9. Flash Configuration Register (FCNFG)

CCIE, IGNSF, FDFD, and FSFD bits are readable and writable while remaining bits read 0 and are not writable.

Table 18-13. FCNFG Field Descriptions

Field	Description
7 CCIE	**Command Complete Interrupt Enable** — The CCIE bit controls interrupt generation when a Flash command has completed. 0 Command complete interrupt disabled 1 An interrupt will be requested whenever the CCIF flag in the FSTAT register is set (see Section 18.3.2.7)
4 IGNSF	**Ignore Single Bit Fault** — The IGNSF controls single bit fault reporting in the FERSTAT register (see Section 18.3.2.8). 0 All single bit faults detected during array reads are reported 1 Single bit faults detected during array reads are not reported and the single bit fault interrupt will not be generated
1 FDFD	**Force Double Bit Fault Detect** — The FDFD bit allows the user to simulate a double bit fault during Flash array read operations and check the associated interrupt routine. The FDFD bit is cleared by writing a 0 to FDFD. The FECCR registers will not be updated during the Flash array read operation with FDFD set unless an actual double bit fault is detected. 0 Flash array read operations will set the DFDIF flag in the FERSTAT register only if a double bit fault is detected 1 Any Flash array read operation will force the DFDIF flag in the FERSTAT register to be set (see Section 18.3.2.7) and an interrupt will be generated as long as the DFDIE interrupt enable in the FERCNFG register is set (see Section 18.3.2.6)
0 FSFD	**Force Single Bit Fault Detect** — The FSFD bit allows the user to simulate a single bit fault during Flash array read operations and check the associated interrupt routine. The FSFD bit is cleared by writing a 0 to FSFD. The FECCR registers will not be updated during the Flash array read operation with FSFD set unless an actual single bit fault is detected. 0 Flash array read operations will set the SFDIF flag in the FERSTAT register only if a single bit fault is detected 1 Flash array read operation will force the SFDIF flag in the FERSTAT register to be set (see Section 18.3.2.7) and an interrupt will be generated as long as the SFDIE interrupt enable in the FERCNFG register is set (see Section 18.3.2.6)

18.3.2.6 Flash Error Configuration Register (FERCNFG)

The FERCNFG register enables the Flash error interrupts for the FERSTAT flags.

Offset Module Base + 0x0005

	7	6	5	4	3	2	1	0
R			0				DFDIE	SFDIE
W								
Reset	0	0	0	0	0	0	0	0

= Unimplemented or Reserved

Figure 18-10. Flash Error Configuration Register (FERCNFG)

All assigned bits in the FERCNFG register are readable and writable.

Table 18-14. FERCNFG Field Descriptions

Field	Description
1 DFDIE	**Double Bit Fault Detect Interrupt Enable** — The DFDIE bit controls interrupt generation when a double bit fault is detected during a Flash block read operation. 0 DFDIF interrupt disabled 1 An interrupt will be requested whenever the DFDIF flag is set (see Section 18.3.2.8)
0 SFDIE	**Single Bit Fault Detect Interrupt Enable** — The SFDIE bit controls interrupt generation when a single bit fault is detected during a Flash block read operation. 0 SFDIF interrupt disabled whenever the SFDIF flag is set (see Section 18.3.2.8) 1 An interrupt will be requested whenever the SFDIF flag is set (see Section 18.3.2.8)

18.3.2.7 Flash Status Register (FSTAT)

The FSTAT register reports the operational status of the Flash module.

Offset Module Base + 0x0006

	7	6	5	4	3	2	1	0
R	CCIF	0	ACCERR	FPVIOL	MGBUSY	RSVD	MGSTAT[1:0]	
W								
Reset	1	0	0	0	0	0	0[1]	0[1]

= Unimplemented or Reserved

Figure 18-11. Flash Status Register (FSTAT)

[1] Reset value can deviate from the value shown if a double bit fault is detected during the reset sequence (see Section 18.6).

CCIF, ACCERR, and FPVIOL bits are readable and writable, MGBUSY and MGSTAT bits are readable but not writable, while remaining bits read 0 and are not writable.

Table 18-15. FSTAT Field Descriptions

Field	Description
7 CCIF	**Command Complete Interrupt Flag** — The CCIF flag indicates that a Flash command has completed. The CCIF flag is cleared by writing a 1 to CCIF to launch a command and CCIF will stay low until command completion or command violation. 0 Flash command in progress 1 Flash command has completed
5 ACCERR	**Flash Access Error Flag** — The ACCERR bit indicates an illegal access has occurred to the Flash memory caused by either a violation of the command write sequence (see Section 18.4.1.2) or issuing an illegal Flash command. While ACCERR is set, the CCIF flag cannot be cleared to launch a command. The ACCERR bit is cleared by writing a 1 to ACCERR. Writing a 0 to the ACCERR bit has no effect on ACCERR. 0 No access error detected 1 Access error detected
4 FPVIOL	**Flash Protection Violation Flag** —The FPVIOL bit indicates an attempt was made to program or erase an address in a protected area of P-Flash or D-Flash memory during a command write sequence. The FPVIOL bit is cleared by writing a 1 to FPVIOL. Writing a 0 to the FPVIOL bit has no effect on FPVIOL. While FPVIOL is set, it is not possible to launch a command or start a command write sequence. 0 No protection violation detected 1 Protection violation detected
3 MGBUSY	**Memory Controller Busy Flag** — The MGBUSY flag reflects the active state of the Memory Controller. 0 Memory Controller is idle 1 Memory Controller is busy executing a Flash command (CCIF = 0)
2 RSVD	**Reserved Bit** — This bit is reserved and always reads 0.
1–0 MGSTAT[1:0]	**Memory Controller Command Completion Status Flag** — One or more MGSTAT flag bits are set if an error is detected during execution of a Flash command or during the Flash reset sequence. See Section 18.4.2, “Flash Command Description,” and Section 18.6, “Initialization” for details.

18.3.2.8 Flash Error Status Register (FERSTAT)

The FERSTAT register reflects the error status of internal Flash operations.

Offset Module Base + 0x0007

	7	6	5	4	3	2	1	0
R	0	0	0	0	0	0	DFDIF	SFDIF
W								
Reset	0	0	0	0	0	0	0	0

= Unimplemented or Reserved

Figure 18-12. Flash Error Status Register (FERSTAT)

All flags in the FERSTAT register are readable and only writable to clear the flag.

Table 18-16. FERSTAT Field Descriptions

Field	Description
1 DFDIF	**Double Bit Fault Detect Interrupt Flag** — The setting of the DFDIF flag indicates that a double bit fault was detected in the stored parity and data bits during a Flash array read operation or that a Flash array read operation was attempted on a Flash block that was under a Flash command operation. The DFDIF flag is cleared by writing a 1 to DFDIF. Writing a 0 to DFDIF has no effect on DFDIF. 0 No double bit fault detected 1 Double bit fault detected or an invalid Flash array read operation attempted
0 SFDIF	**Single Bit Fault Detect Interrupt Flag** — With the IGNSF bit in the FCNFG register clear, the SFDIF flag indicates that a single bit fault was detected in the stored parity and data bits during a Flash array read operation or that a Flash array read operation was attempted on a Flash block that was under a Flash command operation. The SFDIF flag is cleared by writing a 1 to SFDIF. Writing a 0 to SFDIF has no effect on SFDIF. 0 No single bit fault detected 1 Single bit fault detected and corrected or an invalid Flash array read operation attempted

18.3.2.9 P-Flash Protection Register (FPROT)

The FPROT register defines which P-Flash sectors are protected against program and erase operations.

Offset Module Base + 0x0008

	7	6	5	4	3	2	1	0
R W	FPOPEN	RNV6	FPHDIS	FPHS[1:0]		FPLDIS	FPLS[1:0]	
Reset	F	F	F	F	F	F	F	F

= Unimplemented or Reserved

Figure 18-13. Flash Protection Register (FPROT)

The (unreserved) bits of the FPROT register are writable with the restriction that the size of the protected region can only be increased (see Section 18.3.2.9.1, “P-Flash Protection Restrictions,” and Table 18-21).

During the reset sequence, the FPROT register is loaded with the contents of the P-Flash protection byte in the Flash configuration field at global address 0x7F_FF0C located in P-Flash memory (see Table 18-3) as indicated by reset condition ‘F’ in Figure 18-13. To change the P-Flash protection that will be loaded during the reset sequence, the upper sector of the P-Flash memory must be unprotected, then the P-Flash protection byte must be reprogrammed. If a double bit fault is detected while reading the P-Flash phrase containing the P-Flash protection byte during the reset sequence, the FPOPEN bit will be cleared and remaining bits in the FPROT register will be set to leave the P-Flash memory fully protected.

Trying to alter data in any protected area in the P-Flash memory will result in a protection violation error and the FPVIOL bit will be set in the FSTAT register. The block erase of a P-Flash block is not possible if any of the P-Flash sectors contained in the same P-Flash block are protected.

Table 18-17. FPROT Field Descriptions

Field	Description
7 FPOPEN	**Flash Protection Operation Enable** — The FPOPEN bit determines the protection function for program or erase operations as shown in Table 18-18 for the P-Flash block. 0 When FPOPEN is clear, the FPHDIS and FPLDIS bits define unprotected address ranges as specified by the corresponding FPHS and FPLS bits 1 When FPOPEN is set, the FPHDIS and FPLDIS bits enable protection for the address range specified by the corresponding FPHS and FPLS bits
6 RNV[6]	**Reserved Nonvolatile Bit** — The RNV bit should remain in the erased state for future enhancements.
5 FPHDIS	**Flash Protection Higher Address Range Disable** — The FPHDIS bit determines whether there is a protected/unprotected area in a specific region of the P-Flash memory ending with global address 0x7F_FFFF. 0 Protection/Unprotection enabled 1 Protection/Unprotection disabled
4–3 FPHS[1:0]	**Flash Protection Higher Address Size** — The FPHS bits determine the size of the protected/unprotected area in P-Flash memory as shown inTable 18-19. The FPHS bits can only be written to while the FPHDIS bit is set.
2 FPLDIS	**Flash Protection Lower Address Range Disable** — The FPLDIS bit determines whether there is a protected/unprotected area in a specific region of the P-Flash memory beginning with global address 0x7F_8000. 0 Protection/Unprotection enabled 1 Protection/Unprotection disabled
1–0 FPLS[1:0]	**Flash Protection Lower Address Size** — The FPLS bits determine the size of the protected/unprotected area in P-Flash memory as shown in Table 18-20. The FPLS bits can only be written to while the FPLDIS bit is set.

Table 18-18. P-Flash Protection Function

FPOPEN	FPHDIS	FPLDIS	Function[1]
1	1	1	No P-Flash Protection
1	1	0	Protected Low Range
1	0	1	Protected High Range
1	0	0	Protected High and Low Ranges
0	1	1	Full P-Flash Memory Protected
0	1	0	Unprotected Low Range
0	0	1	Unprotected High Range
0	0	0	Unprotected High and Low Ranges

[1] For range sizes, refer to Table 18-19 and Table 18-20.

Table 18-19. P-Flash Protection Higher Address Range

FPHS[1:0]	Global Address Range	Protected Size
00	0x7F_F800–0x7F_FFFF	2 Kbytes
01	0x7F_F000–0x7F_FFFF	4 Kbytes
10	0x7F_E000–0x7F_FFFF	8 Kbytes
11	0x7F_C000–0x7F_FFFF	16 Kbytes

Table 18-20. P-Flash Protection Lower Address Range

FPLS[1:0]	Global Address Range	Protected Size
00	0x7F_8000–0x7F_83FF	1 Kbyte
01	0x7F_8000–0x7F_87FF	2 Kbytes
10	0x7F_8000–0x7F_8FFF	4 Kbytes
11	0x7F_8000–0x7F_9FFF	8 Kbytes

All possible P-Flash protection scenarios are shown in Figure 18-14. Although the protection scheme is loaded from the Flash memory at global address 0x7F_FF0C during the reset sequence, it can be changed by the user. The P-Flash protection scheme can be used by applications requiring reprogramming in single chip mode while providing as much protection as possible if reprogramming is not required.

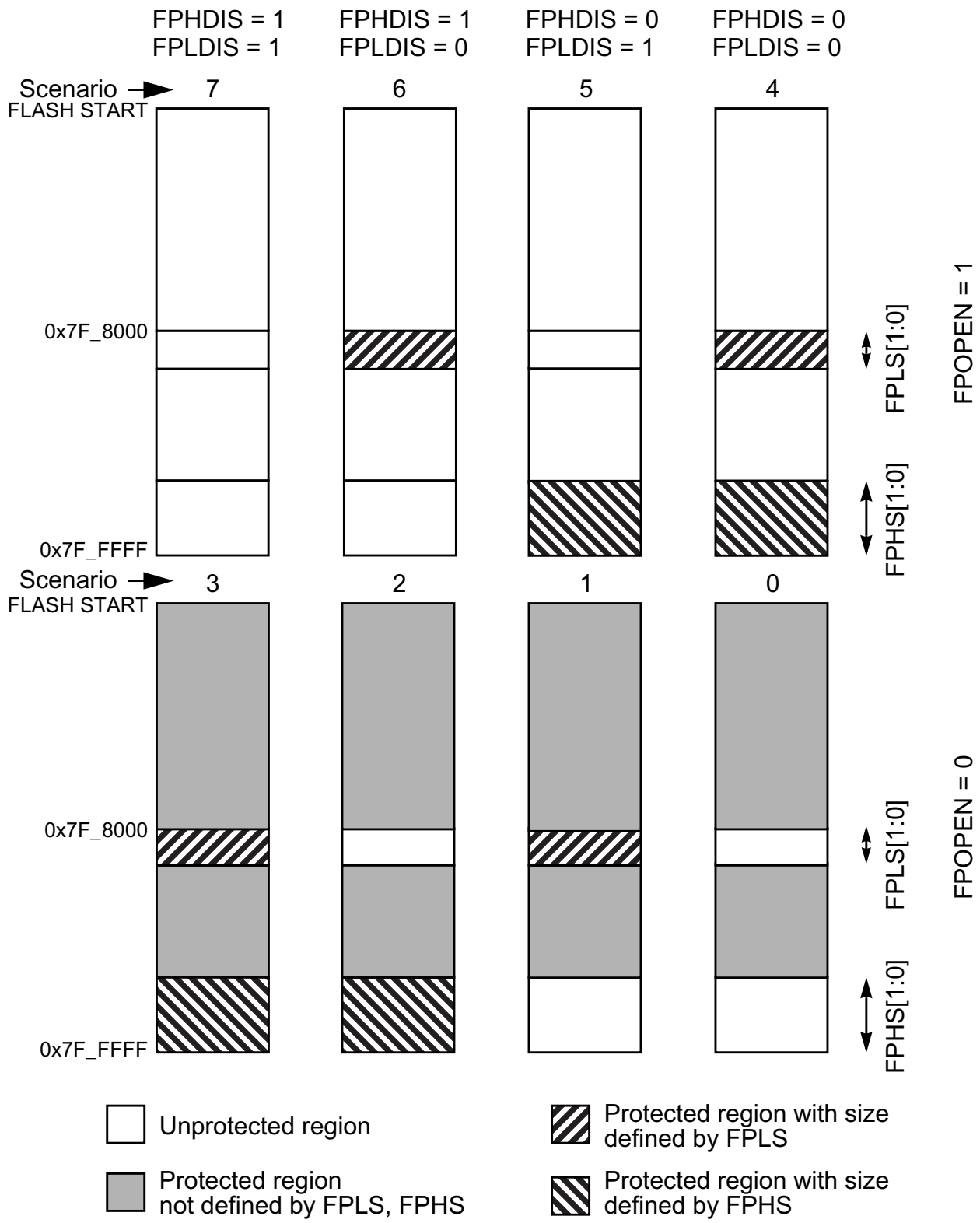

Figure 18-14. P-Flash Protection Scenarios

18.3.2.9.1 P-Flash Protection Restrictions

The general guideline is that P-Flash protection can only be added and not removed. Table 18-21 specifies all valid transitions between P-Flash protection scenarios. Any attempt to write an invalid scenario to the FPROT register will be ignored. The contents of the FPROT register reflect the active protection scenario. See the FPHS and FPLS bit descriptions for additional restrictions.

Table 18-21. P-Flash Protection Scenario Transitions

From Protection Scenario	To Protection Scenario[1]							
	0	1	2	3	4	5	6	7
0	X	X	X	X				
1		X		X				
2			X	X				
3				X				
4				X	X			
5			X	X	X	X		
6		X		X	X		X	
7	X	X	X	X	X	X	X	X

[1] Allowed transitions marked with X, see Figure 18-14 for a definition of the scenarios.

18.3.2.10 D-Flash Protection Register (DFPROT)

The DFPROT register defines which D-Flash sectors are protected against program and erase operations.

Offset Module Base + 0x0009

	7	6	5	4	3	2	1	0
R	DPOPEN	0	0	DPS[4:0]				
W								
Reset	F	0	0	F	F	F	F	F

= Unimplemented or Reserved

Figure 18-15. D-Flash Protection Register (DFPROT)

The (unreserved) bits of the DFPROT register are writable with the restriction that protection can be added but not removed. Writes must increase the DPS value and the DPOEN bit can only be written from 1 (protection disabled) to 0 (protection enabled). If the DPOPEN bit is set, the state of the DPS bits is irrelevant.

During the reset sequence, the DFPROT register is loaded with the contents of the D-Flash protection byte in the Flash configuration field at global address 0x7F_FF0D located in P-Flash memory (see Table 18-3) as indicated by reset condition F in Figure 18-15. To change the D-Flash protection that will be loaded during the reset sequence, the P-Flash sector containing the D-Flash protection byte must be unprotected, then the D-Flash protection byte must be programmed. If a double bit fault is detected while reading the

P-Flash phrase containing the D-Flash protection byte during the reset sequence, the DPOPEN bit will be cleared and DPS bits will be set to leave the D-Flash memory fully protected.

Trying to alter data in any protected area in the D-Flash memory will result in a protection violation error and the FPVIOL bit will be set in the FSTAT register. Block erase of the D-Flash memory is not possible if any of the D-Flash sectors are protected.

Table 18-22. DFPROT Field Descriptions

Field	Description
7 DPOPEN	**D-Flash Protection Control** 0 Enables D-Flash memory protection from program and erase with protected address range defined by DPS bits 1 Disables D-Flash memory protection from program and erase
4–0 DPS[4:0]	**D-Flash Protection Size** — The DPS[4:0] bits determine the size of the protected area in the D-Flash memory as shown in Table 18-23.

Table 18-23. D-Flash Protection Address Range

DPS[4:0]	Global Address Range	Protected Size
0_0000	0x10_0000 – 0x10_00FF	256 bytes
0_0001	0x10_0000 – 0x10_01FF	512 bytes
0_0010	0x10_0000 – 0x10_02FF	768 bytes
0_0011	0x10_0000 – 0x10_03FF	1024 bytes
0_0100	0x10_0000 – 0x10_04FF	1280 bytes
0_0101	0x10_0000 – 0x10_05FF	1536 bytes
0_0110	0x10_0000 – 0x10_06FF	1792 bytes
0_0111	0x10_0000 – 0x10_07FF	2048 bytes
0_1000	0x10_0000 – 0x10_08FF	2304 bytes
0_1001	0x10_0000 – 0x10_09FF	2560 bytes
0_1010	0x10_0000 – 0x10_0AFF	2816 bytes
0_1011	0x10_0000 – 0x10_0BFF	3072 bytes
0_1100	0x10_0000 – 0x10_0CFF	3328 bytes
0_1101	0x10_0000 – 0x10_0DFF	3584 bytes
0_1110	0x10_0000 – 0x10_0EFF	3840 bytes
0_1111	0x10_0000 – 0x10_0FFF	4096 bytes
1_0000	0x10_0000 – 0x10_10FF	4352 bytes
1_0001	0x10_0000 – 0x10_11FF	4608 bytes
1_0010	0x10_0000 – 0x10_12FF	4864 bytes
1_0011	0x10_0000 – 0x10_13FF	5120 bytes
1_0100	0x10_0000 – 0x10_14FF	5376 bytes
1_0101	0x10_0000 – 0x10_15FF	5632 bytes

Table 18-23. D-Flash Protection Address Range

DPS[4:0]	Global Address Range	Protected Size
1_0110	0x10_0000 – 0x10_16FF	5888 bytes
1_0111	0x10_0000 – 0x10_17FF	6144 bytes
1_1000	0x10_0000 – 0x10_18FF	6400 bytes
1_1001	0x10_0000 – 0x10_19FF	6656 bytes
1_1010	0x10_0000 – 0x10_1AFF	6912 bytes
1_1011	0x10_0000 – 0x10_1BFF	7168 bytes
1_1100	0x10_0000 – 0x10_1CFF	7424 bytes
1_1101	0x10_0000 – 0x10_1DFF	7680 bytes
1_1110	0x10_0000 – 0x10_1EFF	7936 bytes
1_1111	0x10_0000 – 0x10_1FFF	8192 bytes

18.3.2.11 Flash Common Command Object Register (FCCOB)

The FCCOB is an array of six words addressed via the CCOBIX index found in the FCCOBIX register. Byte wide reads and writes are allowed to the FCCOB register.

Offset Module Base + 0x000A

	7	6	5	4	3	2	1	0
R/W	CCOB[15:8]							
Reset	0	0	0	0	0	0	0	0

Figure 18-16. Flash Common Command Object High Register (FCCOBHI)

Offset Module Base + 0x000B

	7	6	5	4	3	2	1	0
R/W	CCOB[7:0]							
Reset	0	0	0	0	0	0	0	0

Figure 18-17. Flash Common Command Object Low Register (FCCOBLO)

18.3.2.11.1 FCCOB - NVM Command Mode

NVM command mode uses the indexed FCCOB register to provide a command code and its relevant parameters to the Memory Controller. The user first sets up all required FCCOB fields and then initiates the command's execution by writing a 1 to the CCIF bit in the FSTAT register (a 1 written by the user clears the CCIF command completion flag to 0). When the user clears the CCIF bit in the FSTAT register all FCCOB parameter fields are locked and cannot be changed by the user until the command completes

(as evidenced by the Memory Controller returning CCIF to 1). Some commands return information to the FCCOB register array.

The generic format for the FCCOB parameter fields in NVM command mode is shown in Table 18-24. The return values are available for reading after the CCIF flag in the FSTAT register has been returned to 1 by the Memory Controller. Writes to the unimplemented parameter fields (CCOBIX = 110 and CCOBIX = 111) are ignored with reads from these fields returning 0x0000.

Table 18-24 shows the generic Flash command format. The high byte of the first word in the CCOB array contains the command code, followed by the parameters for this specific Flash command. For details on the FCCOB settings required by each command, see the Flash command descriptions in Section 18.4.2.

Table 18-24. FCCOB - NVM Command Mode (Typical Usage)

CCOBIX[2:0]	Byte	FCCOB Parameter Fields (NVM Command Mode)
000	HI	FCMD[7:0] defining Flash command
	LO	0, Global address [22:16]
001	HI	Global address [15:8]
	LO	Global address [7:0]
010	HI	Data 0 [15:8]
	LO	Data 0 [7:0]
011	HI	Data 1 [15:8]
	LO	Data 1 [7:0]
100	HI	Data 2 [15:8]
	LO	Data 2 [7:0]
101	HI	Data 3 [15:8]
	LO	Data 3 [7:0]

18.3.2.12 Flash Reserved0 Register (FRSV0)

This Flash register is reserved for factory testing.

Offset Module Base + 0x000C

	7	6	5	4	3	2	1	0
R	0	0	0	0	0	0	0	0
W								
Reset	0	0	0	0	0	0	0	0

= Unimplemented or Reserved

Figure 18-18. Flash Reserved0 Register (FRSV0)

All bits in the FRSV0 register read 0 and are not writable.

18.3.2.13 Flash Reserved1 Register (FRSV1)

This Flash register is reserved for factory testing.

Offset Module Base + 0x000D

	7	6	5	4	3	2	1	0
R	0	0	0	0	0	0	0	0
W								
Reset	0	0	0	0	0	0	0	0

= Unimplemented or Reserved

Figure 18-19. Flash Reserved1 Register (FRSV1)

All bits in the FRSV1 register read 0 and are not writable.

18.3.2.14 Flash ECC Error Results Register (FECCR)

The FECCR registers contain the result of a detected ECC fault for both single bit and double bit faults. The FECCR register provides access to several ECC related fields as defined by the ECCRIX index bits in the FECCRIX register (see Section 18.3.2.4). Once ECC fault information has been stored, no other fault information will be recorded until the specific ECC fault flag has been cleared. In the event of simultaneous ECC faults the priority for fault recording is double bit fault over single bit fault.

Offset Module Base + 0x000E

	7	6	5	4	3	2	1	0
R	ECCR[15:8]							
W								
Reset	0	0	0	0	0	0	0	0

= Unimplemented or Reserved

Figure 18-20. Flash ECC Error Results High Register (FECCRHI)

Offset Module Base + 0x000F

	7	6	5	4	3	2	1	0
R	ECCR[7:0]							
W								
Reset	0	0	0	0	0	0	0	0

= Unimplemented or Reserved

Figure 18-21. Flash ECC Error Results Low Register (FECCRLO)

All FECCR bits are readable but not writable.

Table 18-25. FECCR Index Settings

ECCRIX[2:0]	FECCR Register Content		
	Bits [15:8]	**Bit[7]**	**Bits[6:0]**
000	Parity bits read from Flash block	0	Global address [22:16]
001	Global address [15:0]		
010	Data 0 [15:0]		
011	Data 1 [15:0] (P-Flash only)		
100	Data 2 [15:0] (P-Flash only)		
101	Data 3 [15:0] (P-Flash only)		
110	Not used, returns 0x0000 when read		
111	Not used, returns 0x0000 when read		

Table 18-26. FECCR Index=000 Bit Descriptions

Field	Description
15:8 PAR[7:0]	**ECC Parity Bits** — Contains the 8 parity bits from the 72 bit wide P-Flash data word or the 6 parity bits, allocated to PAR[5:0], from the 22 bit wide D-Flash word with PAR[7:6]=00.
6–0 GADDR[22:16]	**Global Address** — The GADDR[22:16] field contains the upper seven bits of the global address having caused the error.

The P-Flash word addressed by ECCRIX = 001 contains the lower 16 bits of the global address. The following four words addressed by ECCRIX = 010 to 101 contain the 64-bit wide data phrase. The four data words and the parity byte are the uncorrected data read from the P-Flash block.

The D-Flash word addressed by ECCRIX = 001 contains the lower 16 bits of the global address. The uncorrected 16-bit data word is addressed by ECCRIX = 010.

18.3.2.15 Flash Option Register (FOPT)

The FOPT register is the Flash option register.

Offset Module Base + 0x0010

	7	6	5	4	3	2	1	0
R	NV[7:0]							
W								
Reset	F	F	F	F	F	F	F	F

= Unimplemented or Reserved

Figure 18-22. Flash Option Register (FOPT)

All bits in the FOPT register are readable but are not writable.

During the reset sequence, the FOPT register is loaded from the Flash nonvolatile byte in the Flash configuration field at global address 0x7F_FF0E located in P-Flash memory (see Table 18-3) as indicated by reset condition F in Figure 18-22. If a double bit fault is detected while reading the P-Flash phrase containing the Flash nonvolatile byte during the reset sequence, all bits in the FOPT register will be set.

Table 18-27. FOPT Field Descriptions

Field	Description
7–0 NV[7:0]	**Nonvolatile Bits** — The NV[7:0] bits are available as nonvolatile bits. Refer to the device user guide for proper use of the NV bits.

18.3.2.16 Flash Reserved2 Register (FRSV2)

This Flash register is reserved for factory testing.

Offset Module Base + 0x0011

	7	6	5	4	3	2	1	0
R	0	0	0	0	0	0	0	0
W								
Reset	0	0	0	0	0	0	0	0

= Unimplemented or Reserved

Figure 18-23. Flash Reserved2 Register (FRSV2)

All bits in the FRSV2 register read 0 and are not writable.

18.3.2.17 Flash Reserved3 Register (FRSV3)

This Flash register is reserved for factory testing.

Offset Module Base + 0x0012

	7	6	5	4	3	2	1	0
R	0	0	0	0	0	0	0	0
W								
Reset	0	0	0	0	0	0	0	0

= Unimplemented or Reserved

Figure 18-24. Flash Reserved3 Register (FRSV3)

All bits in the FRSV3 register read 0 and are not writable.

18.3.2.18 Flash Reserved4 Register (FRSV4)

This Flash register is reserved for factory testing.

Offset Module Base + 0x0013

	7	6	5	4	3	2	1	0
R	0	0	0	0	0	0	0	0
W								
Reset	0	0	0	0	0	0	0	0

= Unimplemented or Reserved

Figure 18-25. Flash Reserved4 Register (FRSV4)

All bits in the FRSV4 register read 0 and are not writable.

18.4 Functional Description

18.4.1 Flash Command Operations

Flash command operations are used to modify Flash memory contents.

The next sections describe:

- How to write the FCLKDIV register that is used to generate a time base (FCLK) derived from OSCCLK for Flash program and erase command operations
- The command write sequence used to set Flash command parameters and launch execution
- Valid Flash commands available for execution

18.4.1.1 Writing the FCLKDIV Register

Prior to issuing any Flash program or erase command after a reset, the user is required to write the FCLKDIV register to divide OSCCLK down to a target FCLK of 1 MHz. Table 18-7 shows recommended values for the FDIV field based on OSCCLK frequency.

NOTE

Programming or erasing the Flash memory cannot be performed if the bus clock runs at less than 1 MHz. Setting FDIV too high can destroy the Flash memory due to overstress. Setting FDIV too low can result in incomplete programming or erasure of the Flash memory cells.

When the FCLKDIV register is written, the FDIVLD bit is set automatically. If the FDIVLD bit is 0, the FCLKDIV register has not been written since the last reset. If the FCLKDIV register has not been written, any Flash program or erase command loaded during a command write sequence will not execute and the ACCERR bit in the FSTAT register will set.

18.4.1.2 Command Write Sequence

The Memory Controller will launch all valid Flash commands entered using a command write sequence.

Before launching a command, the ACCERR and FPVIOL bits in the FSTAT register must be clear (see Section 18.3.2.7) and the CCIF flag should be tested to determine the status of the current command write sequence. If CCIF is 0, the previous command write sequence is still active, a new command write sequence cannot be started, and all writes to the FCCOB register are ignored.

CAUTION

Writes to any Flash register must be avoided while a Flash command is active (CCIF=0) to prevent corruption of Flash register contents and Memory Controller behavior.

18.4.1.2.1 Define FCCOB Contents

The FCCOB parameter fields must be loaded with all required parameters for the Flash command being executed. Access to the FCCOB parameter fields is controlled via the CCOBIX bits in the FCCOBIX register (see Section 18.3.2.3).

The contents of the FCCOB parameter fields are transferred to the Memory Controller when the user clears the CCIF command completion flag in the FSTAT register (writing 1 clears the CCIF to 0). The CCIF flag will remain clear until the Flash command has completed. Upon completion, the Memory Controller will return CCIF to 1 and the FCCOB register will be used to communicate any results. The flow for a generic command write sequence is shown in Figure 18-26.

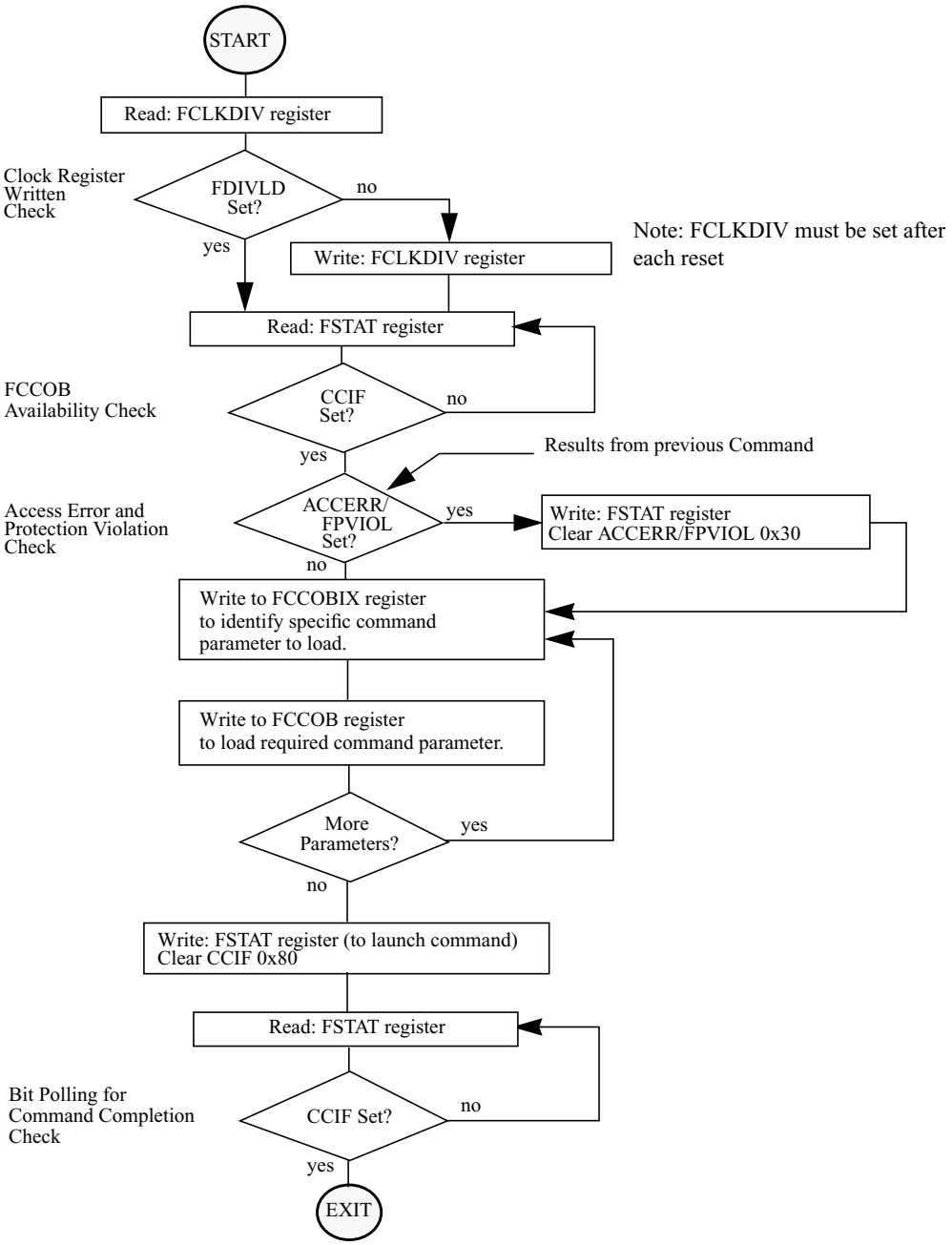

Figure 18-26. Generic Flash Command Write Sequence Flowchart

18.4.1.3 Valid Flash Module Commands

Table 18-28. Flash Commands by Mode

FCMD	Command	Unsecured				Secured			
		NS[1]	NX[2]	SS[3]	ST[4]	NS[5]	NX[6]	SS[7]	ST[8]
0x01	Erase Verify All Blocks	*	*	*	*	*	*	*	*
0x02	Erase Verify Block	*	*	*	*	*	*	*	*
0x03	Erase Verify P-Flash Section	*	*	*	*	*			
0x04	Read Once	*	*	*	*	*			
0x06	Program P-Flash	*	*	*	*	*			
0x07	Program Once	*	*	*	*	*			
0x08	Erase All Blocks			*	*			*	*
0x09	Erase Flash Block	*	*	*	*	*			
0x0A	Erase P-Flash Sector	*	*	*	*	*			
0x0B	Unsecure Flash			*	*			*	*
0x0C	Verify Backdoor Access Key	*				*			
0x0D	Set User Margin Level	*	*	*	*	*			
0x0E	Set Field Margin Level			*	*				
0x10	Erase Verify D-Flash Section	*	*	*	*	*			
0x11	Program D-Flash	*	*	*	*	*			
0x12	Erase D-Flash Sector	*	*	*	*	*			

1 Unsecured Normal Single Chip mode.
2 Unsecured Normal Expanded mode.
3 Unsecured Special Single Chip mode.
4 Unsecured Special Mode.
5 Secured Normal Single Chip mode.
6 Secured Normal Expanded mode.
7 Secured Special Single Chip mode.
8 Secured Special Mode.

18.4.1.4 P-Flash Commands

Table 18-29 summarizes the valid P-Flash commands along with the effects of the commands on the P-Flash block and other resources within the Flash module.

Table 18-29. P-Flash Commands

FCMD	Command	Function on P-Flash Memory
0x01	Erase Verify All Blocks	Verify that all P-Flash (and D-Flash) blocks are erased.
0x02	Erase Verify Block	Verify that a P-Flash block is erased.
0x03	Erase Verify P-Flash Section	Verify that a given number of words starting at the address provided are erased.
0x04	Read Once	Read a dedicated 64 byte field in the nonvolatile information register in P-Flash block 0 that was previously programmed using the Program Once command.
0x06	Program P-Flash	Program a phrase in a P-Flash block.
0x07	Program Once	Program a dedicated 64 byte field in the nonvolatile information register in P-Flash block 0 that is allowed to be programmed only once.
0x08	Erase All Blocks	Erase all P-Flash (and D-Flash) blocks. An erase of all Flash blocks is only possible when the FPLDIS, FPHDIS, and FPOPEN bits in the FPROT register and the DPOPEN bit in the DFPROT register are set prior to launching the command.
0x09	Erase Flash Block	Erase a P-Flash (or D-Flash) block. An erase of the full P-Flash block is only possible when FPLDIS, FPHDIS and FPOPEN bits in the FPROT register are set prior to launching the command.
0x0A	Erase P-Flash Sector	Erase all bytes in a P-Flash sector.
0x0B	Unsecure Flash	Supports a method of releasing MCU security by erasing all P-Flash (and D-Flash) blocks and verifying that all P-Flash (and D-Flash) blocks are erased.
0x0C	Verify Backdoor Access Key	Supports a method of releasing MCU security by verifying a set of security keys.
0x0D	Set User Margin Level	Specifies a user margin read level for all P-Flash blocks.
0x0E	Set Field Margin Level	Specifies a field margin read level for all P-Flash blocks (special modes only).

18.4.1.5 D-Flash Commands

Table 18-30 summarizes the valid D-Flash commands along with the effects of the commands on the D-Flash block.

Table 18-30. D-Flash Commands

FCMD	Command	Function on D-Flash Memory
0x01	Erase Verify All Blocks	Verify that all D-Flash (and P-Flash) blocks are erased.
0x02	Erase Verify Block	Verify that the D-Flash block is erased.
0x08	Erase All Blocks	Erase all D-Flash (and P-Flash) blocks. An erase of all Flash blocks is only possible when the FPLDIS, FPHDIS, and FPOPEN bits in the FPROT register and the DPOPEN bit in the DFPROT register are set prior to launching the command.
0x09	Erase Flash Block	Erase a D-Flash (or P-Flash) block. An erase of the full D-Flash block is only possible when DPOPEN bit in the DFPROT register is set prior to launching the command.

Table 18-30. D-Flash Commands

FCMD	Command	Function on D-Flash Memory
0x0B	Unsecure Flash	Supports a method of releasing MCU security by erasing all D-Flash (and P-Flash) blocks and verifying that all D-Flash (and P-Flash) blocks are erased.
0x0D	Set User Margin Level	Specifies a user margin read level for the D-Flash block.
0x0E	Set Field Margin Level	Specifies a field margin read level for the D-Flash block (special modes only).
0x10	Erase Verify D-Flash Section	Verify that a given number of words starting at the address provided are erased.
0x11	Program D-Flash	Program up to four words in the D-Flash block.
0x12	Erase D-Flash Sector	Erase all bytes in a sector of the D-Flash block.

18.4.2 Flash Command Description

This section provides details of all available Flash commands launched by a command write sequence. The ACCERR bit in the FSTAT register will be set during the command write sequence if any of the following illegal steps are performed, causing the command not to be processed by the Memory Controller:

- Starting any command write sequence that programs or erases Flash memory before initializing the FCLKDIV register
- Writing an invalid command as part of the command write sequence
- For additional possible errors, refer to the error handling table provided for each command

If a Flash block is read during execution of an algorithm (CCIF = 0) on that same block, the read operation will return invalid data. If the SFDIF or DFDIF flags were not previously set when the invalid read operation occurred, both the SFDIF and DFDIF flags will be set and the FECCR registers will be loaded with the global address used in the invalid read operation with the data and parity fields set to all 0.

If the ACCERR or FPVIOL bits are set in the FSTAT register, the user must clear these bits before starting any command write sequence (see Section 18.3.2.7).

CAUTION

A Flash word or phrase must be in the erased state before being programmed. Cumulative programming of bits within a Flash word or phrase is not allowed.

18.4.2.1 Erase Verify All Blocks Command

The Erase Verify All Blocks command will verify that all P-Flash and D-Flash blocks have been erased.

Table 18-31. Erase Verify All Blocks Command FCCOB Requirements

CCOBIX[2:0]	FCCOB Parameters	
000	0x01	Not required

Upon clearing CCIF to launch the Erase Verify All Blocks command, the Memory Controller will verify that the entire Flash memory space is erased. The CCIF flag will set after the Erase Verify All Blocks operation has completed.

Table 18-32. Erase Verify All Blocks Command Error Handling

Register	Error Bit	Error Condition
FSTAT	ACCERR	Set if CCOBIX[2:0] != 000 at command launch
	FPVIOL	None
	MGSTAT1	Set if any errors have been encountered during the read
	MGSTAT0	Set if any non-correctable errors have been encountered during the read

18.4.2.2 Erase Verify Block Command

The Erase Verify Block command allows the user to verify that an entire P-Flash or D-Flash block has been erased. The FCCOB upper global address bits determine which block must be verified.

Table 18-33. Erase Verify Block Command FCCOB Requirements

CCOBIX[2:0]	FCCOB Parameters	
000	0x02	Global address [22:16] of the Flash block to be verified.

Upon clearing CCIF to launch the Erase Verify Block command, the Memory Controller will verify that the selected P-Flash or D-Flash block is erased. The CCIF flag will set after the Erase Verify Block operation has completed.

Table 18-34. Erase Verify Block Command Error Handling

Register	Error Bit	Error Condition
FSTAT	ACCERR	Set if CCOBIX[2:0] != 000 at command launch
		Set if an invalid global address [22:16] is supplied
	FPVIOL	None
	MGSTAT1	Set if any errors have been encountered during the read
	MGSTAT0	Set if any non-correctable errors have been encountered during the read

18.4.2.3 Erase Verify P-Flash Section Command

The Erase Verify P-Flash Section command will verify that a section of code in the P-Flash memory is erased. The Erase Verify P-Flash Section command defines the starting point of the code to be verified and the number of phrases. The section to be verified cannot cross a 256 Kbyte boundary in the P-Flash memory space.

Table 18-35. Erase Verify P-Flash Section Command FCCOB Requirements

CCOBIX[2:0]	FCCOB Parameters	
000	0x03	Global address [22:16] of a P-Flash block
001	Global address [15:0] of the first phrase to be verified	
010	Number of phrases to be verified	

Upon clearing CCIF to launch the Erase Verify P-Flash Section command, the Memory Controller will verify the selected section of Flash memory is erased. The CCIF flag will set after the Erase Verify P-Flash Section operation has completed.

Table 18-36. Erase Verify P-Flash Section Command Error Handling

Register	Error Bit	Error Condition
FSTAT	ACCERR	Set if CCOBIX[2:0] != 010 at command launch
		Set if command not available in current mode (see Table 18-28)
		Set if an invalid global address [22:0] is supplied
		Set if a misaligned phrase address is supplied (global address [2:0] != 000)
		Set if the requested section crosses a 256 Kbyte boundary
	FPVIOL	None
	MGSTAT1	Set if any errors have been encountered during the read
	MGSTAT0	Set if any non-correctable errors have been encountered during the read

18.4.2.4 Read Once Command

The Read Once command provides read access to a reserved 64 byte field (8 phrases) located in the nonvolatile information register of P-Flash block 0. The Read Once field is programmed using the Program Once command described in Section 18.4.2.6. The Read Once command must not be executed from the Flash block containing the Program Once reserved field to avoid code runaway.

Table 18-37. Read Once Command FCCOB Requirements

CCOBIX[2:0]	FCCOB Parameters	
000	0x04	Not Required
001	Read Once phrase index (0x0000 - 0x0007)	
010	Read Once word 0 value	
011	Read Once word 1 value	
100	Read Once word 2 value	
101	Read Once word 3 value	

Upon clearing CCIF to launch the Read Once command, a Read Once phrase is fetched and stored in the FCCOB indexed register. The CCIF flag will set after the Read Once operation has completed. Valid

phrase index values for the Read Once command range from 0x0000 to 0x0007. During execution of the Read Once command, any attempt to read addresses within P-Flash block will return invalid data.

Table 18-38. Read Once Command Error Handling

Register	Error Bit	Error Condition
FSTAT	ACCERR	Set if CCOBIX[2:0] != 001 at command launch
		Set if command not available in current mode (see Table 18-28)
		Set if an invalid phrase index is supplied
	FPVIOL	None
	MGSTAT1	Set if any errors have been encountered during the read
	MGSTAT0	Set if any non-correctable errors have been encountered during the read

18.4.2.5 Program P-Flash Command

The Program P-Flash operation will program a previously erased phrase in the P-Flash memory using an embedded algorithm.

CAUTION

A P-Flash phrase must be in the erased state before being programmed. Cumulative programming of bits within a Flash phrase is not allowed.

Table 18-39. Program P-Flash Command FCCOB Requirements

CCOBIX[2:0]	FCCOB Parameters	
000	0x06	Global address [22:16] to identify P-Flash block
001	Global address [15:0] of phrase location to be programmed[1]	
010	Word 0 program value	
011	Word 1 program value	
100	Word 2 program value	
101	Word 3 program value	

[1] Global address [2:0] must be 000

Upon clearing CCIF to launch the Program P-Flash command, the Memory Controller will program the data words to the supplied global address and will then proceed to verify the data words read back as expected. The CCIF flag will set after the Program P-Flash operation has completed.

Table 18-40. Program P-Flash Command Error Handling

Register	Error Bit	Error Condition
FSTAT	ACCERR	Set if CCOBIX[2:0] != 101 at command launch
		Set if command not available in current mode (see Table 18-28)
		Set if an invalid global address [22:0] is supplied
		Set if a misaligned phrase address is supplied (global address [2:0] != 000)
	FPVIOL	Set if the global address [22:0] points to a protected area
	MGSTAT1	Set if any errors have been encountered during the verify operation
	MGSTAT0	Set if any non-correctable errors have been encountered during the verify operation

18.4.2.6 Program Once Command

The Program Once command restricts programming to a reserved 64 byte field (8 phrases) in the nonvolatile information register located in P-Flash block 0. The Program Once reserved field can be read using the Read Once command as described in Section 18.4.2.4. The Program Once command must only be issued once since the nonvolatile information register in P-Flash block 0 cannot be erased. The Program Once command must not be executed from the Flash block containing the Program Once reserved field to avoid code runaway.

Table 18-41. Program Once Command FCCOB Requirements

CCOBIX[2:0]	FCCOB Parameters	
000	0x07	Not Required
001	Program Once phrase index (0x0000 - 0x0007)	
010	Program Once word 0 value	
011	Program Once word 1 value	
100	Program Once word 2 value	
101	Program Once word 3 value	

Upon clearing CCIF to launch the Program Once command, the Memory Controller first verifies that the selected phrase is erased. If erased, then the selected phrase will be programmed and then verified with read back. The CCIF flag will remain clear, setting only after the Program Once operation has completed.

The reserved nonvolatile information register accessed by the Program Once command cannot be erased and any attempt to program one of these phrases a second time will not be allowed. Valid phrase index values for the Program Once command range from 0x0000 to 0x0007. During execution of the Program Once command, any attempt to read addresses within P-Flash block 0 will return invalid data.

Table 18-42. Program Once Command Error Handling

Register	Error Bit	Error Condition
FSTAT	ACCERR	Set if CCOBIX[2:0] != 101 at command launch
		Set if command not available in current mode (see Table 18-28)
		Set if an invalid phrase index is supplied
		Set if the requested phrase has already been programmed[1]
	FPVIOL	None
	MGSTAT1	Set if any errors have been encountered during the verify operation
	MGSTAT0	Set if any non-correctable errors have been encountered during the verify operation

[1] If a Program Once phrase is initially programmed to 0xFFFF_FFFF_FFFF_FFFF, the Program Once command will be allowed to execute again on that same phrase.

18.4.2.7 Erase All Blocks Command

The Erase All Blocks operation will erase the entire P-Flash and D-Flash memory space.

Table 18-43. Erase All Blocks Command FCCOB Requirements

CCOBIX[2:0]	FCCOB Parameters	
000	0x08	Not required

Upon clearing CCIF to launch the Erase All Blocks command, the Memory Controller will erase the entire Flash memory space and verify that it is erased. If the Memory Controller verifies that the entire Flash memory space was properly erased, security will be released. During the execution of this command (CCIF=0) the user must not write to any Flash module register. The CCIF flag will set after the Erase All Blocks operation has completed.

Table 18-44. Erase All Blocks Command Error Handling

Register	Error Bit	Error Condition
FSTAT	ACCERR	Set if CCOBIX[2:0] != 000 at command launch
		Set if command not available in current mode (see Table 18-28)
	FPVIOL	Set if any area of the P-Flash or D-Flash memory is protected
	MGSTAT1	Set if any errors have been encountered during the verify operation
	MGSTAT0	Set if any non-correctable errors have been encountered during the verify operation

18.4.2.8 Erase Flash Block Command

The Erase Flash Block operation will erase all addresses in a P-Flash or D-Flash block.

Table 18-45. Erase Flash Block Command FCCOB Requirements

CCOBIX[2:0]	FCCOB Parameters	
000	0x09	Global address [22:16] to identify Flash block
001	Global address [15:0] in Flash block to be erased	

Upon clearing CCIF to launch the Erase Flash Block command, the Memory Controller will erase the selected Flash block and verify that it is erased. The CCIF flag will set after the Erase Flash Block operation has completed.

Table 18-46. Erase Flash Block Command Error Handling

Register	Error Bit	Error Condition
FSTAT	ACCERR	Set if CCOBIX[2:0] != 001 at command launch
		Set if command not available in current mode (see Table 18-28)
		Set if an invalid global address [22:16] is supplied
		Set if the supplied P-Flash address is not phrase-aligned or if the D-Flash address is not word-aligned
	FPVIOL	Set if an area of the selected Flash block is protected
	MGSTAT1	Set if any errors have been encountered during the verify operation
	MGSTAT0	Set if any non-correctable errors have been encountered during the verify operation

18.4.2.9 Erase P-Flash Sector Command

The Erase P-Flash Sector operation will erase all addresses in a P-Flash sector.

Table 18-47. Erase P-Flash Sector Command FCCOB Requirements

CCOBIX[2:0]	FCCOB Parameters	
000	0x0A	Global address [22:16] to identify P-Flash block to be erased
001	Global address [15:0] anywhere within the sector to be erased. Refer to Section 18.1.2.1 for the P-Flash sector size.	

Upon clearing CCIF to launch the Erase P-Flash Sector command, the Memory Controller will erase the selected Flash sector and then verify that it is erased. The CCIF flag will be set after the Erase P-Flash Sector operation has completed.

Table 18-48. Erase P-Flash Sector Command Error Handling

Register	Error Bit	Error Condition
FSTAT	ACCERR	Set if CCOBIX[2:0] != 001 at command launch
		Set if command not available in current mode (see Table 18-28)
		Set if an invalid global address [22:16] is supplied
		Set if a misaligned phrase address is supplied (global address [2:0] != 000)
	FPVIOL	Set if the selected P-Flash sector is protected
	MGSTAT1	Set if any errors have been encountered during the verify operation
	MGSTAT0	Set if any non-correctable errors have been encountered during the verify operation

18.4.2.10 Unsecure Flash Command

The Unsecure Flash command will erase the entire P-Flash and D-Flash memory space and, if the erase is successful, will release security.

Table 18-49. Unsecure Flash Command FCCOB Requirements

CCOBIX[2:0]	FCCOB Parameters	
000	0x0B	Not required

Upon clearing CCIF to launch the Unsecure Flash command, the Memory Controller will erase the entire P-Flash and D-Flash memory space and verify that it is erased. If the Memory Controller verifies that the entire Flash memory space was properly erased, security will be released. If the erase verify is not successful, the Unsecure Flash operation sets MGSTAT1 and terminates without changing the security state. During the execution of this command (CCIF=0) the user must not write to any Flash module register. The CCIF flag is set after the Unsecure Flash operation has completed.

Table 18-50. Unsecure Flash Command Error Handling

Register	Error Bit	Error Condition
FSTAT	ACCERR	Set if CCOBIX[2:0] != 000 at command launch
		Set if command not available in current mode (see Table 18-28)
	FPVIOL	Set if any area of the P-Flash or D-Flash memory is protected
	MGSTAT1	Set if any errors have been encountered during the verify operation
	MGSTAT0	Set if any non-correctable errors have been encountered during the verify operation

18.4.2.11 Verify Backdoor Access Key Command

The Verify Backdoor Access Key command will only execute if it is enabled by the KEYEN bits in the FSEC register (see Table 18-9). The Verify Backdoor Access Key command releases security if user-supplied keys match those stored in the Flash security bytes of the Flash configuration field (see

Table 18-3). The Verify Backdoor Access Key command must not be executed from the Flash block containing the backdoor comparison key to avoid code runaway.

Table 18-51. Verify Backdoor Access Key Command FCCOB Requirements

CCOBIX[2:0]	FCCOB Parameters	
000	0x0C	Not required
001	Key 0	
010	Key 1	
011	Key 2	
100	Key 3	

Upon clearing CCIF to launch the Verify Backdoor Access Key command, the Memory Controller will check the FSEC KEYEN bits to verify that this command is enabled. If not enabled, the Memory Controller sets the ACCERR bit in the FSTAT register and terminates. If the command is enabled, the Memory Controller compares the key provided in FCCOB to the backdoor comparison key in the Flash configuration field with Key 0 compared to 0x7F_FF00, etc. If the backdoor keys match, security will be released. If the backdoor keys do not match, security is not released and all future attempts to execute the Verify Backdoor Access Key command are aborted (set ACCERR) until a reset occurs. The CCIF flag is set after the Verify Backdoor Access Key operation has completed.

Table 18-52. Verify Backdoor Access Key Command Error Handling

Register	Error Bit	Error Condition
FSTAT	ACCERR	Set if CCOBIX[2:0] != 100 at command launch
		Set if an incorrect backdoor key is supplied
		Set if backdoor key access has not been enabled (KEYEN[1:0] != 10, see Section 18.3.2.2)
		Set if the backdoor key has mismatched since the last reset
	FPVIOL	None
	MGSTAT1	None
	MGSTAT0	None

18.4.2.12 Set User Margin Level Command

The Set User Margin Level command causes the Memory Controller to set the margin level for future read operations of a specific P-Flash or D-Flash block.

Table 18-53. Set User Margin Level Command FCCOB Requirements

CCOBIX[2:0]	FCCOB Parameters	
000	0x0D	Global address [22:16] to identify the Flash block
001	Margin level setting	

Upon clearing CCIF to launch the Set User Margin Level command, the Memory Controller will set the user margin level for the targeted block and then set the CCIF flag.

Valid margin level settings for the Set User Margin Level command are defined in Table 18-54.

Table 18-54. Valid Set User Margin Level Settings

CCOB (CCOBIX=001)	Level Description
0x0000	Return to Normal Level
0x0001	User Margin-1 Level[1]
0x0002	User Margin-0 Level[2]

[1] Read margin to the erased state

[2] Read margin to the programmed state

Table 18-55. Set User Margin Level Command Error Handling

Register	Error Bit	Error Condition
FSTAT	ACCERR	Set if CCOBIX[2:0] != 001 at command launch
		Set if command not available in current mode (see Table 18-28)
		Set if an invalid global address [22:16] is supplied
		Set if an invalid margin level setting is supplied
	FPVIOL	None
	MGSTAT1	None
	MGSTAT0	None

NOTE

User margin levels can be used to check that Flash memory contents have adequate margin for normal level read operations. If unexpected results are encountered when checking Flash memory contents at user margin levels, a potential loss of information has been detected.

18.4.2.13 Set Field Margin Level Command

The Set Field Margin Level command, valid in special modes only, causes the Memory Controller to set the margin level specified for future read operations of a specific P-Flash or D-Flash block.

Table 18-56. Set Field Margin Level Command FCCOB Requirements

CCOBIX[2:0]	FCCOB Parameters	
000	0x0E	Global address [22:16] to identify the Flash block
001	Margin level setting	

Upon clearing CCIF to launch the Set Field Margin Level command, the Memory Controller will set the field margin level for the targeted block and then set the CCIF flag. Valid margin level settings for the Set Field Margin Level command are defined in Table 18-57.

Table 18-57. Valid Set Field Margin Level Settings

CCOB (CCOBIX=001)	Level Description
0x0000	Return to Normal Level
0x0001	User Margin-1 Level[1]
0x0002	User Margin-0 Level[2]
0x0003	Field Margin-1 Level[1]
0x0004	Field Margin-0 Level[2]

[1] Read margin to the erased state
[2] Read margin to the programmed state

Table 18-58. Set Field Margin Level Command Error Handling

Register	Error Bit	Error Condition
FSTAT	ACCERR	Set if CCOBIX[2:0] != 001 at command launch
		Set if command not available in current mode (see Table 18-28)
		Set if an invalid global address [22:16] is supplied
		Set if an invalid margin level setting is supplied
	FPVIOL	None
	MGSTAT1	None
	MGSTAT0	None

CAUTION

Field margin levels must only be used during verify of the initial factory programming.

NOTE

Field margin levels can be used to check that Flash memory contents have adequate margin for data retention at the normal level setting. If unexpected results are encountered when checking Flash memory contents at field margin levels, the Flash memory contents should be erased and reprogrammed.

18.4.2.14 Erase Verify D-Flash Section Command

The Erase Verify D-Flash Section command will verify that a section of code in the D-Flash is erased. The Erase Verify D-Flash Section command defines the starting point of the data to be verified and the number of words.

Table 18-59. Erase Verify D-Flash Section Command FCCOB Requirements

CCOBIX[2:0]	FCCOB Parameters	
000	0x10	Global address [22:16] to identify the D-Flash block
001	Global address [15:0] of the first word to be verified	
010	Number of words to be verified	

Upon clearing CCIF to launch the Erase Verify D-Flash Section command, the Memory Controller will verify the selected section of D-Flash memory is erased. The CCIF flag will set after the Erase Verify D-Flash Section operation has completed.

Table 18-60. Erase Verify D-Flash Section Command Error Handling

Register	Error Bit	Error Condition
FSTAT	ACCERR	Set if CCOBIX[2:0] != 010 at command launch
		Set if command not available in current mode (see Table 18-28)
		Set if an invalid global address [22:0] is supplied
		Set if a misaligned word address is supplied (global address [0] != 0)
		Set if the requested section breaches the end of the D-Flash block
	FPVIOL	None
	MGSTAT1	Set if any errors have been encountered during the read
	MGSTAT0	Set if any non-correctable errors have been encountered during the read

18.4.2.15 Program D-Flash Command

The Program D-Flash operation programs one to four previously erased words in the D-Flash block. The Program D-Flash operation will confirm that the targeted location(s) were successfully programmed upon completion.

CAUTION

A Flash word must be in the erased state before being programmed. Cumulative programming of bits within a Flash word is not allowed.

Table 18-61. Program D-Flash Command FCCOB Requirements

CCOBIX[2:0]	FCCOB Parameters	
000	0x11	Global address [22:16] to identify the D-Flash block
001	Global address [15:0] of word to be programmed	
010	Word 0 program value	
011	Word 1 program value, if desired	
100	Word 2 program value, if desired	

Table 18-61. Program D-Flash Command FCCOB Requirements

CCOBIX[2:0]	FCCOB Parameters
101	Word 3 program value, if desired

Upon clearing CCIF to launch the Program D-Flash command, the user-supplied words will be transferred to the Memory Controller and be programmed if the area is unprotected. The CCOBIX index value at Program D-Flash command launch determines how many words will be programmed in the D-Flash block. The CCIF flag is set when the operation has completed.

Table 18-62. Program D-Flash Command Error Handling

Register	Error Bit	Error Condition
FSTAT	ACCERR	Set if CCOBIX[2:0] < 010 at command launch
		Set if CCOBIX[2:0] > 101 at command launch
		Set if command not available in current mode (see Table 18-28)
		Set if an invalid global address [22:0] is supplied
		Set if a misaligned word address is supplied (global address [0] != 0)
		Set if the requested group of words breaches the end of the D-Flash block
	FPVIOL	Set if the selected area of the D-Flash memory is protected
	MGSTAT1	Set if any errors have been encountered during the verify operation
	MGSTAT0	Set if any non-correctable errors have been encountered during the verify operation

18.4.2.16 Erase D-Flash Sector Command

The Erase D-Flash Sector operation will erase all addresses in a sector of the D-Flash block.

Table 18-63. Erase D-Flash Sector Command FCCOB Requirements

CCOBIX[2:0]	FCCOB Parameters	
000	0x12	Global address [22:16] to identify D-Flash block
001	Global address [15:0] anywhere within the sector to be erased. See Section 18.1.2.2 for D-Flash sector size.	

Upon clearing CCIF to launch the Erase D-Flash Sector command, the Memory Controller will erase the selected Flash sector and verify that it is erased. The CCIF flag will set after the Erase D-Flash Sector operation has completed.

Table 18-64. Erase D-Flash Sector Command Error Handling

Register	Error Bit	Error Condition
FSTAT	ACCERR	Set if CCOBIX[2:0] != 001 at command launch
		Set if command not available in current mode (see Table 18-28)
		Set if an invalid global address [22:0] is supplied
		Set if a misaligned word address is supplied (global address [0] != 0)
	FPVIOL	Set if the selected area of the D-Flash memory is protected
	MGSTAT1	Set if any errors have been encountered during the verify operation
	MGSTAT0	Set if any non-correctable errors have been encountered during the verify operation

18.4.3 Interrupts

The Flash module can generate an interrupt when a Flash command operation has completed or when a Flash command operation has detected an ECC fault.

Table 18-65. Flash Interrupt Sources

Interrupt Source	Interrupt Flag	Local Enable	Global (CCR) Mask
Flash Command Complete	CCIF (FSTAT register)	CCIE (FCNFG register)	I Bit
ECC Double Bit Fault on Flash Read	DFDIF (FERSTAT register)	DFDIE (FERCNFG register)	I Bit
ECC Single Bit Fault on Flash Read	SFDIF (FERSTAT register)	SFDIE (FERCNFG register)	I Bit

NOTE

Vector addresses and their relative interrupt priority are determined at the MCU level.

18.4.3.1 Description of Flash Interrupt Operation

The Flash module uses the CCIF flag in combination with the CCIE interrupt enable bit to generate the Flash command interrupt request. The Flash module uses the DFDIF and SFDIF flags in combination with the DFDIE and SFDIE interrupt enable bits to generate the Flash error interrupt request. For a detailed description of the register bits involved, refer to Section 18.3.2.5, “Flash Configuration Register (FCNFG)”, Section 18.3.2.6, “Flash Error Configuration Register (FERCNFG)”, Section 18.3.2.7, “Flash Status Register (FSTAT)”, and Section 18.3.2.8, “Flash Error Status Register (FERSTAT)”.

The logic used for generating the Flash module interrupts is shown in Figure 18-27.

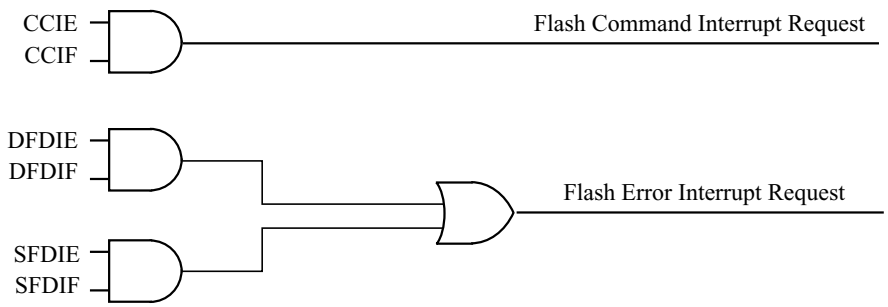

Figure 18-27. Flash Module Interrupts Implementation

18.4.4 Wait Mode

The Flash module is not affected if the MCU enters wait mode. The Flash module can recover the MCU from wait via the CCIF interrupt (see Section 18.4.3, “Interrupts”).

18.4.5 Stop Mode

If a Flash command is active (CCIF = 0) when the MCU requests stop mode, the current Flash operation will be completed before the CPU is allowed to enter stop mode.

18.5 Security

The Flash module provides security information to the MCU. The Flash security state is defined by the SEC bits of the FSEC register (see Table 18-10). During reset, the Flash module initializes the FSEC register using data read from the security byte of the Flash configuration field at global address 0x7F_FF0F.

The security state out of reset can be permanently changed by programming the security byte of the Flash configuration field. This assumes that you are starting from a mode where the necessary P-Flash erase and program commands are available and that the upper region of the P-Flash is unprotected. If the Flash security byte is successfully programmed, its new value will take affect after the next MCU reset.

The following subsections describe these security-related subjects:

- Unsecuring the MCU using Backdoor Key Access
- Unsecuring the MCU in Special Single Chip Mode using BDM
- Mode and Security Effects on Flash Command Availability

18.5.1 Unsecuring the MCU using Backdoor Key Access

The MCU may be unsecured by using the backdoor key access feature which requires knowledge of the contents of the backdoor keys (four 16-bit words programmed at addresses 0x7F_FF00–0x7F_FF07). If the KEYEN[1:0] bits are in the enabled state (see Section 18.3.2.2), the Verify Backdoor Access Key command (see Section 18.4.2.11) allows the user to present four prospective keys for comparison to the

keys stored in the Flash memory via the Memory Controller. If the keys presented in the Verify Backdoor Access Key command match the backdoor keys stored in the Flash memory, the SEC bits in the FSEC register (see Table 18-10) will be changed to unsecure the MCU. Key values of 0x0000 and 0xFFFF are not permitted as backdoor keys. While the Verify Backdoor Access Key command is active, P-Flash block 0 will not be available for read access and will return invalid data.

The user code stored in the P-Flash memory must have a method of receiving the backdoor keys from an external stimulus. This external stimulus would typically be through one of the on-chip serial ports.

If the KEYEN[1:0] bits are in the enabled state (see Section 18.3.2.2), the MCU can be unsecured by the backdoor key access sequence described below:

1. Follow the command sequence for the Verify Backdoor Access Key command as explained in Section 18.4.2.11
2. If the Verify Backdoor Access Key command is successful, the MCU is unsecured and the SEC[1:0] bits in the FSEC register are forced to the unsecure state of 10

The Verify Backdoor Access Key command is monitored by the Memory Controller and an illegal key will prohibit future use of the Verify Backdoor Access Key command. A reset of the MCU is the only method to re-enable the Verify Backdoor Access Key command.

After the backdoor keys have been correctly matched, the MCU will be unsecured. After the MCU is unsecured, the sector containing the Flash security byte can be erased and the Flash security byte can be reprogrammed to the unsecure state, if desired.

In the unsecure state, the user has full control of the contents of the backdoor keys by programming addresses 0x7F_FF00–0x7F_FF07 in the Flash configuration field.

The security as defined in the Flash security byte (0x7F_FF0F) is not changed by using the Verify Backdoor Access Key command sequence. The backdoor keys stored in addresses 0x7F_FF00–0x7F_FF07 are unaffected by the Verify Backdoor Access Key command sequence. After the next reset of the MCU, the security state of the Flash module is determined by the Flash security byte (0x7F_FF0F). The Verify Backdoor Access Key command sequence has no effect on the program and erase protections defined in the Flash protection register, FPROT.

18.5.2 Unsecuring the MCU in Special Single Chip Mode using BDM

The MCU can be unsecured in special single chip mode by erasing the P-Flash and D-Flash memory by one of the following methods:

- Reset the MCU into special single chip mode, delay while the erase test is performed by the BDM, send BDM commands to disable protection in the P-Flash and D-Flash memory, and execute the Erase All Blocks command write sequence to erase the P-Flash and D-Flash memory.
- Reset the MCU into special expanded wide mode, disable protection in the P-Flash and D-Flash memory and run code from external memory to execute the Erase All Blocks command write sequence to erase the P-Flash and D-Flash memory.

After the CCIF flag sets to indicate that the Erase All Blocks operation has completed, reset the MCU into special single chip mode. The BDM will execute the Erase Verify All Blocks command write sequence to verify that the P-Flash and D-Flash memory is erased. If the P-Flash and D-Flash memory are verified as

erased the MCU will be unsecured. All BDM commands will be enabled and the Flash security byte may be programmed to the unsecure state by the following method:

- Send BDM commands to execute a ‘Program P-Flash’ command sequence to program the Flash security byte to the unsecured state and reset the MCU.

18.5.3 Mode and Security Effects on Flash Command Availability

The availability of Flash module commands depends on the MCU operating mode and security state as shown in Table 18-28.

18.6 Initialization

On each system reset the Flash module executes a reset sequence which establishes initial values for the Flash Block Configuration Parameters, the FPROT and DFPROT protection registers, and the FOPT and FSEC registers. The Flash module reverts to built-in default values that leave the module in a fully protected and secured state if errors are encountered during execution of the reset sequence. If a double bit fault is detected during the reset sequence, both MGSTAT bits in the FSTAT register will be set.

CCIF remains clear throughout the reset sequence. The Flash module holds off all CPU access for the initial portion of the reset sequence. While Flash reads are possible when the hold is removed, writes to the FCCOBIX, FCCOBHI, and FCCOBLO registers are ignored to prevent command activity while the Memory Controller remains busy. Completion of the reset sequence is marked by setting CCIF high which enables writes to the FCCOBIX, FCCOBHI, and FCCOBLO registers to launch any available Flash command.

If a reset occurs while any Flash command is in progress, that command will be immediately aborted. The state of the word being programmed or the sector/block being erased is not guaranteed.

Chapter 19
128 KByte Flash Module (S12XFTMR128K1V1)

Table 19-1. Revision History

Revision Number	Revision Date	Sections Affected	Description of Changes
V01.04	03 Jan 2008		- Cosmetic changes
V01.05	19 Dec 2008	19.1/19-557 19.4.2.4/19-592 19.4.2.6/19-594 19.4.2.11/19-597 19.4.2.11/19-597 19.4.2.11/19-597	- Clarify single bit fault correction for P-Flash phrase - Add statement concerning code runaway when executing Read Once, Program Once, and Verify Backdoor Access Key commands from Flash block containing associated fields - Relate Key 0 to associated Backdoor Comparison Key address - Change “power down reset” to “reset” in Section 19.4.2.11
V01.06	25 Sep 2009	19.3.2/19-564 19.3.2.1/19-566 19.4.1.2/19-586 19.6/19-606	The following changes were made to clarify module behavior related to Flash register access during reset sequence and while Flash commands are active: - Add caution concerning register writes while command is active - Writes to FCLKDIV are allowed during reset sequence while CCIF is clear - Add caution concerning register writes while command is active - Writes to FCCOBIX, FCCOBHI, FCCOBLO registers are ignored during reset sequence

19.1 Introduction

The FTMR128K1 module implements the following:

- 128 Kbytes of P-Flash (Program Flash) memory
- 8 Kbytes of D-Flash (Data Flash) memory

The Flash memory is ideal for single-supply applications allowing for field reprogramming without requiring external high voltage sources for program or erase operations. The Flash module includes a memory controller that executes commands to modify Flash memory contents. The user interface to the memory controller consists of the indexed Flash Common Command Object (FCCOB) register which is written to with the command, global address, data, and any required command parameters. The memory controller must complete the execution of a command before the FCCOB register can be written to with a new command.

CAUTION

A Flash word or phrase must be in the erased state before being programmed. Cumulative programming of bits within a Flash word or phrase is not allowed.

The Flash memory may be read as bytes, aligned words, or misaligned words. Read access time is one bus cycle for bytes and aligned words, and two bus cycles for misaligned words. For Flash memory, an erased bit reads 1 and a programmed bit reads 0.

It is not possible to read from a Flash block while any command is executing on that specific Flash block. It is possible to read from a Flash block while a command is executing on a different Flash block.

Both P-Flash and D-Flash memories are implemented with Error Correction Codes (ECC) that can resolve single bit faults and detect double bit faults. For P-Flash memory, the ECC implementation requires that programming be done on an aligned 8 byte basis (a Flash phrase). Since P-Flash memory is always read by phrase, only one single bit fault in the phrase containing the byte or word accessed will be corrected.

19.1.1 Glossary

Command Write Sequence — An MCU instruction sequence to execute built-in algorithms (including program and erase) on the Flash memory.

D-Flash Memory — The D-Flash memory constitutes the nonvolatile memory store for data.

D-Flash Sector — The D-Flash sector is the smallest portion of the D-Flash memory that can be erased. The D-Flash sector consists of four 64 byte rows for a total of 256 bytes.

NVM Command Mode — An NVM mode using the CPU to setup the FCCOB register to pass parameters required for Flash command execution.

Phrase — An aligned group of four 16-bit words within the P-Flash memory. Each phrase includes eight ECC bits for single bit fault correction and double bit fault detection within the phrase.

P-Flash Memory — The P-Flash memory constitutes the main nonvolatile memory store for applications.

P-Flash Sector — The P-Flash sector is the smallest portion of the P-Flash memory that can be erased. Each P-Flash sector contains 1024 bytes.

Program IFR — Nonvolatile information register located in the P-Flash block that contains the Device ID, Version ID, and the Program Once field. The Program IFR is visible in the global memory map by setting the PGMIFRON bit in the MMCCTL1 register.

19.1.2 Features

19.1.2.1 P-Flash Features

- 128 Kbytes of P-Flash memory composed of one 128 Kbyte Flash block divided into 128 sectors of 1024 bytes
- Single bit fault correction and double bit fault detection within a 64-bit phrase during read operations

- Automated program and erase algorithm with verify and generation of ECC parity bits
- Fast sector erase and phrase program operation
- Flexible protection scheme to prevent accidental program or erase of P-Flash memory

19.1.2.2 D-Flash Features

- 8 Kbytes of D-Flash memory composed of one 8 Kbyte Flash block divided into 32 sectors of 256 bytes
- Single bit fault correction and double bit fault detection within a word during read operations
- Automated program and erase algorithm with verify and generation of ECC parity bits
- Fast sector erase and word program operation
- Protection scheme to prevent accidental program or erase of D-Flash memory
- Ability to program up to four words in a burst sequence

19.1.2.3 Other Flash Module Features

- No external high-voltage power supply required for Flash memory program and erase operations
- Interrupt generation on Flash command completion and Flash error detection
- Security mechanism to prevent unauthorized access to the Flash memory

19.1.3 Block Diagram

The block diagram of the Flash module is shown in Figure 19-1.

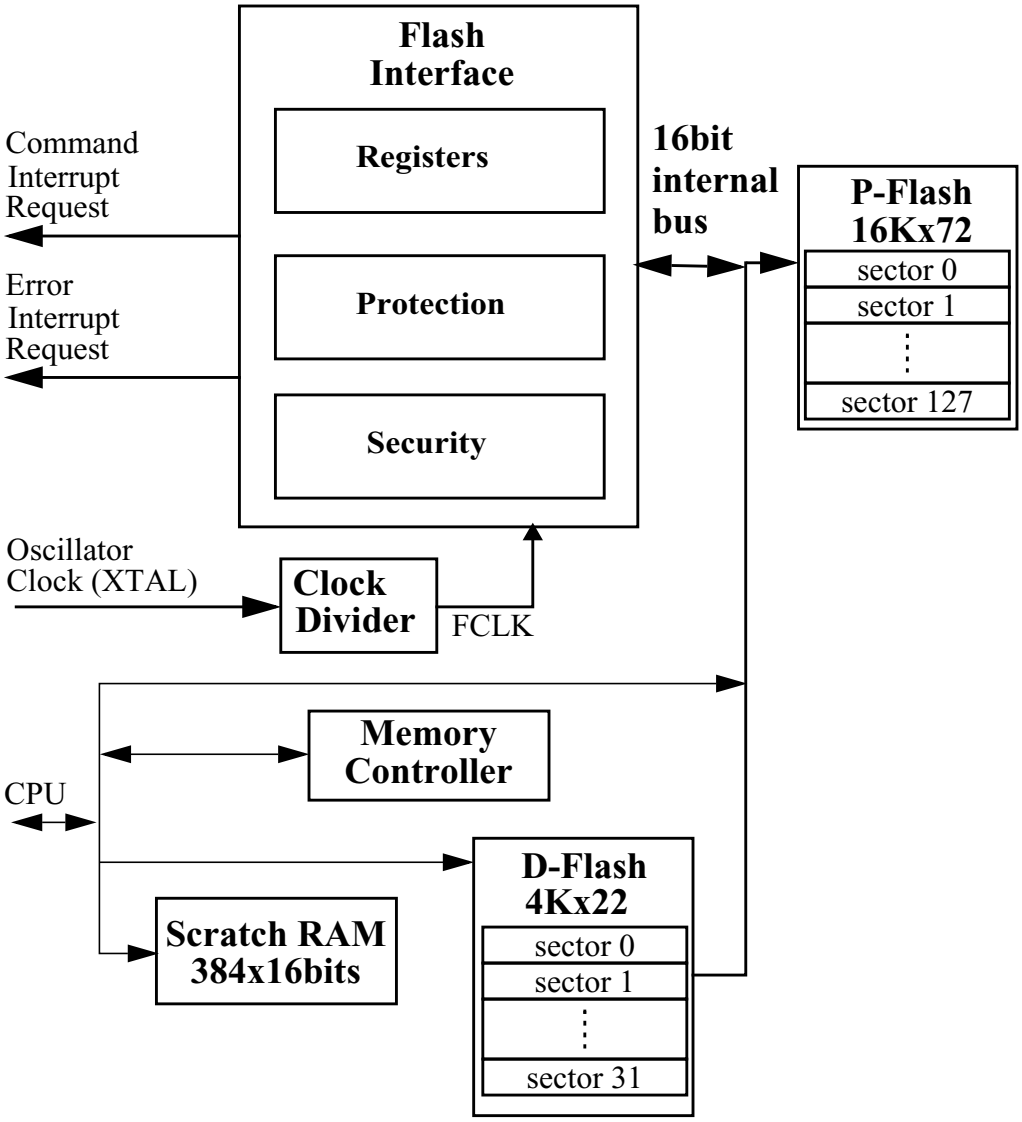

Figure 19-1. FTMR128K1 Block Diagram

19.2 External Signal Description

The Flash module contains no signals that connect off-chip.

19.3 Memory Map and Registers

This section describes the memory map and registers for the Flash module. Read data from unimplemented memory space in the Flash module is undefined. Write access to unimplemented or reserved memory space in the Flash module will be ignored by the Flash module.

19.3.1 Module Memory Map

The S12X architecture places the P-Flash memory between global addresses 0x7E_0000 and 0x7F_FFFF as shown in Table 19-2. The P-Flash memory map is shown in Figure 19-2.

Table 19-2. P-Flash Memory Addressing

Global Address	Size (Bytes)	Description
0x7E_0000 – 0x7F_FFFF	128 K	P-Flash Block 0 Contains Flash Configuration Field (see Table 19-3)

The FPROT register, described in Section 19.3.2.9, can be set to protect regions in the Flash memory from accidental program or erase. Three separate memory regions, one growing upward from global address 0x7F_8000 in the Flash memory (called the lower region), one growing downward from global address 0x7F_FFFF in the Flash memory (called the higher region), and the remaining addresses in the Flash memory, can be activated for protection. The Flash memory addresses covered by these protectable regions are shown in the P-Flash memory map. The higher address region is mainly targeted to hold the boot loader code since it covers the vector space. Default protection settings as well as security information that allows the MCU to restrict access to the Flash module are stored in the Flash configuration field as described in Table 19-3.

Table 19-3. Flash Configuration Field[1]

Global Address	Size (Bytes)	Description
0x7F_FF00 – 0x7F_FF07	8	Backdoor Comparison Key Refer to Section 19.4.2.11, “Verify Backdoor Access Key Command,” and Section 19.5.1, “Unsecuring the MCU using Backdoor Key Access”
0x7F_FF08 – 0x7F_FF0B[2]	4	Reserved
0x7F_FF0C[2]	1	P-Flash Protection byte. Refer to Section 19.3.2.9, “P-Flash Protection Register (FPROT)”
0x7F_FF0D[2]	1	D-Flash Protection byte. Refer to Section 19.3.2.10, “D-Flash Protection Register (DFPROT)”
0x7F_FF0E[2]	1	Flash Nonvolatile byte Refer to Section 19.3.2.15, “Flash Option Register (FOPT)”
0x7F_FF0F[2]	1	Flash Security byte Refer to Section 19.3.2.2, “Flash Security Register (FSEC)”

[1] Older versions may have swapped protection byte addresses

[2] 0x7FF08 - 0x7F_FF0F form a Flash phrase and must be programmed in a single command write sequence. Each byte in the 0x7F_FF08 - 0x7F_FF0B reserved field should be programmed to 0xFF.

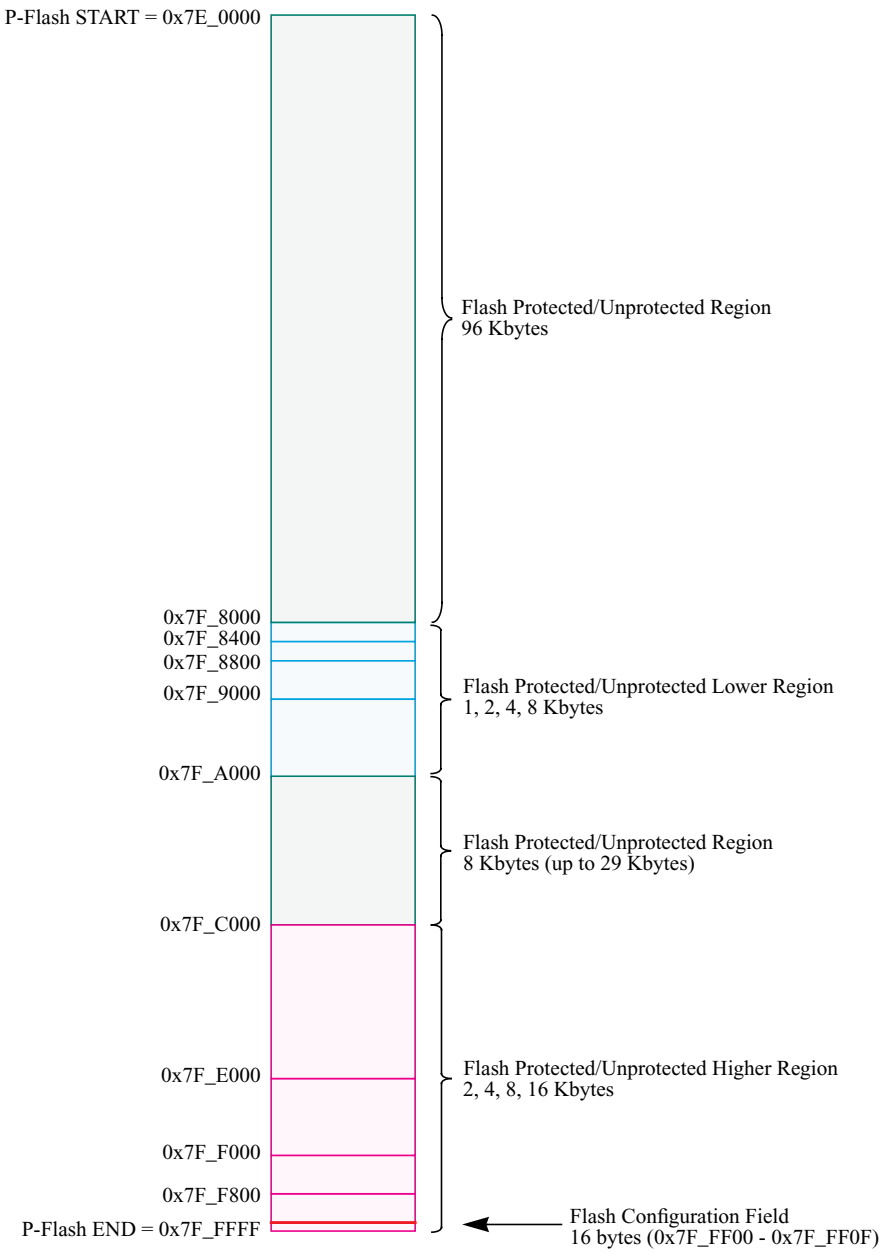

Figure 19-2. P-Flash Memory Map

Table 19-4. Program IFR Fields

Global Address (PGMIFRON)	Size (Bytes)	Field Description
0x40_0000 – 0x40_0007	8	Device ID
0x40_0008 – 0x40_00E7	224	Reserved
0x40_00E8 – 0x40_00E9	2	Version ID
0x40_00EA – 0x40_00FF	22	Reserved
0x40_0100 – 0x40_013F	64	Program Once Field Refer to Section 19.4.2.6, “Program Once Command”
0x40_0140 – 0x40_01FF	192	Reserved

Table 19-5. D-Flash and Memory Controller Resource Fields

Global Address	Size (Bytes)	Description
0x10_0000 – 0x10_1FFF	8,192	D-Flash Memory
0x10_2000 – 0x11_FFFF	122,880	Reserved
0x12_0000 – 0x12_007F	128	D-Flash Nonvolatile Information Register (DFIFRON[1] = 1)
0x12_0080 – 0x12_0FFF	3,968	Reserved
0x12_1000 – 0x12_1FFF	4,096	Reserved
0x12_2000 – 0x12_3CFF	7,242	Reserved
0x12_3D00 – 0x12_3FFF	768	Memory Controller Scratch RAM (MGRAMON[1] = 1)
0x12_4000 – 0x12_E7FF	43,008	Reserved
0x12_E800 – 0x12_FFFF	6,144	Reserved
0x13_0000 – 0x13_FFFF	65,536	Reserved

[1] MMCCTL1 register bit

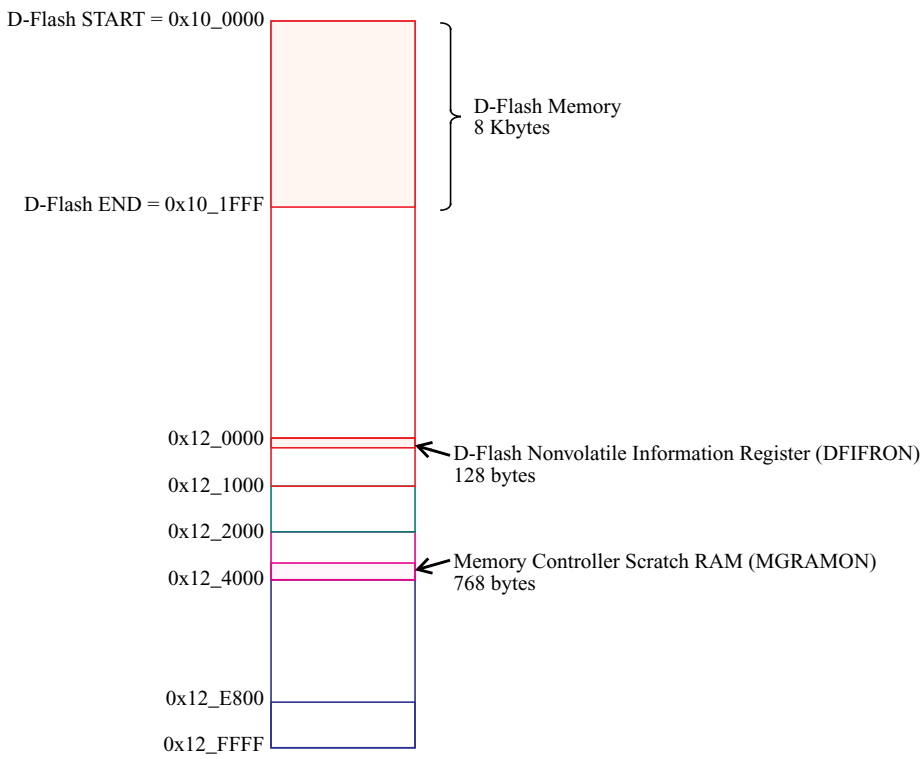

Figure 19-3. D-Flash and Memory Controller Resource Memory Map

19.3.2 Register Descriptions

The Flash module contains a set of 20 control and status registers located between Flash module base + 0x0000 and 0x0013. A summary of the Flash module registers is given in Figure 19-4 with detailed descriptions in the following subsections.

CAUTION

Writes to any Flash register must be avoided while a Flash command is active (CCIF=0) to prevent corruption of Flash register contents and Memory Controller behavior.

Address & Name		7	6	5	4	3	2	1	0
0x0000 FCLKDIV	R	FDIVLD	FDIV6	FDIV5	FDIV4	FDIV3	FDIV2	FDIV1	FDIV0
	W								
0x0001 FSEC	R	KEYEN1	KEYEN0	RNV5	RNV4	RNV3	RNV2	SEC1	SEC0
	W								

Figure 19-4. FTMR128K1 Register Summary

Address & Name		7	6	5	4	3	2	1	0
0x0002 FCCOBIX	R	0	0	0	0	0	CCOBIX2	CCOBIX1	CCOBIX0
	W								
0x0003 FECCRIX	R	0	0	0	0	0	ECCRIX2	ECCRIX1	ECCRIX0
	W								
0x0004 FCNFG	R	CCIE	0	0	IGNSF	0	0	FDFD	FSFD
	W								
0x0005 FERCNFG	R			0				DFDIE	SFDIE
	W								
0x0006 FSTAT	R	CCIF	0	ACCERR	FPVIOL	MGBUSY	RSVD	MGSTAT1	MGSTAT0
	W								
0x0007 FERSTAT	R	0	0	0	0	0	0	DFDIF	SFDIF
	W								
0x0008 FPROT	R	FPOPEN	RNV6	FPHDIS	FPHS1	FPHS0	FPLDIS	FPLS1	FPLS0
	W								
0x0009 DFPROT	R	DPOPEN	0	0	DPS4	DPS3	DPS2	DPS1	DPS0
	W								
0x000A FCCOBHI	R	CCOB15	CCOB14	CCOB13	CCOB12	CCOB11	CCOB10	CCOB9	CCOB8
	W								
0x000B FCCOBLO	R	CCOB7	CCOB6	CCOB5	CCOB4	CCOB3	CCOB2	CCOB1	CCOB0
	W								
0x000C FRSV0	R	0	0	0	0	0	0	0	0
	W								
0x000D FRSV1	R	0	0	0	0	0	0	0	0
	W								
0x000E FECCRHI	R	ECCR15	ECCR14	ECCR13	ECCR12	ECCR11	ECCR10	ECCR9	ECCR8
	W								
0x000F FECCRLO	R	ECCR7	ECCR6	ECCR5	ECCR4	ECCR3	ECCR2	ECCR1	ECCR0
	W								

Figure 19-4. FTMR128K1 Register Summary (continued)

Address & Name		7	6	5	4	3	2	1	0
0x0010 FOPT	R	NV7	NV6	NV5	NV4	NV3	NV2	NV1	NV0
	W								
0x0011 FRSV2	R	0	0	0	0	0	0	0	0
	W								
0x0012 FRSV3	R	0	0	0	0	0	0	0	0
	W								
0x0013 FRSV4	R	0	0	0	0	0	0	0	0
	W								

= Unimplemented or Reserved

Figure 19-4. FTMR128K1 Register Summary (continued)

19.3.2.1 Flash Clock Divider Register (FCLKDIV)

The FCLKDIV register is used to control timed events in program and erase algorithms.

Offset Module Base + 0x0000

	7	6	5	4	3	2	1	0
R	FDIVLD	FDIV[6:0]						
W								
Reset	0	0	0	0	0	0	0	0

= Unimplemented or Reserved

Figure 19-5. Flash Clock Divider Register (FCLKDIV)

All bits in the FCLKDIV register are readable, bits 6–0 are write once and bit 7 is not writable.

Table 19-6. FCLKDIV Field Descriptions

Field	Description
7 FDIVLD	**Clock Divider Loaded** 0 FCLKDIV register has not been written 1 FCLKDIV register has been written since the last reset
6–0 FDIV[6:0]	**Clock Divider Bits** — FDIV[6:0] must be set to effectively divide OSCCLK down to generate an internal Flash clock, FCLK, with a target frequency of 1 MHz for use by the Flash module to control timed events during program and erase algorithms. Table 19-7 shows recommended values for FDIV[6:0] based on OSCCLK frequency. Please refer to Section 19.4.1, “Flash Command Operations,” for more information.

CAUTION

The FCLKDIV register should never be written while a Flash command is executing (CCIF=0). The FCLKDIV register is writable during the Flash reset sequence even though CCIF is clear.

Table 19-7. FDIV vs OSCCLK Frequency

OSCCLK Frequency (MHz)		FDIV[6:0]	OSCCLK Frequency (MHz)		FDIV[6:0]
MIN[1]	MAX[2]		MIN[1]	MAX[2]	
1.60	2.10	0x01	33.60	34.65	0x20
2.40	3.15	0x02	34.65	35.70	0x21
3.20	4.20	0x03	35.70	36.75	0x22
4.20	5.25	0x04	36.75	37.80	0x23
5.25	6.30	0x05	37.80	38.85	0x24
6.30	7.35	0x06	38.85	39.90	0x25
7.35	8.40	0x07	39.90	40.95	0x26
8.40	9.45	0x08	40.95	42.00	0x27
9.45	10.50	0x09	42.00	43.05	0x28
10.50	11.55	0x0A	43.05	44.10	0x29
11.55	12.60	0x0B	44.10	45.15	0x2A
12.60	13.65	0x0C	45.15	46.20	0x2B
13.65	14.70	0x0D	46.20	47.25	0x2C
14.70	15.75	0x0E	47.25	48.30	0x2D
15.75	16.80	0x0F	48.30	49.35	0x2E
16.80	17.85	0x10	49.35	50.40	0x2F
17.85	18.90	0x11			
18.90	19.95	0x12			
19.95	21.00	0x13			
21.00	22.05	0x14			
22.05	23.10	0x15			
23.10	24.15	0x16			
24.15	25.20	0x17			
25.20	26.25	0x18			
26.25	27.30	0x19			
27.30	28.35	0x1A			
28.35	29.40	0x1B			
29.40	30.45	0x1C			
30.45	31.50	0x1D			
31.50	32.55	0x1E			
32.55	33.60	0x1F			

[1] FDIV shown generates an FCLK frequency of >0.8 MHz

[2] FDIV shown generates an FCLK frequency of 1.05 MHz

19.3.2.2 Flash Security Register (FSEC)

The FSEC register holds all bits associated with the security of the MCU and Flash module.

Offset Module Base + 0x0001

	7	6	5	4	3	2	1	0
R	KEYEN[1:0]		RNV[5:2]				SEC[1:0]	
W								
Reset	F	F	F	F	F	F	F	F

= Unimplemented or Reserved

Figure 19-6. Flash Security Register (FSEC)

All bits in the FSEC register are readable but not writable.

During the reset sequence, the FSEC register is loaded with the contents of the Flash security byte in the Flash configuration field at global address 0x7F_FF0F located in P-Flash memory (see Table 19-3) as indicated by reset condition F in Figure 19-6. If a double bit fault is detected while reading the P-Flash phrase containing the Flash security byte during the reset sequence, all bits in the FSEC register will be set to leave the Flash module in a secured state with backdoor key access disabled.

Table 19-8. FSEC Field Descriptions

Field	Description
7–6 KEYEN[1:0]	**Backdoor Key Security Enable Bits** — The KEYEN[1:0] bits define the enabling of backdoor key access to the Flash module as shown in Table 19-9.
5–2 RNV[5:2}	**Reserved Nonvolatile Bits** — The RNV bits should remain in the erased state for future enhancements.
1–0 SEC[1:0]	**Flash Security Bits** — The SEC[1:0] bits define the security state of the MCU as shown in Table 19-10. If the Flash module is unsecured using backdoor key access, the SEC bits are forced to 10.

Table 19-9. Flash KEYEN States

KEYEN[1:0]	Status of Backdoor Key Access
00	DISABLED
01	DISABLED[1]
10	ENABLED
11	DISABLED

[1] Preferred KEYEN state to disable backdoor key access.

Table 19-10. Flash Security States

SEC[1:0]	Status of Security
00	SECURED
01	SECURED[1]
10	UNSECURED
11	SECURED

[1] Preferred SEC state to set MCU to secured state.

The security function in the Flash module is described in Section 19.5.

19.3.2.3 Flash CCOB Index Register (FCCOBIX)

The FCCOBIX register is used to index the FCCOB register for Flash memory operations.

Offset Module Base + 0x0002

	7	6	5	4	3	2	1	0
R	0	0	0	0	0	CCOBIX[2:0]		
W								
Reset	0	0	0	0	0	0	0	0

= Unimplemented or Reserved

Figure 19-7. FCCOB Index Register (FCCOBIX)

CCOBIX bits are readable and writable while remaining bits read 0 and are not writable.

Table 19-11. FCCOBIX Field Descriptions

Field	Description
2–0 CCOBIX[1:0]	**Common Command Register Index**— The CCOBIX bits are used to select which word of the FCCOB register array is being read or written to. See Section 19.3.2.11, "Flash Common Command Object Register (FCCOB)," for more details.

19.3.2.4 Flash ECCR Index Register (FECCRIX)

The FECCRIX register is used to index the FECCR register for ECC fault reporting.

Offset Module Base + 0x0003

	7	6	5	4	3	2	1	0
R	0	0	0	0	0	ECCRIX[2:0]		
W								
Reset	0	0	0	0	0	0	0	0

= Unimplemented or Reserved

Figure 19-8. FECCR Index Register (FECCRIX)

ECCRIX bits are readable and writable while remaining bits read 0 and are not writable.

Table 19-12. FECCRIX Field Descriptions

Field	Description
2-0 ECCRIX[2:0]	**ECC Error Register Index**— The ECCRIX bits are used to select which word of the FECCR register array is being read. See Section 19.3.2.14, "Flash ECC Error Results Register (FECCR)," for more details.

19.3.2.5 Flash Configuration Register (FCNFG)

The FCNFG register enables the Flash command complete interrupt and forces ECC faults on Flash array read access from the CPU or XGATE.

Offset Module Base + 0x0004

	7	6	5	4	3	2	1	0
R	CCIE	0	0	IGNSF	0	0	FDFD	FSFD
W								
Reset	0	0	0	0	0	0	0	0

= Unimplemented or Reserved

Figure 19-9. Flash Configuration Register (FCNFG)

CCIE, IGNSF, FDFD, and FSFD bits are readable and writable while remaining bits read 0 and are not writable.

Table 19-13. FCNFG Field Descriptions

Field	Description
7 CCIE	**Command Complete Interrupt Enable** — The CCIE bit controls interrupt generation when a Flash command has completed. 0 Command complete interrupt disabled 1 An interrupt will be requested whenever the CCIF flag in the FSTAT register is set (see Section 19.3.2.7)
4 IGNSF	**Ignore Single Bit Fault** — The IGNSF controls single bit fault reporting in the FERSTAT register (see Section 19.3.2.8). 0 All single bit faults detected during array reads are reported 1 Single bit faults detected during array reads are not reported and the single bit fault interrupt will not be generated
1 FDFD	**Force Double Bit Fault Detect** — The FDFD bit allows the user to simulate a double bit fault during Flash array read operations and check the associated interrupt routine. The FDFD bit is cleared by writing a 0 to FDFD. The FECCR registers will not be updated during the Flash array read operation with FDFD set unless an actual double bit fault is detected. 0 Flash array read operations will set the DFDIF flag in the FERSTAT register only if a double bit fault is detected 1 Any Flash array read operation will force the DFDIF flag in the FERSTAT register to be set (see Section 19.3.2.7) and an interrupt will be generated as long as the DFDIE interrupt enable in the FERCNFG register is set (see Section 19.3.2.6)
0 FSFD	**Force Single Bit Fault Detect** — The FSFD bit allows the user to simulate a single bit fault during Flash array read operations and check the associated interrupt routine. The FSFD bit is cleared by writing a 0 to FSFD. The FECCR registers will not be updated during the Flash array read operation with FSFD set unless an actual single bit fault is detected. 0 Flash array read operations will set the SFDIF flag in the FERSTAT register only if a single bit fault is detected 1 Flash array read operation will force the SFDIF flag in the FERSTAT register to be set (see Section 19.3.2.7) and an interrupt will be generated as long as the SFDIE interrupt enable in the FERCNFG register is set (see Section 19.3.2.6)

19.3.2.6 Flash Error Configuration Register (FERCNFG)

The FERCNFG register enables the Flash error interrupts for the FERSTAT flags.

Offset Module Base + 0x0005

	7	6	5	4	3	2	1	0
R			0				DFDIE	SFDIE
W								
Reset	0	0	0	0	0	0	0	0

= Unimplemented or Reserved

Figure 19-10. Flash Error Configuration Register (FERCNFG)

All assigned bits in the FERCNFG register are readable and writable.

Table 19-14. FERCNFG Field Descriptions

Field	Description
1 DFDIE	**Double Bit Fault Detect Interrupt Enable** — The DFDIE bit controls interrupt generation when a double bit fault is detected during a Flash block read operation. 0 DFDIF interrupt disabled 1 An interrupt will be requested whenever the DFDIF flag is set (see Section 19.3.2.8)
0 SFDIE	**Single Bit Fault Detect Interrupt Enable** — The SFDIE bit controls interrupt generation when a single bit fault is detected during a Flash block read operation. 0 SFDIF interrupt disabled whenever the SFDIF flag is set (see Section 19.3.2.8) 1 An interrupt will be requested whenever the SFDIF flag is set (see Section 19.3.2.8)

19.3.2.7 Flash Status Register (FSTAT)

The FSTAT register reports the operational status of the Flash module.

Offset Module Base + 0x0006

	7	6	5	4	3	2	1	0
R	CCIF	0	ACCERR	FPVIOL	MGBUSY	RSVD	MGSTAT[1:0]	
W								
Reset	1	0	0	0	0	0	0[1]	0[1]

= Unimplemented or Reserved

Figure 19-11. Flash Status Register (FSTAT)

[1] Reset value can deviate from the value shown if a double bit fault is detected during the reset sequence (see Section 19.6).

CCIF, ACCERR, and FPVIOL bits are readable and writable, MGBUSY and MGSTAT bits are readable but not writable, while remaining bits read 0 and are not writable.

Table 19-15. FSTAT Field Descriptions

Field	Description
7 CCIF	**Command Complete Interrupt Flag** — The CCIF flag indicates that a Flash command has completed. The CCIF flag is cleared by writing a 1 to CCIF to launch a command and CCIF will stay low until command completion or command violation. 0 Flash command in progress 1 Flash command has completed
5 ACCERR	**Flash Access Error Flag** — The ACCERR bit indicates an illegal access has occurred to the Flash memory caused by either a violation of the command write sequence (see Section 19.4.1.2) or issuing an illegal Flash command. While ACCERR is set, the CCIF flag cannot be cleared to launch a command. The ACCERR bit is cleared by writing a 1 to ACCERR. Writing a 0 to the ACCERR bit has no effect on ACCERR. 0 No access error detected 1 Access error detected
4 FPVIOL	**Flash Protection Violation Flag** —The FPVIOL bit indicates an attempt was made to program or erase an address in a protected area of P-Flash or D-Flash memory during a command write sequence. The FPVIOL bit is cleared by writing a 1 to FPVIOL. Writing a 0 to the FPVIOL bit has no effect on FPVIOL. While FPVIOL is set, it is not possible to launch a command or start a command write sequence. 0 No protection violation detected 1 Protection violation detected
3 MGBUSY	**Memory Controller Busy Flag** — The MGBUSY flag reflects the active state of the Memory Controller. 0 Memory Controller is idle 1 Memory Controller is busy executing a Flash command (CCIF = 0)
2 RSVD	**Reserved Bit** — This bit is reserved and always reads 0.
1–0 MGSTAT[1:0]	**Memory Controller Command Completion Status Flag** — One or more MGSTAT flag bits are set if an error is detected during execution of a Flash command or during the Flash reset sequence. See Section 19.4.2, “Flash Command Description,” and Section 19.6, “Initialization” for details.

19.3.2.8 Flash Error Status Register (FERSTAT)

The FERSTAT register reflects the error status of internal Flash operations.

Offset Module Base + 0x0007

	7	6	5	4	3	2	1	0
R	0	0	0	0	0	0	DFDIF	SFDIF
W								
Reset	0	0	0	0	0	0	0	0

= Unimplemented or Reserved

Figure 19-12. Flash Error Status Register (FERSTAT)

All flags in the FERSTAT register are readable and only writable to clear the flag.

Table 19-16. FERSTAT Field Descriptions

Field	Description
1 DFDIF	**Double Bit Fault Detect Interrupt Flag** — The setting of the DFDIF flag indicates that a double bit fault was detected in the stored parity and data bits during a Flash array read operation or that a Flash array read operation was attempted on a Flash block that was under a Flash command operation. The DFDIF flag is cleared by writing a 1 to DFDIF. Writing a 0 to DFDIF has no effect on DFDIF. 0 No double bit fault detected 1 Double bit fault detected or an invalid Flash array read operation attempted
0 SFDIF	**Single Bit Fault Detect Interrupt Flag** — With the IGNSF bit in the FCNFG register clear, the SFDIF flag indicates that a single bit fault was detected in the stored parity and data bits during a Flash array read operation or that a Flash array read operation was attempted on a Flash block that was under a Flash command operation. The SFDIF flag is cleared by writing a 1 to SFDIF. Writing a 0 to SFDIF has no effect on SFDIF. 0 No single bit fault detected 1 Single bit fault detected and corrected or an invalid Flash array read operation attempted

19.3.2.9 P-Flash Protection Register (FPROT)

The FPROT register defines which P-Flash sectors are protected against program and erase operations.

Offset Module Base + 0x0008

	7	6	5	4	3	2	1	0
R W	FPOPEN	RNV6	FPHDIS	FPHS[1:0]		FPLDIS	FPLS[1:0]	
Reset	F	F	F	F	F	F	F	F

= Unimplemented or Reserved

Figure 19-13. Flash Protection Register (FPROT)

The (unreserved) bits of the FPROT register are writable with the restriction that the size of the protected region can only be increased (see Section 19.3.2.9.1, “P-Flash Protection Restrictions,” and Table 19-21).

During the reset sequence, the FPROT register is loaded with the contents of the P-Flash protection byte in the Flash configuration field at global address 0x7F_FF0C located in P-Flash memory (see Table 19-3) as indicated by reset condition ‘F’ in Figure 19-13. To change the P-Flash protection that will be loaded during the reset sequence, the upper sector of the P-Flash memory must be unprotected, then the P-Flash protection byte must be reprogrammed. If a double bit fault is detected while reading the P-Flash phrase containing the P-Flash protection byte during the reset sequence, the FPOPEN bit will be cleared and remaining bits in the FPROT register will be set to leave the P-Flash memory fully protected.

Trying to alter data in any protected area in the P-Flash memory will result in a protection violation error and the FPVIOL bit will be set in the FSTAT register. The block erase of a P-Flash block is not possible if any of the P-Flash sectors contained in the same P-Flash block are protected.

Table 19-17. FPROT Field Descriptions

Field	Description
7 FPOPEN	**Flash Protection Operation Enable** — The FPOPEN bit determines the protection function for program or erase operations as shown in Table 19-18 for the P-Flash block. 0 When FPOPEN is clear, the FPHDIS and FPLDIS bits define unprotected address ranges as specified by the corresponding FPHS and FPLS bits 1 When FPOPEN is set, the FPHDIS and FPLDIS bits enable protection for the address range specified by the corresponding FPHS and FPLS bits
6 RNV[6]	**Reserved Nonvolatile Bit** — The RNV bit should remain in the erased state for future enhancements.
5 FPHDIS	**Flash Protection Higher Address Range Disable** — The FPHDIS bit determines whether there is a protected/unprotected area in a specific region of the P-Flash memory ending with global address 0x7F_FFFF. 0 Protection/Unprotection enabled 1 Protection/Unprotection disabled
4–3 FPHS[1:0]	**Flash Protection Higher Address Size** — The FPHS bits determine the size of the protected/unprotected area in P-Flash memory as shown inTable 19-19. The FPHS bits can only be written to while the FPHDIS bit is set.
2 FPLDIS	**Flash Protection Lower Address Range Disable** — The FPLDIS bit determines whether there is a protected/unprotected area in a specific region of the P-Flash memory beginning with global address 0x7F_8000. 0 Protection/Unprotection enabled 1 Protection/Unprotection disabled
1–0 FPLS[1:0]	**Flash Protection Lower Address Size** — The FPLS bits determine the size of the protected/unprotected area in P-Flash memory as shown in Table 19-20. The FPLS bits can only be written to while the FPLDIS bit is set.

Table 19-18. P-Flash Protection Function

FPOPEN	FPHDIS	FPLDIS	Function[1]
1	1	1	No P-Flash Protection
1	1	0	Protected Low Range
1	0	1	Protected High Range
1	0	0	Protected High and Low Ranges
0	1	1	Full P-Flash Memory Protected
0	1	0	Unprotected Low Range
0	0	1	Unprotected High Range
0	0	0	Unprotected High and Low Ranges

[1] For range sizes, refer to Table 19-19 and Table 19-20.

Table 19-19. P-Flash Protection Higher Address Range

FPHS[1:0]	Global Address Range	Protected Size
00	0x7F_F800–0x7F_FFFF	2 Kbytes
01	0x7F_F000–0x7F_FFFF	4 Kbytes
10	0x7F_E000–0x7F_FFFF	8 Kbytes
11	0x7F_C000–0x7F_FFFF	16 Kbytes

Table 19-20. P-Flash Protection Lower Address Range

FPLS[1:0]	Global Address Range	Protected Size
00	0x7F_8000–0x7F_83FF	1 Kbyte
01	0x7F_8000–0x7F_87FF	2 Kbytes
10	0x7F_8000–0x7F_8FFF	4 Kbytes
11	0x7F_8000–0x7F_9FFF	8 Kbytes

All possible P-Flash protection scenarios are shown in Figure 19-14. Although the protection scheme is loaded from the Flash memory at global address 0x7F_FF0C during the reset sequence, it can be changed by the user. The P-Flash protection scheme can be used by applications requiring reprogramming in single chip mode while providing as much protection as possible if reprogramming is not required.

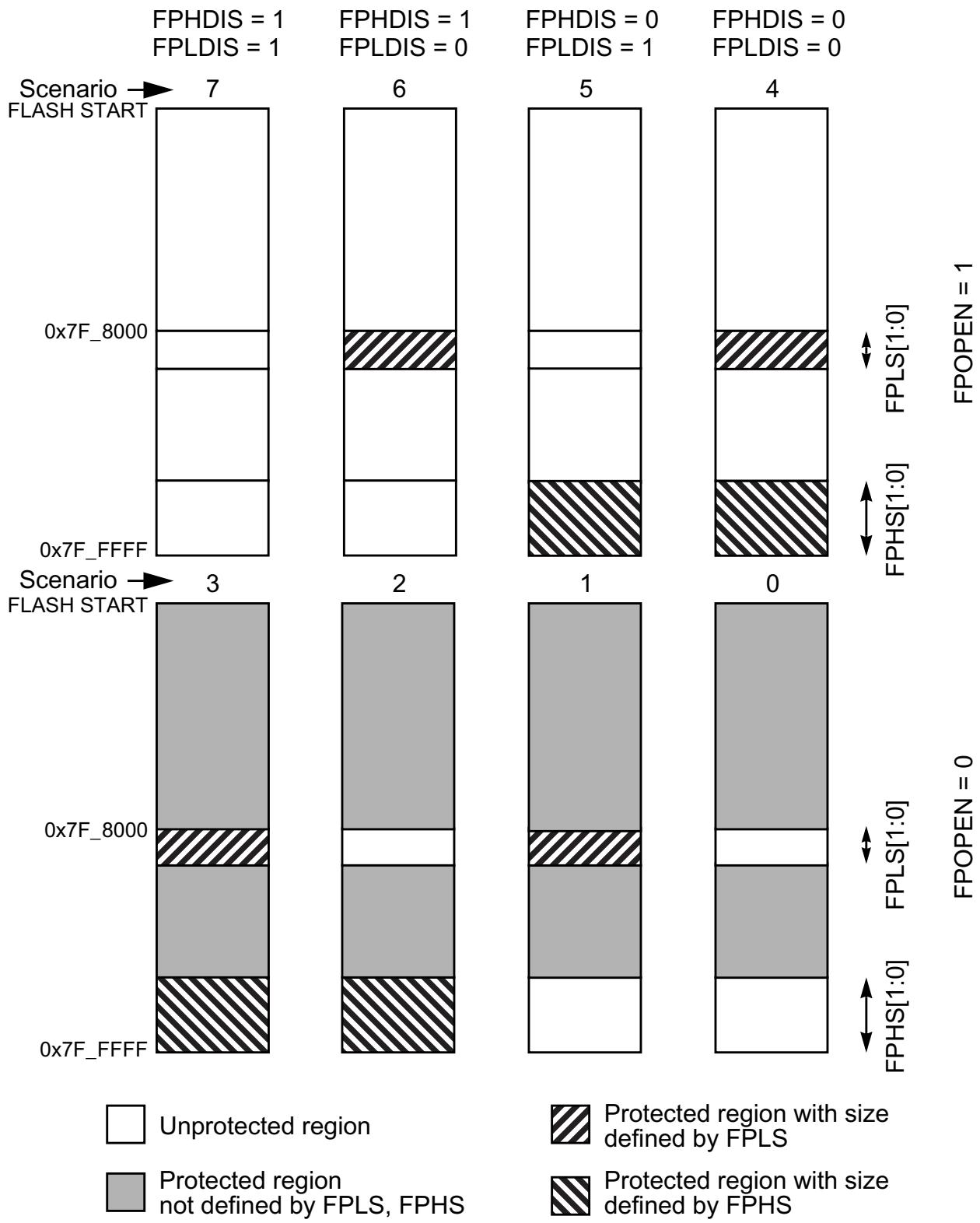

Figure 19-14. P-Flash Protection Scenarios

19.3.2.9.1 P-Flash Protection Restrictions

The general guideline is that P-Flash protection can only be added and not removed. Table 19-21 specifies all valid transitions between P-Flash protection scenarios. Any attempt to write an invalid scenario to the FPROT register will be ignored. The contents of the FPROT register reflect the active protection scenario. See the FPHS and FPLS bit descriptions for additional restrictions.

Table 19-21. P-Flash Protection Scenario Transitions

From Protection Scenario	To Protection Scenario[1]							
	0	1	2	3	4	5	6	7
0	X	X	X	X				
1		X		X				
2			X	X				
3				X				
4				X	X			
5			X	X	X	X		
6		X		X	X		X	
7	X	X	X	X	X	X	X	X

[1] Allowed transitions marked with X, see Figure 19-14 for a definition of the scenarios.

19.3.2.10 D-Flash Protection Register (DFPROT)

The DFPROT register defines which D-Flash sectors are protected against program and erase operations.

Offset Module Base + 0x0009

	7	6	5	4	3	2	1	0
R	DPOPEN	0	0	DPS[4:0]				
W								
Reset	F	0	0	F	F	F	F	F

= Unimplemented or Reserved

Figure 19-15. D-Flash Protection Register (DFPROT)

The (unreserved) bits of the DFPROT register are writable with the restriction that protection can be added but not removed. Writes must increase the DPS value and the DPOEN bit can only be written from 1 (protection disabled) to 0 (protection enabled). If the DPOPEN bit is set, the state of the DPS bits is irrelevant.

During the reset sequence, the DFPROT register is loaded with the contents of the D-Flash protection byte in the Flash configuration field at global address 0x7F_FF0D located in P-Flash memory (see Table 19-3) as indicated by reset condition F in Figure 19-15. To change the D-Flash protection that will be loaded during the reset sequence, the P-Flash sector containing the D-Flash protection byte must be unprotected, then the D-Flash protection byte must be programmed. If a double bit fault is detected while reading the

P-Flash phrase containing the D-Flash protection byte during the reset sequence, the DPOPEN bit will be cleared and DPS bits will be set to leave the D-Flash memory fully protected.

Trying to alter data in any protected area in the D-Flash memory will result in a protection violation error and the FPVIOL bit will be set in the FSTAT register. Block erase of the D-Flash memory is not possible if any of the D-Flash sectors are protected.

Table 19-22. DFPROT Field Descriptions

Field	Description
7 DPOPEN	**D-Flash Protection Control** 0 Enables D-Flash memory protection from program and erase with protected address range defined by DPS bits 1 Disables D-Flash memory protection from program and erase
4–0 DPS[4:0]	**D-Flash Protection Size** — The DPS[4:0] bits determine the size of the protected area in the D-Flash memory as shown in Table 19-23.

Table 19-23. D-Flash Protection Address Range

DPS[4:0]	Global Address Range	Protected Size
0_0000	0x10_0000 – 0x10_00FF	256 bytes
0_0001	0x10_0000 – 0x10_01FF	512 bytes
0_0010	0x10_0000 – 0x10_02FF	768 bytes
0_0011	0x10_0000 – 0x10_03FF	1024 bytes
0_0100	0x10_0000 – 0x10_04FF	1280 bytes
0_0101	0x10_0000 – 0x10_05FF	1536 bytes
0_0110	0x10_0000 – 0x10_06FF	1792 bytes
0_0111	0x10_0000 – 0x10_07FF	2048 bytes
0_1000	0x10_0000 – 0x10_08FF	2304 bytes
0_1001	0x10_0000 – 0x10_09FF	2560 bytes
0_1010	0x10_0000 – 0x10_0AFF	2816 bytes
0_1011	0x10_0000 – 0x10_0BFF	3072 bytes
0_1100	0x10_0000 – 0x10_0CFF	3328 bytes
0_1101	0x10_0000 – 0x10_0DFF	3584 bytes
0_1110	0x10_0000 – 0x10_0EFF	3840 bytes
0_1111	0x10_0000 – 0x10_0FFF	4096 bytes
1_0000	0x10_0000 – 0x10_10FF	4352 bytes
1_0001	0x10_0000 – 0x10_11FF	4608 bytes
1_0010	0x10_0000 – 0x10_12FF	4864 bytes
1_0011	0x10_0000 – 0x10_13FF	5120 bytes
1_0100	0x10_0000 – 0x10_14FF	5376 bytes
1_0101	0x10_0000 – 0x10_15FF	5632 bytes

Table 19-23. D-Flash Protection Address Range

DPS[4:0]	Global Address Range	Protected Size
1_0110	0x10_0000 – 0x10_16FF	5888 bytes
1_0111	0x10_0000 – 0x10_17FF	6144 bytes
1_1000	0x10_0000 – 0x10_18FF	6400 bytes
1_1001	0x10_0000 – 0x10_19FF	6656 bytes
1_1010	0x10_0000 – 0x10_1AFF	6912 bytes
1_1011	0x10_0000 – 0x10_1BFF	7168 bytes
1_1100	0x10_0000 – 0x10_1CFF	7424 bytes
1_1101	0x10_0000 – 0x10_1DFF	7680 bytes
1_1110	0x10_0000 – 0x10_1EFF	7936 bytes
1_1111	0x10_0000 – 0x10_1FFF	8192 bytes

19.3.2.11 Flash Common Command Object Register (FCCOB)

The FCCOB is an array of six words addressed via the CCOBIX index found in the FCCOBIX register. Byte wide reads and writes are allowed to the FCCOB register.

Offset Module Base + 0x000A

	7	6	5	4	3	2	1	0
R/W	CCOB[15:8]							
Reset	0	0	0	0	0	0	0	0

Figure 19-16. Flash Common Command Object High Register (FCCOBHI)

Offset Module Base + 0x000B

	7	6	5	4	3	2	1	0
R/W	CCOB[7:0]							
Reset	0	0	0	0	0	0	0	0

Figure 19-17. Flash Common Command Object Low Register (FCCOBLO)

19.3.2.11.1 FCCOB - NVM Command Mode

NVM command mode uses the indexed FCCOB register to provide a command code and its relevant parameters to the Memory Controller. The user first sets up all required FCCOB fields and then initiates the command's execution by writing a 1 to the CCIF bit in the FSTAT register (a 1 written by the user clears the CCIF command completion flag to 0). When the user clears the CCIF bit in the FSTAT register all FCCOB parameter fields are locked and cannot be changed by the user until the command completes

(as evidenced by the Memory Controller returning CCIF to 1). Some commands return information to the FCCOB register array.

The generic format for the FCCOB parameter fields in NVM command mode is shown in Table 19-24. The return values are available for reading after the CCIF flag in the FSTAT register has been returned to 1 by the Memory Controller. Writes to the unimplemented parameter fields (CCOBIX = 110 and CCOBIX = 111) are ignored with reads from these fields returning 0x0000.

Table 19-24 shows the generic Flash command format. The high byte of the first word in the CCOB array contains the command code, followed by the parameters for this specific Flash command. For details on the FCCOB settings required by each command, see the Flash command descriptions in Section 19.4.2.

Table 19-24. FCCOB - NVM Command Mode (Typical Usage)

CCOBIX[2:0]	Byte	FCCOB Parameter Fields (NVM Command Mode)
000	HI	FCMD[7:0] defining Flash command
	LO	0, Global address [22:16]
001	HI	Global address [15:8]
	LO	Global address [7:0]
010	HI	Data 0 [15:8]
	LO	Data 0 [7:0]
011	HI	Data 1 [15:8]
	LO	Data 1 [7:0]
100	HI	Data 2 [15:8]
	LO	Data 2 [7:0]
101	HI	Data 3 [15:8]
	LO	Data 3 [7:0]

19.3.2.12 Flash Reserved0 Register (FRSV0)

This Flash register is reserved for factory testing.

Offset Module Base + 0x000C

	7	6	5	4	3	2	1	0
R	0	0	0	0	0	0	0	0
W								
Reset	0	0	0	0	0	0	0	0

= Unimplemented or Reserved

Figure 19-18. Flash Reserved0 Register (FRSV0)

All bits in the FRSV0 register read 0 and are not writable.

19.3.2.13 Flash Reserved1 Register (FRSV1)

This Flash register is reserved for factory testing.

Offset Module Base + 0x000D

	7	6	5	4	3	2	1	0
R	0	0	0	0	0	0	0	0
W								
Reset	0	0	0	0	0	0	0	0

= Unimplemented or Reserved

Figure 19-19. Flash Reserved1 Register (FRSV1)

All bits in the FRSV1 register read 0 and are not writable.

19.3.2.14 Flash ECC Error Results Register (FECCR)

The FECCR registers contain the result of a detected ECC fault for both single bit and double bit faults. The FECCR register provides access to several ECC related fields as defined by the ECCRIX index bits in the FECCRIX register (see Section 19.3.2.4). Once ECC fault information has been stored, no other fault information will be recorded until the specific ECC fault flag has been cleared. In the event of simultaneous ECC faults the priority for fault recording is double bit fault over single bit fault.

Offset Module Base + 0x000E

	7	6	5	4	3	2	1	0
R	ECCR[15:8]							
W								
Reset	0	0	0	0	0	0	0	0

= Unimplemented or Reserved

Figure 19-20. Flash ECC Error Results High Register (FECCRHI)

Offset Module Base + 0x000F

	7	6	5	4	3	2	1	0
R	ECCR[7:0]							
W								
Reset	0	0	0	0	0	0	0	0

= Unimplemented or Reserved

Figure 19-21. Flash ECC Error Results Low Register (FECCRLO)

All FECCR bits are readable but not writable.

Table 19-25. FECCR Index Settings

ECCRIX[2:0]	FECCR Register Content		
	Bits [15:8]	**Bit[7]**	**Bits[6:0]**
000	Parity bits read from Flash block	0	Global address [22:16]
001	Global address [15:0]		
010	Data 0 [15:0]		
011	Data 1 [15:0] (P-Flash only)		
100	Data 2 [15:0] (P-Flash only)		
101	Data 3 [15:0] (P-Flash only)		
110	Not used, returns 0x0000 when read		
111	Not used, returns 0x0000 when read		

Table 19-26. FECCR Index=000 Bit Descriptions

Field	Description
15:8 PAR[7:0]	**ECC Parity Bits** — Contains the 8 parity bits from the 72 bit wide P-Flash data word or the 6 parity bits, allocated to PAR[5:0], from the 22 bit wide D-Flash word with PAR[7:6]=00.
6–0 GADDR[22:16]	**Global Address** — The GADDR[22:16] field contains the upper seven bits of the global address having caused the error.

The P-Flash word addressed by ECCRIX = 001 contains the lower 16 bits of the global address. The following four words addressed by ECCRIX = 010 to 101 contain the 64-bit wide data phrase. The four data words and the parity byte are the uncorrected data read from the P-Flash block.

The D-Flash word addressed by ECCRIX = 001 contains the lower 16 bits of the global address. The uncorrected 16-bit data word is addressed by ECCRIX = 010.

19.3.2.15 Flash Option Register (FOPT)

The FOPT register is the Flash option register.

Offset Module Base + 0x0010

	7	6	5	4	3	2	1	0
R	NV[7:0]							
W								
Reset	F	F	F	F	F	F	F	F

= Unimplemented or Reserved

Figure 19-22. Flash Option Register (FOPT)

All bits in the FOPT register are readable but are not writable.

During the reset sequence, the FOPT register is loaded from the Flash nonvolatile byte in the Flash configuration field at global address 0x7F_FF0E located in P-Flash memory (see Table 19-3) as indicated by reset condition F in Figure 19-22. If a double bit fault is detected while reading the P-Flash phrase containing the Flash nonvolatile byte during the reset sequence, all bits in the FOPT register will be set.

Table 19-27. FOPT Field Descriptions

Field	Description
7–0 NV[7:0]	**Nonvolatile Bits** — The NV[7:0] bits are available as nonvolatile bits. Refer to the device user guide for proper use of the NV bits.

19.3.2.16 Flash Reserved2 Register (FRSV2)

This Flash register is reserved for factory testing.

Offset Module Base + 0x0011

	7	6	5	4	3	2	1	0
R	0	0	0	0	0	0	0	0
W								
Reset	0	0	0	0	0	0	0	0

= Unimplemented or Reserved

Figure 19-23. Flash Reserved2 Register (FRSV2)

All bits in the FRSV2 register read 0 and are not writable.

19.3.2.17 Flash Reserved3 Register (FRSV3)

This Flash register is reserved for factory testing.

Offset Module Base + 0x0012

	7	6	5	4	3	2	1	0
R	0	0	0	0	0	0	0	0
W								
Reset	0	0	0	0	0	0	0	0

= Unimplemented or Reserved

Figure 19-24. Flash Reserved3 Register (FRSV3)

All bits in the FRSV3 register read 0 and are not writable.

19.3.2.18 Flash Reserved4 Register (FRSV4)

This Flash register is reserved for factory testing.

Offset Module Base + 0x0013

	7	6	5	4	3	2	1	0
R	0	0	0	0	0	0	0	0
W								
Reset	0	0	0	0	0	0	0	0

= Unimplemented or Reserved

Figure 19-25. Flash Reserved4 Register (FRSV4)

All bits in the FRSV4 register read 0 and are not writable.

19.4 Functional Description

19.4.1 Flash Command Operations

Flash command operations are used to modify Flash memory contents.

The next sections describe:

- How to write the FCLKDIV register that is used to generate a time base (FCLK) derived from OSCCLK for Flash program and erase command operations
- The command write sequence used to set Flash command parameters and launch execution
- Valid Flash commands available for execution

19.4.1.1 Writing the FCLKDIV Register

Prior to issuing any Flash program or erase command after a reset, the user is required to write the FCLKDIV register to divide OSCCLK down to a target FCLK of 1 MHz. Table 19-7 shows recommended values for the FDIV field based on OSCCLK frequency.

NOTE

Programming or erasing the Flash memory cannot be performed if the bus clock runs at less than 1 MHz. Setting FDIV too high can destroy the Flash memory due to overstress. Setting FDIV too low can result in incomplete programming or erasure of the Flash memory cells.

When the FCLKDIV register is written, the FDIVLD bit is set automatically. If the FDIVLD bit is 0, the FCLKDIV register has not been written since the last reset. If the FCLKDIV register has not been written, any Flash program or erase command loaded during a command write sequence will not execute and the ACCERR bit in the FSTAT register will set.

19.4.1.2 Command Write Sequence

The Memory Controller will launch all valid Flash commands entered using a command write sequence.

Before launching a command, the ACCERR and FPVIOL bits in the FSTAT register must be clear (see Section 19.3.2.7) and the CCIF flag should be tested to determine the status of the current command write sequence. If CCIF is 0, the previous command write sequence is still active, a new command write sequence cannot be started, and all writes to the FCCOB register are ignored.

CAUTION

Writes to any Flash register must be avoided while a Flash command is active (CCIF=0) to prevent corruption of Flash register contents and Memory Controller behavior.

19.4.1.2.1 Define FCCOB Contents

The FCCOB parameter fields must be loaded with all required parameters for the Flash command being executed. Access to the FCCOB parameter fields is controlled via the CCOBIX bits in the FCCOBIX register (see Section 19.3.2.3).

The contents of the FCCOB parameter fields are transferred to the Memory Controller when the user clears the CCIF command completion flag in the FSTAT register (writing 1 clears the CCIF to 0). The CCIF flag will remain clear until the Flash command has completed. Upon completion, the Memory Controller will return CCIF to 1 and the FCCOB register will be used to communicate any results. The flow for a generic command write sequence is shown in Figure 19-26.

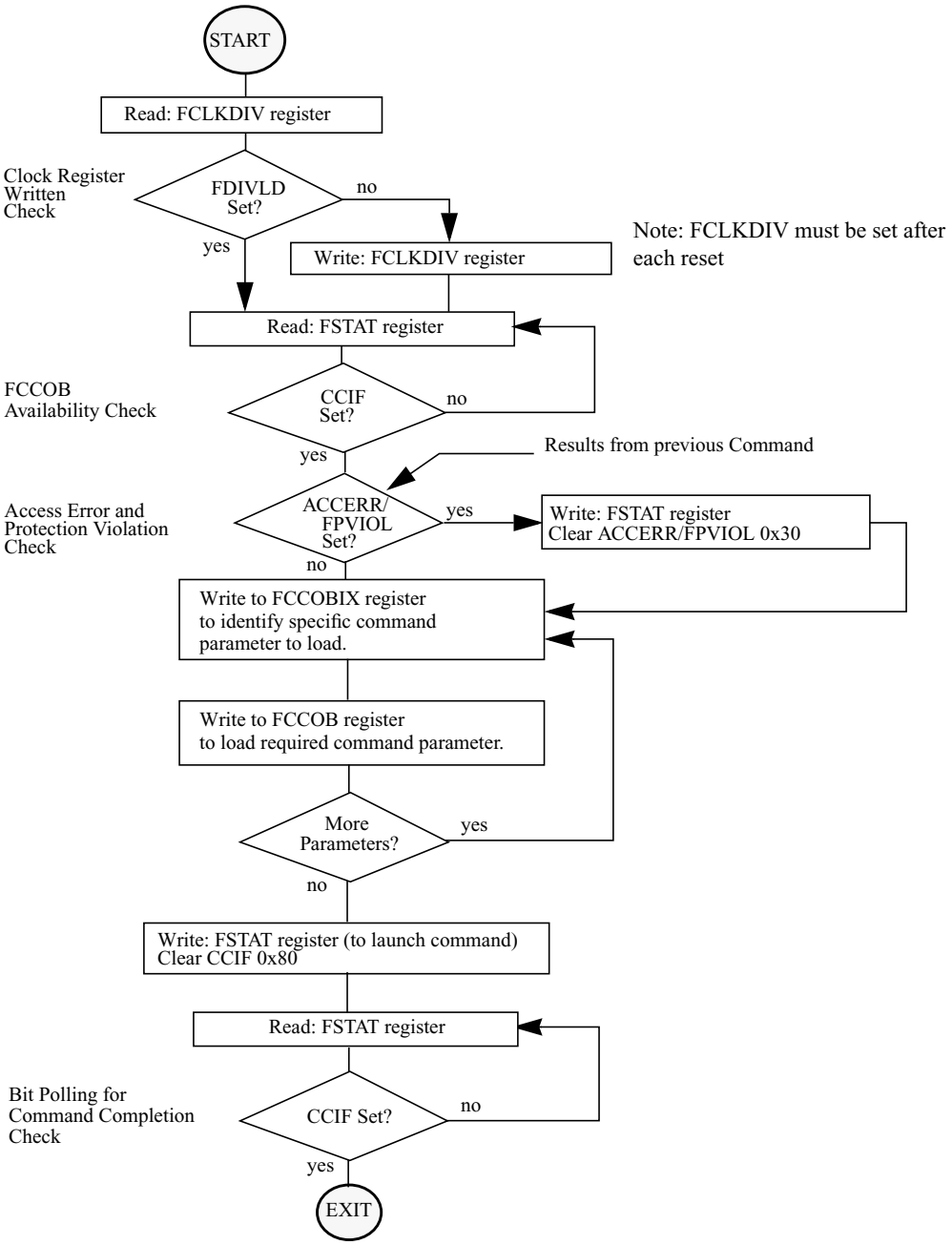

Figure 19-26. Generic Flash Command Write Sequence Flowchart

19.4.1.3 Valid Flash Module Commands

Table 19-28. Flash Commands by Mode

FCMD	Command	Unsecured				Secured			
		NS[1]	NX[2]	SS[3]	ST[4]	NS[5]	NX[6]	SS[7]	ST[8]
0x01	Erase Verify All Blocks	*	*	*	*	*	*	*	*
0x02	Erase Verify Block	*	*	*	*	*	*	*	*
0x03	Erase Verify P-Flash Section	*	*	*	*	*			
0x04	Read Once	*	*	*	*	*			
0x06	Program P-Flash	*	*	*	*	*			
0x07	Program Once	*	*	*	*	*			
0x08	Erase All Blocks			*	*			*	*
0x09	Erase Flash Block	*	*	*	*	*			
0x0A	Erase P-Flash Sector	*	*	*	*	*			
0x0B	Unsecure Flash			*	*			*	*
0x0C	Verify Backdoor Access Key	*				*			
0x0D	Set User Margin Level	*	*	*	*	*			
0x0E	Set Field Margin Level			*	*				
0x10	Erase Verify D-Flash Section	*	*	*	*	*			
0x11	Program D-Flash	*	*	*	*	*			
0x12	Erase D-Flash Sector	*	*	*	*	*			

1 Unsecured Normal Single Chip mode.
2 Unsecured Normal Expanded mode.
3 Unsecured Special Single Chip mode.
4 Unsecured Special Mode.
5 Secured Normal Single Chip mode.
6 Secured Normal Expanded mode.
7 Secured Special Single Chip mode.
8 Secured Special Mode.

19.4.1.4 P-Flash Commands

Table 19-29 summarizes the valid P-Flash commands along with the effects of the commands on the P-Flash block and other resources within the Flash module.

Table 19-29. P-Flash Commands

FCMD	Command	Function on P-Flash Memory
0x01	Erase Verify All Blocks	Verify that all P-Flash (and D-Flash) blocks are erased.
0x02	Erase Verify Block	Verify that a P-Flash block is erased.
0x03	Erase Verify P-Flash Section	Verify that a given number of words starting at the address provided are erased.
0x04	Read Once	Read a dedicated 64 byte field in the nonvolatile information register in P-Flash block 0 that was previously programmed using the Program Once command.
0x06	Program P-Flash	Program a phrase in a P-Flash block.
0x07	Program Once	Program a dedicated 64 byte field in the nonvolatile information register in P-Flash block 0 that is allowed to be programmed only once.
0x08	Erase All Blocks	Erase all P-Flash (and D-Flash) blocks. An erase of all Flash blocks is only possible when the FPLDIS, FPHDIS, and FPOPEN bits in the FPROT register and the DPOPEN bit in the DFPROT register are set prior to launching the command.
0x09	Erase Flash Block	Erase a P-Flash (or D-Flash) block. An erase of the full P-Flash block is only possible when FPLDIS, FPHDIS and FPOPEN bits in the FPROT register are set prior to launching the command.
0x0A	Erase P-Flash Sector	Erase all bytes in a P-Flash sector.
0x0B	Unsecure Flash	Supports a method of releasing MCU security by erasing all P-Flash (and D-Flash) blocks and verifying that all P-Flash (and D-Flash) blocks are erased.
0x0C	Verify Backdoor Access Key	Supports a method of releasing MCU security by verifying a set of security keys.
0x0D	Set User Margin Level	Specifies a user margin read level for all P-Flash blocks.
0x0E	Set Field Margin Level	Specifies a field margin read level for all P-Flash blocks (special modes only).

19.4.1.5 D-Flash Commands

Table 19-30 summarizes the valid D-Flash commands along with the effects of the commands on the D-Flash block.

Table 19-30. D-Flash Commands

FCMD	Command	Function on D-Flash Memory
0x01	Erase Verify All Blocks	Verify that all D-Flash (and P-Flash) blocks are erased.
0x02	Erase Verify Block	Verify that the D-Flash block is erased.
0x08	Erase All Blocks	Erase all D-Flash (and P-Flash) blocks. An erase of all Flash blocks is only possible when the FPLDIS, FPHDIS, and FPOPEN bits in the FPROT register and the DPOPEN bit in the DFPROT register are set prior to launching the command.
0x09	Erase Flash Block	Erase a D-Flash (or P-Flash) block. An erase of the full D-Flash block is only possible when DPOPEN bit in the DFPROT register is set prior to launching the command.

Table 19-30. D-Flash Commands

FCMD	Command	Function on D-Flash Memory
0x0B	Unsecure Flash	Supports a method of releasing MCU security by erasing all D-Flash (and P-Flash) blocks and verifying that all D-Flash (and P-Flash) blocks are erased.
0x0D	Set User Margin Level	Specifies a user margin read level for the D-Flash block.
0x0E	Set Field Margin Level	Specifies a field margin read level for the D-Flash block (special modes only).
0x10	Erase Verify D-Flash Section	Verify that a given number of words starting at the address provided are erased.
0x11	Program D-Flash	Program up to four words in the D-Flash block.
0x12	Erase D-Flash Sector	Erase all bytes in a sector of the D-Flash block.

19.4.2 Flash Command Description

This section provides details of all available Flash commands launched by a command write sequence. The ACCERR bit in the FSTAT register will be set during the command write sequence if any of the following illegal steps are performed, causing the command not to be processed by the Memory Controller:

- Starting any command write sequence that programs or erases Flash memory before initializing the FCLKDIV register
- Writing an invalid command as part of the command write sequence
- For additional possible errors, refer to the error handling table provided for each command

If a Flash block is read during execution of an algorithm (CCIF = 0) on that same block, the read operation will return invalid data. If the SFDIF or DFDIF flags were not previously set when the invalid read operation occurred, both the SFDIF and DFDIF flags will be set and the FECCR registers will be loaded with the global address used in the invalid read operation with the data and parity fields set to all 0.

If the ACCERR or FPVIOL bits are set in the FSTAT register, the user must clear these bits before starting any command write sequence (see Section 19.3.2.7).

CAUTION

A Flash word or phrase must be in the erased state before being programmed. Cumulative programming of bits within a Flash word or phrase is not allowed.

19.4.2.1 Erase Verify All Blocks Command

The Erase Verify All Blocks command will verify that all P-Flash and D-Flash blocks have been erased.

Table 19-31. Erase Verify All Blocks Command FCCOB Requirements

CCOBIX[2:0]	FCCOB Parameters	
000	0x01	Not required

Upon clearing CCIF to launch the Erase Verify All Blocks command, the Memory Controller will verify that the entire Flash memory space is erased. The CCIF flag will set after the Erase Verify All Blocks operation has completed.

Table 19-32. Erase Verify All Blocks Command Error Handling

Register	Error Bit	Error Condition
FSTAT	ACCERR	Set if CCOBIX[2:0] != 000 at command launch
	FPVIOL	None
	MGSTAT1	Set if any errors have been encountered during the read
	MGSTAT0	Set if any non-correctable errors have been encountered during the read

19.4.2.2 Erase Verify Block Command

The Erase Verify Block command allows the user to verify that an entire P-Flash or D-Flash block has been erased. The FCCOB upper global address bits determine which block must be verified.

Table 19-33. Erase Verify Block Command FCCOB Requirements

CCOBIX[2:0]	FCCOB Parameters	
000	0x02	Global address [22:16] of the Flash block to be verified.

Upon clearing CCIF to launch the Erase Verify Block command, the Memory Controller will verify that the selected P-Flash or D-Flash block is erased. The CCIF flag will set after the Erase Verify Block operation has completed.

Table 19-34. Erase Verify Block Command Error Handling

Register	Error Bit	Error Condition
FSTAT	ACCERR	Set if CCOBIX[2:0] != 000 at command launch
		Set if an invalid global address [22:16] is supplied
	FPVIOL	None
	MGSTAT1	Set if any errors have been encountered during the read
	MGSTAT0	Set if any non-correctable errors have been encountered during the read

19.4.2.3 Erase Verify P-Flash Section Command

The Erase Verify P-Flash Section command will verify that a section of code in the P-Flash memory is erased. The Erase Verify P-Flash Section command defines the starting point of the code to be verified and the number of phrases. The section to be verified cannot cross a 128 Kbyte boundary in the P-Flash memory space.

Table 19-35. Erase Verify P-Flash Section Command FCCOB Requirements

CCOBIX[2:0]	FCCOB Parameters	
000	0x03	Global address [22:16] of a P-Flash block
001	Global address [15:0] of the first phrase to be verified	
010	Number of phrases to be verified	

Upon clearing CCIF to launch the Erase Verify P-Flash Section command, the Memory Controller will verify the selected section of Flash memory is erased. The CCIF flag will set after the Erase Verify P-Flash Section operation has completed.

Table 19-36. Erase Verify P-Flash Section Command Error Handling

Register	Error Bit	Error Condition
FSTAT	ACCERR	Set if CCOBIX[2:0] != 010 at command launch
		Set if command not available in current mode (see Table 19-28)
		Set if an invalid global address [22:0] is supplied
		Set if a misaligned phrase address is supplied (global address [2:0] != 000)
		Set if the requested section crosses a 128 Kbyte boundary
	FPVIOL	None
	MGSTAT1	Set if any errors have been encountered during the read
	MGSTAT0	Set if any non-correctable errors have been encountered during the read

19.4.2.4 Read Once Command

The Read Once command provides read access to a reserved 64 byte field (8 phrases) located in the nonvolatile information register of P-Flash block 0. The Read Once field is programmed using the Program Once command described in Section 19.4.2.6. The Read Once command must not be executed from the Flash block containing the Program Once reserved field to avoid code runaway.

Table 19-37. Read Once Command FCCOB Requirements

CCOBIX[2:0]	FCCOB Parameters	
000	0x04	Not Required
001	Read Once phrase index (0x0000 - 0x0007)	
010	Read Once word 0 value	
011	Read Once word 1 value	
100	Read Once word 2 value	
101	Read Once word 3 value	

Upon clearing CCIF to launch the Read Once command, a Read Once phrase is fetched and stored in the FCCOB indexed register. The CCIF flag will set after the Read Once operation has completed. Valid

phrase index values for the Read Once command range from 0x0000 to 0x0007. During execution of the Read Once command, any attempt to read addresses within P-Flash block will return invalid data.

Table 19-38. Read Once Command Error Handling

Register	Error Bit	Error Condition
FSTAT	ACCERR	Set if CCOBIX[2:0] != 001 at command launch
		Set if command not available in current mode (see Table 19-28)
		Set if an invalid phrase index is supplied
	FPVIOL	None
	MGSTAT1	Set if any errors have been encountered during the read
	MGSTAT0	Set if any non-correctable errors have been encountered during the read

19.4.2.5 Program P-Flash Command

The Program P-Flash operation will program a previously erased phrase in the P-Flash memory using an embedded algorithm.

CAUTION

A P-Flash phrase must be in the erased state before being programmed. Cumulative programming of bits within a Flash phrase is not allowed.

Table 19-39. Program P-Flash Command FCCOB Requirements

CCOBIX[2:0]	FCCOB Parameters	
000	0x06	Global address [22:16] to identify P-Flash block
001	Global address [15:0] of phrase location to be programmed[1]	
010	Word 0 program value	
011	Word 1 program value	
100	Word 2 program value	
101	Word 3 program value	

[1] Global address [2:0] must be 000

Upon clearing CCIF to launch the Program P-Flash command, the Memory Controller will program the data words to the supplied global address and will then proceed to verify the data words read back as expected. The CCIF flag will set after the Program P-Flash operation has completed.

Table 19-40. Program P-Flash Command Error Handling

Register	Error Bit	Error Condition
FSTAT	ACCERR	Set if CCOBIX[2:0] != 101 at command launch
		Set if command not available in current mode (see Table 19-28)
		Set if an invalid global address [22:0] is supplied
		Set if a misaligned phrase address is supplied (global address [2:0] != 000)
	FPVIOL	Set if the global address [22:0] points to a protected area
	MGSTAT1	Set if any errors have been encountered during the verify operation
	MGSTAT0	Set if any non-correctable errors have been encountered during the verify operation

19.4.2.6 Program Once Command

The Program Once command restricts programming to a reserved 64 byte field (8 phrases) in the nonvolatile information register located in P-Flash block 0. The Program Once reserved field can be read using the Read Once command as described in Section 19.4.2.4. The Program Once command must only be issued once since the nonvolatile information register in P-Flash block 0 cannot be erased. The Program Once command must not be executed from the Flash block containing the Program Once reserved field to avoid code runaway.

Table 19-41. Program Once Command FCCOB Requirements

CCOBIX[2:0]	FCCOB Parameters	
000	0x07	Not Required
001	Program Once phrase index (0x0000 - 0x0007)	
010	Program Once word 0 value	
011	Program Once word 1 value	
100	Program Once word 2 value	
101	Program Once word 3 value	

Upon clearing CCIF to launch the Program Once command, the Memory Controller first verifies that the selected phrase is erased. If erased, then the selected phrase will be programmed and then verified with read back. The CCIF flag will remain clear, setting only after the Program Once operation has completed.

The reserved nonvolatile information register accessed by the Program Once command cannot be erased and any attempt to program one of these phrases a second time will not be allowed. Valid phrase index values for the Program Once command range from 0x0000 to 0x0007. During execution of the Program Once command, any attempt to read addresses within P-Flash block 0 will return invalid data.

Table 19-42. Program Once Command Error Handling

Register	Error Bit	Error Condition
FSTAT	ACCERR	Set if CCOBIX[2:0] != 101 at command launch
		Set if command not available in current mode (see Table 19-28)
		Set if an invalid phrase index is supplied
		Set if the requested phrase has already been programmed[1]
	FPVIOL	None
	MGSTAT1	Set if any errors have been encountered during the verify operation
	MGSTAT0	Set if any non-correctable errors have been encountered during the verify operation

[1] If a Program Once phrase is initially programmed to 0xFFFF_FFFF_FFFF_FFFF, the Program Once command will be allowed to execute again on that same phrase.

19.4.2.7 Erase All Blocks Command

The Erase All Blocks operation will erase the entire P-Flash and D-Flash memory space.

Table 19-43. Erase All Blocks Command FCCOB Requirements

CCOBIX[2:0]	FCCOB Parameters	
000	0x08	Not required

Upon clearing CCIF to launch the Erase All Blocks command, the Memory Controller will erase the entire Flash memory space and verify that it is erased. If the Memory Controller verifies that the entire Flash memory space was properly erased, security will be released. During the execution of this command (CCIF=0) the user must not write to any Flash module register. The CCIF flag will set after the Erase All Blocks operation has completed.

Table 19-44. Erase All Blocks Command Error Handling

Register	Error Bit	Error Condition
FSTAT	ACCERR	Set if CCOBIX[2:0] != 000 at command launch
		Set if command not available in current mode (see Table 19-28)
	FPVIOL	Set if any area of the P-Flash or D-Flash memory is protected
	MGSTAT1	Set if any errors have been encountered during the verify operation
	MGSTAT0	Set if any non-correctable errors have been encountered during the verify operation

19.4.2.8 Erase Flash Block Command

The Erase Flash Block operation will erase all addresses in a P-Flash or D-Flash block.

Table 19-45. Erase Flash Block Command FCCOB Requirements

CCOBIX[2:0]	FCCOB Parameters	
000	0x09	Global address [22:16] to identify Flash block
001	Global address [15:0] in Flash block to be erased	

Upon clearing CCIF to launch the Erase Flash Block command, the Memory Controller will erase the selected Flash block and verify that it is erased. The CCIF flag will set after the Erase Flash Block operation has completed.

Table 19-46. Erase Flash Block Command Error Handling

Register	Error Bit	Error Condition
FSTAT	ACCERR	Set if CCOBIX[2:0] != 001 at command launch
		Set if command not available in current mode (see Table 19-28)
		Set if an invalid global address [22:16] is supplied
		Set if the supplied P-Flash address is not phrase-aligned or if the D-Flash address is not word-aligned
	FPVIOL	Set if an area of the selected Flash block is protected
	MGSTAT1	Set if any errors have been encountered during the verify operation
	MGSTAT0	Set if any non-correctable errors have been encountered during the verify operation

19.4.2.9 Erase P-Flash Sector Command

The Erase P-Flash Sector operation will erase all addresses in a P-Flash sector.

Table 19-47. Erase P-Flash Sector Command FCCOB Requirements

CCOBIX[2:0]	FCCOB Parameters	
000	0x0A	Global address [22:16] to identify P-Flash block to be erased
001	Global address [15:0] anywhere within the sector to be erased. Refer to Section 19.1.2.1 for the P-Flash sector size.	

Upon clearing CCIF to launch the Erase P-Flash Sector command, the Memory Controller will erase the selected Flash sector and then verify that it is erased. The CCIF flag will be set after the Erase P-Flash Sector operation has completed.

Table 19-48. Erase P-Flash Sector Command Error Handling

Register	Error Bit	Error Condition
FSTAT	ACCERR	Set if CCOBIX[2:0] != 001 at command launch
		Set if command not available in current mode (see Table 19-28)
		Set if an invalid global address [22:16] is supplied
		Set if a misaligned phrase address is supplied (global address [2:0] != 000)
	FPVIOL	Set if the selected P-Flash sector is protected
	MGSTAT1	Set if any errors have been encountered during the verify operation
	MGSTAT0	Set if any non-correctable errors have been encountered during the verify operation

19.4.2.10 Unsecure Flash Command

The Unsecure Flash command will erase the entire P-Flash and D-Flash memory space and, if the erase is successful, will release security.

Table 19-49. Unsecure Flash Command FCCOB Requirements

CCOBIX[2:0]	FCCOB Parameters	
000	0x0B	Not required

Upon clearing CCIF to launch the Unsecure Flash command, the Memory Controller will erase the entire P-Flash and D-Flash memory space and verify that it is erased. If the Memory Controller verifies that the entire Flash memory space was properly erased, security will be released. If the erase verify is not successful, the Unsecure Flash operation sets MGSTAT1 and terminates without changing the security state. During the execution of this command (CCIF=0) the user must not write to any Flash module register. The CCIF flag is set after the Unsecure Flash operation has completed.

Table 19-50. Unsecure Flash Command Error Handling

Register	Error Bit	Error Condition
FSTAT	ACCERR	Set if CCOBIX[2:0] != 000 at command launch
		Set if command not available in current mode (see Table 19-28)
	FPVIOL	Set if any area of the P-Flash or D-Flash memory is protected
	MGSTAT1	Set if any errors have been encountered during the verify operation
	MGSTAT0	Set if any non-correctable errors have been encountered during the verify operation

19.4.2.11 Verify Backdoor Access Key Command

The Verify Backdoor Access Key command will only execute if it is enabled by the KEYEN bits in the FSEC register (see Table 19-9). The Verify Backdoor Access Key command releases security if user-supplied keys match those stored in the Flash security bytes of the Flash configuration field (see

Table 19-3). The Verify Backdoor Access Key command must not be executed from the Flash block containing the backdoor comparison key to avoid code runaway.

Table 19-51. Verify Backdoor Access Key Command FCCOB Requirements

CCOBIX[2:0]	FCCOB Parameters	
000	0x0C	Not required
001	Key 0	
010	Key 1	
011	Key 2	
100	Key 3	

Upon clearing CCIF to launch the Verify Backdoor Access Key command, the Memory Controller will check the FSEC KEYEN bits to verify that this command is enabled. If not enabled, the Memory Controller sets the ACCERR bit in the FSTAT register and terminates. If the command is enabled, the Memory Controller compares the key provided in FCCOB to the backdoor comparison key in the Flash configuration field with Key 0 compared to 0x7F_FF00, etc. If the backdoor keys match, security will be released. If the backdoor keys do not match, security is not released and all future attempts to execute the Verify Backdoor Access Key command are aborted (set ACCERR) until a reset occurs. The CCIF flag is set after the Verify Backdoor Access Key operation has completed.

Table 19-52. Verify Backdoor Access Key Command Error Handling

Register	Error Bit	Error Condition
FSTAT	ACCERR	Set if CCOBIX[2:0] != 100 at command launch
		Set if an incorrect backdoor key is supplied
		Set if backdoor key access has not been enabled (KEYEN[1:0] != 10, see Section 19.3.2.2)
		Set if the backdoor key has mismatched since the last reset
	FPVIOL	None
	MGSTAT1	None
	MGSTAT0	None

19.4.2.12 Set User Margin Level Command

The Set User Margin Level command causes the Memory Controller to set the margin level for future read operations of a specific P-Flash or D-Flash block.

Table 19-53. Set User Margin Level Command FCCOB Requirements

CCOBIX[2:0]	FCCOB Parameters	
000	0x0D	Global address [22:16] to identify the Flash block
001	Margin level setting	

Upon clearing CCIF to launch the Set User Margin Level command, the Memory Controller will set the user margin level for the targeted block and then set the CCIF flag.

Valid margin level settings for the Set User Margin Level command are defined in Table 19-54.

Table 19-54. Valid Set User Margin Level Settings

CCOB (CCOBIX=001)	Level Description
0x0000	Return to Normal Level
0x0001	User Margin-1 Level[1]
0x0002	User Margin-0 Level[2]

[1] Read margin to the erased state

[2] Read margin to the programmed state

Table 19-55. Set User Margin Level Command Error Handling

Register	Error Bit	Error Condition
FSTAT	ACCERR	Set if CCOBIX[2:0] != 001 at command launch
		Set if command not available in current mode (see Table 19-28)
		Set if an invalid global address [22:16] is supplied
		Set if an invalid margin level setting is supplied
	FPVIOL	None
	MGSTAT1	None
	MGSTAT0	None

NOTE

User margin levels can be used to check that Flash memory contents have adequate margin for normal level read operations. If unexpected results are encountered when checking Flash memory contents at user margin levels, a potential loss of information has been detected.

19.4.2.13 Set Field Margin Level Command

The Set Field Margin Level command, valid in special modes only, causes the Memory Controller to set the margin level specified for future read operations of a specific P-Flash or D-Flash block.

Table 19-56. Set Field Margin Level Command FCCOB Requirements

CCOBIX[2:0]	FCCOB Parameters	
000	0x0E	Global address [22:16] to identify the Flash block
001	Margin level setting	

Upon clearing CCIF to launch the Set Field Margin Level command, the Memory Controller will set the field margin level for the targeted block and then set the CCIF flag. Valid margin level settings for the Set Field Margin Level command are defined in Table 19-57.

Table 19-57. Valid Set Field Margin Level Settings

CCOB (CCOBIX=001)	Level Description
0x0000	Return to Normal Level
0x0001	User Margin-1 Level[1]
0x0002	User Margin-0 Level[2]
0x0003	Field Margin-1 Level[1]
0x0004	Field Margin-0 Level[2]

[1] Read margin to the erased state
[2] Read margin to the programmed state

Table 19-58. Set Field Margin Level Command Error Handling

Register	Error Bit	Error Condition
FSTAT	ACCERR	Set if CCOBIX[2:0] != 001 at command launch
		Set if command not available in current mode (see Table 19-28)
		Set if an invalid global address [22:16] is supplied
		Set if an invalid margin level setting is supplied
	FPVIOL	None
	MGSTAT1	None
	MGSTAT0	None

CAUTION

Field margin levels must only be used during verify of the initial factory programming.

NOTE

Field margin levels can be used to check that Flash memory contents have adequate margin for data retention at the normal level setting. If unexpected results are encountered when checking Flash memory contents at field margin levels, the Flash memory contents should be erased and reprogrammed.

19.4.2.14 Erase Verify D-Flash Section Command

The Erase Verify D-Flash Section command will verify that a section of code in the D-Flash is erased. The Erase Verify D-Flash Section command defines the starting point of the data to be verified and the number of words.

Table 19-59. Erase Verify D-Flash Section Command FCCOB Requirements

CCOBIX[2:0]	FCCOB Parameters	
000	0x10	Global address [22:16] to identify the D-Flash block
001	Global address [15:0] of the first word to be verified	
010	Number of words to be verified	

Upon clearing CCIF to launch the Erase Verify D-Flash Section command, the Memory Controller will verify the selected section of D-Flash memory is erased. The CCIF flag will set after the Erase Verify D-Flash Section operation has completed.

Table 19-60. Erase Verify D-Flash Section Command Error Handling

Register	Error Bit	Error Condition
FSTAT	ACCERR	Set if CCOBIX[2:0] != 010 at command launch
		Set if command not available in current mode (see Table 19-28)
		Set if an invalid global address [22:0] is supplied
		Set if a misaligned word address is supplied (global address [0] != 0)
		Set if the requested section breaches the end of the D-Flash block
	FPVIOL	None
	MGSTAT1	Set if any errors have been encountered during the read
	MGSTAT0	Set if any non-correctable errors have been encountered during the read

19.4.2.15 Program D-Flash Command

The Program D-Flash operation programs one to four previously erased words in the D-Flash block. The Program D-Flash operation will confirm that the targeted location(s) were successfully programmed upon completion.

CAUTION

A Flash word must be in the erased state before being programmed. Cumulative programming of bits within a Flash word is not allowed.

Table 19-61. Program D-Flash Command FCCOB Requirements

CCOBIX[2:0]	FCCOB Parameters	
000	0x11	Global address [22:16] to identify the D-Flash block
001	Global address [15:0] of word to be programmed	
010	Word 0 program value	
011	Word 1 program value, if desired	
100	Word 2 program value, if desired	

Table 19-61. Program D-Flash Command FCCOB Requirements

CCOBIX[2:0]	FCCOB Parameters
101	Word 3 program value, if desired

Upon clearing CCIF to launch the Program D-Flash command, the user-supplied words will be transferred to the Memory Controller and be programmed if the area is unprotected. The CCOBIX index value at Program D-Flash command launch determines how many words will be programmed in the D-Flash block. The CCIF flag is set when the operation has completed.

Table 19-62. Program D-Flash Command Error Handling

Register	Error Bit	Error Condition
FSTAT	ACCERR	Set if CCOBIX[2:0] < 010 at command launch
		Set if CCOBIX[2:0] > 101 at command launch
		Set if command not available in current mode (see Table 19-28)
		Set if an invalid global address [22:0] is supplied
		Set if a misaligned word address is supplied (global address [0] != 0)
		Set if the requested group of words breaches the end of the D-Flash block
	FPVIOL	Set if the selected area of the D-Flash memory is protected
	MGSTAT1	Set if any errors have been encountered during the verify operation
	MGSTAT0	Set if any non-correctable errors have been encountered during the verify operation

19.4.2.16 Erase D-Flash Sector Command

The Erase D-Flash Sector operation will erase all addresses in a sector of the D-Flash block.

Table 19-63. Erase D-Flash Sector Command FCCOB Requirements

CCOBIX[2:0]	FCCOB Parameters	
000	0x12	Global address [22:16] to identify D-Flash block
001	Global address [15:0] anywhere within the sector to be erased. See Section 19.1.2.2 for D-Flash sector size.	

Upon clearing CCIF to launch the Erase D-Flash Sector command, the Memory Controller will erase the selected Flash sector and verify that it is erased. The CCIF flag will set after the Erase D-Flash Sector operation has completed.

Table 19-64. Erase D-Flash Sector Command Error Handling

Register	Error Bit	Error Condition
FSTAT	ACCERR	Set if CCOBIX[2:0] != 001 at command launch
		Set if command not available in current mode (see Table 19-28)
		Set if an invalid global address [22:0] is supplied
		Set if a misaligned word address is supplied (global address [0] != 0)
	FPVIOL	Set if the selected area of the D-Flash memory is protected
	MGSTAT1	Set if any errors have been encountered during the verify operation
	MGSTAT0	Set if any non-correctable errors have been encountered during the verify operation

19.4.3 Interrupts

The Flash module can generate an interrupt when a Flash command operation has completed or when a Flash command operation has detected an ECC fault.

Table 19-65. Flash Interrupt Sources

Interrupt Source	Interrupt Flag	Local Enable	Global (CCR) Mask
Flash Command Complete	CCIF (FSTAT register)	CCIE (FCNFG register)	I Bit
ECC Double Bit Fault on Flash Read	DFDIF (FERSTAT register)	DFDIE (FERCNFG register)	I Bit
ECC Single Bit Fault on Flash Read	SFDIF (FERSTAT register)	SFDIE (FERCNFG register)	I Bit

NOTE

Vector addresses and their relative interrupt priority are determined at the MCU level.

19.4.3.1 Description of Flash Interrupt Operation

The Flash module uses the CCIF flag in combination with the CCIE interrupt enable bit to generate the Flash command interrupt request. The Flash module uses the DFDIF and SFDIF flags in combination with the DFDIE and SFDIE interrupt enable bits to generate the Flash error interrupt request. For a detailed description of the register bits involved, refer to Section 19.3.2.5, “Flash Configuration Register (FCNFG)”, Section 19.3.2.6, “Flash Error Configuration Register (FERCNFG)”, Section 19.3.2.7, “Flash Status Register (FSTAT)”, and Section 19.3.2.8, “Flash Error Status Register (FERSTAT)”.

The logic used for generating the Flash module interrupts is shown in Figure 19-27.

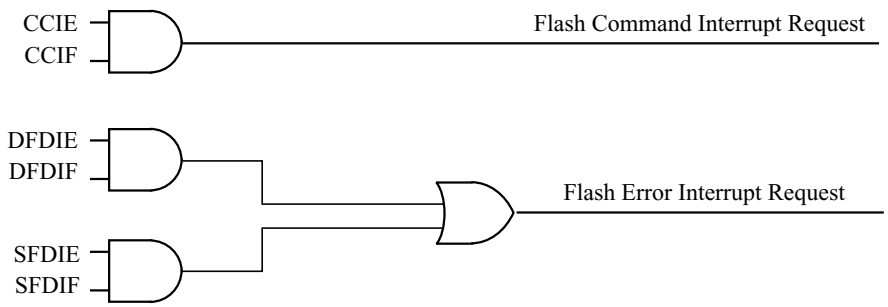

Figure 19-27. Flash Module Interrupts Implementation

19.4.4 Wait Mode

The Flash module is not affected if the MCU enters wait mode. The Flash module can recover the MCU from wait via the CCIF interrupt (see Section 19.4.3, “Interrupts”).

19.4.5 Stop Mode

If a Flash command is active (CCIF = 0) when the MCU requests stop mode, the current Flash operation will be completed before the CPU is allowed to enter stop mode.

19.5 Security

The Flash module provides security information to the MCU. The Flash security state is defined by the SEC bits of the FSEC register (see Table 19-10). During reset, the Flash module initializes the FSEC register using data read from the security byte of the Flash configuration field at global address 0x7F_FF0F.

The security state out of reset can be permanently changed by programming the security byte of the Flash configuration field. This assumes that you are starting from a mode where the necessary P-Flash erase and program commands are available and that the upper region of the P-Flash is unprotected. If the Flash security byte is successfully programmed, its new value will take affect after the next MCU reset.

The following subsections describe these security-related subjects:

- Unsecuring the MCU using Backdoor Key Access
- Unsecuring the MCU in Special Single Chip Mode using BDM
- Mode and Security Effects on Flash Command Availability

19.5.1 Unsecuring the MCU using Backdoor Key Access

The MCU may be unsecured by using the backdoor key access feature which requires knowledge of the contents of the backdoor keys (four 16-bit words programmed at addresses 0x7F_FF00–0x7F_FF07). If the KEYEN[1:0] bits are in the enabled state (see Section 19.3.2.2), the Verify Backdoor Access Key command (see Section 19.4.2.11) allows the user to present four prospective keys for comparison to the

keys stored in the Flash memory via the Memory Controller. If the keys presented in the Verify Backdoor Access Key command match the backdoor keys stored in the Flash memory, the SEC bits in the FSEC register (see Table 19-10) will be changed to unsecure the MCU. Key values of 0x0000 and 0xFFFF are not permitted as backdoor keys. While the Verify Backdoor Access Key command is active, P-Flash block 0 will not be available for read access and will return invalid data.

The user code stored in the P-Flash memory must have a method of receiving the backdoor keys from an external stimulus. This external stimulus would typically be through one of the on-chip serial ports.

If the KEYEN[1:0] bits are in the enabled state (see Section 19.3.2.2), the MCU can be unsecured by the backdoor key access sequence described below:

1. Follow the command sequence for the Verify Backdoor Access Key command as explained in Section 19.4.2.11
2. If the Verify Backdoor Access Key command is successful, the MCU is unsecured and the SEC[1:0] bits in the FSEC register are forced to the unsecure state of 10

The Verify Backdoor Access Key command is monitored by the Memory Controller and an illegal key will prohibit future use of the Verify Backdoor Access Key command. A reset of the MCU is the only method to re-enable the Verify Backdoor Access Key command.

After the backdoor keys have been correctly matched, the MCU will be unsecured. After the MCU is unsecured, the sector containing the Flash security byte can be erased and the Flash security byte can be reprogrammed to the unsecure state, if desired.

In the unsecure state, the user has full control of the contents of the backdoor keys by programming addresses 0x7F_FF00–0x7F_FF07 in the Flash configuration field.

The security as defined in the Flash security byte (0x7F_FF0F) is not changed by using the Verify Backdoor Access Key command sequence. The backdoor keys stored in addresses 0x7F_FF00–0x7F_FF07 are unaffected by the Verify Backdoor Access Key command sequence. After the next reset of the MCU, the security state of the Flash module is determined by the Flash security byte (0x7F_FF0F). The Verify Backdoor Access Key command sequence has no effect on the program and erase protections defined in the Flash protection register, FPROT.

19.5.2 Unsecuring the MCU in Special Single Chip Mode using BDM

The MCU can be unsecured in special single chip mode by erasing the P-Flash and D-Flash memory by one of the following methods:

- Reset the MCU into special single chip mode, delay while the erase test is performed by the BDM, send BDM commands to disable protection in the P-Flash and D-Flash memory, and execute the Erase All Blocks command write sequence to erase the P-Flash and D-Flash memory.
- Reset the MCU into special expanded wide mode, disable protection in the P-Flash and D-Flash memory and run code from external memory to execute the Erase All Blocks command write sequence to erase the P-Flash and D-Flash memory.

After the CCIF flag sets to indicate that the Erase All Blocks operation has completed, reset the MCU into special single chip mode. The BDM will execute the Erase Verify All Blocks command write sequence to verify that the P-Flash and D-Flash memory is erased. If the P-Flash and D-Flash memory are verified as

erased the MCU will be unsecured. All BDM commands will be enabled and the Flash security byte may be programmed to the unsecure state by the following method:

- Send BDM commands to execute a ‘Program P-Flash’ command sequence to program the Flash security byte to the unsecured state and reset the MCU.

19.5.3 Mode and Security Effects on Flash Command Availability

The availability of Flash module commands depends on the MCU operating mode and security state as shown in Table 19-28.

19.6 Initialization

On each system reset the Flash module executes a reset sequence which establishes initial values for the Flash Block Configuration Parameters, the FPROT and DFPROT protection registers, and the FOPT and FSEC registers. The Flash module reverts to built-in default values that leave the module in a fully protected and secured state if errors are encountered during execution of the reset sequence. If a double bit fault is detected during the reset sequence, both MGSTAT bits in the FSTAT register will be set.

CCIF remains clear throughout the reset sequence. The Flash module holds off all CPU access for the initial portion of the reset sequence. While Flash reads are possible when the hold is removed, writes to the FCCOBIX, FCCOBHI, and FCCOBLO registers are ignored to prevent command activity while the Memory Controller remains busy. Completion of the reset sequence is marked by setting CCIF high which enables writes to the FCCOBIX, FCCOBHI, and FCCOBLO registers to launch any available Flash command.

If a reset occurs while any Flash command is in progress, that command will be immediately aborted. The state of the word being programmed or the sector/block being erased is not guaranteed.

Chapter 20
64 KByte Flash Module (S12XFTMR64K1V1)

Table 20-1. Revision History

Revision Number	Revision Date	Sections Affected	Description of Changes
V01.04	03 Jan 2008		- Cosmetic changes
V01.05	19 Dec 2008	20.1/20-607 20.4.2.4/20-642 20.4.2.6/20-644 20.4.2.11/20-648 20.4.2.11/20-648 20.4.2.11/20-648	- Clarify single bit fault correction for P-Flash phrase - Add statement concerning code runaway when executing Read Once, Program Once, and Verify Backdoor Access Key commands from Flash block containing associated fields - Relate Key 0 to associated Backdoor Comparison Key address - Change “power down reset” to “reset” in Section 20.4.2.11
V01.06	25 Sep 2009	20.3.2/20-615 20.3.2.1/20-617 20.4.1.2/20-636 20.6/20-656	The following changes were made to clarify module behavior related to Flash register access during reset sequence and while Flash commands are active: - Add caution concerning register writes while command is active - Writes to FCLKDIV are allowed during reset sequence while CCIF is clear - Add caution concerning register writes while command is active - Writes to FCCOBIX, FCCOBHI, FCCOBLO registers are ignored during reset sequence

20.1 Introduction

The FTMR64K1 module implements the following:

- 64 Kbytes of P-Flash (Program Flash) memory
- 4 Kbytes of D-Flash (Data Flash) memory

The Flash memory is ideal for single-supply applications allowing for field reprogramming without requiring external high voltage sources for program or erase operations. The Flash module includes a memory controller that executes commands to modify Flash memory contents. The user interface to the memory controller consists of the indexed Flash Common Command Object (FCCOB) register which is written to with the command, global address, data, and any required command parameters. The memory controller must complete the execution of a command before the FCCOB register can be written to with a new command.

CAUTION

A Flash word or phrase must be in the erased state before being programmed. Cumulative programming of bits within a Flash word or phrase is not allowed.

The Flash memory may be read as bytes, aligned words, or misaligned words. Read access time is one bus cycle for bytes and aligned words, and two bus cycles for misaligned words. For Flash memory, an erased bit reads 1 and a programmed bit reads 0.

It is not possible to read from a Flash block while any command is executing on that specific Flash block. It is possible to read from a Flash block while a command is executing on a different Flash block.

Both P-Flash and D-Flash memories are implemented with Error Correction Codes (ECC) that can resolve single bit faults and detect double bit faults. For P-Flash memory, the ECC implementation requires that programming be done on an aligned 8 byte basis (a Flash phrase). Since P-Flash memory is always read by phrase, only one single bit fault in the phrase containing the byte or word accessed will be corrected.

20.1.1 Glossary

Command Write Sequence — An MCU instruction sequence to execute built-in algorithms (including program and erase) on the Flash memory.

D-Flash Memory — The D-Flash memory constitutes the nonvolatile memory store for data.

D-Flash Sector — The D-Flash sector is the smallest portion of the D-Flash memory that can be erased. The D-Flash sector consists of four 64 byte rows for a total of 256 bytes.

NVM Command Mode — An NVM mode using the CPU to setup the FCCOB register to pass parameters required for Flash command execution.

Phrase — An aligned group of four 16-bit words within the P-Flash memory. Each phrase includes eight ECC bits for single bit fault correction and double bit fault detection within the phrase.

P-Flash Memory — The P-Flash memory constitutes the main nonvolatile memory store for applications.

P-Flash Sector — The P-Flash sector is the smallest portion of the P-Flash memory that can be erased. Each P-Flash sector contains 1024 bytes.

Program IFR — Nonvolatile information register located in the P-Flash block that contains the Device ID, Version ID, and the Program Once field. The Program IFR is visible in the global memory map by setting the PGMIFRON bit in the MMCCTL1 register.

20.1.2 Features

20.1.2.1 P-Flash Features

- 64 Kbytes of P-Flash memory composed of one 64 Kbyte Flash block divided into 64 sectors of 1024 bytes
- Single bit fault correction and double bit fault detection within a 64-bit phrase during read operations

- Automated program and erase algorithm with verify and generation of ECC parity bits
- Fast sector erase and phrase program operation
- Flexible protection scheme to prevent accidental program or erase of P-Flash memory

20.1.2.2 D-Flash Features

- 4 Kbytes of D-Flash memory composed of one 4 Kbyte Flash block divided into 16 sectors of 256 bytes
- Single bit fault correction and double bit fault detection within a word during read operations
- Automated program and erase algorithm with verify and generation of ECC parity bits
- Fast sector erase and word program operation
- Protection scheme to prevent accidental program or erase of D-Flash memory
- Ability to program up to four words in a burst sequence

20.1.2.3 Other Flash Module Features

- No external high-voltage power supply required for Flash memory program and erase operations
- Interrupt generation on Flash command completion and Flash error detection
- Security mechanism to prevent unauthorized access to the Flash memory

20.1.3 Block Diagram

The block diagram of the Flash module is shown in Figure 20-1.

Figure 20-1. FTMR64K1 Block Diagram

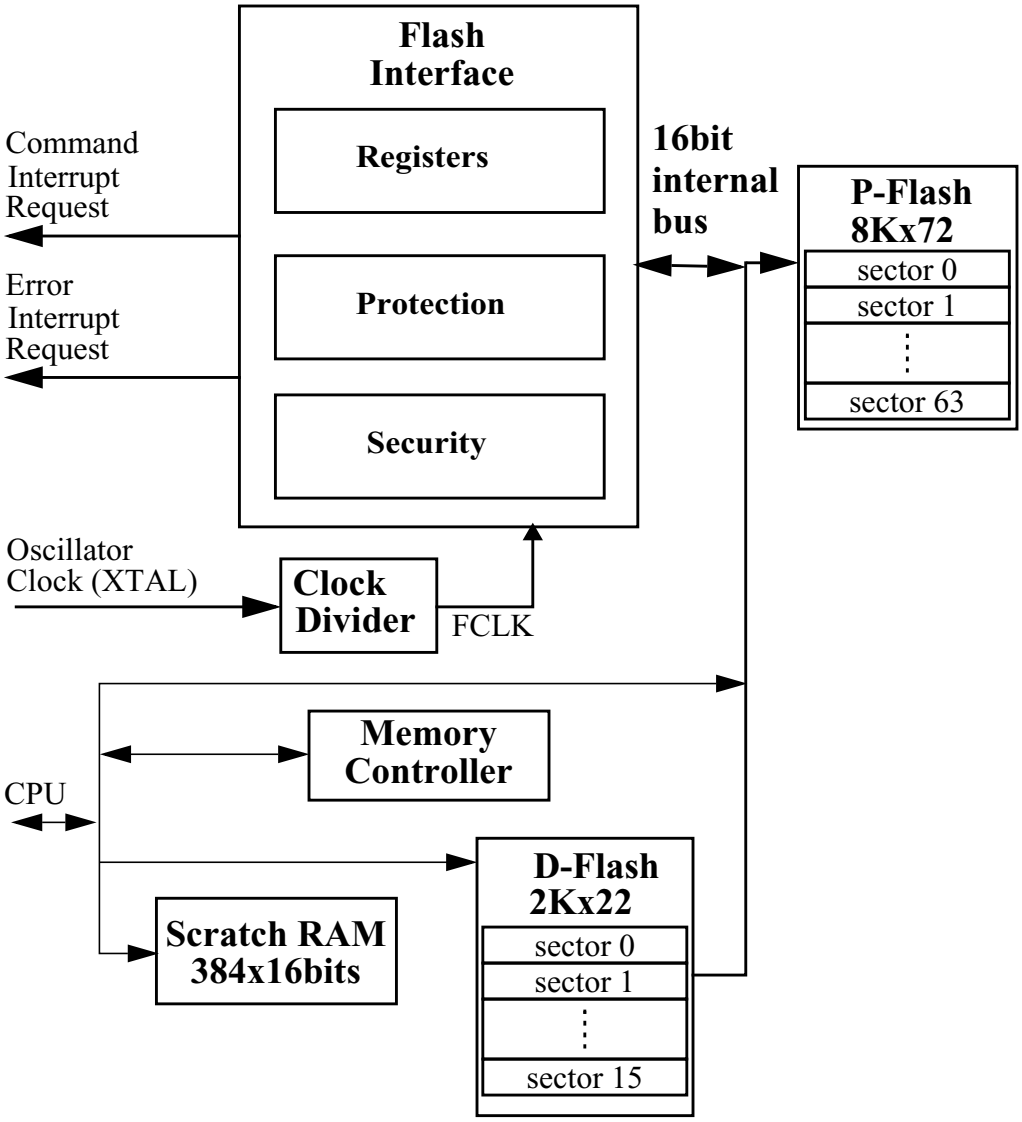

20.2 External Signal Description

The Flash module contains no signals that connect off-chip.

20.3 Memory Map and Registers

This section describes the memory map and registers for the Flash module. Read data from unimplemented memory space in the Flash module is undefined. Write access to unimplemented or reserved memory space in the Flash module will be ignored by the Flash module.

20.3.1 Module Memory Map

The S12X architecture places the P-Flash memory between global addresses 0x7F_0000 and 0x7F_FFFF as shown in Table 20-2. The P-Flash memory map is shown in Figure 20-2.

Table 20-2. P-Flash Memory Addressing

Global Address	Size (Bytes)	Description
0x7F_0000 – 0x7F_FFFF	64 K	P-Flash Block 0 Contains Flash Configuration Field (see Table 20-3)

The FPROT register, described in Section 20.3.2.9, can be set to protect regions in the Flash memory from accidental program or erase. Three separate memory regions, one growing upward from global address 0x7F_8000 in the Flash memory (called the lower region), one growing downward from global address 0x7F_FFFF in the Flash memory (called the higher region), and the remaining addresses in the Flash memory, can be activated for protection. The Flash memory addresses covered by these protectable regions are shown in the P-Flash memory map. The higher address region is mainly targeted to hold the boot loader code since it covers the vector space. Default protection settings as well as security information that allows the MCU to restrict access to the Flash module are stored in the Flash configuration field as described in Table 20-3.

Table 20-3. Flash Configuration Field[1]

Global Address	Size (Bytes)	Description
0x7F_FF00 – 0x7F_FF07	8	Backdoor Comparison Key Refer to Section 20.4.2.11, “Verify Backdoor Access Key Command,” and Section 20.5.1, “Unsecuring the MCU using Backdoor Key Access”
0x7F_FF08 – 0x7F_FF0B[2]	4	Reserved
0x7F_FF0C[2]	1	P-Flash Protection byte. Refer to Section 20.3.2.9, “P-Flash Protection Register (FPROT)”
0x7F_FF0D[2]	1	D-Flash Protection byte. Refer to Section 20.3.2.10, “D-Flash Protection Register (DFPROT)”
0x7F_FF0E[2]	1	Flash Nonvolatile byte Refer to Section 20.3.2.15, “Flash Option Register (FOPT)”
0x7F_FF0F[2]	1	Flash Security byte Refer to Section 20.3.2.2, “Flash Security Register (FSEC)”

[1] Older versions may have swapped protection byte addresses

[2] 0x7FF08 - 0x7F_FF0F form a Flash phrase and must be programmed in a single command write sequence. Each byte in the 0x7F_FF08 - 0x7F_FF0B reserved field should be programmed to 0xFF.

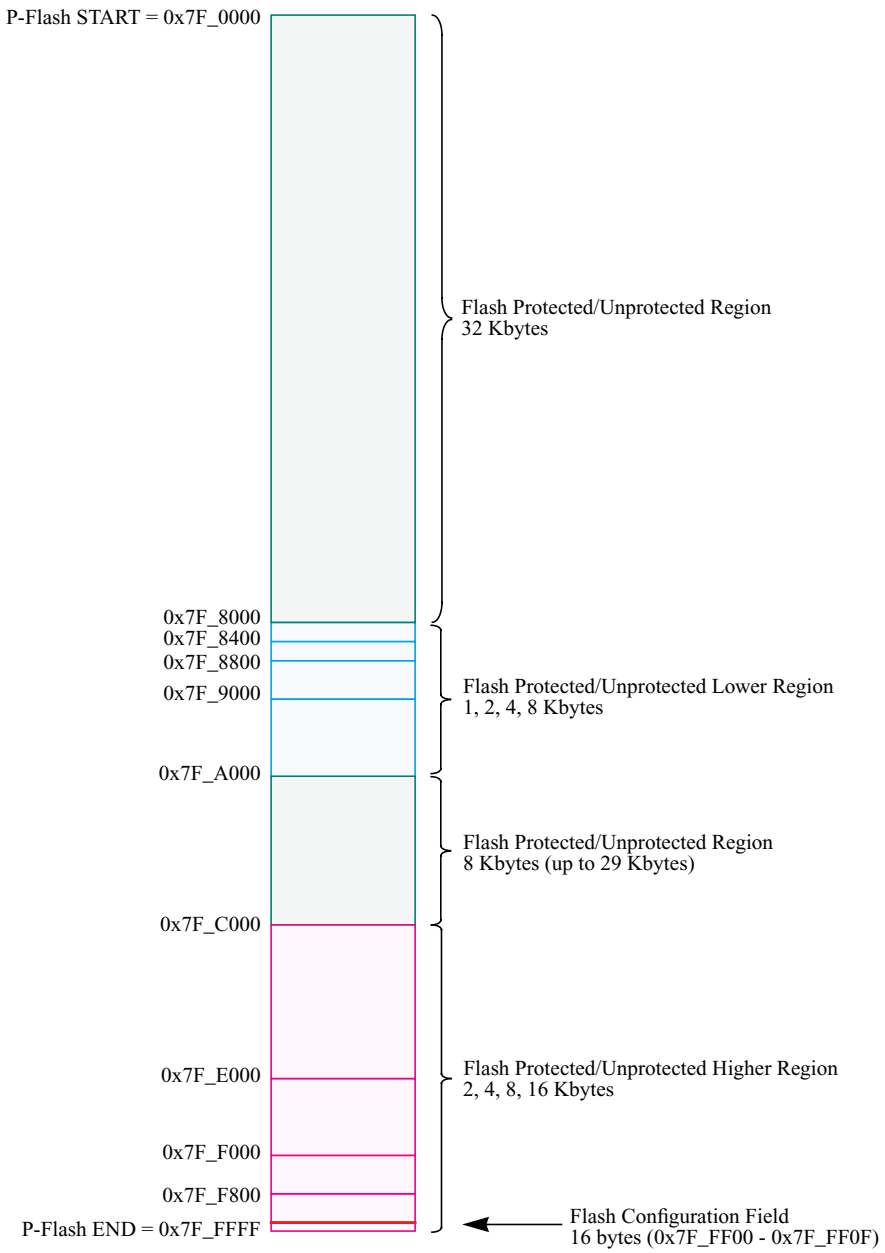

Figure 20-2. P-Flash Memory Map

Table 20-4. Program IFR Fields

Global Address (PGMIFRON)	Size (Bytes)	Field Description
0x40_0000 – 0x40_0007	8	Device ID
0x40_0008 – 0x40_00E7	224	Reserved
0x40_00E8 – 0x40_00E9	2	Version ID
0x40_00EA – 0x40_00FF	22	Reserved
0x40_0100 – 0x40_013F	64	Program Once Field Refer to Section 20.4.2.6, “Program Once Command”
0x40_0140 – 0x40_01FF	192	Reserved

Table 20-5. D-Flash and Memory Controller Resource Fields

Global Address	Size (Bytes)	Description
0x10_0000 – 0x10_0FFF	4,096	D-Flash Memory
0x10_1000 – 0x11_FFFF	126,976	Reserved
0x12_0000 – 0x12_007F	128	D-Flash Nonvolatile Information Register (DFIFRON[1] = 1)
0x12_0080 – 0x12_0FFF	3,968	Reserved
0x12_1000 – 0x12_1FFF	4,096	Reserved
0x12_2000 – 0x12_3CFF	7,242	Reserved
0x12_3D00 – 0x12_3FFF	768	Memory Controller Scratch RAM (MGRAMON[1] = 1)
0x12_4000 – 0x12_E7FF	43,008	Reserved
0x12_E800 – 0x12_FFFF	6,144	Reserved
0x13_0000 – 0x13_FFFF	65,536	Reserved

[1] MMCCTL1 register bit

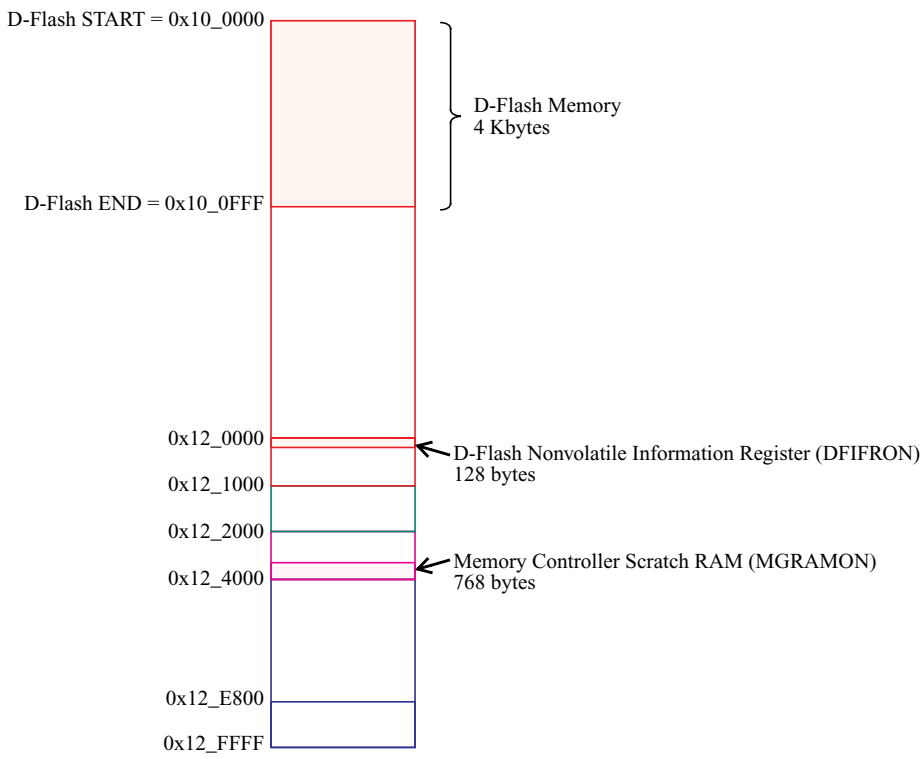

Figure 20-3. D-Flash and Memory Controller Resource Memory Map

20.3.2 Register Descriptions

The Flash module contains a set of 20 control and status registers located between Flash module base + 0x0000 and 0x0013. A summary of the Flash module registers is given in Figure 20-4 with detailed descriptions in the following subsections.

CAUTION

Writes to any Flash register must be avoided while a Flash command is active (CCIF=0) to prevent corruption of Flash register contents and Memory Controller behavior.

Address & Name		7	6	5	4	3	2	1	0
0x0000 FCLKDIV	R	FDIVLD	FDIV6	FDIV5	FDIV4	FDIV3	FDIV2	FDIV1	FDIV0
	W								
0x0001 FSEC	R	KEYEN1	KEYEN0	RNV5	RNV4	RNV3	RNV2	SEC1	SEC0
	W								

Figure 20-4. FTMR64K1 Register Summary

Address & Name		7	6	5	4	3	2	1	0
0x0002 FCCOBIX	R	0	0	0	0	0	CCOBIX2	CCOBIX1	CCOBIX0
	W								
0x0003 FECCRIX	R	0	0	0	0	0	ECCRIX2	ECCRIX1	ECCRIX0
	W								
0x0004 FCNFG	R	CCIE	0	0	IGNSF	0	0	FDFD	FSFD
	W								
0x0005 FERCNFG	R			0				DFDIE	SFDIE
	W								
0x0006 FSTAT	R	CCIF	0	ACCERR	FPVIOL	MGBUSY	RSVD	MGSTAT1	MGSTAT0
	W								
0x0007 FERSTAT	R	0	0	0	0	0	0	DFDIF	SFDIF
	W								
0x0008 FPROT	R	FPOPEN	RNV6	FPHDIS	FPHS1	FPHS0	FPLDIS	FPLS1	FPLS0
	W								
0x0009 DFPROT	R	DPOPEN	0	0	DPS4	DPS3	DPS2	DPS1	DPS0
	W								
0x000A FCCOBHI	R	CCOB15	CCOB14	CCOB13	CCOB12	CCOB11	CCOB10	CCOB9	CCOB8
	W								
0x000B FCCOBLO	R	CCOB7	CCOB6	CCOB5	CCOB4	CCOB3	CCOB2	CCOB1	CCOB0
	W								
0x000C FRSV0	R	0	0	0	0	0	0	0	0
	W								
0x000D FRSV1	R	0	0	0	0	0	0	0	0
	W								
0x000E FECCRHI	R	ECCR15	ECCR14	ECCR13	ECCR12	ECCR11	ECCR10	ECCR9	ECCR8
	W								
0x000F FECCRLO	R	ECCR7	ECCR6	ECCR5	ECCR4	ECCR3	ECCR2	ECCR1	ECCR0
	W								

Figure 20-4. FTMR64K1 Register Summary (continued)

Address & Name		7	6	5	4	3	2	1	0
0x0010 FOPT	R	NV7	NV6	NV5	NV4	NV3	NV2	NV1	NV0
	W								
0x0011 FRSV2	R	0	0	0	0	0	0	0	0
	W								
0x0012 FRSV3	R	0	0	0	0	0	0	0	0
	W								
0x0013 FRSV4	R	0	0	0	0	0	0	0	0
	W								

= Unimplemented or Reserved

Figure 20-4. FTMR64K1 Register Summary (continued)

20.3.2.1 Flash Clock Divider Register (FCLKDIV)

The FCLKDIV register is used to control timed events in program and erase algorithms.

Offset Module Base + 0x0000

	7	6	5	4	3	2	1	0
R	FDIVLD	FDIV[6:0]						
W								
Reset	0	0	0	0	0	0	0	0

= Unimplemented or Reserved

Figure 20-5. Flash Clock Divider Register (FCLKDIV)

All bits in the FCLKDIV register are readable, bits 6–0 are write once and bit 7 is not writable.

Table 20-6. FCLKDIV Field Descriptions

Field	Description
7 FDIVLD	**Clock Divider Loaded** 0 FCLKDIV register has not been written 1 FCLKDIV register has been written since the last reset
6–0 FDIV[6:0]	**Clock Divider Bits** — FDIV[6:0] must be set to effectively divide OSCCLK down to generate an internal Flash clock, FCLK, with a target frequency of 1 MHz for use by the Flash module to control timed events during program and erase algorithms. Table 20-7 shows recommended values for FDIV[6:0] based on OSCCLK frequency. Please refer to Section 20.4.1, “Flash Command Operations,” for more information.

CAUTION

The FCLKDIV register should never be written while a Flash command is executing (CCIF=0). The FCLKDIV register is writable during the Flash reset sequence even though CCIF is clear.

Table 20-7. FDIV vs OSCCLK Frequency

OSCCLK Frequency (MHz)		FDIV[6:0]	OSCCLK Frequency (MHz)		FDIV[6:0]
MIN[1]	MAX[2]		MIN[1]	MAX[2]	
1.60	2.10	0x01	33.60	34.65	0x20
2.40	3.15	0x02	34.65	35.70	0x21
3.20	4.20	0x03	35.70	36.75	0x22
4.20	5.25	0x04	36.75	37.80	0x23
5.25	6.30	0x05	37.80	38.85	0x24
6.30	7.35	0x06	38.85	39.90	0x25
7.35	8.40	0x07	39.90	40.95	0x26
8.40	9.45	0x08	40.95	42.00	0x27
9.45	10.50	0x09	42.00	43.05	0x28
10.50	11.55	0x0A	43.05	44.10	0x29
11.55	12.60	0x0B	44.10	45.15	0x2A
12.60	13.65	0x0C	45.15	46.20	0x2B
13.65	14.70	0x0D	46.20	47.25	0x2C
14.70	15.75	0x0E	47.25	48.30	0x2D
15.75	16.80	0x0F	48.30	49.35	0x2E
16.80	17.85	0x10	49.35	50.40	0x2F
17.85	18.90	0x11			
18.90	19.95	0x12			
19.95	21.00	0x13			
21.00	22.05	0x14			
22.05	23.10	0x15			
23.10	24.15	0x16			
24.15	25.20	0x17			
25.20	26.25	0x18			
26.25	27.30	0x19			
27.30	28.35	0x1A			
28.35	29.40	0x1B			
29.40	30.45	0x1C			
30.45	31.50	0x1D			
31.50	32.55	0x1E			
32.55	33.60	0x1F			

1 FDIV shown generates an FCLK frequency of >0.8 MHz

2 FDIV shown generates an FCLK frequency of 1.05 MHz

20.3.2.2 Flash Security Register (FSEC)

The FSEC register holds all bits associated with the security of the MCU and Flash module.

Offset Module Base + 0x0001

	7	6	5	4	3	2	1	0
R	KEYEN[1:0]		RNV[5:2]				SEC[1:0]	
W								
Reset	F	F	F	F	F	F	F	F

= Unimplemented or Reserved

Figure 20-6. Flash Security Register (FSEC)

All bits in the FSEC register are readable but not writable.

During the reset sequence, the FSEC register is loaded with the contents of the Flash security byte in the Flash configuration field at global address 0x7F_FF0F located in P-Flash memory (see Table 20-3) as indicated by reset condition F in Figure 20-6. If a double bit fault is detected while reading the P-Flash phrase containing the Flash security byte during the reset sequence, all bits in the FSEC register will be set to leave the Flash module in a secured state with backdoor key access disabled.

Table 20-8. FSEC Field Descriptions

Field	Description
7–6 KEYEN[1:0]	**Backdoor Key Security Enable Bits** — The KEYEN[1:0] bits define the enabling of backdoor key access to the Flash module as shown in Table 20-9.
5–2 RNV[5:2}	**Reserved Nonvolatile Bits** — The RNV bits should remain in the erased state for future enhancements.
1–0 SEC[1:0]	**Flash Security Bits** — The SEC[1:0] bits define the security state of the MCU as shown in Table 20-10. If the Flash module is unsecured using backdoor key access, the SEC bits are forced to 10.

Table 20-9. Flash KEYEN States

KEYEN[1:0]	Status of Backdoor Key Access
00	DISABLED
01	DISABLED[1]
10	ENABLED
11	DISABLED

[1] Preferred KEYEN state to disable backdoor key access.

Table 20-10. Flash Security States

SEC[1:0]	Status of Security
00	SECURED
01	SECURED[1]
10	UNSECURED
11	SECURED

[1] Preferred SEC state to set MCU to secured state.

The security function in the Flash module is described in Section 20.5.

20.3.2.3 Flash CCOB Index Register (FCCOBIX)

The FCCOBIX register is used to index the FCCOB register for Flash memory operations.

Offset Module Base + 0x0002

	7	6	5	4	3	2	1	0
R	0	0	0	0	0	CCOBIX[2:0]		
W								
Reset	0	0	0	0	0	0	0	0

= Unimplemented or Reserved

Figure 20-7. FCCOB Index Register (FCCOBIX)

CCOBIX bits are readable and writable while remaining bits read 0 and are not writable.

Table 20-11. FCCOBIX Field Descriptions

Field	Description
2–0 CCOBIX[1:0]	**Common Command Register Index**— The CCOBIX bits are used to select which word of the FCCOB register array is being read or written to. See Section 20.3.2.11, "Flash Common Command Object Register (FCCOB)," for more details.

20.3.2.4 Flash ECCR Index Register (FECCRIX)

The FECCRIX register is used to index the FECCR register for ECC fault reporting.

Offset Module Base + 0x0003

	7	6	5	4	3	2	1	0
R	0	0	0	0	0	ECCRIX[2:0]		
W								
Reset	0	0	0	0	0	0	0	0

= Unimplemented or Reserved

Figure 20-8. FECCR Index Register (FECCRIX)

ECCRIX bits are readable and writable while remaining bits read 0 and are not writable.

Table 20-12. FECCRIX Field Descriptions

Field	Description
2-0 ECCRIX[2:0]	**ECC Error Register Index**— The ECCRIX bits are used to select which word of the FECCR register array is being read. See Section 20.3.2.14, "Flash ECC Error Results Register (FECCR)," for more details.

20.3.2.5 Flash Configuration Register (FCNFG)

The FCNFG register enables the Flash command complete interrupt and forces ECC faults on Flash array read access from the CPU or XGATE.

Offset Module Base + 0x0004

	7	6	5	4	3	2	1	0
R	CCIE	0	0	IGNSF	0	0	FDFD	FSFD
W								
Reset	0	0	0	0	0	0	0	0

= Unimplemented or Reserved

Figure 20-9. Flash Configuration Register (FCNFG)

CCIE, IGNSF, FDFD, and FSFD bits are readable and writable while remaining bits read 0 and are not writable.

Table 20-13. FCNFG Field Descriptions

Field	Description
7 CCIE	**Command Complete Interrupt Enable** — The CCIE bit controls interrupt generation when a Flash command has completed. 0 Command complete interrupt disabled 1 An interrupt will be requested whenever the CCIF flag in the FSTAT register is set (see Section 20.3.2.7)
4 IGNSF	**Ignore Single Bit Fault** — The IGNSF controls single bit fault reporting in the FERSTAT register (see Section 20.3.2.8). 0 All single bit faults detected during array reads are reported 1 Single bit faults detected during array reads are not reported and the single bit fault interrupt will not be generated
1 FDFD	**Force Double Bit Fault Detect** — The FDFD bit allows the user to simulate a double bit fault during Flash array read operations and check the associated interrupt routine. The FDFD bit is cleared by writing a 0 to FDFD. The FECCR registers will not be updated during the Flash array read operation with FDFD set unless an actual double bit fault is detected. 0 Flash array read operations will set the DFDIF flag in the FERSTAT register only if a double bit fault is detected 1 Any Flash array read operation will force the DFDIF flag in the FERSTAT register to be set (see Section 20.3.2.7) and an interrupt will be generated as long as the DFDIE interrupt enable in the FERCNFG register is set (see Section 20.3.2.6)
0 FSFD	**Force Single Bit Fault Detect** — The FSFD bit allows the user to simulate a single bit fault during Flash array read operations and check the associated interrupt routine. The FSFD bit is cleared by writing a 0 to FSFD. The FECCR registers will not be updated during the Flash array read operation with FSFD set unless an actual single bit fault is detected. 0 Flash array read operations will set the SFDIF flag in the FERSTAT register only if a single bit fault is detected 1 Flash array read operation will force the SFDIF flag in the FERSTAT register to be set (see Section 20.3.2.7) and an interrupt will be generated as long as the SFDIE interrupt enable in the FERCNFG register is set (see Section 20.3.2.6)

20.3.2.6 Flash Error Configuration Register (FERCNFG)

The FERCNFG register enables the Flash error interrupts for the FERSTAT flags.

Offset Module Base + 0x0005

	7	6	5	4	3	2	1	0
R			0				DFDIE	SFDIE
W								
Reset	0	0	0	0	0	0	0	0

= Unimplemented or Reserved

Figure 20-10. Flash Error Configuration Register (FERCNFG)

All assigned bits in the FERCNFG register are readable and writable.

Table 20-14. FERCNFG Field Descriptions

Field	Description
1 DFDIE	**Double Bit Fault Detect Interrupt Enable** — The DFDIE bit controls interrupt generation when a double bit fault is detected during a Flash block read operation. 0 DFDIF interrupt disabled 1 An interrupt will be requested whenever the DFDIF flag is set (see Section 20.3.2.8)
0 SFDIE	**Single Bit Fault Detect Interrupt Enable** — The SFDIE bit controls interrupt generation when a single bit fault is detected during a Flash block read operation. 0 SFDIF interrupt disabled whenever the SFDIF flag is set (see Section 20.3.2.8) 1 An interrupt will be requested whenever the SFDIF flag is set (see Section 20.3.2.8)

20.3.2.7 Flash Status Register (FSTAT)

The FSTAT register reports the operational status of the Flash module.

Offset Module Base + 0x0006

	7	6	5	4	3	2	1	0
R	CCIF	0	ACCERR	FPVIOL	MGBUSY	RSVD	MGSTAT[1:0]	
W								
Reset	1	0	0	0	0	0	0[1]	0[1]

= Unimplemented or Reserved

Figure 20-11. Flash Status Register (FSTAT)

[1] Reset value can deviate from the value shown if a double bit fault is detected during the reset sequence (see Section 20.6).

CCIF, ACCERR, and FPVIOL bits are readable and writable, MGBUSY and MGSTAT bits are readable but not writable, while remaining bits read 0 and are not writable.

Table 20-15. FSTAT Field Descriptions

Field	Description
7 CCIF	**Command Complete Interrupt Flag** — The CCIF flag indicates that a Flash command has completed. The CCIF flag is cleared by writing a 1 to CCIF to launch a command and CCIF will stay low until command completion or command violation. 0 Flash command in progress 1 Flash command has completed
5 ACCERR	**Flash Access Error Flag** — The ACCERR bit indicates an illegal access has occurred to the Flash memory caused by either a violation of the command write sequence (see Section 20.4.1.2) or issuing an illegal Flash command. While ACCERR is set, the CCIF flag cannot be cleared to launch a command. The ACCERR bit is cleared by writing a 1 to ACCERR. Writing a 0 to the ACCERR bit has no effect on ACCERR. 0 No access error detected 1 Access error detected
4 FPVIOL	**Flash Protection Violation Flag** —The FPVIOL bit indicates an attempt was made to program or erase an address in a protected area of P-Flash or D-Flash memory during a command write sequence. The FPVIOL bit is cleared by writing a 1 to FPVIOL. Writing a 0 to the FPVIOL bit has no effect on FPVIOL. While FPVIOL is set, it is not possible to launch a command or start a command write sequence. 0 No protection violation detected 1 Protection violation detected
3 MGBUSY	**Memory Controller Busy Flag** — The MGBUSY flag reflects the active state of the Memory Controller. 0 Memory Controller is idle 1 Memory Controller is busy executing a Flash command (CCIF = 0)
2 RSVD	**Reserved Bit** — This bit is reserved and always reads 0.
1–0 MGSTAT[1:0]	**Memory Controller Command Completion Status Flag** — One or more MGSTAT flag bits are set if an error is detected during execution of a Flash command or during the Flash reset sequence. See Section 20.4.2, “Flash Command Description,” and Section 20.6, “Initialization” for details.

20.3.2.8 Flash Error Status Register (FERSTAT)

The FERSTAT register reflects the error status of internal Flash operations.

Offset Module Base + 0x0007

	7	6	5	4	3	2	1	0
R	0	0	0	0	0	0	DFDIF	SFDIF
W								
Reset	0	0	0	0	0	0	0	0

= Unimplemented or Reserved

Figure 20-12. Flash Error Status Register (FERSTAT)

All flags in the FERSTAT register are readable and only writable to clear the flag.

Table 20-16. FERSTAT Field Descriptions

Field	Description
1 DFDIF	**Double Bit Fault Detect Interrupt Flag** — The setting of the DFDIF flag indicates that a double bit fault was detected in the stored parity and data bits during a Flash array read operation or that a Flash array read operation was attempted on a Flash block that was under a Flash command operation. The DFDIF flag is cleared by writing a 1 to DFDIF. Writing a 0 to DFDIF has no effect on DFDIF. 0 No double bit fault detected 1 Double bit fault detected or an invalid Flash array read operation attempted
0 SFDIF	**Single Bit Fault Detect Interrupt Flag** — With the IGNSF bit in the FCNFG register clear, the SFDIF flag indicates that a single bit fault was detected in the stored parity and data bits during a Flash array read operation or that a Flash array read operation was attempted on a Flash block that was under a Flash command operation. The SFDIF flag is cleared by writing a 1 to SFDIF. Writing a 0 to SFDIF has no effect on SFDIF. 0 No single bit fault detected 1 Single bit fault detected and corrected or an invalid Flash array read operation attempted

20.3.2.9 P-Flash Protection Register (FPROT)

The FPROT register defines which P-Flash sectors are protected against program and erase operations.

Offset Module Base + 0x0008

	7	6	5	4	3	2	1	0
R W	FPOPEN	RNV6	FPHDIS	FPHS[1:0]		FPLDIS	FPLS[1:0]	
Reset	F	F	F	F	F	F	F	F

= Unimplemented or Reserved

Figure 20-13. Flash Protection Register (FPROT)

The (unreserved) bits of the FPROT register are writable with the restriction that the size of the protected region can only be increased (see Section 20.3.2.9.1, “P-Flash Protection Restrictions,” and Table 20-21).

During the reset sequence, the FPROT register is loaded with the contents of the P-Flash protection byte in the Flash configuration field at global address 0x7F_FF0C located in P-Flash memory (see Table 20-3) as indicated by reset condition ‘F’ in Figure 20-13. To change the P-Flash protection that will be loaded during the reset sequence, the upper sector of the P-Flash memory must be unprotected, then the P-Flash protection byte must be reprogrammed. If a double bit fault is detected while reading the P-Flash phrase containing the P-Flash protection byte during the reset sequence, the FPOPEN bit will be cleared and remaining bits in the FPROT register will be set to leave the P-Flash memory fully protected.

Trying to alter data in any protected area in the P-Flash memory will result in a protection violation error and the FPVIOL bit will be set in the FSTAT register. The block erase of a P-Flash block is not possible if any of the P-Flash sectors contained in the same P-Flash block are protected.

Table 20-17. FPROT Field Descriptions

Field	Description
7 FPOPEN	**Flash Protection Operation Enable** — The FPOPEN bit determines the protection function for program or erase operations as shown in Table 20-18 for the P-Flash block. 0 When FPOPEN is clear, the FPHDIS and FPLDIS bits define unprotected address ranges as specified by the corresponding FPHS and FPLS bits 1 When FPOPEN is set, the FPHDIS and FPLDIS bits enable protection for the address range specified by the corresponding FPHS and FPLS bits
6 RNV[6]	**Reserved Nonvolatile Bit** — The RNV bit should remain in the erased state for future enhancements.
5 FPHDIS	**Flash Protection Higher Address Range Disable** — The FPHDIS bit determines whether there is a protected/unprotected area in a specific region of the P-Flash memory ending with global address 0x7F_FFFF. 0 Protection/Unprotection enabled 1 Protection/Unprotection disabled
4–3 FPHS[1:0]	**Flash Protection Higher Address Size** — The FPHS bits determine the size of the protected/unprotected area in P-Flash memory as shown inTable 20-19. The FPHS bits can only be written to while the FPHDIS bit is set.
2 FPLDIS	**Flash Protection Lower Address Range Disable** — The FPLDIS bit determines whether there is a protected/unprotected area in a specific region of the P-Flash memory beginning with global address 0x7F_8000. 0 Protection/Unprotection enabled 1 Protection/Unprotection disabled
1–0 FPLS[1:0]	**Flash Protection Lower Address Size** — The FPLS bits determine the size of the protected/unprotected area in P-Flash memory as shown in Table 20-20. The FPLS bits can only be written to while the FPLDIS bit is set.

Table 20-18. P-Flash Protection Function

FPOPEN	FPHDIS	FPLDIS	Function[1]
1	1	1	No P-Flash Protection
1	1	0	Protected Low Range
1	0	1	Protected High Range
1	0	0	Protected High and Low Ranges
0	1	1	Full P-Flash Memory Protected
0	1	0	Unprotected Low Range
0	0	1	Unprotected High Range
0	0	0	Unprotected High and Low Ranges

[1] For range sizes, refer to Table 20-19 and Table 20-20.

Table 20-19. P-Flash Protection Higher Address Range

FPHS[1:0]	Global Address Range	Protected Size
00	0x7F_F800–0x7F_FFFF	2 Kbytes
01	0x7F_F000–0x7F_FFFF	4 Kbytes
10	0x7F_E000–0x7F_FFFF	8 Kbytes
11	0x7F_C000–0x7F_FFFF	16 Kbytes

Table 20-20. P-Flash Protection Lower Address Range

FPLS[1:0]	Global Address Range	Protected Size
00	0x7F_8000–0x7F_83FF	1 Kbyte
01	0x7F_8000–0x7F_87FF	2 Kbytes
10	0x7F_8000–0x7F_8FFF	4 Kbytes
11	0x7F_8000–0x7F_9FFF	8 Kbytes

All possible P-Flash protection scenarios are shown in Figure 20-14. Although the protection scheme is loaded from the Flash memory at global address 0x7F_FF0C during the reset sequence, it can be changed by the user. The P-Flash protection scheme can be used by applications requiring reprogramming in single chip mode while providing as much protection as possible if reprogramming is not required.

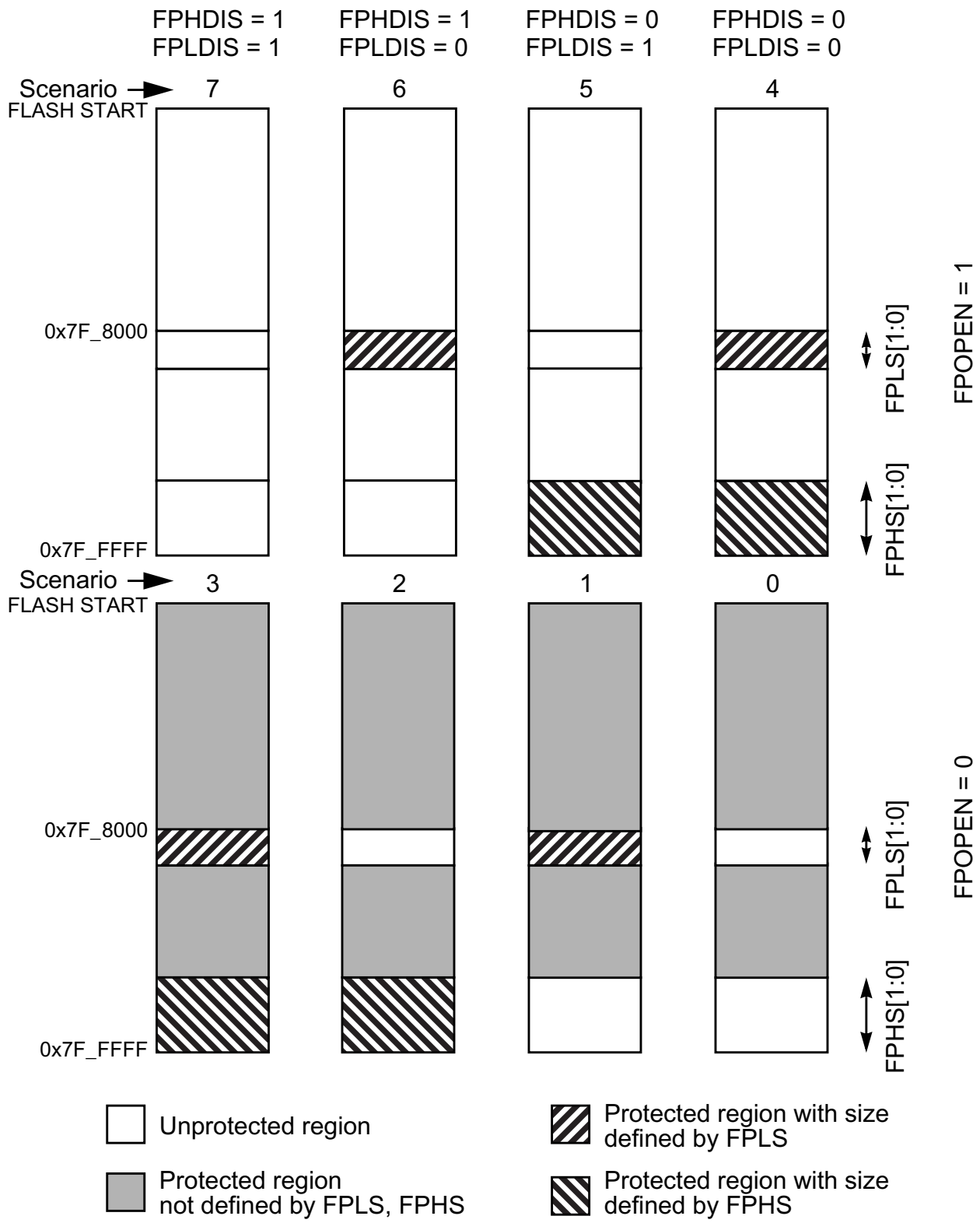

Figure 20-14. P-Flash Protection Scenarios

20.3.2.9.1 P-Flash Protection Restrictions

The general guideline is that P-Flash protection can only be added and not removed. Table 20-21 specifies all valid transitions between P-Flash protection scenarios. Any attempt to write an invalid scenario to the FPROT register will be ignored. The contents of the FPROT register reflect the active protection scenario. See the FPHS and FPLS bit descriptions for additional restrictions.

Table 20-21. P-Flash Protection Scenario Transitions

From Protection Scenario	To Protection Scenario[1]							
	0	1	2	3	4	5	6	7
0	X	X	X	X				
1		X		X				
2			X	X				
3				X				
4				X	X			
5			X	X	X	X		
6		X		X	X		X	
7	X	X	X	X	X	X	X	X

[1] Allowed transitions marked with X, see Figure 20-14 for a definition of the scenarios.

20.3.2.10 D-Flash Protection Register (DFPROT)

The DFPROT register defines which D-Flash sectors are protected against program and erase operations.

Offset Module Base + 0x0009

	7	6	5	4	3	2	1	0
R	DPOPEN	0	0	DPS[4:0]				
W								
Reset	F	0	0	F	F	F	F	F

= Unimplemented or Reserved

Figure 20-15. D-Flash Protection Register (DFPROT)

The (unreserved) bits of the DFPROT register are writable with the restriction that protection can be added but not removed. Writes must increase the DPS value and the DPOEN bit can only be written from 1 (protection disabled) to 0 (protection enabled). If the DPOPEN bit is set, the state of the DPS bits is irrelevant.

During the reset sequence, the DFPROT register is loaded with the contents of the D-Flash protection byte in the Flash configuration field at global address 0x7F_FF0D located in P-Flash memory (see Table 20-3) as indicated by reset condition F in Figure 20-15. To change the D-Flash protection that will be loaded during the reset sequence, the P-Flash sector containing the D-Flash protection byte must be unprotected, then the D-Flash protection byte must be programmed. If a double bit fault is detected while reading the

P-Flash phrase containing the D-Flash protection byte during the reset sequence, the DPOPEN bit will be cleared and DPS bits will be set to leave the D-Flash memory fully protected.

Trying to alter data in any protected area in the D-Flash memory will result in a protection violation error and the FPVIOL bit will be set in the FSTAT register. Block erase of the D-Flash memory is not possible if any of the D-Flash sectors are protected.

Table 20-22. DFPROT Field Descriptions

Field	Description
7 DPOPEN	**D-Flash Protection Control** 0 Enables D-Flash memory protection from program and erase with protected address range defined by DPS bits 1 Disables D-Flash memory protection from program and erase
4–0 DPS[4:0]	**D-Flash Protection Size** — The DPS[4:0] bits determine the size of the protected area in the D-Flash memory as shown in Table 20-23.

Table 20-23. D-Flash Protection Address Range

DPS[4:0]	Global Address Range	Protected Size
0_0000	0x10_0000 – 0x10_00FF	256 bytes
0_0001	0x10_0000 – 0x10_01FF	512 bytes
0_0010	0x10_0000 – 0x10_02FF	768 bytes
0_0011	0x10_0000 – 0x10_03FF	1024 bytes
0_0100	0x10_0000 – 0x10_04FF	1280 bytes
0_0101	0x10_0000 – 0x10_05FF	1536 bytes
0_0110	0x10_0000 – 0x10_06FF	1792 bytes
0_0111	0x10_0000 – 0x10_07FF	2048 bytes
0_1000	0x10_0000 – 0x10_08FF	2304 bytes
0_1001	0x10_0000 – 0x10_09FF	2560 bytes
0_1010	0x10_0000 – 0x10_0AFF	2816 bytes
0_1011	0x10_0000 – 0x10_0BFF	3072 bytes
0_1100	0x10_0000 – 0x10_0CFF	3328 bytes
0_1101	0x10_0000 – 0x10_0DFF	3584 bytes
0_1110	0x10_0000 – 0x10_0EFF	3840 bytes
0_1111	0x10_0000 – 0x10_0FFF	4096 bytes

20.3.2.11 Flash Common Command Object Register (FCCOB)

The FCCOB is an array of six words addressed via the CCOBIX index found in the FCCOBIX register. Byte wide reads and writes are allowed to the FCCOB register.

Offset Module Base + 0x000A

	7	6	5	4	3	2	1	0
R W	CCOB[15:8]							
Reset	0	0	0	0	0	0	0	0

Figure 20-16. Flash Common Command Object High Register (FCCOBHI)

Offset Module Base + 0x000B

	7	6	5	4	3	2	1	0
R W	CCOB[7:0]							
Reset	0	0	0	0	0	0	0	0

Figure 20-17. Flash Common Command Object Low Register (FCCOBLO)

20.3.2.11.1 FCCOB - NVM Command Mode

NVM command mode uses the indexed FCCOB register to provide a command code and its relevant parameters to the Memory Controller. The user first sets up all required FCCOB fields and then initiates the command's execution by writing a 1 to the CCIF bit in the FSTAT register (a 1 written by the user clears the CCIF command completion flag to 0). When the user clears the CCIF bit in the FSTAT register all FCCOB parameter fields are locked and cannot be changed by the user until the command completes (as evidenced by the Memory Controller returning CCIF to 1). Some commands return information to the FCCOB register array.

The generic format for the FCCOB parameter fields in NVM command mode is shown in Table 20-24. The return values are available for reading after the CCIF flag in the FSTAT register has been returned to 1 by the Memory Controller. Writes to the unimplemented parameter fields (CCOBIX = 110 and CCOBIX = 111) are ignored with reads from these fields returning 0x0000.

Table 20-24 shows the generic Flash command format. The high byte of the first word in the CCOB array contains the command code, followed by the parameters for this specific Flash command. For details on the FCCOB settings required by each command, see the Flash command descriptions in Section 20.4.2.

Table 20-24. FCCOB - NVM Command Mode (Typical Usage)

CCOBIX[2:0]	Byte	FCCOB Parameter Fields (NVM Command Mode)
000	HI	FCMD[7:0] defining Flash command
	LO	0, Global address [22:16]
001	HI	Global address [15:8]
	LO	Global address [7:0]
010	HI	Data 0 [15:8]
	LO	Data 0 [7:0]

Table 20-24. FCCOB - NVM Command Mode (Typical Usage)

CCOBIX[2:0]	Byte	FCCOB Parameter Fields (NVM Command Mode)
011	HI	Data 1 [15:8]
	LO	Data 1 [7:0]
100	HI	Data 2 [15:8]
	LO	Data 2 [7:0]
101	HI	Data 3 [15:8]
	LO	Data 3 [7:0]

20.3.2.12 Flash Reserved0 Register (FRSV0)

This Flash register is reserved for factory testing.

Offset Module Base + 0x000C

	7	6	5	4	3	2	1	0
R	0	0	0	0	0	0	0	0
W								
Reset	0	0	0	0	0	0	0	0

= Unimplemented or Reserved

Figure 20-18. Flash Reserved0 Register (FRSV0)

All bits in the FRSV0 register read 0 and are not writable.

20.3.2.13 Flash Reserved1 Register (FRSV1)

This Flash register is reserved for factory testing.

Offset Module Base + 0x000D

	7	6	5	4	3	2	1	0
R	0	0	0	0	0	0	0	0
W								
Reset	0	0	0	0	0	0	0	0

= Unimplemented or Reserved

Figure 20-19. Flash Reserved1 Register (FRSV1)

All bits in the FRSV1 register read 0 and are not writable.

20.3.2.14 Flash ECC Error Results Register (FECCR)

The FECCR registers contain the result of a detected ECC fault for both single bit and double bit faults. The FECCR register provides access to several ECC related fields as defined by the ECCRIX index bits in the FECCRIX register (see Section 20.3.2.4). Once ECC fault information has been stored, no other

fault information will be recorded until the specific ECC fault flag has been cleared. In the event of simultaneous ECC faults the priority for fault recording is double bit fault over single bit fault.

Offset Module Base + 0x000E

	7	6	5	4	3	2	1	0
R	ECCR[15:8]							
W								
Reset	0	0	0	0	0	0	0	0

= Unimplemented or Reserved

Figure 20-20. Flash ECC Error Results High Register (FECCRHI)

Offset Module Base + 0x000F

	7	6	5	4	3	2	1	0
R	ECCR[7:0]							
W								
Reset	0	0	0	0	0	0	0	0

= Unimplemented or Reserved

Figure 20-21. Flash ECC Error Results Low Register (FECCRLO)

All FECCR bits are readable but not writable.

Table 20-25. FECCR Index Settings

ECCRIX[2:0]	FECCR Register Content		
	Bits [15:8]	**Bit[7]**	**Bits[6:0]**
000	Parity bits read from Flash block	0	Global address [22:16]
001	Global address [15:0]		
010	Data 0 [15:0]		
011	Data 1 [15:0] (P-Flash only)		
100	Data 2 [15:0] (P-Flash only)		
101	Data 3 [15:0] (P-Flash only)		
110	Not used, returns 0x0000 when read		
111	Not used, returns 0x0000 when read		

Table 20-26. FECCR Index=000 Bit Descriptions

Field	Description
15:8 PAR[7:0]	**ECC Parity Bits** — Contains the 8 parity bits from the 72 bit wide P-Flash data word or the 6 parity bits, allocated to PAR[5:0], from the 22 bit wide D-Flash word with PAR[7:6]=00.
6–0 GADDR[22:16]	**Global Address** — The GADDR[22:16] field contains the upper seven bits of the global address having caused the error.

The P-Flash word addressed by ECCRIX = 001 contains the lower 16 bits of the global address. The following four words addressed by ECCRIX = 010 to 101 contain the 64-bit wide data phrase. The four data words and the parity byte are the uncorrected data read from the P-Flash block.

The D-Flash word addressed by ECCRIX = 001 contains the lower 16 bits of the global address. The uncorrected 16-bit data word is addressed by ECCRIX = 010.

20.3.2.15 Flash Option Register (FOPT)

The FOPT register is the Flash option register.

Offset Module Base + 0x0010

	7	6	5	4	3	2	1	0
R	NV[7:0]							
W								
Reset	F	F	F	F	F	F	F	F

= Unimplemented or Reserved

Figure 20-22. Flash Option Register (FOPT)

All bits in the FOPT register are readable but are not writable.

During the reset sequence, the FOPT register is loaded from the Flash nonvolatile byte in the Flash configuration field at global address 0x7F_FF0E located in P-Flash memory (see Table 20-3) as indicated by reset condition F in Figure 20-22. If a double bit fault is detected while reading the P-Flash phrase containing the Flash nonvolatile byte during the reset sequence, all bits in the FOPT register will be set.

Table 20-27. FOPT Field Descriptions

Field	Description
7–0 NV[7:0]	**Nonvolatile Bits** — The NV[7:0] bits are available as nonvolatile bits. Refer to the device user guide for proper use of the NV bits.

20.3.2.16 Flash Reserved2 Register (FRSV2)

This Flash register is reserved for factory testing.

Offset Module Base + 0x0011

	7	6	5	4	3	2	1	0
R	0	0	0	0	0	0	0	0
W								
Reset	0	0	0	0	0	0	0	0

= Unimplemented or Reserved

Figure 20-23. Flash Reserved2 Register (FRSV2)

All bits in the FRSV2 register read 0 and are not writable.

20.3.2.17 Flash Reserved3 Register (FRSV3)

This Flash register is reserved for factory testing.

Offset Module Base + 0x0012

	7	6	5	4	3	2	1	0
R	0	0	0	0	0	0	0	0
W								
Reset	0	0	0	0	0	0	0	0

= Unimplemented or Reserved

Figure 20-24. Flash Reserved3 Register (FRSV3)

All bits in the FRSV3 register read 0 and are not writable.

20.3.2.18 Flash Reserved4 Register (FRSV4)

This Flash register is reserved for factory testing.

Offset Module Base + 0x0013

	7	6	5	4	3	2	1	0
R	0	0	0	0	0	0	0	0
W								
Reset	0	0	0	0	0	0	0	0

= Unimplemented or Reserved

Figure 20-25. Flash Reserved4 Register (FRSV4)

All bits in the FRSV4 register read 0 and are not writable.

20.4 Functional Description

20.4.1 Flash Command Operations

Flash command operations are used to modify Flash memory contents.

The next sections describe:

- How to write the FCLKDIV register that is used to generate a time base (FCLK) derived from OSCCLK for Flash program and erase command operations
- The command write sequence used to set Flash command parameters and launch execution
- Valid Flash commands available for execution

20.4.1.1 Writing the FCLKDIV Register

Prior to issuing any Flash program or erase command after a reset, the user is required to write the FCLKDIV register to divide OSCCLK down to a target FCLK of 1 MHz. Table 20-7 shows recommended values for the FDIV field based on OSCCLK frequency.

NOTE

Programming or erasing the Flash memory cannot be performed if the bus clock runs at less than 1 MHz. Setting FDIV too high can destroy the Flash memory due to overstress. Setting FDIV too low can result in incomplete programming or erasure of the Flash memory cells.

When the FCLKDIV register is written, the FDIVLD bit is set automatically. If the FDIVLD bit is 0, the FCLKDIV register has not been written since the last reset. If the FCLKDIV register has not been written, any Flash program or erase command loaded during a command write sequence will not execute and the ACCERR bit in the FSTAT register will set.

20.4.1.2 Command Write Sequence

The Memory Controller will launch all valid Flash commands entered using a command write sequence.

Before launching a command, the ACCERR and FPVIOL bits in the FSTAT register must be clear (see Section 20.3.2.7) and the CCIF flag should be tested to determine the status of the current command write sequence. If CCIF is 0, the previous command write sequence is still active, a new command write sequence cannot be started, and all writes to the FCCOB register are ignored.

CAUTION

Writes to any Flash register must be avoided while a Flash command is active (CCIF=0) to prevent corruption of Flash register contents and Memory Controller behavior.

20.4.1.2.1 Define FCCOB Contents

The FCCOB parameter fields must be loaded with all required parameters for the Flash command being executed. Access to the FCCOB parameter fields is controlled via the CCOBIX bits in the FCCOBIX register (see Section 20.3.2.3).

The contents of the FCCOB parameter fields are transferred to the Memory Controller when the user clears the CCIF command completion flag in the FSTAT register (writing 1 clears the CCIF to 0). The CCIF flag will remain clear until the Flash command has completed. Upon completion, the Memory Controller will return CCIF to 1 and the FCCOB register will be used to communicate any results. The flow for a generic command write sequence is shown in Figure 20-26.

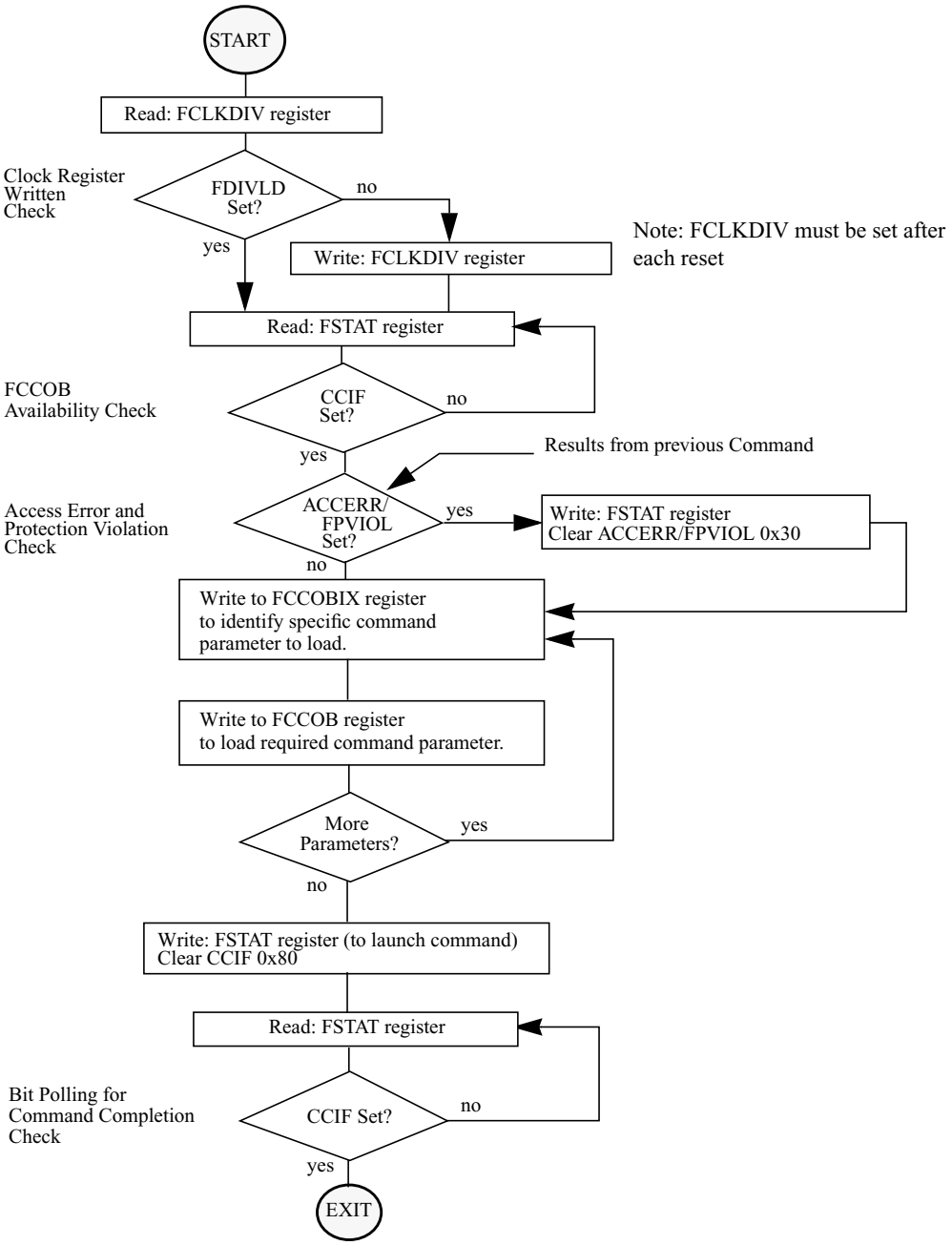

Figure 20-26. Generic Flash Command Write Sequence Flowchart

20.4.1.3 Valid Flash Module Commands

Table 20-28. Flash Commands by Mode

FCMD	Command	Unsecured				Secured			
		NS[1]	NX[2]	SS[3]	ST[4]	NS[5]	NX[6]	SS[7]	ST[8]
0x01	Erase Verify All Blocks	*	*	*	*	*	*	*	*
0x02	Erase Verify Block	*	*	*	*	*	*	*	*
0x03	Erase Verify P-Flash Section	*	*	*	*	*			
0x04	Read Once	*	*	*	*	*			
0x06	Program P-Flash	*	*	*	*	*			
0x07	Program Once	*	*	*	*	*			
0x08	Erase All Blocks			*	*			*	*
0x09	Erase Flash Block	*	*	*	*	*			
0x0A	Erase P-Flash Sector	*	*	*	*	*			
0x0B	Unsecure Flash			*	*			*	*
0x0C	Verify Backdoor Access Key	*				*			
0x0D	Set User Margin Level	*	*	*	*	*			
0x0E	Set Field Margin Level			*	*				
0x10	Erase Verify D-Flash Section	*	*	*	*	*			
0x11	Program D-Flash	*	*	*	*	*			
0x12	Erase D-Flash Sector	*	*	*	*	*			

1 Unsecured Normal Single Chip mode.
2 Unsecured Normal Expanded mode.
3 Unsecured Special Single Chip mode.
4 Unsecured Special Mode.
5 Secured Normal Single Chip mode.
6 Secured Normal Expanded mode.
7 Secured Special Single Chip mode.
8 Secured Special Mode.

20.4.1.4 P-Flash Commands

Table 20-29 summarizes the valid P-Flash commands along with the effects of the commands on the P-Flash block and other resources within the Flash module.

Table 20-29. P-Flash Commands

FCMD	Command	Function on P-Flash Memory
0x01	Erase Verify All Blocks	Verify that all P-Flash (and D-Flash) blocks are erased.
0x02	Erase Verify Block	Verify that a P-Flash block is erased.
0x03	Erase Verify P-Flash Section	Verify that a given number of words starting at the address provided are erased.
0x04	Read Once	Read a dedicated 64 byte field in the nonvolatile information register in P-Flash block 0 that was previously programmed using the Program Once command.
0x06	Program P-Flash	Program a phrase in a P-Flash block.
0x07	Program Once	Program a dedicated 64 byte field in the nonvolatile information register in P-Flash block 0 that is allowed to be programmed only once.
0x08	Erase All Blocks	Erase all P-Flash (and D-Flash) blocks. An erase of all Flash blocks is only possible when the FPLDIS, FPHDIS, and FPOPEN bits in the FPROT register and the DPOPEN bit in the DFPROT register are set prior to launching the command.
0x09	Erase Flash Block	Erase a P-Flash (or D-Flash) block. An erase of the full P-Flash block is only possible when FPLDIS, FPHDIS and FPOPEN bits in the FPROT register are set prior to launching the command.
0x0A	Erase P-Flash Sector	Erase all bytes in a P-Flash sector.
0x0B	Unsecure Flash	Supports a method of releasing MCU security by erasing all P-Flash (and D-Flash) blocks and verifying that all P-Flash (and D-Flash) blocks are erased.
0x0C	Verify Backdoor Access Key	Supports a method of releasing MCU security by verifying a set of security keys.
0x0D	Set User Margin Level	Specifies a user margin read level for all P-Flash blocks.
0x0E	Set Field Margin Level	Specifies a field margin read level for all P-Flash blocks (special modes only).

20.4.1.5 D-Flash Commands

Table 20-30 summarizes the valid D-Flash commands along with the effects of the commands on the D-Flash block.

Table 20-30. D-Flash Commands

FCMD	Command	Function on D-Flash Memory
0x01	Erase Verify All Blocks	Verify that all D-Flash (and P-Flash) blocks are erased.
0x02	Erase Verify Block	Verify that the D-Flash block is erased.
0x08	Erase All Blocks	Erase all D-Flash (and P-Flash) blocks. An erase of all Flash blocks is only possible when the FPLDIS, FPHDIS, and FPOPEN bits in the FPROT register and the DPOPEN bit in the DFPROT register are set prior to launching the command.
0x09	Erase Flash Block	Erase a D-Flash (or P-Flash) block. An erase of the full D-Flash block is only possible when DPOPEN bit in the DFPROT register is set prior to launching the command.

Table 20-30. D-Flash Commands

FCMD	Command	Function on D-Flash Memory
0x0B	Unsecure Flash	Supports a method of releasing MCU security by erasing all D-Flash (and P-Flash) blocks and verifying that all D-Flash (and P-Flash) blocks are erased.
0x0D	Set User Margin Level	Specifies a user margin read level for the D-Flash block.
0x0E	Set Field Margin Level	Specifies a field margin read level for the D-Flash block (special modes only).
0x10	Erase Verify D-Flash Section	Verify that a given number of words starting at the address provided are erased.
0x11	Program D-Flash	Program up to four words in the D-Flash block.
0x12	Erase D-Flash Sector	Erase all bytes in a sector of the D-Flash block.

20.4.2 Flash Command Description

This section provides details of all available Flash commands launched by a command write sequence. The ACCERR bit in the FSTAT register will be set during the command write sequence if any of the following illegal steps are performed, causing the command not to be processed by the Memory Controller:

- Starting any command write sequence that programs or erases Flash memory before initializing the FCLKDIV register
- Writing an invalid command as part of the command write sequence
- For additional possible errors, refer to the error handling table provided for each command

If a Flash block is read during execution of an algorithm (CCIF = 0) on that same block, the read operation will return invalid data. If the SFDIF or DFDIF flags were not previously set when the invalid read operation occurred, both the SFDIF and DFDIF flags will be set and the FECCR registers will be loaded with the global address used in the invalid read operation with the data and parity fields set to all 0.

If the ACCERR or FPVIOL bits are set in the FSTAT register, the user must clear these bits before starting any command write sequence (see Section 20.3.2.7).

CAUTION

A Flash word or phrase must be in the erased state before being programmed. Cumulative programming of bits within a Flash word or phrase is not allowed.

20.4.2.1 Erase Verify All Blocks Command

The Erase Verify All Blocks command will verify that all P-Flash and D-Flash blocks have been erased.

Table 20-31. Erase Verify All Blocks Command FCCOB Requirements

CCOBIX[2:0]	FCCOB Parameters	
000	0x01	Not required

Upon clearing CCIF to launch the Erase Verify All Blocks command, the Memory Controller will verify that the entire Flash memory space is erased. The CCIF flag will set after the Erase Verify All Blocks operation has completed.

Table 20-32. Erase Verify All Blocks Command Error Handling

Register	Error Bit	Error Condition
FSTAT	ACCERR	Set if CCOBIX[2:0] != 000 at command launch
	FPVIOL	None
	MGSTAT1	Set if any errors have been encountered during the read[1]
	MGSTAT0	Set if any non-correctable errors have been encountered during the read[1]

[1] As found in the memory map for FTMR128K1.

20.4.2.2 Erase Verify Block Command

The Erase Verify Block command allows the user to verify that an entire P-Flash or D-Flash block has been erased. The FCCOB upper global address bits determine which block must be verified.

Table 20-33. Erase Verify Block Command FCCOB Requirements

CCOBIX[2:0]	FCCOB Parameters	
000	0x02	Global address [22:16] of the Flash block to be verified.

Upon clearing CCIF to launch the Erase Verify Block command, the Memory Controller will verify that the selected P-Flash or D-Flash block is erased. The CCIF flag will set after the Erase Verify Block operation has completed.

Table 20-34. Erase Verify Block Command Error Handling

Register	Error Bit	Error Condition
FSTAT	ACCERR	Set if CCOBIX[2:0] != 000 at command launch
		Set if an invalid global address [22:16] is supplied[1]
	FPVIOL	None
	MGSTAT1	Set if any errors have been encountered during the read[2]
	MGSTAT0	Set if any non-correctable errors have been encountered during the read[2]

[1] As defined by the memory map for FTMR128K1.
[2] As found in the memory map for FTMR128K1.

20.4.2.3 Erase Verify P-Flash Section Command

The Erase Verify P-Flash Section command will verify that a section of code in the P-Flash memory is erased. The Erase Verify P-Flash Section command defines the starting point of the code to be verified and the number of phrases. The section to be verified cannot cross a 128 Kbyte boundary in the P-Flash memory space.

Table 20-35. Erase Verify P-Flash Section Command FCCOB Requirements

CCOBIX[2:0]	FCCOB Parameters	
000	0x03	Global address [22:16] of a P-Flash block
001	Global address [15:0] of the first phrase to be verified	
010	Number of phrases to be verified	

Upon clearing CCIF to launch the Erase Verify P-Flash Section command, the Memory Controller will verify the selected section of Flash memory is erased. The CCIF flag will set after the Erase Verify P-Flash Section operation has completed.

Table 20-36. Erase Verify P-Flash Section Command Error Handling

Register	Error Bit	Error Condition
FSTAT	ACCERR	Set if CCOBIX[2:0] != 010 at command launch
		Set if command not available in current mode (see Table 20-28)
		Set if an invalid global address [22:0] is supplied[1]
		Set if a misaligned phrase address is supplied (global address [2:0] != 000)
		Set if the requested section crosses a 128 Kbyte boundary
	FPVIOL	None
	MGSTAT1	Set if any errors have been encountered during the read[2]
	MGSTAT0	Set if any non-correctable errors have been encountered during the read[2]

[1] As defined by the memory map for FTMR128K1.

[2] As found in the memory map for FTMR128K1.

20.4.2.4 Read Once Command

The Read Once command provides read access to a reserved 64 byte field (8 phrases) located in the nonvolatile information register of P-Flash block 0. The Read Once field is programmed using the Program Once command described in Section 20.4.2.6. The Read Once command must not be executed from the Flash block containing the Program Once reserved field to avoid code runaway.

Table 20-37. Read Once Command FCCOB Requirements

CCOBIX[2:0]	FCCOB Parameters	
000	0x04	Not Required
001	Read Once phrase index (0x0000 - 0x0007)	
010	Read Once word 0 value	
011	Read Once word 1 value	
100	Read Once word 2 value	
101	Read Once word 3 value	

Upon clearing CCIF to launch the Read Once command, a Read Once phrase is fetched and stored in the FCCOB indexed register. The CCIF flag will set after the Read Once operation has completed. Valid phrase index values for the Read Once command range from 0x0000 to 0x0007. During execution of the Read Once command, any attempt to read addresses within P-Flash block will return invalid data.

Table 20-38. Read Once Command Error Handling

Register	Error Bit	Error Condition
FSTAT	ACCERR	Set if CCOBIX[2:0] != 001 at command launch
		Set if command not available in current mode (see Table 20-28)
		Set if an invalid phrase index is supplied
	FPVIOL	None
	MGSTAT1	Set if any errors have been encountered during the read
	MGSTAT0	Set if any non-correctable errors have been encountered during the read

20.4.2.5 Program P-Flash Command

The Program P-Flash operation will program a previously erased phrase in the P-Flash memory using an embedded algorithm.

CAUTION

A P-Flash phrase must be in the erased state before being programmed. Cumulative programming of bits within a Flash phrase is not allowed.

Table 20-39. Program P-Flash Command FCCOB Requirements

CCOBIX[2:0]	FCCOB Parameters	
000	0x06	Global address [22:16] to identify P-Flash block
001	Global address [15:0] of phrase location to be programmed[1]	
010	Word 0 program value	
011	Word 1 program value	
100	Word 2 program value	
101	Word 3 program value	

[1] Global address [2:0] must be 000

Upon clearing CCIF to launch the Program P-Flash command, the Memory Controller will program the data words to the supplied global address and will then proceed to verify the data words read back as expected. The CCIF flag will set after the Program P-Flash operation has completed.

Table 20-40. Program P-Flash Command Error Handling

Register	Error Bit	Error Condition
FSTAT	ACCERR	Set if CCOBIX[2:0] != 101 at command launch
		Set if command not available in current mode (see Table 20-28)
		Set if an invalid global address [22:0] is supplied[1]
		Set if a misaligned phrase address is supplied (global address [2:0] != 000)
	FPVIOL	Set if the global address [22:0] points to a protected area
	MGSTAT1	Set if any errors have been encountered during the verify operation
	MGSTAT0	Set if any non-correctable errors have been encountered during the verify operation

[1] As defined by the memory map for FTMR128K1.

20.4.2.6 Program Once Command

The Program Once command restricts programming to a reserved 64 byte field (8 phrases) in the nonvolatile information register located in P-Flash block 0. The Program Once reserved field can be read using the Read Once command as described in Section 20.4.2.4. The Program Once command must only be issued once since the nonvolatile information register in P-Flash block 0 cannot be erased. The Program Once command must not be executed from the Flash block containing the Program Once reserved field to avoid code runaway.

Table 20-41. Program Once Command FCCOB Requirements

CCOBIX[2:0]	FCCOB Parameters	
000	0x07	Not Required
001	Program Once phrase index (0x0000 - 0x0007)	
010	Program Once word 0 value	
011	Program Once word 1 value	
100	Program Once word 2 value	
101	Program Once word 3 value	

Upon clearing CCIF to launch the Program Once command, the Memory Controller first verifies that the selected phrase is erased. If erased, then the selected phrase will be programmed and then verified with read back. The CCIF flag will remain clear, setting only after the Program Once operation has completed.

The reserved nonvolatile information register accessed by the Program Once command cannot be erased and any attempt to program one of these phrases a second time will not be allowed. Valid phrase index values for the Program Once command range from 0x0000 to 0x0007. During execution of the Program Once command, any attempt to read addresses within P-Flash block 0 will return invalid data.

Table 20-42. Program Once Command Error Handling

Register	Error Bit	Error Condition
FSTAT	ACCERR	Set if CCOBIX[2:0] != 101 at command launch
		Set if command not available in current mode (see Table 20-28)
		Set if an invalid phrase index is supplied
		Set if the requested phrase has already been programmed[1]
	FPVIOL	None
	MGSTAT1	Set if any errors have been encountered during the verify operation
	MGSTAT0	Set if any non-correctable errors have been encountered during the verify operation

[1] If a Program Once phrase is initially programmed to 0xFFFF_FFFF_FFFF_FFFF, the Program Once command will be allowed to execute again on that same phrase.

20.4.2.7 Erase All Blocks Command

The Erase All Blocks operation will erase the entire P-Flash and D-Flash memory space.

Table 20-43. Erase All Blocks Command FCCOB Requirements

CCOBIX[2:0]	FCCOB Parameters	
000	0x08	Not required

Upon clearing CCIF to launch the Erase All Blocks command, the Memory Controller will erase the entire Flash memory space and verify that it is erased. If the Memory Controller verifies that the entire Flash memory space was properly erased, security will be released. During the execution of this command (CCIF=0) the user must not write to any Flash module register. The CCIF flag will set after the Erase All Blocks operation has completed.

Table 20-44. Erase All Blocks Command Error Handling

Register	Error Bit	Error Condition
FSTAT	ACCERR	Set if CCOBIX[2:0] != 000 at command launch
		Set if command not available in current mode (see Table 20-28)
	FPVIOL	Set if any area of the P-Flash or D-Flash memory is protected
	MGSTAT1	Set if any errors have been encountered during the verify operation[1]
	MGSTAT0	Set if any non-correctable errors have been encountered during the verify operation[1]

[1] As found in the memory map for FTMR128K1.

20.4.2.8 Erase Flash Block Command

The Erase Flash Block operation will erase all addresses in a P-Flash or D-Flash block.

Table 20-45. Erase Flash Block Command FCCOB Requirements

CCOBIX[2:0]	FCCOB Parameters	
000	0x09	Global address [22:16] to identify Flash block
001	Global address [15:0] in Flash block to be erased	

Upon clearing CCIF to launch the Erase Flash Block command, the Memory Controller will erase the selected Flash block and verify that it is erased. The CCIF flag will set after the Erase Flash Block operation has completed.

Table 20-46. Erase Flash Block Command Error Handling

Register	Error Bit	Error Condition
FSTAT	ACCERR	Set if CCOBIX[2:0] != 001 at command launch
		Set if command not available in current mode (see Table 20-28)
		Set if an invalid global address [22:16] is supplied[1]
		Set if the supplied P-Flash address is not phrase-aligned or if the D-Flash address is not word-aligned
	FPVIOL	Set if an area of the selected Flash block is protected
	MGSTAT1	Set if any errors have been encountered during the verify operation[2]
	MGSTAT0	Set if any non-correctable errors have been encountered during the verify operation[2]

[1] As defined by the memory map for FTMR128K1.

[2] As found in the memory map for FTMR128K1.

20.4.2.9 Erase P-Flash Sector Command

The Erase P-Flash Sector operation will erase all addresses in a P-Flash sector.

Table 20-47. Erase P-Flash Sector Command FCCOB Requirements

CCOBIX[2:0]	FCCOB Parameters	
000	0x0A	Global address [22:16] to identify P-Flash block to be erased
001	Global address [15:0] anywhere within the sector to be erased. Refer to Section 20.1.2.1 for the P-Flash sector size.	

Upon clearing CCIF to launch the Erase P-Flash Sector command, the Memory Controller will erase the selected Flash sector and then verify that it is erased. The CCIF flag will be set after the Erase P-Flash Sector operation has completed.

Table 20-48. Erase P-Flash Sector Command Error Handling

Register	Error Bit	Error Condition
FSTAT	ACCERR	Set if CCOBIX[2:0] != 001 at command launch
		Set if command not available in current mode (see Table 20-28)
		Set if an invalid global address [22:16] is supplied[1]
		Set if a misaligned phrase address is supplied (global address [2:0] != 000)
	FPVIOL	Set if the selected P-Flash sector is protected
	MGSTAT1	Set if any errors have been encountered during the verify operation
	MGSTAT0	Set if any non-correctable errors have been encountered during the verify operation

[1] As defined by the memory map for FTMR128K1.

20.4.2.10 Unsecure Flash Command

The Unsecure Flash command will erase the entire P-Flash and D-Flash memory space and, if the erase is successful, will release security.

Table 20-49. Unsecure Flash Command FCCOB Requirements

CCOBIX[2:0]	FCCOB Parameters	
000	0x0B	Not required

Upon clearing CCIF to launch the Unsecure Flash command, the Memory Controller will erase the entire P-Flash and D-Flash memory space and verify that it is erased. If the Memory Controller verifies that the entire Flash memory space was properly erased, security will be released. If the erase verify is not successful, the Unsecure Flash operation sets MGSTAT1 and terminates without changing the security state. During the execution of this command (CCIF=0) the user must not write to any Flash module register. The CCIF flag is set after the Unsecure Flash operation has completed.

Table 20-50. Unsecure Flash Command Error Handling

Register	Error Bit	Error Condition
FSTAT	ACCERR	Set if CCOBIX[2:0] != 000 at command launch
		Set if command not available in current mode (see Table 20-28)
	FPVIOL	Set if any area of the P-Flash or D-Flash memory is protected
	MGSTAT1	Set if any errors have been encountered during the verify operation[1]
	MGSTAT0	Set if any non-correctable errors have been encountered during the verify operation[1]

[1] As found in the memory map for FTMR128K1.

20.4.2.11 Verify Backdoor Access Key Command

The Verify Backdoor Access Key command will only execute if it is enabled by the KEYEN bits in the FSEC register (see Table 20-9). The Verify Backdoor Access Key command releases security if user-supplied keys match those stored in the Flash security bytes of the Flash configuration field (see Table 20-3). The Verify Backdoor Access Key command must not be executed from the Flash block containing the backdoor comparison key to avoid code runaway.

Table 20-51. Verify Backdoor Access Key Command FCCOB Requirements

CCOBIX[2:0]	FCCOB Parameters	
000	0x0C	Not required
001	Key 0	
010	Key 1	
011	Key 2	
100	Key 3	

Upon clearing CCIF to launch the Verify Backdoor Access Key command, the Memory Controller will check the FSEC KEYEN bits to verify that this command is enabled. If not enabled, the Memory Controller sets the ACCERR bit in the FSTAT register and terminates. If the command is enabled, the Memory Controller compares the key provided in FCCOB to the backdoor comparison key in the Flash configuration field with Key 0 compared to 0x7F_FF00, etc. If the backdoor keys match, security will be released. If the backdoor keys do not match, security is not released and all future attempts to execute the Verify Backdoor Access Key command are aborted (set ACCERR) until a reset occurs. The CCIF flag is set after the Verify Backdoor Access Key operation has completed.

Table 20-52. Verify Backdoor Access Key Command Error Handling

Register	Error Bit	Error Condition
FSTAT	ACCERR	Set if CCOBIX[2:0] != 100 at command launch
		Set if an incorrect backdoor key is supplied
		Set if backdoor key access has not been enabled (KEYEN[1:0] != 10, see Section 20.3.2.2)
		Set if the backdoor key has mismatched since the last reset
	FPVIOL	None
	MGSTAT1	None
	MGSTAT0	None

20.4.2.12 Set User Margin Level Command

The Set User Margin Level command causes the Memory Controller to set the margin level for future read operations of a specific P-Flash or D-Flash block.

Table 20-53. Set User Margin Level Command FCCOB Requirements

CCOBIX[2:0]	FCCOB Parameters	
000	0x0D	Global address [22:16] to identify the Flash block
001	Margin level setting	

Upon clearing CCIF to launch the Set User Margin Level command, the Memory Controller will set the user margin level for the targeted block and then set the CCIF flag.

Valid margin level settings for the Set User Margin Level command are defined in Table 20-54.

Table 20-54. Valid Set User Margin Level Settings

CCOB (CCOBIX=001)	Level Description
0x0000	Return to Normal Level
0x0001	User Margin-1 Level[1]
0x0002	User Margin-0 Level[2]

[1] Read margin to the erased state

[2] Read margin to the programmed state

Table 20-55. Set User Margin Level Command Error Handling

Register	Error Bit	Error Condition
FSTAT	ACCERR	Set if CCOBIX[2:0] != 001 at command launch
		Set if command not available in current mode (see Table 20-28)
		Set if an invalid global address [22:16] is supplied[1]
		Set if an invalid margin level setting is supplied
	FPVIOL	None
	MGSTAT1	None
	MGSTAT0	None

[1] As defined by the memory map for FTMR128K1.

NOTE

User margin levels can be used to check that Flash memory contents have adequate margin for normal level read operations. If unexpected results are encountered when checking Flash memory contents at user margin levels, a potential loss of information has been detected.

20.4.2.13 Set Field Margin Level Command

The Set Field Margin Level command, valid in special modes only, causes the Memory Controller to set the margin level specified for future read operations of a specific P-Flash or D-Flash block.

Table 20-56. Set Field Margin Level Command FCCOB Requirements

CCOBIX[2:0]	FCCOB Parameters	
000	0x0E	Global address [22:16] to identify the Flash block
001	Margin level setting	

Upon clearing CCIF to launch the Set Field Margin Level command, the Memory Controller will set the field margin level for the targeted block and then set the CCIF flag. Valid margin level settings for the Set Field Margin Level command are defined in Table 20-57.

Table 20-57. Valid Set Field Margin Level Settings

CCOB (CCOBIX=001)	Level Description
0x0000	Return to Normal Level
0x0001	User Margin-1 Level[1]
0x0002	User Margin-0 Level[2]
0x0003	Field Margin-1 Level[1]
0x0004	Field Margin-0 Level[2]

[1] Read margin to the erased state

[2] Read margin to the programmed state

Table 20-58. Set Field Margin Level Command Error Handling

Register	Error Bit	Error Condition
FSTAT	ACCERR	Set if CCOBIX[2:0] != 001 at command launch
		Set if command not available in current mode (see Table 20-28)
		Set if an invalid global address [22:16] is supplied[1]
		Set if an invalid margin level setting is supplied
	FPVIOL	None
	MGSTAT1	None
	MGSTAT0	None

[1] As defined by the memory map for FTMR128K1.

CAUTION

Field margin levels must only be used during verify of the initial factory programming.

NOTE

Field margin levels can be used to check that Flash memory contents have adequate margin for data retention at the normal level setting. If unexpected results are encountered when checking Flash memory contents at field margin levels, the Flash memory contents should be erased and reprogrammed.

20.4.2.14 Erase Verify D-Flash Section Command

The Erase Verify D-Flash Section command will verify that a section of code in the D-Flash is erased. The Erase Verify D-Flash Section command defines the starting point of the data to be verified and the number of words.

Table 20-59. Erase Verify D-Flash Section Command FCCOB Requirements

CCOBIX[2:0]	FCCOB Parameters	
000	0x10	Global address [22:16] to identify the D-Flash block
001	Global address [15:0] of the first word to be verified	
010	Number of words to be verified	

Upon clearing CCIF to launch the Erase Verify D-Flash Section command, the Memory Controller will verify the selected section of D-Flash memory is erased. The CCIF flag will set after the Erase Verify D-Flash Section operation has completed.

Table 20-60. Erase Verify D-Flash Section Command Error Handling

Register	Error Bit	Error Condition
FSTAT	ACCERR	Set if CCOBIX[2:0] != 010 at command launch
		Set if command not available in current mode (see Table 20-28)
		Set if an invalid global address [22:0] is supplied
		Set if a misaligned word address is supplied (global address [0] != 0)
		Set if the requested section breaches the end of the D-Flash block
	FPVIOL	None
	MGSTAT1	Set if any errors have been encountered during the read
	MGSTAT0	Set if any non-correctable errors have been encountered during the read

20.4.2.15 Program D-Flash Command

The Program D-Flash operation programs one to four previously erased words in the D-Flash block. The Program D-Flash operation will confirm that the targeted location(s) were successfully programmed upon completion.

CAUTION

A Flash word must be in the erased state before being programmed. Cumulative programming of bits within a Flash word is not allowed.

Table 20-61. Program D-Flash Command FCCOB Requirements

CCOBIX[2:0]	FCCOB Parameters	
000	0x11	Global address [22:16] to identify the D-Flash block
001	Global address [15:0] of word to be programmed	
010	Word 0 program value	
011	Word 1 program value, if desired	
100	Word 2 program value, if desired	
101	Word 3 program value, if desired	

Upon clearing CCIF to launch the Program D-Flash command, the user-supplied words will be transferred to the Memory Controller and be programmed if the area is unprotected. The CCOBIX index value at Program D-Flash command launch determines how many words will be programmed in the D-Flash block. The CCIF flag is set when the operation has completed.

Table 20-62. Program D-Flash Command Error Handling

Register	Error Bit	Error Condition
FSTAT	ACCERR	Set if CCOBIX[2:0] < 010 at command launch
		Set if CCOBIX[2:0] > 101 at command launch
		Set if command not available in current mode (see Table 20-28)
		Set if an invalid global address [22:0] is supplied
		Set if a misaligned word address is supplied (global address [0] != 0)
		Set if the requested group of words breaches the end of the D-Flash block
	FPVIOL	Set if the selected area of the D-Flash memory is protected
	MGSTAT1	Set if any errors have been encountered during the verify operation
	MGSTAT0	Set if any non-correctable errors have been encountered during the verify operation

20.4.2.16 Erase D-Flash Sector Command

The Erase D-Flash Sector operation will erase all addresses in a sector of the D-Flash block.

Table 20-63. Erase D-Flash Sector Command FCCOB Requirements

CCOBIX[2:0]	FCCOB Parameters	
000	0x12	Global address [22:16] to identify D-Flash block

Table 20-63. Erase D-Flash Sector Command FCCOB Requirements

CCOBIX[2:0]	FCCOB Parameters
001	Global address [15:0] anywhere within the sector to be erased. See Section 20.1.2.2 for D-Flash sector size.

Upon clearing CCIF to launch the Erase D-Flash Sector command, the Memory Controller will erase the selected Flash sector and verify that it is erased. The CCIF flag will set after the Erase D-Flash Sector operation has completed.

Table 20-64. Erase D-Flash Sector Command Error Handling

Register	Error Bit	Error Condition
FSTAT	ACCERR	Set if CCOBIX[2:0] != 001 at command launch
		Set if command not available in current mode (see Table 20-28)
		Set if an invalid global address [22:0] is supplied
		Set if a misaligned word address is supplied (global address [0] != 0)
	FPVIOL	Set if the selected area of the D-Flash memory is protected
	MGSTAT1	Set if any errors have been encountered during the verify operation
	MGSTAT0	Set if any non-correctable errors have been encountered during the verify operation

20.4.3 Interrupts

The Flash module can generate an interrupt when a Flash command operation has completed or when a Flash command operation has detected an ECC fault.

Table 20-65. Flash Interrupt Sources

Interrupt Source	Interrupt Flag	Local Enable	Global (CCR) Mask
Flash Command Complete	CCIF (FSTAT register)	CCIE (FCNFG register)	I Bit
ECC Double Bit Fault on Flash Read	DFDIF (FERSTAT register)	DFDIE (FERCNFG register)	I Bit
ECC Single Bit Fault on Flash Read	SFDIF (FERSTAT register)	SFDIE (FERCNFG register)	I Bit

NOTE

Vector addresses and their relative interrupt priority are determined at the MCU level.

20.4.3.1 Description of Flash Interrupt Operation

The Flash module uses the CCIF flag in combination with the CCIE interrupt enable bit to generate the Flash command interrupt request. The Flash module uses the DFDIF and SFDIF flags in combination with

the DFDIE and SFDIE interrupt enable bits to generate the Flash error interrupt request. For a detailed description of the register bits involved, refer to Section 20.3.2.5, “Flash Configuration Register (FCNFG)”, Section 20.3.2.6, “Flash Error Configuration Register (FERCNFG)”, Section 20.3.2.7, “Flash Status Register (FSTAT)”, and Section 20.3.2.8, “Flash Error Status Register (FERSTAT)”.

The logic used for generating the Flash module interrupts is shown in Figure 20-27.

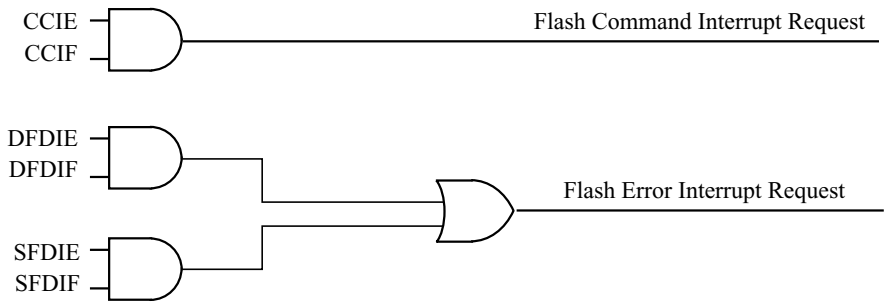

Figure 20-27. Flash Module Interrupts Implementation

20.4.4 Wait Mode

The Flash module is not affected if the MCU enters wait mode. The Flash module can recover the MCU from wait via the CCIF interrupt (see Section 20.4.3, “Interrupts”).

20.4.5 Stop Mode

If a Flash command is active (CCIF = 0) when the MCU requests stop mode, the current Flash operation will be completed before the CPU is allowed to enter stop mode.

20.5 Security

The Flash module provides security information to the MCU. The Flash security state is defined by the SEC bits of the FSEC register (see Table 20-10). During reset, the Flash module initializes the FSEC register using data read from the security byte of the Flash configuration field at global address 0x7F_FF0F.

The security state out of reset can be permanently changed by programming the security byte of the Flash configuration field. This assumes that you are starting from a mode where the necessary P-Flash erase and program commands are available and that the upper region of the P-Flash is unprotected. If the Flash security byte is successfully programmed, its new value will take affect after the next MCU reset.

The following subsections describe these security-related subjects:

- Unsecuring the MCU using Backdoor Key Access
- Unsecuring the MCU in Special Single Chip Mode using BDM
- Mode and Security Effects on Flash Command Availability

20.5.1 Unsecuring the MCU using Backdoor Key Access

The MCU may be unsecured by using the backdoor key access feature which requires knowledge of the contents of the backdoor keys (four 16-bit words programmed at addresses 0x7F_FF00–0x7F_FF07). If the KEYEN[1:0] bits are in the enabled state (see Section 20.3.2.2), the Verify Backdoor Access Key command (see Section 20.4.2.11) allows the user to present four prospective keys for comparison to the keys stored in the Flash memory via the Memory Controller. If the keys presented in the Verify Backdoor Access Key command match the backdoor keys stored in the Flash memory, the SEC bits in the FSEC register (see Table 20-10) will be changed to unsecure the MCU. Key values of 0x0000 and 0xFFFF are not permitted as backdoor keys. While the Verify Backdoor Access Key command is active, P-Flash block 0 will not be available for read access and will return invalid data.

The user code stored in the P-Flash memory must have a method of receiving the backdoor keys from an external stimulus. This external stimulus would typically be through one of the on-chip serial ports.

If the KEYEN[1:0] bits are in the enabled state (see Section 20.3.2.2), the MCU can be unsecured by the backdoor key access sequence described below:

1. Follow the command sequence for the Verify Backdoor Access Key command as explained in Section 20.4.2.11
2. If the Verify Backdoor Access Key command is successful, the MCU is unsecured and the SEC[1:0] bits in the FSEC register are forced to the unsecure state of 10

The Verify Backdoor Access Key command is monitored by the Memory Controller and an illegal key will prohibit future use of the Verify Backdoor Access Key command. A reset of the MCU is the only method to re-enable the Verify Backdoor Access Key command.

After the backdoor keys have been correctly matched, the MCU will be unsecured. After the MCU is unsecured, the sector containing the Flash security byte can be erased and the Flash security byte can be reprogrammed to the unsecure state, if desired.

In the unsecure state, the user has full control of the contents of the backdoor keys by programming addresses 0x7F_FF00–0x7F_FF07 in the Flash configuration field.

The security as defined in the Flash security byte (0x7F_FF0F) is not changed by using the Verify Backdoor Access Key command sequence. The backdoor keys stored in addresses 0x7F_FF00–0x7F_FF07 are unaffected by the Verify Backdoor Access Key command sequence. After the next reset of the MCU, the security state of the Flash module is determined by the Flash security byte (0x7F_FF0F). The Verify Backdoor Access Key command sequence has no effect on the program and erase protections defined in the Flash protection register, FPROT.

20.5.2 Unsecuring the MCU in Special Single Chip Mode using BDM

The MCU can be unsecured in special single chip mode by erasing the P-Flash and D-Flash memory by one of the following methods:

- Reset the MCU into special single chip mode, delay while the erase test is performed by the BDM, send BDM commands to disable protection in the P-Flash and D-Flash memory, and execute the Erase All Blocks command write sequence to erase the P-Flash and D-Flash memory.

- Reset the MCU into special expanded wide mode, disable protection in the P-Flash and D-Flash memory and run code from external memory to execute the Erase All Blocks command write sequence to erase the P-Flash and D-Flash memory.

After the CCIF flag sets to indicate that the Erase All Blocks operation has completed, reset the MCU into special single chip mode. The BDM will execute the Erase Verify All Blocks command write sequence to verify that the P-Flash and D-Flash memory is erased. If the P-Flash and D-Flash memory are verified as erased the MCU will be unsecured. All BDM commands will be enabled and the Flash security byte may be programmed to the unsecure state by the following method:

- Send BDM commands to execute a 'Program P-Flash' command sequence to program the Flash security byte to the unsecured state and reset the MCU.

20.5.3 Mode and Security Effects on Flash Command Availability

The availability of Flash module commands depends on the MCU operating mode and security state as shown in Table 20-28.

20.6 Initialization

On each system reset the Flash module executes a reset sequence which establishes initial values for the Flash Block Configuration Parameters, the FPROT and DFPROT protection registers, and the FOPT and FSEC registers. The Flash module reverts to built-in default values that leave the module in a fully protected and secured state if errors are encountered during execution of the reset sequence. If a double bit fault is detected during the reset sequence, both MGSTAT bits in the FSTAT register will be set.

CCIF remains clear throughout the reset sequence. The Flash module holds off all CPU access for the initial portion of the reset sequence. While Flash reads are possible when the hold is removed, writes to the FCCOBIX, FCCOBHI, and FCCOBLO registers are ignored to prevent command activity while the Memory Controller remains busy. Completion of the reset sequence is marked by setting CCIF high which enables writes to the FCCOBIX, FCCOBHI, and FCCOBLO registers to launch any available Flash command.

If a reset occurs while any Flash command is in progress, that command will be immediately aborted. The state of the word being programmed or the sector/block being erased is not guaranteed.

Appendix A
Electrical Characteristics

A.1 General

NOTE

The electrical characteristics given in this section should be used as a guide only. Values cannot be guaranteed by Freescale and are subject to change without notice. Data are currently based on characterization data of 9S12XS128 material only unless marked differently.

This supplement contains the most accurate electrical information for the S12XS family microcontroller available at the time of publication.

This introduction is intended to give an overview on several common topics like power supply, current injection etc.

A.1.1 Parameter Classification

The electrical parameters shown in this supplement are guaranteed by various methods. To give the customer a better understanding the following classification is used and the parameters are tagged accordingly in the tables where appropriate.

NOTE

This classification is shown in the column labeled “C” in the parameter tables where appropriate.

P: Those parameters are guaranteed during production testing on each individual device.

C: Those parameters are achieved by the design characterization by measuring a statistically relevant sample size across process variations.

T: Those parameters are achieved by design characterization on a small sample size from typical devices under typical conditions unless otherwise noted. All values shown in the typical column are within this category.

D: Those parameters are derived mainly from simulations.

A.1.2 Power Supply

The S12XS family utilizes several pins to supply power to the I/O ports, A/D converter, oscillator, and PLL as well as the digital core.

The VDDA, VSSA pin pairs supply the A/D converter and parts of the internal voltage regulator.

The VDDX, VSSX pin pairs [2:1] supply the I/O pins.

VDDR supplies the internal voltage regulator.

VDDPLL, VSSPLL pin pair supply the oscillator and the PLL.

VSS1, VSS2 and VSS3 are internally connected by metal.

All VDDX pins are internally connected by metal.

All VSSX pins are internally connected by metal.

VDDA is connected to all VDDX pins by diodes for ESD protection such that VDDX must not exceed VDDA by more than a diode voltage drop. VDDA can exceed VDDX by more than a diode drop in order to support applications with a 5V A/D converter range and 3.3V I/O pin range.

VSSA and VSSX are connected by anti-parallel diodes for ESD protection.

NOTE

In the following context V_{DD35} is used for either VDDA, VDDR, and VDDX; V_{SS35} is used for either VSSA and VSSX unless otherwise noted.

I_{DD35} denotes the sum of the currents flowing into the VDDA and VDDR pins. The Run mode current in the VDDX domain is external load dependent.

V_{DD} is used for VDD, V_{SS} is used for VSS1, VSS2 and VSS3.

V_{DDPLL} is used for VDDPLL, V_{SSPLL} is used for VSSPLL

I_{DD} is used for the sum of the currents flowing into VDD, VDDF and VDDPLL.

A.1.3 Pins

There are four groups of functional pins.

A.1.3.1 I/O Pins

The I/O pins have a level in the range of 3.13V to 5.5V. This class of pins is comprised of all port I/O pins, the analog inputs, BKGD and the $\overline{\text{RESET}}$ pins. Some functionality may be disabled. For example the BKGD pin pull up is always enabled.

A.1.3.2 Analog Reference

This group is made up by the V_{RH} and V_{RL} pins.

A.1.3.3 Oscillator

The pins EXTAL, XTAL dedicated to the oscillator have a nominal 1.8V level. They are supplied by VDDPLL.

A.1.3.4 TEST

This pin is used for production testing only. The TEST pin must be tied to V_{SS} in all applications.

A.1.4 Current Injection

Power supply must maintain regulation within operating V_{DD35} or V_{DD} range during instantaneous and operating maximum current conditions. If positive injection current ($V_{in} > V_{DD35}$) is greater than I_{DD35}, the injection current may flow out of V_{DD35} and could result in external power supply going out of regulation. Ensure external V_{DD35} load will shunt current greater than maximum injection current. This will be the greatest risk when the MCU is not consuming power; e.g., if no system clock is present, or if clock rate is very low which would reduce overall power consumption.

A.1.5 Absolute Maximum Ratings

Absolute maximum ratings are stress ratings only. A functional operation under or outside those maxima is not guaranteed. Stress beyond those limits may affect the reliability or cause permanent damage of the device.

This device contains circuitry protecting against damage due to high static voltage or electrical fields; however, it is advised that normal precautions be taken to avoid application of any voltages higher than maximum-rated voltages to this high-impedance circuit. Reliability of operation is enhanced if unused inputs are tied to an appropriate logic voltage level (e.g., either V_{SS35} or V_{DD35}).

Table A-1. Absolute Maximum Ratings[1]

Num	Rating	Symbol	Min	Max	Unit
1	I/O, regulator and analog supply voltage	V_{DD35}	–0.3	6.0	V
2	Digital logic supply voltage[2]	V_{DD}	–0.3	2.16	V
3	PLL supply voltage[2]	V_{DDPLL}	–0.3	2.16	V
4	NVM supply voltage[2]	V_{DDF}	–0.3	3.6	V
5	Voltage difference V_{DDX} to V_{DDA}	Δ_{VDDX}	–6.0	0.3	V
6	Voltage difference V_{SSX} to V_{SSA}	Δ_{VSSX}	–0.3	0.3	V
7	Digital I/O input voltage	V_{IN}	–0.3	6.0	V
8	Analog reference	V_{RH}, V_{RL}	–0.3	6.0	V
9	EXTAL, XTAL	V_{ILV}	–0.3	2.16	V
11	Instantaneous maximum current Single pin limit for all digital I/O pins[3]	I_D	–25	+25	mA
12	Instantaneous maximum current Single pin limit for EXTAL, XTAL[4]	I_{DL}	–25	+25	mA
14	Maximum current Single pin limit for power supply pins	I_{DV}	–100	+100	mA
15	Storage temperature range	T_{stg}	–65	155	°C

1 Beyond absolute maximum ratings device might be damaged.
2 The device contains an internal voltage regulator to generate the logic and PLL supply out of the I/O supply. The absolute maximum ratings apply when the device is powered from an external source.
3 All digital I/O pins are internally clamped to V_{SSX} and V_{DDX}, or V_{SSA} and V_{DDA}.
4 Those pins are internally clamped to V_{SSPLL} and V_{DDPLL}.

A.1.6 ESD Protection and Latch-up Immunity

All ESD testing is in conformity with CDF-AEC-Q100 stress test qualification for automotive grade integrated circuits. During the device qualification ESD stresses were performed for the Human Body Model (HBM) and the Charge Device Model.

A device will be defined as a failure if after exposure to ESD pulses the device no longer meets the device specification. Complete DC parametric and functional testing is performed per the applicable device specification at room temperature followed by hot temperature, unless specified otherwise in the device specification.

Table A-2. ESD and Latch-up Test Conditions

Model	Description	Symbol	Value	Unit
Human Body	Series resistance	R1	1500	Ohm
	Storage capacitance	C	100	pF
	Number of pulse per pin Positive Negative	 — —	 1 1	
Charged Device	Number of pulse per pin Positive Negative	 — —	 3 3	
Latch-up	Minimum input voltage limit	—	–2.5	V
	Maximum input voltage limit	—	7.5	V

Table A-3. ESD and Latch-Up Protection Characteristics

Num	C	Rating	Symbol	Min	Max	Unit
1	C	Human Body Model (HBM)	V_{HBM}	2000	—	V
2	C	Charge Device Model (CDM) corner pins Charge Device Model (CDM) edge pins	V_{CDM}	750 500	— —	V
3	C	Latch-up current at T_A = 125°C Positive Negative	I_{LAT}	 +100 –100	 — —	mA
4	C	Latch-up current at T_A = 27°C Positive Negative	I_{LAT}	 +200 –200	 — —	mA

A.1.7 Operating Conditions

This section describes the operating conditions of the device. Unless otherwise noted those conditions apply to all the following data.

NOTE

Please refer to the temperature rating of the device (C, V, M) with regards to the ambient temperature T_A and the junction temperature T_J. For power dissipation calculations refer to Section A.1.8, “Power Dissipation and Thermal Characteristics”.

Table A-4. Operating Conditions

Rating	Symbol	Min	Typ	Max	Unit
I/O, regulator and analog supply voltage	V_{DD35}	3.13	5	5.5	V
NVM logic supply voltage[1]	V_{DDF}	2.7	2.8	2.98	V
Voltage difference V_{DDX} to V_{DDA}	Δ_{VDDX}	refer to Table A-14			

Table A-4. Operating Conditions

Voltage difference V_{DDR} to V_{DDX}	Δ_{VDDR}	-0.1	0	0.1	V
Voltage difference V_{SSX} to V_{SSA}	Δ_{VSSX}	refer to Table A-14			
Voltage difference V_{SS1} , V_{SS2} , V_{SS3} , V_{SSPLL} to V_{SSX}	Δ_{VSS}	-0.1	0	0.1	V
Digital logic supply voltage[1]	V_{DD}	1.72	1.8	1.98	V
PLL supply voltage	V_{DDPLL}	1.72	1.8	1.98	V
Oscillator[2] (Loop Controlled Pierce) (Full Swing Pierce)	f_{osc}	4 2	— —	16 40	MHz
Bus frequency[3]	f_{bus}	0.5	—	40	MHz
Temperature Option **C** Operating junction temperature range Operating ambient temperature range[4]	 T_J T_A	 –40 –40	 — 27	 110 85	°C
Temperature Option **V** Operating junction temperature range Operating ambient temperature range[4]	 T_J T_A	 –40 –40	 — 27	 130 105	°C
Temperature Option **M** Operating junction temperature range Operating ambient temperature range[4]	 T_J T_A	 –40 –40	 — 27	 150 125	°C

1 The device contains an internal voltage regulator to generate the logic and PLL supply out of the I/O supply.
2 This refers to the oscillator base frequency. Typical crystal & resonator tolerances are supported.
3 Please refer to Table A-24 for maximum bus frequency limits with frequency modulation enabled
4 Please refer to Section A.1.8, “Power Dissipation and Thermal Characteristics” for more details about the relation between ambient temperature T_A and device junction temperature T_J.

NOTE

Using the internal voltage regulator, operation is guaranteed in a power down until a low voltage reset assertion.

A.1.8 Power Dissipation and Thermal Characteristics

Power dissipation and thermal characteristics are closely related. The user must assure that the maximum operating junction temperature is not exceeded. The average chip-junction temperature (T_J) in °C can be obtained from:

$$T_J = T_A + (P_D \bullet \Theta_{JA})$$

T_J = Junction Temperature, [°C]

T_A = Ambient Temperature, [°C]

P_D = Total Chip Power Dissipation, [W]

Θ_{JA} = Package Thermal Resistance, [°C/W]

The total power dissipation can be calculated from:

$$P_D = P_{INT} + P_{IO}$$

P_{INT} = Chip Internal Power Dissipation, [W]

$$P_{IO} = \sum_i R_{DSON} \cdot I_{IO_i}^2$$

P_{IO} is the sum of all output currents on I/O ports associated with V_{DDX}, whereby

$$R_{DSON} = \frac{V_{OL}}{I_{OL}} \text{;for outputs driven low}$$

$$R_{DSON} = \frac{V_{DD35} - V_{OH}}{I_{OH}} \text{;for outputs driven high}$$

Two cases with internal voltage regulator enabled and disabled must be considered:

1. Internal voltage regulator disabled

$$P_{INT} = I_{DD} \cdot V_{DD} + I_{DDPLL} \cdot V_{DDPLL} + I_{DDA} \cdot V_{DDA}$$

2. Internal voltage regulator enabled

$$P_{INT} = I_{DDR} \cdot V_{DDR} + I_{DDA} \cdot V_{DDA}$$

Table A-5. Thermal Package Characteristics (9S12XS256)[1]

Num	C	Rating	Symbol	Min	Typ	Max	Unit
LQFP 112							
1	D	Thermal resistance LQFP 112, single sided PCB[2]	θ_{JA}	—	—	62	°C/W
2	D	Thermal resistance LQFP 112, double sided PCB with 2 internal planes[3]	θ_{JA}	—	—	51	°C/W
3	D	Junction to Board LQFP 112	θ_{JB}	—	—	39	°C/W
4	D	Junction to Case LQFP 112[4]	θ_{JC}	—	—	16	°C/W
5	D	Junction to Package Top LQFP 112[5]	Ψ_{JT}	—	—	3	°C/W
QFP 80							
6	D	Thermal resistance QFP 80, single sided PCB[2]	θ_{JA}	—	—	57	°C/W
7	D	Thermal resistance QFP 80, double sided PCB with 2 internal planes[3]	θ_{JA}	—	—	45	°C/W
8	D	Junction to Board QFP 80	θ_{JB}	—	—	29	°C/W
9	D	Junction to Case QFP 80[4]	θ_{JC}	—	—	20	°C/W
10	D	Junction to Package Top QFP 80[5]	Ψ_{JT}	—	—	5	°C/W
LQFP 64							
11	D	Thermal resistance LQFP 64, single sided PCB[2]	θ_{JA}	—	—	68	°C/W
12	D	Thermal resistance LQFP 64, double sided PCB with 2 internal planes[3]	θ_{JA}	—	—	50	°C/W
13	D	Junction to Board LQFP 64	θ_{JB}	—	—	32	°C/W
14	D	Junction to Case LQFP 64[4]	θ_{JC}	—	—	15	°C/W
15	D	Junction to Package Top LQFP 64[5]	Ψ_{JT}	—	—	3	°C/W

1 The values for thermal resistance are achieved by package simulations

2 Junction to ambient thermal resistance, θ_{JA} was simulated to be equivalent to the JEDEC specification JESD51-2 in a horizontal configuration in natural convection.

3 Junction to ambient thermal resistance, θ_{JA} was simulated to be equivalent to the JEDEC specification JESD51-7 in a horizontal configuration in natural convection.

4 Junction to case thermal resistance was simulated to be equivalent to the measured values using the cold plate technique with the cold plate temperature used as the “case” temperature. This basic cold plate measurement technique is described by MIL-STD 883D, Method 1012.1. This is the correct thermal metric to use to calculate thermal performance when the package is being used with a heat sink.

5 Thermal characterization parameter Ψ_{JT} is the “resistance” from junction to reference point thermocouple on top center of the case as defined in JESD51-2. Ψ_{JT} is a useful value to use to estimate junction temperature in a steady state customer enviroment.

Table A-6. Thermal Package Characteristics (9S12XS128)[1]

Num	C	Rating	Symbol	Min	Typ	Max	Unit
LQFP 112							
1	D	Thermal resistance LQFP 112, single sided PCB[2]	θ_{JA}	—	—	58	°C/W
2	D	Thermal resistance LQFP 112, double sided PCB with 2 internal planes[3]	θ_{JA}	—	—	48	°C/W
3	D	Junction to Board LQFP 112	θ_{JB}	—	—	36	°C/W
4	D	Junction to Case LQFP 112[4]	θ_{JC}	—	—	14	°C/W
5	D	Junction to Package Top LQFP 112[5]	Ψ_{JT}	—	—	2	°C/W
QFP 80							
6	D	Thermal resistance QFP 80, single sided PCB[2]	θ_{JA}	—	—	56	°C/W
7	D	Thermal resistance QFP 80, double sided PCB with 2 internal planes[3]	θ_{JA}	—	—	43	°C/W
8	D	Junction to Board QFP 80	θ_{JB}	—	—	28	°C/W
9	D	Junction to Case QFP 80[4]	θ_{JC}	—	—	19	°C/W
10	D	Junction to Package Top QFP 80[5]	Ψ_{JT}	—	—	5	°C/W
LQFP 64							
11	D	Thermal resistance LQFP 64, single sided PCB[2]	θ_{JA}	—	—	64	°C/W
12	D	Thermal resistance LQFP 64, double sided PCB with 2 internal planes[3]	θ_{JA}	—	—	46	°C/W
13	D	Junction to Board LQFP 64	θ_{JB}	—	—	28	°C/W
14	D	Junction to Case LQFP 64[4]	θ_{JC}	—	—	13	°C/W
15	D	Junction to Package Top LQFP 64[5]	Ψ_{JT}	—	—	2	°C/W

1 The values for thermal resistance are achieved by package simulations

2 Junction to ambient thermal resistance, θ_{JA} was simulated to be equivalent to the JEDEC specification JESD51-2 in a horizontal configuration in natural convection.

3 Junction to ambient thermal resistance, θ_{JA} was simulated to be equivalent to the JEDEC specification JESD51-7 in a horizontal configuration in natural convection.

4 Junction to case thermal resistance was simulated to be equivalent to the measured values using the cold plate technique with the cold plate temperature used as the “case” temperature. This basic cold plate measurement technique is described by MIL-STD 883D, Method 1012.1. This is the correct thermal metric to use to calculate thermal performance when the package is being used with a heat sink.

5 Thermal characterization parameter Ψ_{JT} is the “resistance” from junction to reference point thermocouple on top center of the case as defined in JESD51-2. Ψ_{JT} is a useful value to use to estimate junction temperature in a steady state customer enviroment.

A.1.9 I/O Characteristics

This section describes the characteristics of all I/O pins except EXTAL, XTAL, TEST and supply pins.

Table A-7. 3.3-V I/O Characteristics

Conditions are 3.13 V < V_{DD35} < 3.6 V junction temperature from –40°C to +150°C, unless otherwise noted I/O Characteristics for all I/O pins except EXTAL, XTAL,TEST and supply pins.							
Num	**C**	**Rating**	**Symbol**	**Min**	**Typ**	**Max**	**Unit**
1	P	Input high voltage	V_{IH}	0.65*V_{DD35}	—	—	V
	T	Input high voltage	V_{IH}	—	—	V_{DD35} + 0.3	V
2	P	Input low voltage	V_{IL}	—	—	0.35*V_{DD35}	V
	T	Input low voltage	V_{IL}	V_{SS35} – 0.3	—	—	V
3	T	Input hysteresis	V_{HYS}	—	250	—	mV
4a	P	Input leakage current (pins in high impedance input mode)[1] V_{in} = V_{DD35} or V_{SS35} **M** Temperature range -40°C to 150°C **V** Temperature range -40°C to 130°C **C** Temperature range -40°C to 110°C	I_{in}	 –1 –0.75 –0.5	 — — —	 1 0.75 0.5	µA
4b	C	Input leakage current (pins in high impedance input mode) V_{in} = V_{DD35} or V_{SS35} –40°C 27°C 70°C 85°C 100°C 105°C 110°C 120°C 125°C 130°C 150°C	I_{in}	—	— — ±1 ±1 ±8 ±14 ±26 ±32 ±40 ±60 ±74 ±92 ±240	—	nA
5	C	Output high voltage (pins in output mode) Partial drive I_{OH} = –0.75 mA	V_{OH}	V_{DD35} – 0.4	—	—	V
6	P	Output high voltage (pins in output mode) Full drive I_{OH} = –4 mA	V_{OH}	V_{DD35} – 0.4	—	—	V
7	C	Output low voltage (pins in output mode) Partial Drive I_{OL} = +0.9 mA	V_{OL}	—	—	0.4	V
8	P	Output low voltage (pins in output mode) Full Drive I_{OL} = +4.75 mA	V_{OL}	—	—	0.4	V
9	P	Internal pull up resistance V_{IH} min > input voltage > V_{IL} max	R_{PUL}	25	—	50	KΩ
10	P	Internal pull down resistance V_{IH} min > input voltage > V_{IL} max	R_{PDH}	25	—	50	KΩ
11	D	Input capacitance	C_{in}	—	6	—	pF
12	T	Injection current[2] Single pin limit Total device limit, sum of all injected currents	 I_{ICS} I_{ICP}	 –2.5 –25	—	 2.5 25	mA

Table A-7. 3.3-V I/O Characteristics

Conditions are 3.13 V < V_{DD35} < 3.6 V junction temperature from –40°C to +150°C, unless otherwise noted I/O Characteristics for all I/O pins except EXTAL, XTAL,TEST and supply pins.							
13	P	Port H, J, P interrupt input pulse filtered (STOP)[3]	t_{PULSE}	—	—	3	µs
14	P	Port H, J, P interrupt input pulse passed (STOP)[3]	t_{PULSE}	10	—	—	µs
15	D	Port H, J, P interrupt input pulse filtered ($\overline{STOP}$)	t_{PULSE}	—	—	3	tcyc
16	D	Port H, J, P interrupt input pulse passed ($\overline{STOP}$)	t_{PULSE}	4	—	—	tcyc
17	D	$\overline{IRQ}$ pulse width, edge-sensitive mode ($\overline{STOP}$)	PW_{IRQ}	1	—	—	tcyc
18	D	$\overline{XIRQ}$ pulse width with X-bit set (STOP)	PW_{XIRQ}	4	—	—	tosc

1 Maximum leakage current occurs at maximum operating temperature.
2 Refer to Section A.1.4, “Current Injection” for more details
3 Parameter only applies in stop or pseudo stop mode.

Table A-8. 5-V I/O Characteristics

Conditions are 4.5 V < V_{DD35} < 5.5 V junction temperature from –40°C to +150°C, unless otherwise noted
I/O Characteristics for all I/O pins except EXTAL, XTAL,TEST and supply pins.

Num	C	Rating	Symbol	Min	Typ	Max	Unit
1	P	Input high voltage	V_{IH}	0.65*V_{DD35}	—	—	V
	T	Input high voltage	V_{IH}	—	—	V_{DD35} + 0.3	V
2	P	Input low voltage	V_{IL}	—	—	0.35*V_{DD35}	V
	T	Input low voltage	V_{IL}	V_{SS35} – 0.3	—	—	V
3	T	Input hysteresis	V_{HYS}	—	250	—	mV
4a	P	Input leakage current (pins in high impedance input mode)[1] V_{in} = V_{DD35} or V_{SS35} **M** Temperature range -40°C to 150°C **V** Temperature range -40°C to 130°C **C** Temperature range -40°C to 110°C	I_{in}	 –1 –0.75 –0.5	 — — —	 1 0.75 0.5	µA
4b	C	Input leakage current (pins in high impedance input mode) V_{in} = V_{DD35} or V_{SS35} –40°C 27°C 70°C 85°C 100°C 105°C 110°C 120°C 125°C 130°C 150°C	I_{in}	—	— — ±1 ±1 ±8 ±14 ±26 ±32 40 ±60 ±74 ±92 ±240	—	nA
5	C	Output high voltage (pins in output mode) Partial drive I_{OH} = –2 mA	V_{OH}	V_{DD35} – 0.8	—	—	V
6	P	Output high voltage (pins in output mode) Full drive I_{OH} = –10 mA	V_{OH}	V_{DD35} – 0.8	—	—	V
7	C	Output low voltage (pins in output mode) Partial drive I_{OL} = +2 mA	V_{OL}	—	—	0.8	V
8	P	Output low voltage (pins in output mode) Full drive I_{OL} = +10 mA	V_{OL}	—	—	0.8	V
9	P	Internal pull up resistance V_{IH} min > input voltage > V_{IL} max	R_{PUL}	25	—	50	KΩ
10	P	Internal pull down resistance V_{IH} min > input voltage > V_{IL} max	R_{PDH}	25	—	50	KΩ
11	D	Input capacitance	C_{in}	—	6	—	pF
12	T	Injection current[2] Single pin limit Total device Limit, sum of all injected currents	 I_{ICS} I_{ICP}	 –2.5 –25	—	 2.5 25	mA
13	P	Port H, J, P interrupt input pulse filtered (STOP)[3]	t_{PULSE}	—	—	3	µs
14	P	Port H, J, P interrupt input pulse passed (STOP)[3]	t_{PULSE}	10	—	—	µs
15	D	Port H, J, P interrupt input pulse filtered ($\overline{STOP}$)	t_{PULSE}	—	—	3	tcyc

Table A-8. 5-V I/O Characteristics

Conditions are 4.5 V < V_{DD35} < 5.5 V junction temperature from –40°C to +150°C, unless otherwise noted I/O Characteristics for all I/O pins except EXTAL, XTAL,TEST and supply pins.							
16	D	Port H, J, P interrupt input pulse passed ($\overline{STOP}$)	t_{PULSE}	4	—	—	tcyc
17	D	$\overline{IRQ}$ pulse width, edge-sensitive mode ($\overline{STOP}$)	PW_{IRQ}	1	—	—	tcyc
18	D	$\overline{XIRQ}$ pulse width with X-bit set (STOP)	PW_{XIRQ}	4	—	—	tosc

1 Maximum leakage current occurs at maximum operating temperature.
2 Refer to Section A.1.4, “Current Injection” for more details
3 Parameter only applies in stop or pseudo stop mode.

A.1.10 Supply Currents

This section describes the current consumption characteristics of the device as well as the conditions for the measurements.

A.1.10.1 Typical Run Current Measurement Conditions

Since the current consumption of the output drivers is load dependent, all measurements are without output loads and with minimum I/O activity. The currents are measured in single chip mode, S12XCPU code is executed from Flash. V_{DD35}=5V, internal voltage regulator is enabled and the bus frequency is 40MHz using a 4MHz oscillator in loop controlled Pierce mode.

Since the DBG and BDM modules are typically not used in the end application, the supply current values for these modules is not specified.

An overhead of current consumption exists independent of the listed modules, due to voltage regulation and clock logic that is not dedicated to a specific module. This is listed in the table row named “overhead”.

Table A-9 shows the configuration of the peripherals for typical run current.

Table A-9. Module Configurations for Typical Run Supply (VDDR+VDDA) Current V_{DD35}=5V

Peripheral	Configuration
S12XCPU	420 cycle loop: 384 DBNE cycles plus subroutine entry to stimulate stacking (RAM access)
MSCAN	Configured to loop-back mode using a bit rate of 500kbit/s
SPI	Configured to master mode, continuously transmit data (0x55 or 0xAA) at 2Mbit/s
SCI	Configured into loop mode, continuously transmit data (0x55) at speed of 19200 baud
PWM	Configured to toggle its pins at the rate of 1kHz
TIM	The peripheral shall be configured in output compare mode. Pulse accumulator and modulus counter enabled.
ATD	The peripheral is configured to operate at its maximum specified frequency and to continuously convert voltages on all input channels in sequence.
Overhead	VREG supplying 1.8V from a 5V input voltage, PLL on

A.1.10.2 Maximum Run Current Measurement Conditions

Currents are measured in single chip mode, S12XCPU with V_{DD35}=5.5V, internal voltage regulator enabled and a 40MHz bus frequency from a 4MHz input. Characterized parameters are derived using a

4MHz loop controlled Pierce oscillator. Production test parameters are tested with a 4MHz square wave oscillator.

Table A-10 shows the configuration of the peripherals for maximum run current

Table A-10. Module Configurations for Maximum Run Supply (VDDR+VDDA) Current V_{DD35}=5.5V

Peripheral	Configuration
S12XCPU	420 cycle loop: 384 DBNE cycles plus subroutine entry to stimulate stacking (RAM access)
MSCAN	Configured to loop-back mode using a bit rate of 1Mbit/s
SPI	Configured to master mode, continuously transmit data (0x55 or 0xAA) at 4Mbit/s
SCI	Configured into loop mode, continuously transmit data (0x55) at speed of 57600 baud
PWM	Configured to toggle its pins at the rate of 40kHz
TIM	The peripheral shall be configured in output compare mode. Pulse accumulator and modulus counter enabled.
ATD	The peripheral is configured to operate at its maximum specified frequency and to continuously convert voltages on all input channels in sequence.
Overhead	VREG supplying 1.8V from a 5V input voltage, PLL on

A.1.10.3 Stop Current Conditions

Unbonded ports must be correctly initialized to prevent current consumption due to floating inputs. Typical Stop current is measured with V_{DD35}=5V, maximum Stop current is measured with V_{DD35}=5.5V. Pseudo Stop currents are measured with the oscillator configured for 4MHz LCP mode. Production test parameters are tested with a 4MHz square wave oscillator.

A.1.10.4 Measurement Results

Table A-11. Module Run Supply Currents

Conditions are shown in Table A-9 at ambient temperature unless otherwise noted						
Num	**C**	**Rating**	**Min**	**Typ**	**Max**	**Unit**
1	T	S12XCPU	—	1.1	—	mA
2	T	MSCAN	—	0.5	—	
3	T	SPI	—	0.4	—	
4	T	SCI	—	0.6	—	
5	T	PWM	—	0.9	—	
6	T	TIM	—	0.3	—	
7	T	ATD	—	1.7	—	
8	T	Overhead	—	13.6	—	

Table A-12. Run and Wait Current Characteristics

Conditions are shown in Table A-4 unless otherwise noted

Num	C	Rating	Symbol	Min	Typ	Max	Unit
Run supply current (No external load, Peripheral Configuration see Table A-10.)							
1	P	Peripheral Set[1] f_{osc}=4MHz, f_{bus}=40MHz	I_{DD35}	—	—	32	mA
1a	P	Peripheral Set[1] Device 9S12XS256 f_{osc}=4MHz, f_{bus}=40MHz	I_{DD35}	—	—	35	mA
Run supply current (No external load, Peripheral Configuration see Table A-9.)							
2		Peripheral Set[1]	I_{DD35}				mA
	C	f_{osc}=4MHz, f_{bus}=40MHz		—	22	—	
	T	f_{osc}=4MHz, f_{bus}=20MHz		—	12.5	—	
	T	f_{osc}=4MHz, f_{bus}=8MHz		—	7	—	
3		Peripheral Set[2]					
	T	f_{osc}=4MHz, f_{bus}=40MHz		—	21	—	
	T	f_{osc}=4MHz, f_{bus}=20MHz		—	12	—	
	T	f_{osc}=4MHz, f_{bus}=8MHz		—	7	—	
4		Peripheral Set[3]					
	T	f_{osc}=4MHz, f_{bus}=40MHz		—	21	—	
	T	f_{osc}=4MHz, f_{bus}=20MHz		—	11	—	
	T	f_{osc}=4MHz, f_{bus}=8MHz		—	6	—	
5		Peripheral Set[4]					
	T	f_{osc}=4MHz, f_{bus}=40MHz		—	21	—	
	T	f_{osc}=4MHz, f_{bus}=20MHz		—	11	—	
	T	f_{osc}=4MHz, f_{bus}=8MHz		—	6	—	
6		Peripheral Set[5]					
	T	f_{osc}=4MHz, f_{bus}=40MHz		—	21	—	
	T	f_{osc}=4MHz, f_{bus}=20MHz		—	11	—	
	T	f_{osc}=4MHz, f_{bus}=8MHz		—	5	—	
Wait supply current							
7	P	Peripheral Set[1] ,PLL on	I_{DDW}	—	11	22	mA
7a	P	Peripheral Set[1] ,PLL on, Device 9S12XS256		—	16	24	
8		Peripheral Set[2]					
	T	f_{osc}=4MHz, f_{bus}=40MHz		—	10	—	
	T	f_{osc}=4MHz, f_{bus}=8MHz		—	5.4	—	
9	C	All modules disabled, RTI enabled, PLL off		—	1.8	4	

1 The following peripherals are on: ATD0/TIM/PWM/SPI0/SCI0-SCI1/CAN0
2 The following peripherals are on: ATD0/TIM/PWM/SPI0/SCI0-SCI1
3 The following peripherals are on: ATD0/TIM/PWM/SPI0
4 The following peripherals are on: ATD0/TIM/PWM
5 The following peripherals are on: ATD0/TIM

Table A-13. Pseudo Stop and Full Stop Current

Conditions are shown in Table A-4 unless otherwise noted

Num	C	Rating	Symbol	Min	Typ	Max	Unit
Pseudo stop current (API, RTI, and COP disabled) PLL off, LCP mode							
10a	C	–40°C	I_{DDPS}	—	155	300	µA
	C	27°C		—	171	400	
	C	70°C		—	199	—	
	C	85°C		—	216	—	
	C	105°C		—	233	—	
	C	110°C		—	270	—	
	C	130°C		—	350	—	
	C	150°C		—	452	—	
Pseudo stop current (API, RTI, and COP disabled) PLL off, FSP mode							
10b	P	–40°C	I_{DDPS}	—	60	80	µA
	P	27°C		—	70	100	
	P	110°C		—	160	2400	
	P	130°C		—	210	2400	
	P	150°C		—	400	2400	
Pseudo stop current (API, RTI, and COP enabled) PLL off, LCP mode							
11	C	27°C	I_{DDPS}	—	186	—	µA
	C	70°C		—	209	—	
	C	85°C		—	245	—	
	C	105°C		—	270	—	
	C	125°C		—	383	—	
	C	150°C		—	487	—	
Stop Current							
12	P	–40°C	I_{DDS}	—	20	60	µA
	P	27°C		—	25	80	
	C	70°C		—	40	—	
	C	85°C		—	65	—	
	C	105°C		—	80	—	
	C	110°C		—	95	—	
	C	125°C		—	220	—	
	C	130°C		—	250	—	
	P	150°C		—	380	2000	
Stop Current (API active)							
13	T	–40°C	I_{DDS}	—	25	—	µA
	T	27°C		—	40	—	
	T	85°C		—	70	—	
	T	110°C		—	100	—	
	T	130°C		—	255	—	
Stop Current (ATD active)							
14	T	27°C	I_{DDS}	—	190	—	µA
	T	85°C		—	230	—	
	T	125°C		—	400	—	

A.2 ATD Characteristics

This section describes the characteristics of the analog-to-digital converter.

A.2.1 ATD Operating Characteristics

The Table A-14 and Table A-15 show conditions under which the ATD operates.

The following constraints exist to obtain full-scale, full range results:

$$V_{SSA} \leq V_{RL} \leq V_{IN} \leq V_{RH} \leq V_{DDA}.$$

This constraint exists since the sample buffer amplifier can not drive beyond the power supply levels that it ties to. If the input level goes outside of this range it will effectively be clipped.

Table A-14. ATD Operating Characteristics

Conditions are shown in Table A-4 unless otherwise noted, supply voltage 3.13 V < V_{DDA} < 5.5 V							
Num	**C**	**Rating**	**Symbol**	**Min**	**Typ**	**Max**	**Unit**
1	D	Reference potential Low High	 V_{RL} V_{RH}	 V_{SSA} $V_{DDA}/2$	 — —	 $V_{DDA}/2$ V_{DDA}	 V V
2	D	Voltage difference V_{DDX} to V_{DDA}	Δ_{VDDX}	–2.35	0	0.1	V
3	D	Voltage difference V_{SSX} to V_{SSA}	Δ_{VSSX}	–0.1	0	0.1	V
4	C	Differential reference voltage[1]	V_{RH}-V_{RL}	3.13	5.0	5.5	V
5	C	ATD Clock Frequency (derived from bus clock via the prescaler bus)	f_{ATDCLk}	0.25	—	8.3	MHz
6	P	ATD Clock Frequency in Stop mode (internal generated temperature and voltage dependent clock, ICLK)		0.6	1	1.7	MHz
7	D	ADC conversion in stop, recovery time[2]	$t_{ATDSTPRCV}$	—	—	1.5	µs
8	D	ATD Conversion Period[3] 12 bit resolution: 10 bit resolution: 8 bit resolution:	 N_{CONV12} N_{CONV10} N_{CONV8}	 20 19 17	 — — —	 42 41 39	 ATD clock cycles

1 Full accuracy is not guaranteed when differential voltage is less than 4.50 V
2 When converting in Stop Mode (ICLKSTP=1) an ATD Stop Recovery time tATDSTPRCV is required to switch back to bus clock based ATDCLK when leaving Stop Mode. Do not access ATD registers during this time.
3 The minimum time assumes a sample time of 4 ATD clock cycles. The maximum time assumes a sample time of 24 ATD clock cycles and the discharge feature (SMP_DIS) enabled, which adds 2 ATD clock cycles.

A.2.2 Factors Influencing Accuracy

Source resistance, source capacitance and current injection have an influence on the accuracy of the ATD. A further factor is that PortAD pins that are configured as output drivers switching.

A.2.2.1 Port AD Output Drivers Switching

PortAD output drivers switching can adversely affect the ATD accuracy whilst converting the analog voltage on other PortAD pins because the output drivers are supplied from the VDDA/VSSA ATD supply pins. Although internal design measures are implemented to minimize the affect of output driver noise, it

is recommended to configure PortAD pins as outputs only for low frequency, low load outputs. The impact on ATD accuracy is load dependent and not specified. The values specified are valid under condition that no PortAD output drivers switch during conversion.

A.2.2.2 Source Resistance

Due to the input pin leakage current as specified in Table A-7 and Table A-8 in conjunction with the source resistance there will be a voltage drop from the signal source to the ATD input. The maximum source resistance R_S specifies results in an error (10-bit resolution) of less than 1/2 LSB (2.5 mV) at the maximum leakage current. If device or operating conditions are less than worst case or leakage-induced error is acceptable, larger values of source resistance of up to 10Kohm are allowed.

A.2.2.3 Source Capacitance

When sampling an additional internal capacitor is switched to the input. This can cause a voltage drop due to charge sharing with the external and the pin capacitance. For a maximum sampling error of the input voltage ≤ 1LSB (10-bit resilution), then the external filter capacitor, $C_f \geq 1024 * (C_{INS} – C_{INN})$.

A.2.2.4 Current Injection

There are two cases to consider.

1. A current is injected into the channel being converted. The channel being stressed has conversion values of $3FF (in 10-bit mode) for analog inputs greater than V_{RH} and $000 for values less than V_{RL} unless the current is higher than specified as disruptive condition.
2. Current is injected into pins in the neighborhood of the channel being converted. A portion of this current is picked up by the channel (coupling ratio K), This additional current impacts the accuracy of the conversion depending on the source resistance.

   The additional input voltage error on the converted channel can be calculated as:

   $$V_{ERR} = K * R_S * I_{INJ}$$

   with I_{INJ} being the sum of the currents injected into the two pins adjacent to the converted channel.

Table A-15. ATD Electrical Characteristics

Conditions are shown in Table A-4 unless otherwise noted							
Num	**C**	**Rating**	**Symbol**	**Min**	**Typ**	**Max**	**Unit**
1	C	Max input source resistance[1]	R_S	—	—	1	KΩ
2	D	Total input capacitance Non sampling Total input capacitance Sampling	C_{INN} C_{INS}	— —	— —	10 16	pF
3	D	Input internal Resistance	R_{INA}	—	5	15	kΩ
4	C	Disruptive analog input current	I_{NA}	–2.5	—	2.5	mA
5	C	Coupling ratio positive current injection	K_p	—	—	1E-4	A/A
6	C	Coupling ratio negative current injection	K_n	—	—	3E-3	A/A

1 Refer to A.2.2.2 for further information concerning source resistance

A.2.3 ATD Accuracy

Table A-16 and Table A-17 specifies the ATD conversion performance excluding any errors due to current injection, input capacitance and source resistance.

A.2.3.1 ATD Accuracy Definitions

For the following definitions see also Figure A-1.
Differential non-linearity (DNL) is defined as the difference between two adjacent switching steps.

$$DNL(i) = \frac{V_i - V_{i-1}}{1LSB} - 1$$

The integral non-linearity (INL) is defined as the sum of all DNLs:

$$INL(n) = \sum_{i=1}^{n} DNL(i) = \frac{V_n - V_0}{1LSB} - n$$

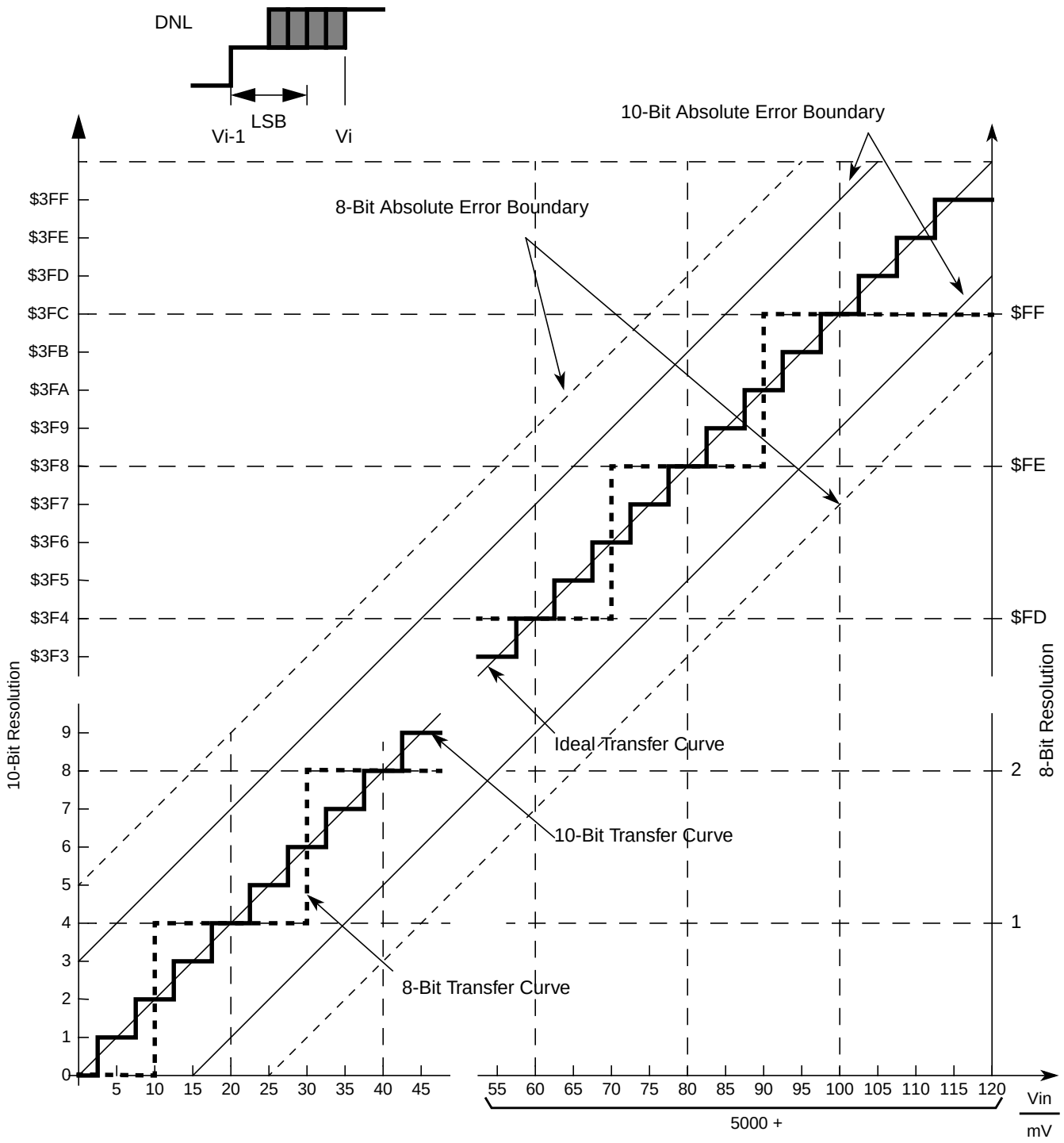

Figure A-1. ATD Accuracy Definitions

NOTE

Figure A-1 shows only definitions, for specification values refer to Table A-16 and Table A-17.

Table A-16. ATD Conversion Performance 5V range

Conditions are shown in Table A-4. unless otherwise noted. $V_{REF} = V_{RH} - V_{RL} = 5.12V$. $f_{ATDCLK} = 8.0MHz$
The values are tested to be valid with no PortAD output drivers switching simultaneous with conversions.

Num	C	Rating[1,2]		Symbol	Min	Typ	Max	Unit
1	P	Resolution	12-Bit	LSB	—	1.25	—	mV
2	P	Differential Nonlinearity	12-Bit	DNL	-4	±2	4	counts
3	P	Integral Nonlinearity	12-Bit	INL	-5	±2.5	5	counts
4	P	Absolute Error[3]	12-Bit	AE	-7	±4	7	counts
5	C	Resolution	10-Bit	LSB	—	5	—	mV
6	C	Differential Nonlinearity	10-Bit	DNL	-1	±0.5	1	counts
7	C	Integral Nonlinearity	10-Bit	INL	-2	±1	2	counts
8	C	Absolute Error[3]	10-Bit	AE	-3	±2	3	counts
9	C	Resolution	8-Bit	LSB	—	20	—	mV
10	C	Differential Nonlinearity	8-Bit	DNL	-0.5	±0.3	0.5	counts
11	C	Integral Nonlinearity	8-Bit	INL	-1	±0.5	1	counts
12	C	Absolute Error[3]	8-Bit	AE	-1.5	±1	1.5	counts

1 The 8-bit and 10-bit mode operation is structurally tested in production test. Absolute values are tested in 12-bit mode.
2 Better performance is possible using specially designed multi-layer PCBs or averaging techniques.
3 These values include the quantization error which is inherently 1/2 count for any A/D converter.

Table A-17. ATD Conversion Performance 3.3V range

Conditions are shown in Table A-4. unless otherwise noted. $V_{REF} = V_{RH} - V_{RL} = 3.3V$. $f_{ATDCLK} = 8.0MHz$
The values are tested to be valid with no PortAD output drivers switching simultaneous with conversions.

Num	C	Rating[1,2]		Symbol	Min	Typ	Max	Unit
1	P	Resolution	12-Bit	LSB	—	0.80	—	mV
2	P	Differential Nonlinearity	12-Bit	DNL	-6	±3	6	counts
3	P	Integral Nonlinearity	12-Bit	INL	-7	±3	7	counts
4	P	Absolute Error[3]	12-Bit	AE	-8	±4	8	counts
5	C	Resolution	10-Bit	LSB	—	3.22	—	mV
6	C	Differential Nonlinearity	10-Bit	DNL	-1.5	±1	1.5	counts
7	C	Integral Nonlinearity	10-Bit	INL	-2	±1	2	counts
8	C	Absolute Error[3]	10-Bit	AE	-3	±2	3	counts
9	C	Resolution	8-Bit	LSB	—	12.89	—	mV
10	C	Differential Nonlinearity	8-Bit	DNL	-0.5	±0.3	0.5	counts
11	C	Integral Nonlinearity	8-Bit	INL	-1	±0.5	1	counts
12	C	Absolute Error[3]	8-Bit	AE	-1.5	±1	1.5	counts

1 The 8-bit and 10-bit mode operation is structurally tested in production test. Absolute values are tested in 12-bit mode.
2 Better performance is possible using specially designed multi-layer PCBs or averaging techniques.
3 These values include the quantization error which is inherently 1/2 count for any A/D converter.

A.3 NVM, Flash

A.3.1 Timing Parameters

The time base for all NVM program or erase operations is derived from the oscillator. A minimum oscillator frequency f_{NVMOSC} is required for performing program or erase operations. The NVM modules do not have any means to monitor the frequency and will not prevent program or erase operation at frequencies above or below the specified minimum. When attempting to program or erase the NVM modules at a lower frequency, a full program or erase transition is not assured.

The program and erase operations are timed using a clock derived from the oscillator using the FCLKDIV register. The frequency of this clock must be set within the limits specified as f_{NVMOP}.

The minimum program and erase times shown in Table A-18 are calculated for maximum f_{NVMOP} and maximum f_{NVMBUS} unless otherwise shown. The maximum times are calculated for minimum f_{NVMOP}

A.3.1.1 Erase Verify All Blocks (Blank Check) (FCMD=0x01)

The time it takes to perform a blank check is dependant on the location of the first non-blank word starting at relative address zero. It takes one bus cycle per phrase to verify plus a setup of the command. Assuming that no non blank location is found, then the erase verify all blocks is given by.

$$t_{check} = 33500 \cdot \frac{1}{f_{NVMBUS}}$$

A.3.1.2 Erase Verify Block (Blank Check) (FCMD=0x02)

The time it takes to perform a blank check is dependant on the location of the first non-blank word starting at relative address zero. It takes one bus cycle per phrase to verify plus a setup of the command. Assuming that no non blank location is found, then the erase verify time for a single 256K NVM array is given by

$$t_{check} = 33500 \cdot \frac{1}{f_{NVMBUS}}$$

For a 128K NVM or D-Flash array the erase verify time is given by

$$t_{check} = 17200 \cdot \frac{1}{f_{NVMBUS}}$$

A.3.1.3 Erase Verify P-Flash Section (FCMD=0x03)

The maximum time depends on the number of phrases being verified (N_{VP})

$$t_{check} = (752 + N_{VP}) \cdot \frac{1}{f_{NVMBUS}}$$

A.3.1.4 Read Once (FCMD=0x04)

The maximum read once time is given by

$$t = (400) \cdot \frac{1}{f_{NVMBUS}}$$

A.3.1.5 Program P-Flash (FCMD=0x06)

The programming time for a single phrase of four P-Flash words + associated eight ECC bits is dependant on the bus frequency as a well as on the frequency f_{NVMOP} and can be calculated according to the following formulas.

The typical phrase programming time can be calculated using the following equation

$$t_{bwpgm} = 128 \cdot \frac{1}{f_{NVMOP}} + 1725 \cdot \frac{1}{f_{NVMBUS}}$$

The maximum phrase programming time can be calculated using the following equation

$$t_{bwpgm} = 130 \cdot \frac{1}{f_{NVMOP}} + 2125 \cdot \frac{1}{f_{NVMBUS}}$$

A.3.1.6 P-Flash Program Once (FCMD=0x07)

The maximum P-Flash Program Once time is given by

$$t_{bwpgm} \approx 162 \cdot \frac{1}{f_{NVMOP}} + 2400 \cdot \frac{1}{f_{NVMBUS}}$$

A.3.1.7 Erase All Blocks (FCMD=0x08)

Erasing all blocks takes:

$$t_{mass} \approx 100100 \cdot \frac{1}{f_{NVMOP}} + 35000 \cdot \frac{1}{f_{NVMBUS}}$$

A.3.1.8 Erase P-Flash Block (FCMD=0x09)

Erasing a 256K NVM block takes

$$t_{mass} \approx 100100 \cdot \frac{1}{f_{NVMOP}} + 70000 \cdot \frac{1}{f_{NVMBUS}}$$

Erasing a 128K NVM block takes

$$t_{mass} \approx 100100 \cdot \frac{1}{f_{NVMOP}} + 35000 \cdot \frac{1}{f_{NVMBUS}}$$

A.3.1.9 Erase P-Flash Sector (FCMD=0x0A)

The typical time to erase a1024-byte P-Flash sector can be calculated using

$$t_{era} = \left(20020 \cdot \frac{1}{f_{NVMOP}}\right) + \left(700 \cdot \frac{1}{f_{NVMBUS}}\right)$$

The maximum time to erase a1024-byte P-Flash sector can be calculated using

$$t_{era} = \left(20020 \cdot \frac{1}{f_{NVMOP}}\right) + \left(1100 \cdot \frac{1}{f_{NVMBUS}}\right)$$

A.3.1.10 Unsecure Flash (FCMD=0x0B)

The maximum time for unsecuring the flash is given by

$$t_{uns} = \left(100100 \cdot \frac{1}{f_{NVMOP}} + 70000 \cdot \frac{1}{f_{NVMBUS}}\right)$$

A.3.1.11 Verify Backdoor Access Key (FCMD=0x0C)

The maximum verify backdoor access key time is given by

$$t = 400 \cdot \frac{1}{f_{NVMBUS}}$$

A.3.1.12 Set User Margin Level (FCMD=0x0D)

The maximum set user margin level time is given by

$$t = 350 \cdot \frac{1}{f_{NVMBUS}}$$

A.3.1.13 Set Field Margin Level (FCMD=0x0E)

The maximum set field margin level time is given by

$$t = 350 \cdot \frac{1}{f_{NVMBUS}}$$

A.3.1.14 Erase Verify D-Flash Section (FCMD=0x10)

Erase Verify D-Flash for a given number of words N_W is given by .

$$t_{check} \approx (840 + N_W) \cdot \frac{1}{f_{NVMBUS}}$$

A.3.1.15 D-Flash Programming (FCMD=0x11)

D-Flash programming time is dependent on the number of words being programmed and their location with respect to a row boundary, because programming across a row boundary requires extra steps. The D-Flash programming time is specified for different cases (1,2,3,4 words and 4 words across a row boundary) at a 40MHz bus frequency. The typical programming time can be calculated using the following equation, whereby N_w denotes the number of words; BC=0 if no boundary is crossed and BC=1 if a boundary is crossed.

$$t_{dpgm} = \left((15 + (54 \cdot N_w) + (16 \cdot BC)) \cdot \frac{1}{f_{NVMOP}}\right) + \left((460 + (640 \cdot N_W) + (500 \cdot BC)) \cdot \frac{1}{f_{NVMBUS}}\right)$$

The maximum programming time can be calculated using the following equation

$$t_{dpgm} = \left((15 + (56 \cdot N_w) + (16 \cdot BC)) \cdot \frac{1}{f_{NVMOP}}\right) + \left((460 + (840 \cdot N_W) + (500 \cdot BC)) \cdot \frac{1}{f_{NVMBUS}}\right)$$

A.3.1.16 Erase D-Flash Sector (FCMD=0x12)

Typical D-Flash sector erase times are those expected on a new device, where no margin verify fails occur. They can be calculated using the following equation.

$$t_{eradf} \approx 5025 \cdot \frac{1}{f_{NVMOP}} + 700 \cdot \frac{1}{f_{NVMBUS}}$$

Maximum D-Fash sector erase times can be calculated using the following equation.

$$t_{eradf} \approx 20100 \cdot \frac{1}{f_{NVMOP}} + 3300 \cdot \frac{1}{f_{NVMBUS}}$$

The D-Flash sector erase time on a new device is ~5ms and can extend to 20ms as the flash is cycled.

Table A-18. NVM Timing Characteristics

Conditions are as shown in Table A-4, with 40MHz bus and f_{NVMOP}= 1MHz unless otherwise noted.							
Num	**C**	**Rating**	**Symbol**	**Min**	**Typ**	**Max**	**Unit**
1	D	External oscillator clock	f_{NVMOSC}	2	—	40[1]	MHz
2	D	Bus frequency for programming or erase operations	f_{NVMBUS}	1	—	40	MHz
3	D	Operating frequency	f_{NVMOP}	800	—	1050	kHz
4	D	P-Flash phrase programming	t_{bwpgm}	—	171	183	µs
6	P	P-Flash sector erase time	t_{era}	—	20	21	ms
7	P	Erase All Blocks (Mass erase) time	t_{mass}	—	101	102	ms
7a	D	Unsecure Flash	t_{uns}	—	101	102	ms
8	D	P-Flash erase verify (blank check) time[2]	t_{check}	—	—	33500[2]	t_{cyc}
9a	D	D-Flash word programming 1 word	t_{dpgm}	—	97	104	µs
9b	D	D-Flash word programming 2 words	t_{dpgm}	—	167	181	µs
9c	D	D-Flash word programming 3 words	t_{dpgm}	—	237	258	µs
9d	D	D-Flash word programming 4 words	t_{dpgm}	—	307	335	µs
9e	D	D-Flash word programming 4 words crossing row boundary	t_{dpgm}	—	335	363	µs
10	D	D-Flash sector erase time	t_{eradf}	—	5.2[3]	21	ms
11	D	D-Flash erase verify (blank check) time	t_{check}	—	—	17500	t_{cyc}

1 Restrictions for oscillator in crystal mode apply.
2 Valid for both “Erase verify all” or “Erase verify block” on 256K block without failing locations
3 This is a typical value for a new device

A.3.2 NVM Reliability Parameters

The reliability of the NVM blocks is guaranteed by stress test during qualification, constant process monitors and burn-in to screen early life failures.

The data retention and program/erase cycling failure rates are specified at the operating conditions noted. The program/erase cycle count on the sector is incremented every time a sector or mass erase event is executed.

The standard shipping condition for both the D-Flash and P-Flash memory is erased with security disabled. However it is recommended that each block or sector is erased before factory programming to ensure that the full data retention capability is achieved. Data retention time is measured from the last erase operation.

Table A-19. NVM Reliability Characteristics

Conditions are shown in Table A-4 unless otherwise noted							
Num	**C**	**Rating**	**Symbol**	**Min**	**Typ**	**Max**	**Unit**
P-Flash Array							
1	C	Data retention at an average junction temperature of T_{Javg} = 85°C[1] after up to 10,000 program/erase cycles	$t_{PNVMRET}$	15	100[2]	—	Years
2	C	Data retention at an average junction temperature of T_{Javg} = 85°C[3] after less than 100 program/erase cycles	$t_{PNVMRET}$	20	100[2]	—	Years
3	C	P-Flash number of program/erase cycles (-40°C ≤ tj ≤ 150°C)	n_{PFLPE}	10K	100K[3]	—	Cycles
D-Flash Array							
4	C	Data retention at an average junction temperature of T_{Javg} = 85°C[3] after up to 50,000 program/erase cycles	$t_{DNVMRET}$	5	100[2]	—	Years
5	C	Data retention at an average junction temperature of T_{Javg} = 85°C[3] after less than 10,000 program/erase cycles	$t_{DNVMRET}$	10	100[2]	—	Years
6	C	Data retention at an average junction temperature of T_{Javg} = 85°C[3] after less than 100 program/erase cycles	$t_{DNVMRET}$	20	100[2]	—	Years
7	C	D-Flash number of program/erase cycles (-40°C ≤ tj ≤ 150°C)	n_{DFLPE}	50K	500K[3]	—	Cycles

1 T_{Javg} does not exceed 85°C in a typical temperature profile over the lifetime of a consumer, industrial or automotive application.

2 Typical data retention values are based on intrinsic capability of the technology measured at high temperature and de-rated to 25°C using the Arrhenius equation. For additional information on how Freescale defines Typical Data Retention, please refer to Engineering Bulletin EB618

3 T_{Javg} does not exceed 85°C in a typical temperature profile over the lifetime of a consumer, industrial or automotive application.

A.4 Voltage Regulator

Table A-20. Voltage Regulator Electrical Characteristics

Conditions are shown in Table A-4 unless otherwise noted							
Num	**C**	**Characteristic**	**Symbol**	**Min**	**Typical**	**Max**	**Unit**
1	P	Input Voltages	$V_{VDDR,A}$	3.13	—	5.50	V
2	P	Output Voltage Core Full Performance Mode Reduced Power Mode (MCU STOP mode)	V_{DD}	1.72 —	1.84 1.60	1.98 —	V V
3	P	Output Voltage Flash Full Performance Mode Reduced Power Mode (MCU STOP mode)	V_{DDF}	2.60 —	2.82 2.20	2.98 —	V V
4	P	Output Voltage PLL Full Performance Mode Reduced Power Mode (MCU STOP mode)	V_{DDPLL}	1.72 —	1.84 1.60	1.98 —	V V
5	P	Low Voltage Interrupt[1] Assert Level Deassert Level	V_{LVIA} V_{LVID}	4.04 4.19	4.23 4.38	4.40 4.49	V V
6	P	VDDX Low Voltage Reset [2] [3] Assert Level Deassert Level	V_{LVRXA} V_{LVRXD}	— —	3.02 —	— 3.13	V V
7	C	Trimmed API internal clock[4] $\Delta f / f_{nominal}$	df_{API}	-5	—	+5	%
8	D	The first period after enabling the counter by APIFE might be reduced by API start up delay	t_{sdel}	—	—	100	µs
9	T	Temperature Sensor Slope	dV_{TS}	5.05	5.25	5.45	mV/°C
10	T	High Temperature Interrupt Assert[5] Assert (VREGHTTR=$88) Deassert (VREGHTTR=$88)	T_{HTIA} T_{HTID}	120 110	132 122	144 134	°C °C
11	P	Bandgap Reference Voltage	V_{BG}	1.13	1.21	1.32	V

1 Monitors VDDA, active only in Full Performance Mode. Indicates I/O & ADC performance degradation due to low supply voltage.
2 Device functionality is guaranteed on power down to the LVR assert level
3 Monitors VDDX, active only in Full Performance Mode. MCU is monitored by the POR in RPM (see Figure A-2)
4 The API Trimming bits must be set that the minimum period equals to 0.2 ms.
5 A hysteresis is guaranteed by design

A.5 Output Loads

A.5.1 Resistive Loads

The voltage regulator is intended to supply the internal logic and oscillator. It allows no external DC loads.

A.5.2 Capacitive Loads

The capacitive loads are specified in Table A-21. Ceramic capacitors with X7R dielectricum are required.

Table A-21. S12XS family - Capacitive Loads

Num	Characteristic	Symbol	Min	Recommended	Max	Unit
1	VDD/VDDF external capacitive load	C_{DDext}	176	220	264	nF
3	VDDPLL external capacitive load	$C_{DDPLLext}$	80	220	264	nF

A.5.3 Chip Power-up and Voltage Drops

LVI (low voltage interrupt), POR (power-on reset) and LVRs (low voltage reset) handle chip power-up or drops of the supply voltage. Their function is shown in Figure A-2 .

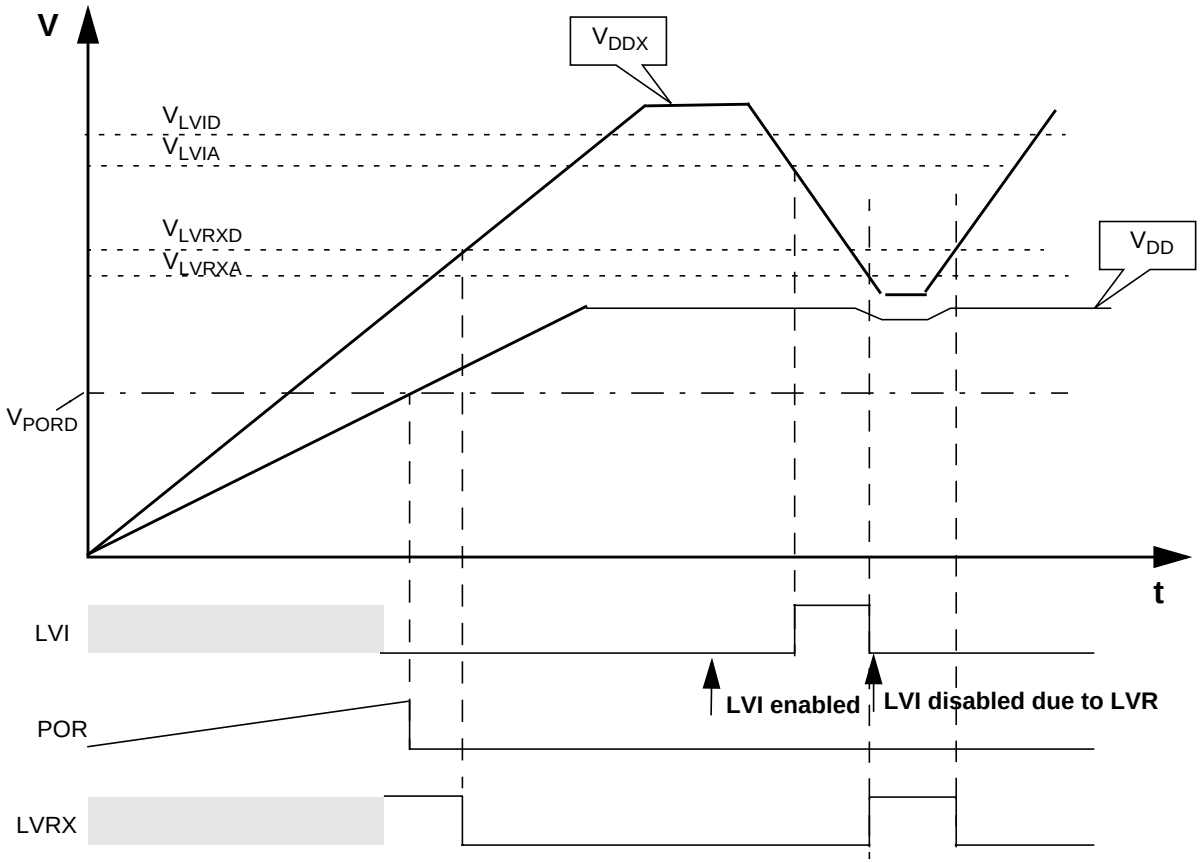

Figure A-2. S12XS family - Chip Power-up and Voltage Drops (not scaled)

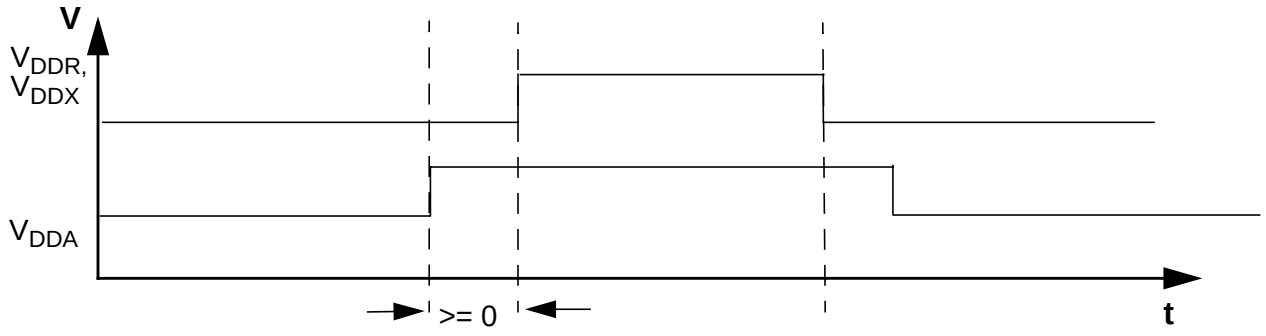

Figure A-3. S12XS family Power Sequencing

During power sequencing V_{DDA} can be powered up before V_{DDR}, V_{DDX}.
V_{DDR} and V_{DDX} must be powered up together adhering to the operating conditions differential.
V_{RH} power up must follow V_{DDA} to avoid current injection.

A.6 Reset, Oscillator and PLL

This section summarizes the electrical characteristics of the various startup scenarios for oscillator and phase-locked loop (PLL).

A.6.1 Startup

Table A-22 summarizes several startup characteristics explained in this section. Detailed description of the startup behavior can be found in the Clock and Reset Generator (CRG) block description

Table A-22. Startup Characteristics

Conditions are shown in Table A-4unless otherwise noted							
Num	**C**	**Rating**	**Symbol**	**Min**	**Typ**	**Max**	**Unit**
1	D	Reset input pulse width, minimum input time	PW_{RSTL}	2	—	—	t_{osc}
2	D	Startup from reset	n_{RST}	192	—	196	n_{osc}
3	D	Wait recovery startup time	t_{WRS}	—	—	14	t_{cyc}
4	D	Fast wakeup from STOP[1]	t_{fws}	—	50	100	µs

1 Including voltage regulator startup; V_{DD} /V_{DDF} filter capacitors 220 nF, V_{DD35} = 5 V, T= 25°C

A.6.1.1 POR

The release level V_{PORR} and the assert level V_{PORA} are derived from the V_{DD} supply. They are also valid if the device is powered externally. After releasing the POR reset the oscillator and the clock quality check are started. If after a time t_{CQOUT} no valid oscillation is detected, the MCU will start using the internal self clock. The fastest startup time possible is given by n_{uposc}.

A.6.1.2 SRAM Data Retention

Provided an appropriate external reset signal is applied to the MCU, preventing the CPU from executing code when V_{DD35} is out of specification limits, the SRAM contents integrity is guaranteed if after the reset the PORF bit in the CRG flags register has not been set.

A.6.1.3 External Reset

When external reset is asserted for a time greater than PW_{RSTL} the CRG module generates an internal reset, and the CPU starts fetching the reset vector without doing a clock quality check, if there was an oscillation before reset.

A.6.1.4 Stop Recovery

Out of stop the controller can be woken up by an external interrupt. A clock quality check as after POR is performed before releasing the clocks to the system.

If the MCU is woken-up by an interrupt and the fast wake-up feature is enabled (FSTWKP = 1 and SCME = 1), the system will resume operation in self-clock mode after t_{fws}.

A.6.1.5 Pseudo Stop and Wait Recovery

The recovery from pseudo stop and wait is essentially the same since the oscillator is not stopped in both modes. The controller can be woken up by internal or external interrupts. After t_{wrs} the CPU starts fetching the interrupt vector.

A.6.2 Oscillator

Table A-23. Oscillator Characteristics

Conditions are shown in Table A-4. unless otherwise noted							
Num	**C**	**Rating**	**Symbol**	**Min**	**Typ**	**Max**	**Unit**
1a	C	Crystal oscillator range (loop controlled Pierce)	f_{OSC}	4.0	—	16	MHz
1b	C	Crystal oscillator range (full swing Pierce) [1,2]	f_{OSC}	2.0	—	40	MHz
2	P	Startup Current	i_{OSC}	100	—	—	µA
3a	C	Oscillator start-up time (LCP, 4MHz)[3]	t_{UPOSC}	—	2.2	10	ms
3b	C	Oscillator start-up time (LCP, 8MHz)[3]	t_{UPOSC}	—	1.1	8	ms
3c	C	Oscillator start-up time (LCP, 16MHz)[3]	t_{UPOSC}	—	0.75	5	ms
4a	C	Oscillator start-up time (full swing Pierce, 2MHz)[3]	t_{UPOSC}	—	5.2	40	ms
4b	C	Oscillator start-up time (full swing Pierce, 4MHz)[3]	t_{UPOSC}	—	3	20	ms
4c	C	Oscillator start-up time (full swing Pierce, 8MHz)[3]	t_{UPOSC}	—	1.8	10	ms
4d	C	Oscillator start-up time (full swing Pierce, 16MHz)[3]	t_{UPOSC}	—	1.2	5	ms
4e	C	Oscillator start-up time (full swing Pierce, 40MHz)[3]	t_{UPOSC}	—	1	4	ms
5	D	Clock Quality check time-out	t_{CQOUT}	0.45	—	2.5	s
6	P	Clock Monitor Failure Assert Frequency	f_{CMFA}	200	400	800	KHz
7	P	External square wave input frequency	f_{EXT}	2.0	—	50	MHz
8	D	External square wave pulse width low	t_{EXTL}	9.5	—	—	ns
9	D	External square wave pulse width high	t_{EXTH}	9.5	—	—	ns
10	D	External square wave rise time	t_{EXTR}	—	—	1	ns
11	D	External square wave fall time	t_{EXTF}	—	—	1	ns
12	D	Input Capacitance (EXTAL, XTAL pins)	C_{IN}	—	7	—	pF
13	P	EXTAL Pin Input High Voltage	$V_{IH,EXTAL}$	$0.75*V_{DDPLL}$	—	—	V
	T	EXTAL Pin Input High Voltage[4]	$V_{IH,EXTAL}$	—	—	V_{DDPLL} + 0.3	V
14	P	EXTAL Pin Input Low Voltage	$V_{IL,EXTAL}$	—	—	$0.25*V_{DDPLL}$	V
	T	EXTAL Pin Input Low Voltage[4]	$V_{IL,EXTAL}$	V_{SSPLL} - 0.3	—	—	V
15	C	EXTAL Pin Input Hysteresis	$V_{HYS,EXTAL}$	—	180	—	mV
16	C	EXTAL Pin oscillation amplitude (loop controlled Pierce)	$V_{PP,EXTAL}$	—	0.9	—	V

1 Depending on the crystal a damping series resistor might be necessary
2 Only valid if full swing Pierce oscillator/external clock mode is selected
3 These values apply for carefully designed PCB layouts with capacitors that match the crystal/resonator requirements..
4 Only applies if EXTAL is externally driven

A.6.3 Phase Locked Loop

A.6.3.1 Jitter Information

With each transition of the clock f_{cmp}, the deviation from the reference clock f_{ref} is measured and input voltage to the VCO is adjusted accordingly.The adjustment is done continuously with no abrupt changes in the clock output frequency. Noise, voltage, temperature and other factors cause slight variations in the control loop resulting in a clock jitter. This jitter affects the real minimum and maximum clock periods as illustrated in Figure A-4.

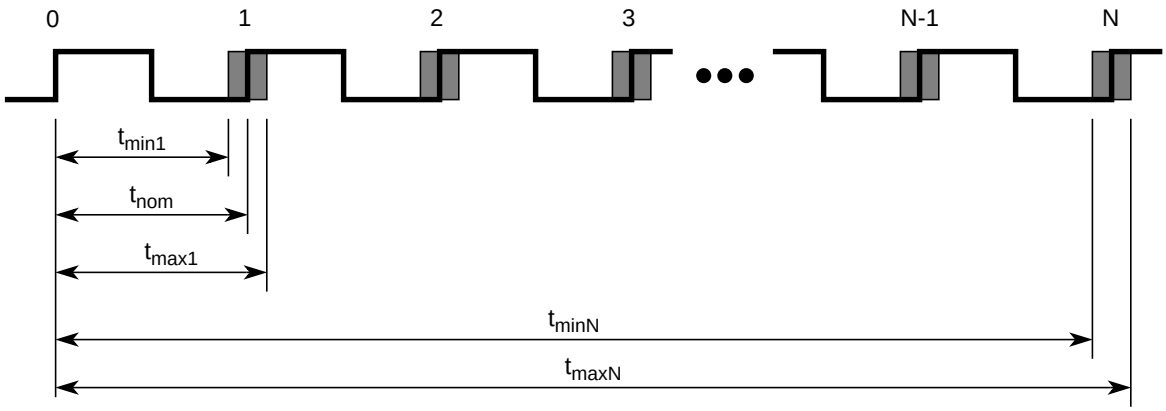

Figure A-4. Jitter Definitions

The relative deviation of t_{nom} is at its maximum for one clock period, and decreases towards zero for larger number of clock periods (N).

Defining the jitter as:

$$J(N) = \max\left(\left|1 - \frac{t_{max}(N)}{N \cdot t_{nom}}\right|, \left|1 - \frac{t_{min}(N)}{N \cdot t_{nom}}\right|\right)$$

For N < 1000, the following equation is a good fit for the maximum jitter:

$$J(N) = \frac{j_1}{\sqrt{N}} + j_2$$

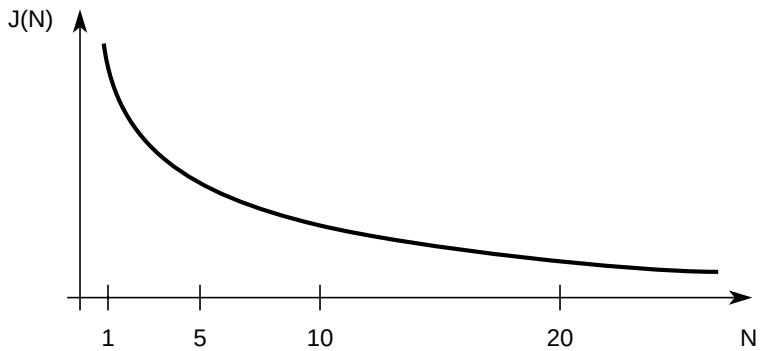

Figure A-5. Maximum bus clock jitter approximation

NOTE

On timers and serial modules a prescaler will eliminate the effect of the jitter to a large extent.

Table A-24. IPLL Characteristics

Conditions are shown in Table A-4 unless otherwise noted							
Num	**C**	**Rating**	**Symbol**	**Min**	**Typ**	**Max**	**Unit**
1	P	Self Clock Mode frequency[1]	f_{SCM}	1	—	4	MHz
2	T	VCO locking range	f_{VCO}	32	—	120	MHz
3	T	Reference Clock	f_{REF}	1	—	40	MHz
4	D	Lock Detection	$\|\Delta_{Lock}\|$	0	—	1.5	%[2]
5	D	Un-Lock Detection	$\|\Delta_{unl}\|$	0.5	—	2.5	%[2]
7	C	Time to lock	t_{lock}	—	214	150 + 256/f_{REF}	µs
8	C	Jitter fit parameter 1[3]	j_1	—	—	1.2	%
9	C	Jitter fit parameter 2[3]	j_2	—	—	0	%
10	C	Bus Frequency for FM1=1, FM0=1 (frequency modulation in PLLCTL register of s12xe_crg)	f_{bus}	—	—	38	MHz
11	C	Bus Frequency for FM1=1, FM0=0 (frequency modulation in PLLCTL register of s12xe_crg)	f_{bus}	—	—	39	MHz
12	C	Bus Frequency for FM1=0, FM0=1 (frequency modulation in PLLCTL register of s12xe_crg)	f_{bus}	—	—	39	MHz

1 Bus frequency is equivalent to $f_{SCM}/2$
2 % deviation from target frequency
3 f_{OSC}=4MHz, f_{BUS}=40MHz equivalent f_{PLL}=80MHz: REFDIV=$00, REFRQ=01, SYNDIV=$09, VCOFRQ=01, POSTDIV=$00

A.7 MSCAN

Table A-25. MSCAN Wake-up Pulse Characteristics

Conditions are shown in Table A-4 unless otherwise noted							
Num	**C**	**Rating**	**Symbol**	**Min**	**Typ**	**Max**	**Unit**
1	P	MSCAN wakeup dominant pulse filtered	t_{WUP}	—	—	1.5	µs
2	P	MSCAN wakeup dominant pulse pass	t_{WUP}	5	—	—	µs

A.8 SPI Timing

This section provides electrical parametrics and ratings for the SPI. In Table A-26 the measurement conditions are listed.

Table A-26. Measurement Conditions

Description	Value	Unit
Drive mode	Full drive mode	—
Load capacitance C_{LOAD}[1], on all outputs	50	pF
Thresholds for delay measurement points	(20% / 80%) V_{DDX}	V

1 Timing specified for equal load on all SPI output pins. Avoid asymmetric load.

A.8.1 Master Mode

In Figure A-6 the timing diagram for master mode with transmission format CPHA = 0 is depicted.

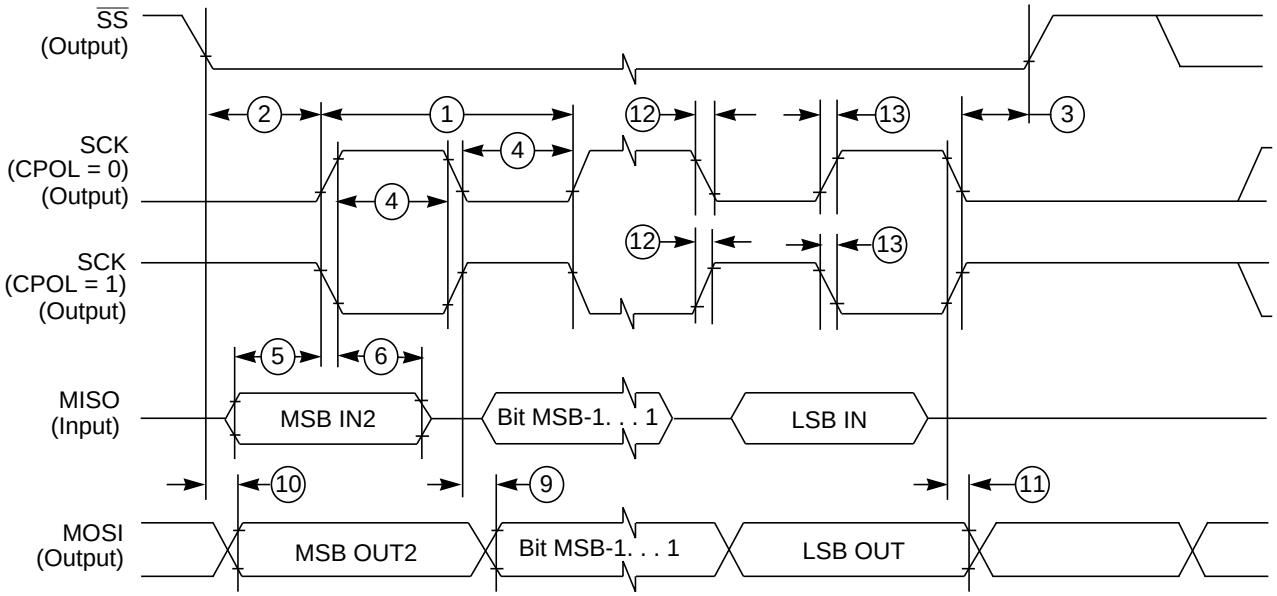

1. If configured as an output.
2. LSBF = 0. For LSBF = 1, bit order is LSB, bit 1, bit 2... MSB.

Figure A-6. SPI Master Timing (CPHA = 0)

In Figure A-7 the timing diagram for master mode with transmission format CPHA=1 is depicted.

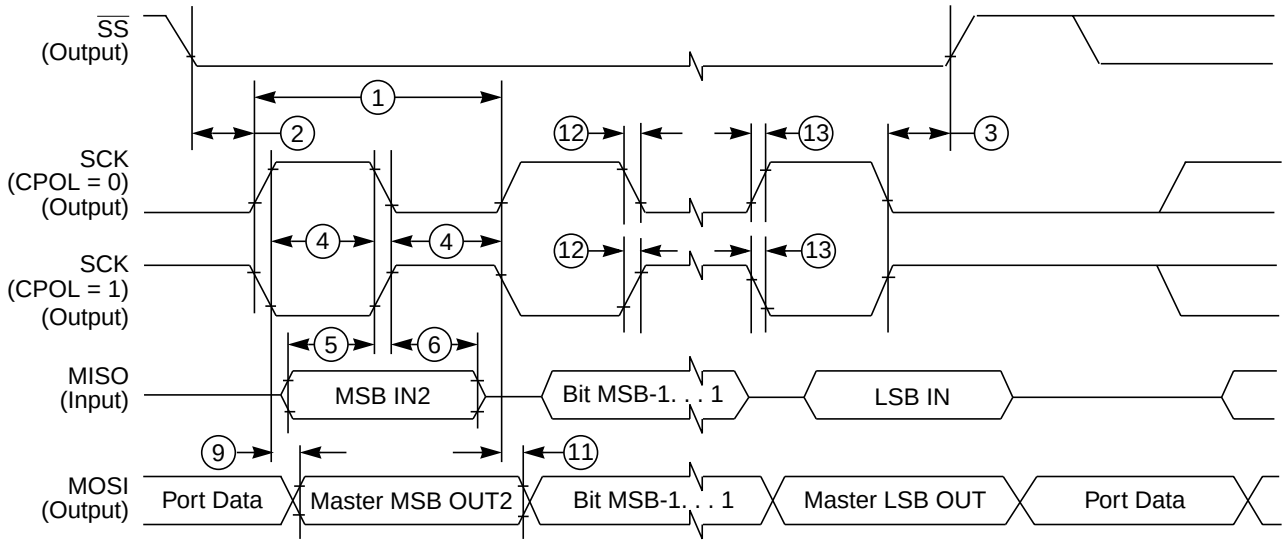

1.If configured as output
2. LSBF = 0. For LSBF = 1, bit order is LSB, bit 1,bit 2... MSB.

Figure A-7. SPI Master Timing (CPHA = 1)

In Table A-27 the timing characteristics for master mode are listed.

Table A-27. SPI Master Mode Timing Characteristics

Num	C	Characteristic	Symbol	Min	Typ	Max	Unit
1	D	SCK frequency	f_{sck}	1/2048	—	1/2[1]	f_{bus}
1	D	SCK period	t_{sck}	2	—	2048	t_{bus}
2	D	Enable lead time	t_{lead}	—	1/2	—	t_{sck}
3	D	Enable lag time	t_{lag}	—	1/2	—	t_{sck}
4	D	Clock (SCK) high or low time	t_{wsck}	—	1/2	—	t_{sck}
5	D	Data setup time (inputs)	t_{su}	8	—	—	ns
6	D	Data hold time (inputs)	t_{hi}	8	—	—	ns
9	D	Data valid after SCK edge	t_{vsck}	—	—	29	ns
10	D	Data valid after $\overline{SS}$ fall (CPHA = 0)	t_{vss}	—	—	15	ns
11	D	Data hold time (outputs)	t_{ho}	20	—	—	ns
12	D	Rise and fall time inputs	t_{rfi}	—	—	8	ns
13	D	Rise and fall time outputs	t_{rfo}	—	—	8	ns

[1]See Figure A-8.

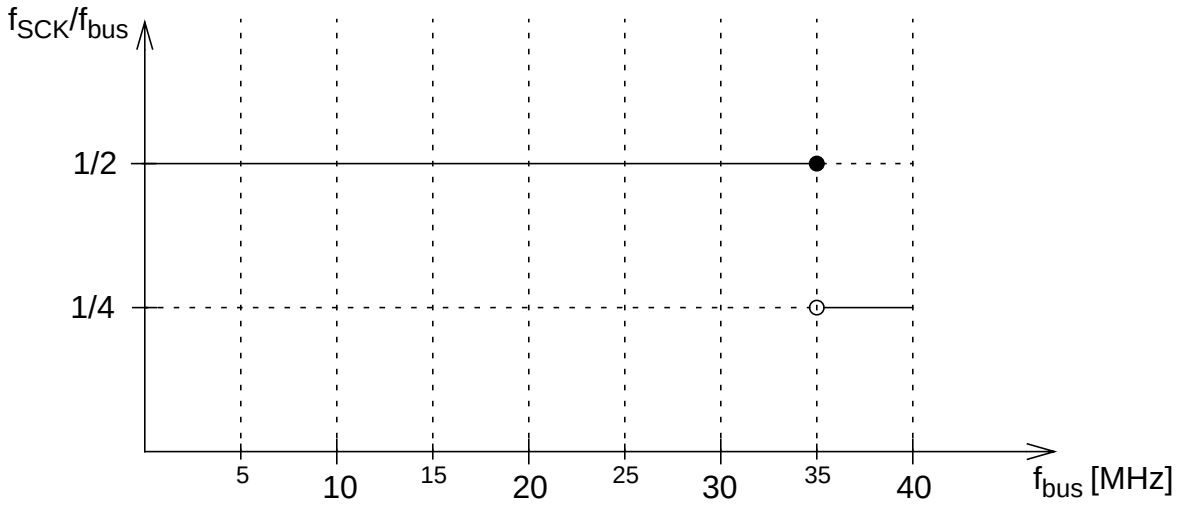

Figure A-8. Derating of maximum f_{SCK} to f_{bus} ratio in Master Mode

A.8.2 Slave Mode

In Figure A-9 the timing diagram for slave mode with transmission format CPHA = 0 is depicted.

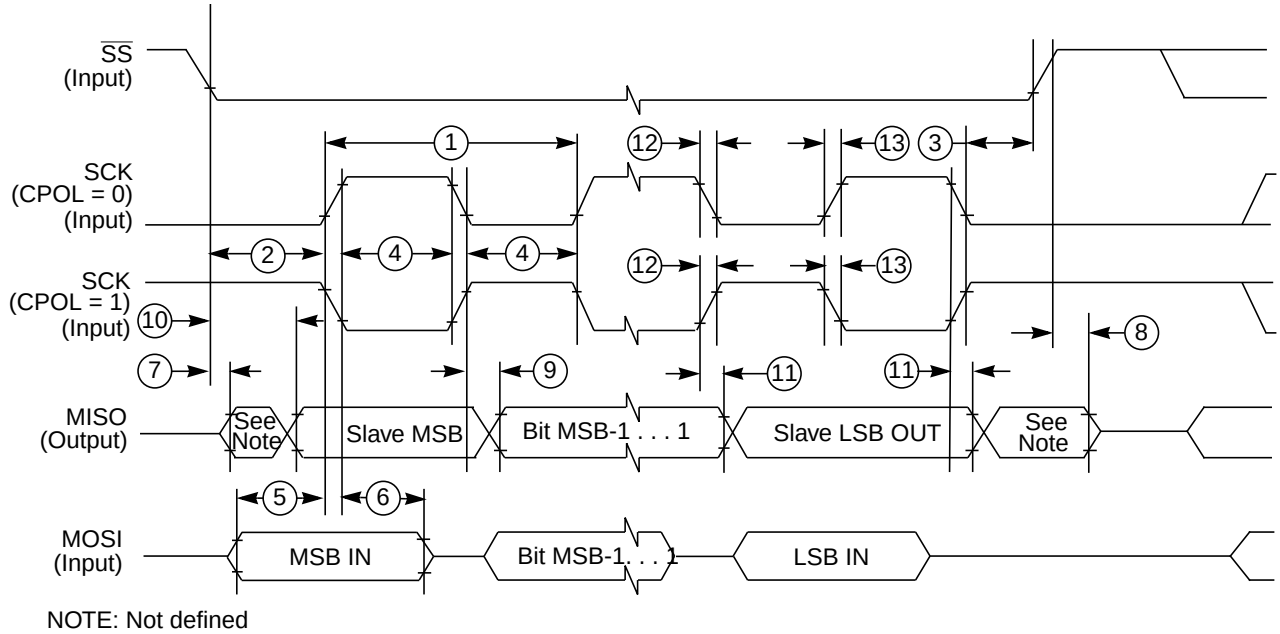

Figure A-9. SPI Slave Timing (CPHA = 0)

In Figure A-10 the timing diagram for slave mode with transmission format CPHA = 1 is depicted.

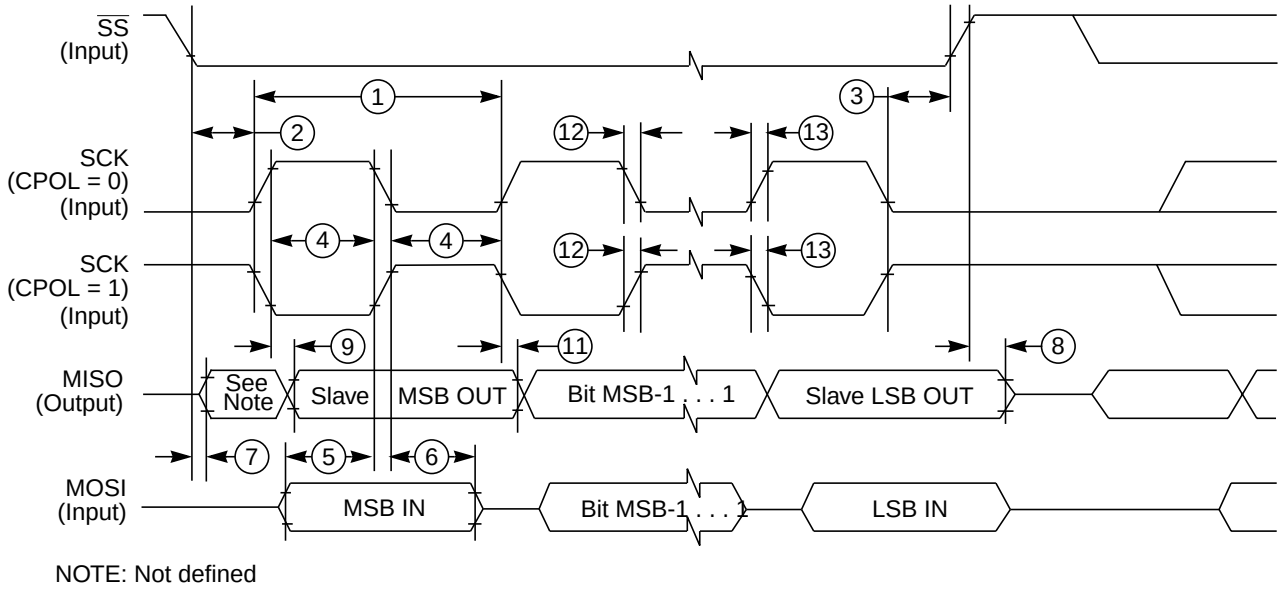

Figure A-10. SPI Slave Timing (CPHA = 1)

In Table A-28 the timing characteristics for slave mode are listed.

Table A-28. SPI Slave Mode Timing Characteristics

Num	C	Characteristic	Symbol	Min	Typ	Max	Unit
1	D	SCK frequency	f_{sck}	DC	—	1/4	f_{bus}
1	D	SCK period	t_{sck}	4	—	∞	t_{bus}
2	D	Enable lead time	t_{lead}	4	—	—	t_{bus}
3	D	Enable lag time	t_{lag}	4	—	—	t_{bus}
4	D	Clock (SCK) high or low time	t_{wsck}	4	—	—	t_{bus}
5	D	Data setup time (inputs)	t_{su}	8	—	—	ns
6	D	Data hold time (inputs)	t_{hi}	8	—	—	ns
7	D	Slave access time (time to data active)	t_a	—	—	20	ns
8	D	Slave MISO disable time	t_{dis}	—	—	22	ns
9	D	Data valid after SCK edge	t_{vsck}	—	—	$29 + 0.5 \cdot t_{bus}$[1]	ns
10	D	Data valid after $\overline{SS}$ fall	t_{vss}	—	—	$29 + 0.5 \cdot t_{bus}$[1]	ns
11	D	Data hold time (outputs)	t_{ho}	20	—	—	ns
12	D	Rise and fall time inputs	t_{rfi}	—	—	8	ns
13	D	Rise and fall time outputs	t_{rfo}	—	—	8	ns

1 0.5 t_{bus} added due to internal synchronization delay

Appendix B
Package Information

This section provides the physical dimensions of the S12XS family packages.

B.1 112-pin LQFP Mechanical Dimensions

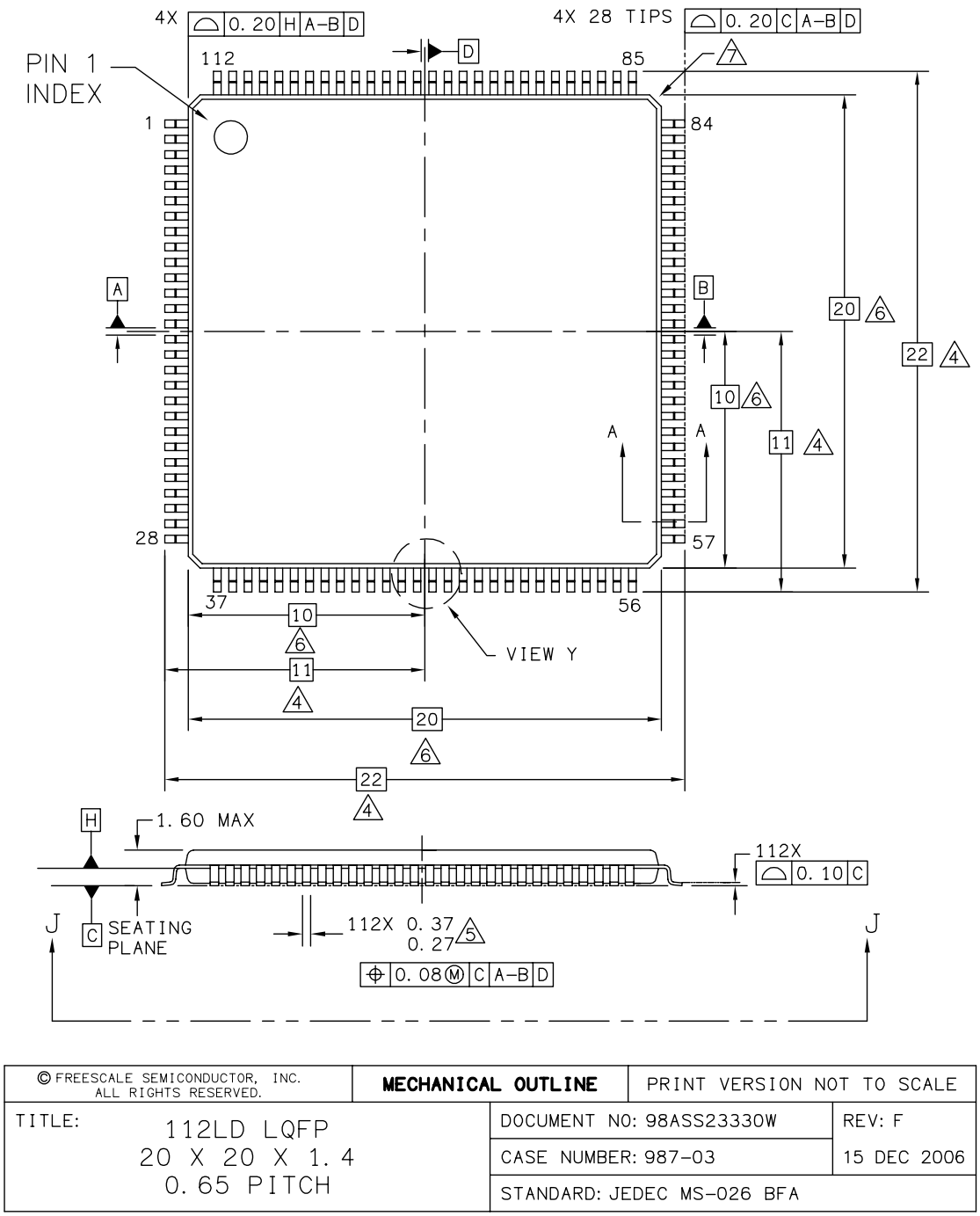

Figure B-1. 112-pin LQFP (case no. 987) - page 1

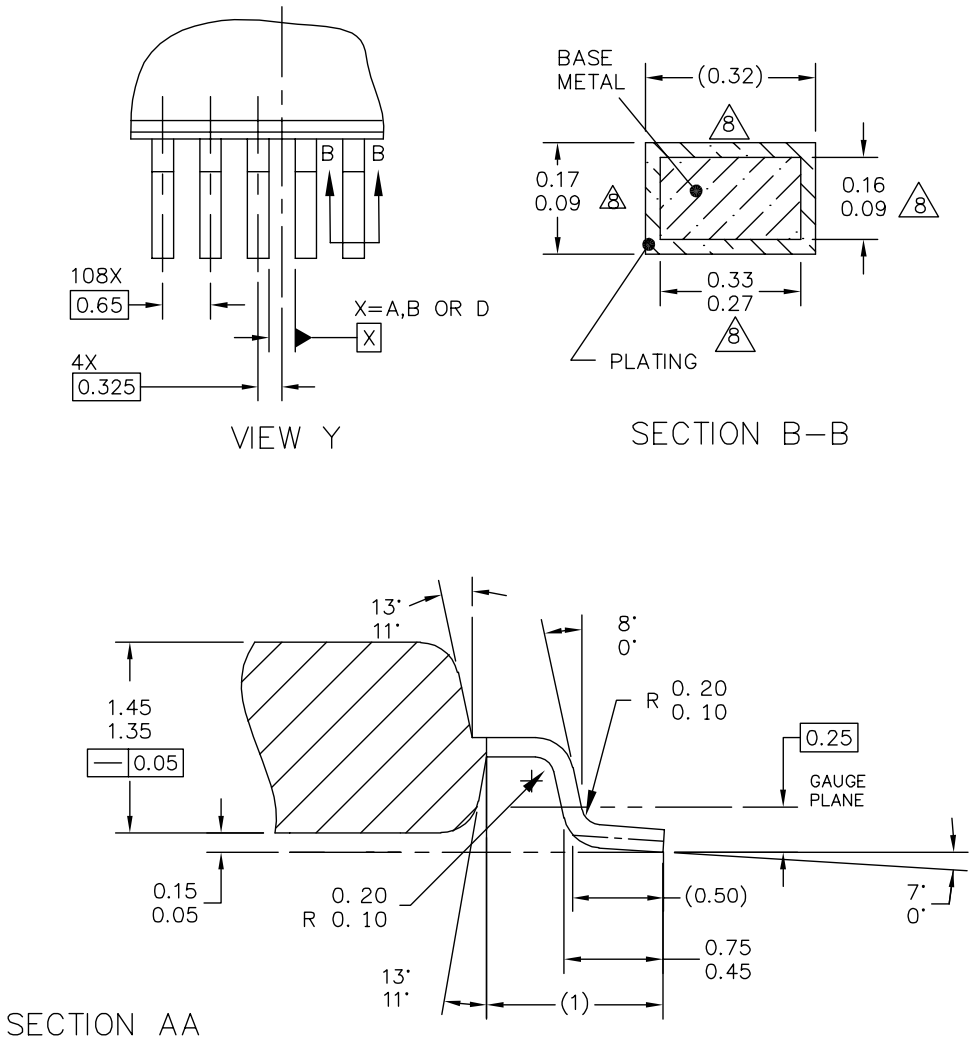

© FREESCALE SEMICONDUCTOR, INC. ALL RIGHTS RESERVED.	MECHANICAL OUTLINE	PRINT VERSION NOT TO SCALE
TITLE: 112LD LQFP 20 X 20 X 1. 4 0. 65 PITCH	DOCUMENT NO: 98ASS23330W	REV: F
	CASE NUMBER: 987–03	15 DEC 2006
	STANDARD: JEDEC MS–026 BFA	

Figure B-2. 112-pin LQFP (case no. 987) - page 2

NOTES:

1. DIMENSIONS ARE IN MILLIMETERS.
2. INTERPRET DIMENSIONS AND TOLERANCES PER ASME Y14.5M–1994.
3. DATUMS A, B AND D TO BE DETERMINED AT DATUM PLANE H.
4. DIMENSIONS TO BE DETERMINED AT SEATING PLANE C.
5. THIS DIMENSION DOES NOT INCLUDE DAMBAR PROTRUSION. ALLOWABLE DAMBAR PROTRUSION SHALL NOT CAUSE THE LEAD WIDTH TO EXCEED THE UPPER LIMIT BY MORE THAN 0.08 MM. DAMBAR CANNOT BE LOCATED ON THE LOWER RADIUS OR THE FOOT. MINIMUM SPACE BETWEEN PROTRUSION AND ADJACENT LEAD OR PROTRUSION 0.07 MM.
6. THIS DIMENSION DOES NOT INCLUDE MOLD PROTRUSION. ALLOWABLE PROTRUSION IS 0.254 MM PER SIDE. THIS DIMENSION IS MAXIMUM PLASTIC BODY SIZE DIMENSIONS INCLUDING MOLD MISMATCH.
7. EXACT SHAPE OF EACH CORNER IS OPTIONAL.
8. THESE DIMENSIONS APPLY TO THE FLAT SECTION OF THE LEAD BETWEEN 0.10 MM AND 0.25 MM FROM THE LEAD TIP.

© FREESCALE SEMICONDUCTOR, INC. ALL RIGHTS RESERVED.	**MECHANICAL OUTLINE**	PRINT VERSION NOT TO SCALE	
TITLE: 112LD LQFP, 20 X 20 X 1.4 PKG, 0.65 PITCH	DOCUMENT NO: 98ASS23330W		REV: F
	CASE NUMBER: 987-03		15 DEC 2006
	STANDARD: JEDEC MS-026 BFA		

Figure B-3. 112-pin LQFP (case no. 987) - page 3

B.2 80-Pin QFP Mechanical Dimensions

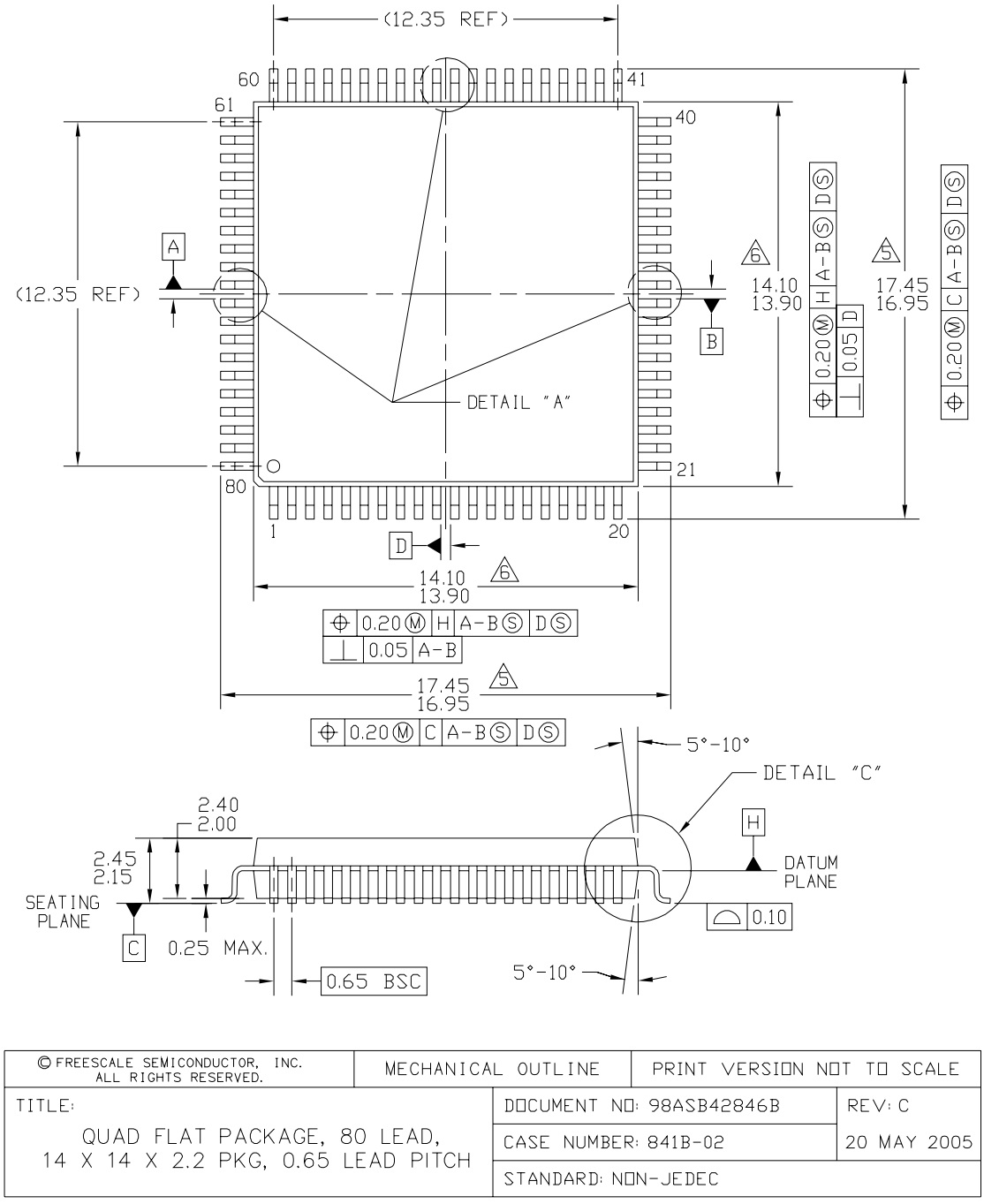

Figure B-4. 80-pin QFP (case no. 841B) - page 1

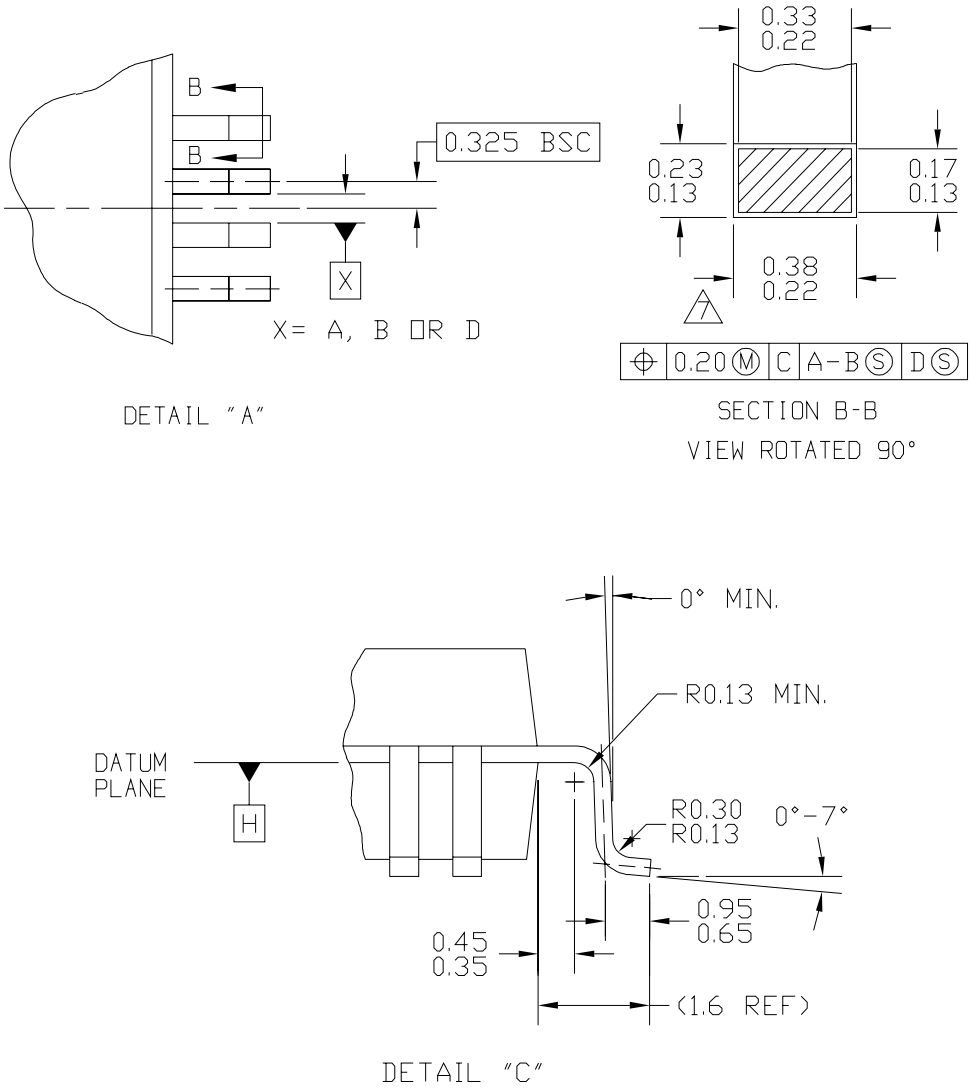

© FREESCALE SEMICONDUCTOR, INC. ALL RIGHTS RESERVED.	MECHANICAL OUTLINE	PRINT VERSION NOT TO SCALE
TITLE: QUAD FLAT PACKAGE, 80 LEAD, 14 X 14 X 2.2 PKG, 0.65 LEAD PITCH	DOCUMENT NO: 98ASB42846B	REV: C
	CASE NUMBER: 841B-02	20 MAY 2005
	STANDARD: NON-JEDEC	

Figure B-5. 80-pin QFP (case no. 841B) - page 2

NOTES:

1. DIMENSIONING AND TOLERANCING PER ANSI Y14.5M, 1982.
2. CONTROLLING DIMENSION: MILLIMETER.
3. DATUM PLANE -H- IS LOCATED AT BOTTOM OF LEAD AND IS COINCIDENT WITH THE LEAD WHERE THE LEAD EXITS THE PLASTIC BODY AT THE BOTTOM OF THE PARTING LINE.
4. DATUMS A-B AND -D- TO BE DETERMINED AT DATUM PLANE -H-.
5. DIMENSIONS TO BE DETERMINED AT SEATING PLANE -C-.
6. DIMENSIONS DO NOT INCLUDE MOLD PROTRUSION. ALLOWABLE PROTRUSION IS 0.25 PER SIDE. DIMENSIONS DO INCLUDE MOLD MISMATCH AND ARE DETERMINED AT DATUM PLANE -H-.
7. DIMENSION DOES NOT INCLUDE DAMBAR PROTRUSION. ALLOWABLE DAMBAR PROTRUSION SHALL BE 0.08 TOTAL IN EXCESS OF THE DIMENSION AT MAXIMUM MATERIAL CONDITION. DAMBAR CANNOT BE LOCATED ON THE LOWER RADIUS OR THE FOOT.

© FREESCALE SEMICONDUCTOR, INC. ALL RIGHTS RESERVED.	MECHANICAL OUTLINE	PRINT VERSION NOT TO SCALE
TITLE: QUAD FLAT PACKAGE, 80 LEAD, 14 X 14 X 2.2 PKG, 0.65 LEAD PITCH	DOCUMENT NO: 98ASB42846B	REV: C
	CASE NUMBER: 841B-02	20 MAY 2005
	STANDARD: NON-JEDEC	

Figure B-6. 80-pin QFP (case no. 841B) - page 3

B.3 64-Pin LQFP Mechanical Dimensions

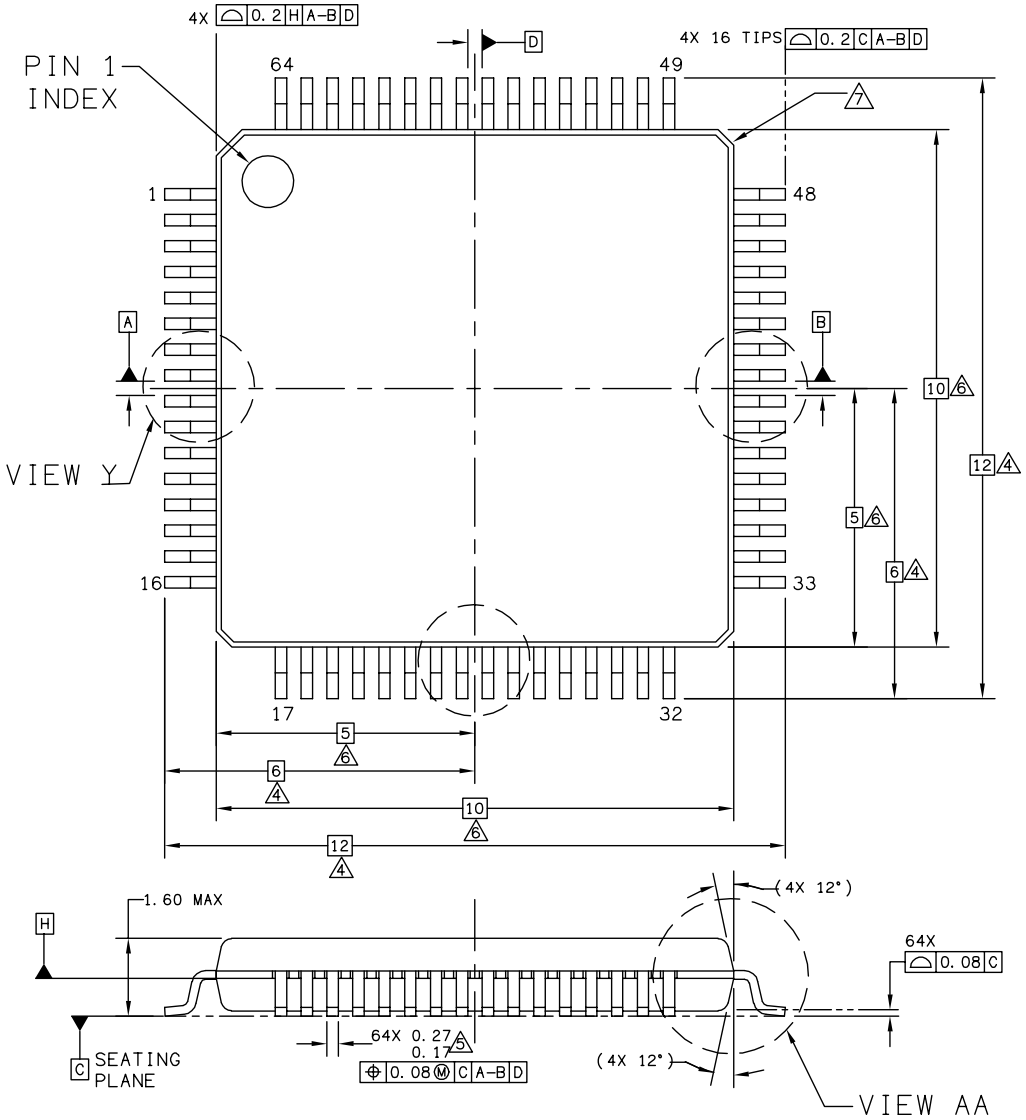

© FREESCALE SEMICONDUCTOR, INC. ALL RIGHTS RESERVED.	**MECHANICAL OUTLINE**	PRINT VERSION NOT TO SCALE
TITLE: 64LD LQFP, 10 X 10 X 1.4 PKG, 0.5 PITCH, CASE OUTLINE	DOCUMENT NO: 98ASS23234W	REV: E
	CASE NUMBER: 840F-02	11 AUG 2006
	STANDARD: JEDEC MS-026 BCD	

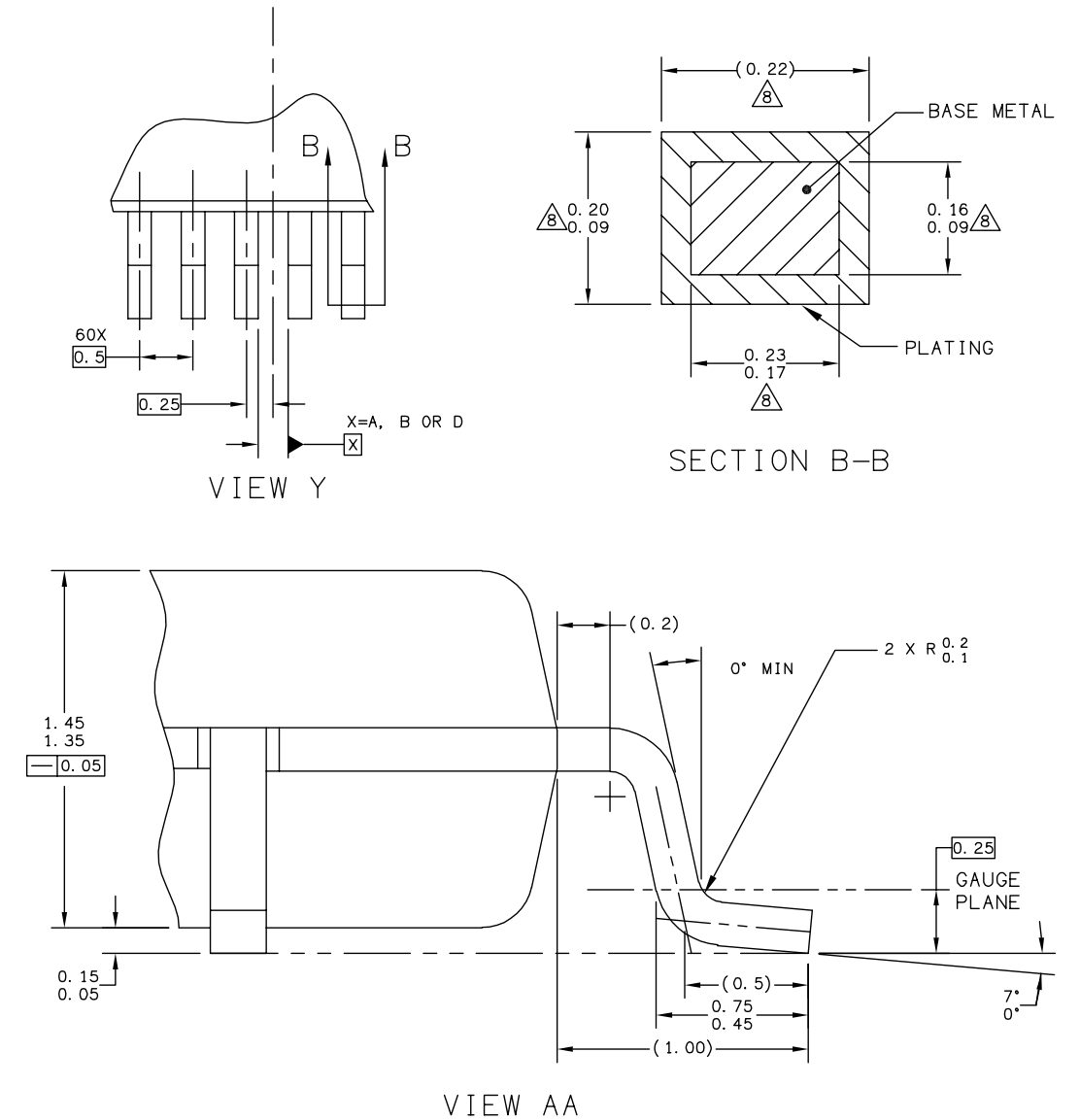

© FREESCALE SEMICONDUCTOR, INC. ALL RIGHTS RESERVED.	MECHANICAL OUTLINE	PRINT VERSION NOT TO SCALE
TITLE: 64LD LQFP, 10 X 10 X 1.4 PKG, 0.5 PITCH, CASE OUTLINE	DOCUMENT NO: 98ASS23234W	REV: E
	CASE NUMBER: 840F–02	11 AUG 2006
	STANDARD: JEDEC MS–026 BCD	

Figure B-7. 64-pin LQFP (case no. 840F) - page 2

NOTES:

1. DIMENSIONS ARE IN MILLIMETERS.
2. DIMENSIONING AND TOLERANCING PER ASME Y14.5M-1994.
3. DATUMS A, B AND D TO BE DETERMINED AT DATUM PLANE H.
4. DIMENSIONS TO BE DETERMINED AT SEATING PLANE C.
5. THIS DIMENSION DOES NOT INCLUDE DAMBAR PROTRUSION. ALLOWABLE DAMBAR PROTRUSION SHALL NOT CAUSE THE LEAD WIDTH TO EXCEED THE UPPER LIMIT BY MORE THAN 0.08 mm AT MAXIMUM MATERIAL CONDITION. DAMBAR CANNOT BE LOCATED ON THE LOWER RADIUS OR THE FOOT. MINIMUM SPACE BETWEEN PROTRUSION AND ADJACENT LEAD SHALL NOT BE LESS THAN 0.07 mm.
6. THIS DIMENSION DOES NOT INCLUDE MOLD PROTRUSION. ALLOWABLE PROTRUSION IS 0.25 mm PER SIDE. THIS DIMENSION IS MAXIMUM PLASTIC BODY SIZE DIMENSION INCLUDING MOLD MISMATCH.
7. EXACT SHAPE OF EACH CORNER IS OPTIONAL.
8. THESE DIMENSIONS APPLY TO THE FLAT SECTION OF THE LEAD BETWEEN 0.1 mm AND 0.25 mm FROM THE LEAD TIP.

© FREESCALE SEMICONDUCTOR, INC. ALL RIGHTS RESERVED.	**MECHANICAL OUTLINE**	PRINT VERSION NOT TO SCALE	
TITLE: 64LD LQFP, 10 X 10 X 1.4 PKG, 0.5 PITCH, CASE OUTLINE	DOCUMENT NO: 98ASS23234W	REV: E	
	CASE NUMBER: 840F-02	11 AUG 2006	
	STANDARD: JEDEC MS-026 BCD		

Figure B-8. 64-pin LQFP (case no. 840F) - page 3

Appendix C
PCB Layout Guidelines

C.1 General

The PCB must be carefully laid out to ensure proper operation of the voltage regulator as well as of the MCU itself. The following rules must be observed:

- Every supply pair must be decoupled by a ceramic capacitor connected as near as possible to the corresponding pins .
- Central point of the ground star should be the VSS3 pin.
- Use low ohmic low inductance connections between VSS1, VSS2 and VSS3.
- VSSPLL must be directly connected to VSS3.
- Keep traces of VSSPLL, EXTAL, and XTAL as short as possible and occupied board area for C7, C8, and Q1 as small as possible.
- Do not place other signals or supplies underneath area occupied by C7, C8, and Q1 and the connection area to the MCU.
- Central power input should be fed in at the VDDA/VSSA pins.

Example layouts are illustrated on the following pages.

Table C-1. Recommended Decoupling Capacitor Choice

Component	Purpose	Type	Value
C1	V_{DDF} filter capacitor	Ceramic X7R	220 nF
C2	N/A	—	—
C3	V_{DDX2} filter capacitor	X7R/tantalum	>=100 nF
C4	V_{DDPLL} filter capacitor	Ceramic X7R	220 nF
C5	OSC load capacitor	From crystal manufacturer	
C6	OSC load capacitor		
C7	V_{DDR} filter capacitor	X7R/tantalum	>=100 nF
C8	N/A	—	—
C9	V_{DD} filter capacitor	Ceramic X7R	220 nF
C10	V_{DDA1} filter capacitor	Ceramic X7R	>=100 nF
C11	V_{DDX1} filter capacitor	X7R/tantalum	>=100 nF
Q1	Quartz	—	—

C.1.1 112-Pin LQFP Recommended PCB Layout

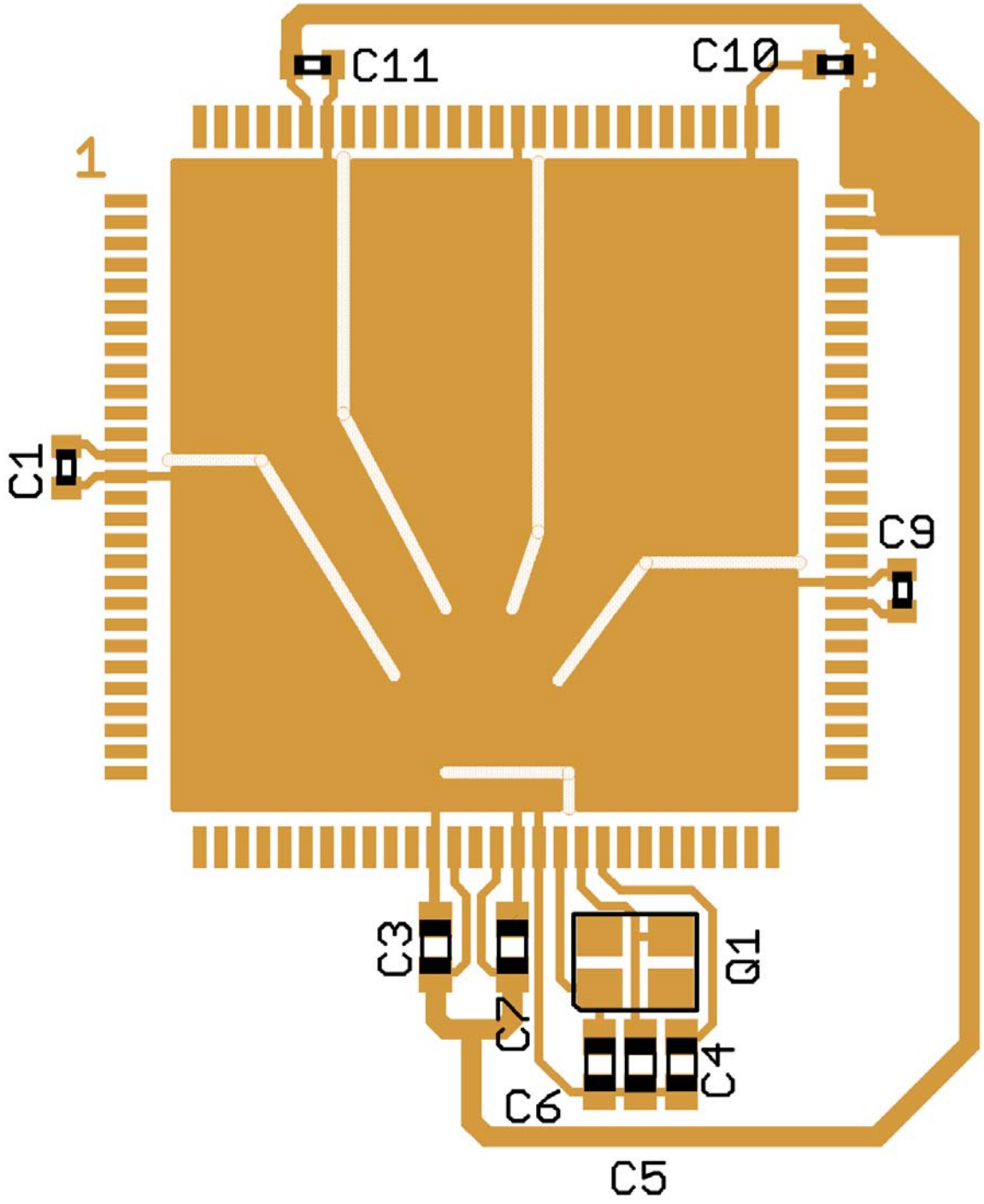

Figure C-1. 112-Pin LQFP Recommended PCB Layout (Loop Controlled Pierce Oscillator)

C.1.2 80-Pin QFP Recommended PCB Layout

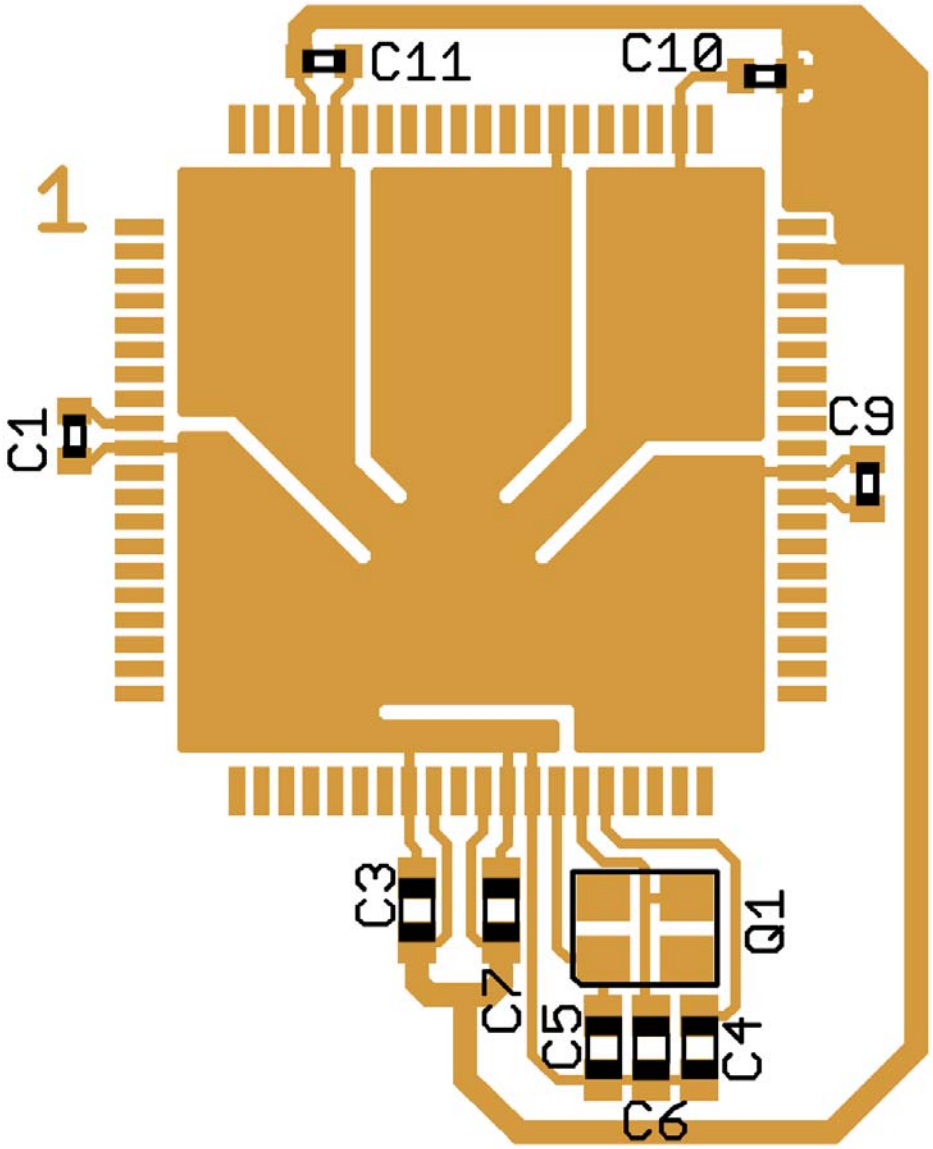

Figure C-2. 80-Pin QFP Recommended PCB Layout (Loop Controlled Pierce Oscillator)

C.1.3 64-Pin LQFP Recommended PCB Layout

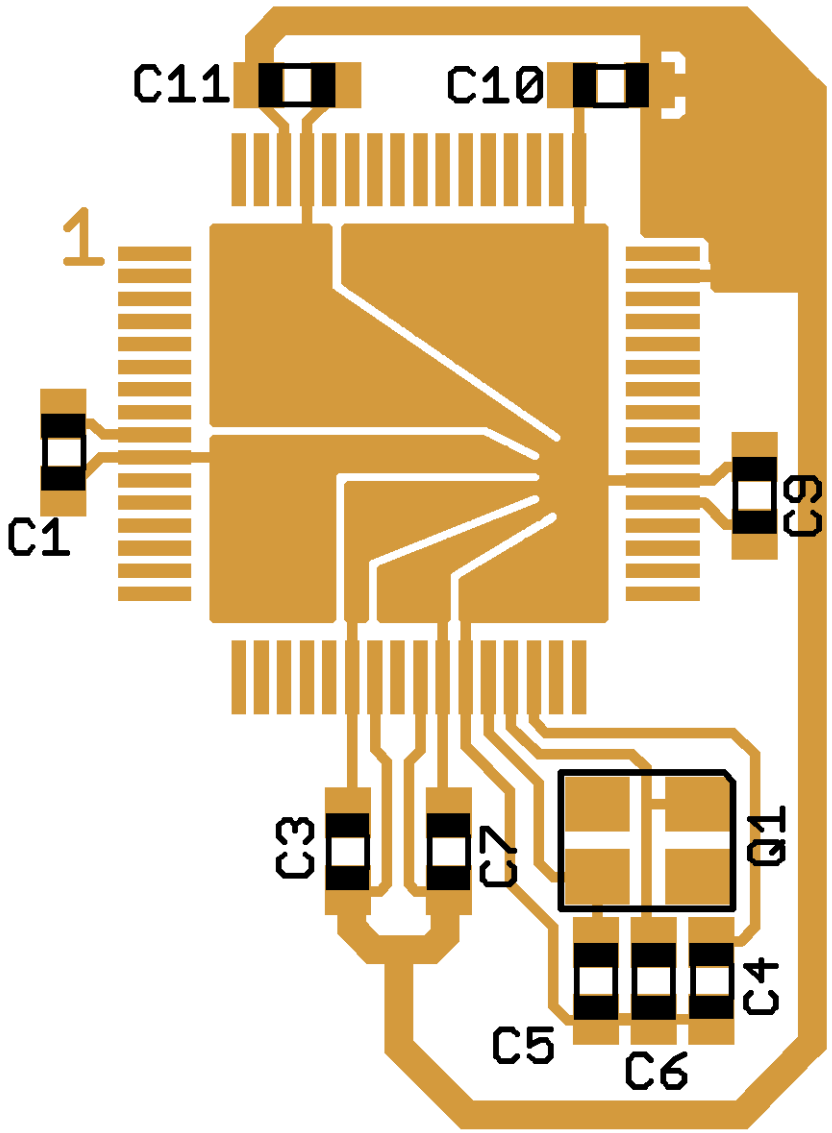

Figure C-3. 64-Pin LQFP Recommended PCB Layout (Loop Controlled Pierce Oscillator)

Appendix D
Derivative Differences

D.1 Memory Sizes and Package Options S12XS family

Table D-1. Package and Memory Options of S12XS family

Device	Package	Flash	RAM	Data Flash
9S12XS256	112 LQFP	256K	12K	8K
	80 QFP			
	64 LQFP			
9S12XS128	112 LQFP	128K	8K	8K
	80 QFP			
	64 LQFP			
9S12XS64	112 LQFP	64K	4K	4K
	80 QFP			
	64 LQFP			

Table D-2. Peripheral Options of S12XS family Members

Device	Package	CAN	SCI	SPI	TIM	PIT	A/D	PWM
9S12XS256	112 LQFP	1	2	1	8ch	4ch	16ch	8ch
	80 QFP	1	2	1	8ch	4ch	8ch	8ch
	64 LQFP	1	2	1	8ch	4ch	8ch	8ch
9S12XS128	112 LQFP	1	2	1	8ch	4ch	16ch	8ch
	80 QFP	1	2	1	8ch	4ch	8ch	8ch
	64 LQFP	1	2	1	8ch	4ch	8ch	8ch
9S12XS64	112 LQFP	1	2	1	8ch	4ch	16ch	8ch
	80 QFP	1	2	1	8ch	4ch	8ch	8ch
	64 LQFP	1	2	1	8ch	4ch	8ch	8ch

NOTE

For the 80QFP and 64LQFP package options, several peripheral functions can be routed under software control to different pins. Not all functions are available simultaneously. For details see Table 1-5.

Appendix E
Detailed Register Address Map

E.1 Detailed Register Map

The following tables show the detailed register map of the S12XS family.

0x0000–0x0009 Port Integration Module (PIM) Map 1 of 5

Address	Name		Bit 7	Bit 6	Bit 5	Bit 4	Bit 3	Bit 2	Bit 1	Bit 0
0x0000	PORTA	R/W	PA7	PA6	PA5	PA4	PA3	PA2	PA1	PA 0
0x0001	PORTB	R/W	PB7	PB6	PB5	PB4	PB3	PB2	PB1	PB0
0x0002	DDRA	R/W	DDRA7	DDRA6	DDRA5	DDRA4	DDRA3	DDRA2	DDRA1	DDRA0
0x0003	DDRB	R/W	DDRB7	DDRB6	DDRB5	DDRB4	DDRB3	DDRB2	DDRB1	DDRB0
0x0004	Reserved	R	0	0	0	0	0	0	0	0
		W								
0x0005	Reserved	R	0	0	0	0	0	0	0	0
		W								
0x0006	Reserved	R	0	0	0	0	0	0	0	0
		W								
0x0007	Reserved	R	0	0	0	0	0	0	0	0
		W								
0x0008	PORTE	R	PE7	PE6	PE5	PE4	PE3	PE2	PE1	PE0
		W								
0x0009	DDRE	R	DDRE7	DDRE6	DDRE5	DDRE4	DDRE3	DDRE2	0	0
		W								

0x000A–0x000B Module Mapping Control (S12XMMC) Map 1 of 2

Address	Name		Bit 7	Bit 6	Bit 5	Bit 4	Bit 3	Bit 2	Bit 1	Bit 0
0x000A	Reserved	R	0	0	0	0	0	0	0	0
		W								
0x000B	MODE	R	MODC	0	0	0	0	0	0	0
		W								

0x000C–0x000D Port Integration Module (PIM) Map 2 of 5

Address	Name		Bit 7	Bit 6	Bit 5	Bit 4	Bit 3	Bit 2	Bit 1	Bit 0
0x000C	PUCR	R	PUPKE	BKPUE	0	PUPEE	0	0	PUPBE	PUPAE
		W								
0x000D	RDRIV	R	RDPK	0	0	RDPE	0	0	RDPB	RDPA
		W								

0x000E–0x000F Reserved Register Space

Address	Name		Bit 7	Bit 6	Bit 5	Bit 4	Bit 3	Bit 2	Bit 1	Bit 0
0x000E	Reserved	R	0	0	0	0	0	0	0	0
		W								
0x000F	Reserved	R	0	0	0	0	0	0	0	0
		W								

0x0010–0x0017 Module Mapping Control (S12XMMC) Map 2 of 2

Address	Name		Bit 7	Bit 6	Bit 5	Bit 4	Bit 3	Bit 2	Bit 1	Bit 0
0x0010	GPAGE	R	0	GP6	GP5	GP4	GP3	GP2	GP1	GP0
		W								
0x0011	DIRECT	R/W	DP15	DP14	DP13	DP12	DP11	DP10	DP9	DP8
0x0012	Reserved	R	0	0	0	0	0	0	0	0
		W								
0x0013	MMCCTL1	R	MGRAMON	0	DFIFRON	PGMIFRON	0	0	0	0
		W								
0x0014	Reserved	R	0	0	0	0	0	0	0	0
		W								
0x0015	PPAGE	R/W	PIX7	PIX6	PIX5	PIX4	PIX3	PIX2	PIX1	PIX0
0x0016	RPAGE	R/W	RP7	RP6	RP5	RP4	RP3	RP2	RP1	RP0
0x0017	EPAGE	R/W	EP7	EP6	EP5	EP4	EP3	EP2	EP1	EP0

0x0018–0x001B Miscellaneous Peripheral

Address	Name		Bit 7	Bit 6	Bit 5	Bit 4	Bit 3	Bit 2	Bit 1	Bit 0
0x0018	Reserved	R	0	0	0	0	0	0	0	0
		W								
0x0019	Reserved	R	0	0	0	0	0	0	0	0
		W								
0x001A	PARTIDH	R	PARTIDH							
		W								
0x001B	PARTIDL	R	PARTIDL							
		W								

0x001C–0x001D Port Integration Module (PIM) Map 3 of 5

Address	Name		Bit 7	Bit 6	Bit 5	Bit 4	Bit 3	Bit 2	Bit 1	Bit 0
0x001C	ECLKCTL	R/W	NECLK	NCLKX2	DIV16	EDIV4	EDIV3	EDIV2	EDIV1	EDIV0
0x001D	Reserved	R	0	0	0	0	0	0	0	0
		W								

0x001E–0x001F Port Integration Module (PIM) Map 3 of 5

Address	Name		Bit 7	Bit 6	Bit 5	Bit 4	Bit 3	Bit 2	Bit 1	Bit 0
0x001E	IRQCR	R	IRQE	IRQEN	0	0	0	0	0	0
		W								
0x001F	Reserved	R	0	0	0	0	0	0	0	0
		W								

0x0020–0x002F Debug Module (S12XDBG) Map

Address	Name		Bit 7	Bit 6	Bit 5	Bit 4	Bit 3	Bit 2	Bit 1	Bit 0
0x0020	DBGC1	R	ARM	0	reserved	BDM	DBGBRK	reserved	COMRV	
		W		TRIG						
0x0021	DBGSR	R	TBF	0	0	0	0	SSF2	SSF1	SSF0
		W								
0x0022	DBGTCR	R/W	reserved	TSOURCE	TRANGE		TRCMOD		TALIGN	
0x0023	DBGC2	R	0	0	0	0	CDCM		ABCM	
		W								
0x0024	DBGTBH	R	Bit 15	Bit 14	Bit 13	Bit 12	Bit 11	Bit 10	Bit 9	Bit 8
		W								
0x0025	DBGTBL	R	Bit 7	Bit 6	Bit 5	Bit 4	Bit 3	Bit 2	Bit 1	Bit 0
		W								
0x0026	DBGCNT	R	0	CNT						
		W								
0x0027	DBGSCRX	R	0	0	0	0	SC3	SC2	SC1	SC0
		W								
0x0027	DBGMFR	R	0	0	0	0	MC3	MC2	MC1	MC0
		W								
0x0028[1]	DBGXCTL (COMPA/C)	R	0	NDB	TAG	BRK	RW	RWE	reserved	COMPE
		W								
0x0028[2]	DBGXCTL (COMPB/D)	R/W	SZE	SZ	TAG	BRK	RW	RWE	reserved	COMPE
0x0029	DBGXAH	R	0	Bit 22	21	20	19	18	17	Bit 16
		W								
0x002A	DBGXAM	R/W	Bit 15	14	13	12	11	10	9	Bit 8
0x002B	DBGXAL	R/W	Bit 7	6	5	4	3	2	1	Bit 0
0x002C	DBGXDH	R/W	Bit 15	14	13	12	11	10	9	Bit 8
0x002D	DBGXDL	R/W	Bit 7	6	5	4	3	2	1	Bit 0
0x002E	DBGXDHM	R/W	Bit 15	14	13	12	11	10	9	Bit 8
0x002F	DBGXDLM	R/W	Bit 7	6	5	4	3	2	1	Bit 0

1 This represents the contents if the Comparator A or C control register is blended into this address
2 This represents the contents if the Comparator B or D control register is blended into this address

0x0030–0x0031 Reserved Register Space

Address	Name		Bit 7	Bit 6	Bit 5	Bit 4	Bit 3	Bit 2	Bit 1	Bit 0
0x0030	Reserved	R	0	0	0	0	0	0	0	0
		W								
0x0031	Reserved	R	0	0	0	0	0	0	0	0
		W								

0x0032–0x0033 Port Integration Module (PIM) Map 4 of 5

Address	Name		Bit 7	Bit 6	Bit 5	Bit 4	Bit 3	Bit 2	Bit 1	Bit 0
0x0032	PORTK	R	PK7	0	PK5	PK4	PK3	PK2	PK1	PK0
		W								
0x0033	DDRK	R	DDRK7	0	DDRK5	DDRK4	DDRK3	DDRK2	DDRK1	DDRK0
		W								

0x0034–0x003F Clock and Reset Generator (CRG) Map

Address	Name		Bit 7	Bit 6	Bit 5	Bit 4	Bit 3	Bit 2	Bit 1	Bit 0
0x0034	SYNR	R	VCOFRQ[1:0]		SYNDIV[5:0]					
		W								
0x0035	REFDV	R	REFFRQ[1:0]		REFDIV[5:0]					
		W								
0x0036	POSTDIV	R	0	0	0	POSTDIV[4:0]				
		W								
0x0037	CRGFLG	R	RTIF	PORF	LVRF	LOCKIF	LOCK	ILAF	SCMIF	SCM
		W								
0x0038	CRGINT	R	RTIE	0	0	LOCKIE	0	0	SCMIE	0
		W								
0x0039	CLKSEL	R	PLLSEL	PSTP	XCLKS	0	PLLWAI	0	RTIWAI	COPWAI
		W								
0x003A	PLLCTL	R	CME	PLLON	FM1	FM0	FSTWKP	PRE	PCE	SCME
		W								
0x003B	RTICTL	R	RTDEC	RTR6	RTR5	RTR4	RTR3	RTR2	RTR1	RTR0
		W								
0x003C	COPCTL	R	WCOP	RSBCK	0	0	0	CR2	CR1	CR0
		W			WRTMASK					
0x003D	FORBYP	R	0	0	0	0	0	0	0	0
		W	Reserved For Factory Test							
0x003E	CTCTL	R	0	0	0	0		0	0	0
		W	Reserved For Factory Test							
0x003F	ARMCOP	R	0	0	0	0	0	0	0	0
		W	Bit 7	6	5	4	3	2	1	Bit 0

0x0040–0x006F Timer Module (TIM) Map

Address	Name		Bit 7	Bit 6	Bit 5	Bit 4	Bit 3	Bit 2	Bit 1	Bit 0
0x0040	TIOS	R/W	IOS7	IOS6	IOS5	IOS4	IOS3	IOS2	IOS1	IOS0
0x0041	CFORC	R	0	0	0	0	0	0	0	0
		W	FOC7	FOC6	FOC5	FOC4	FOC3	FOC2	FOC1	FOC0
0x0042	OC7M	R/W	OC7M7	OC7M6	OC7M5	OC7M4	OC7M3	OC7M2	OC7M1	OC7M0
0x0043	OC7D	R/W	OC7D7	OC7D6	OC7D5	OC7D4	OC7D3	OC7D2	OC7D1	OC7D0
0x0044	TCNTH	R	Bit 15	14	13	12	11	10	9	Bit 8
		W								
0x0045	TCNTL	R	Bit 7	6	5	4	3	2	1	Bit 0
		W								
0x0046	TSCR1	R/W	TEN	TSWAI	TSFRZ	TFFCA	PRNT	0	0	0
0x0047	TTOV	R/W	TOV7	TOV6	TOV5	TOV4	TOV3	TOV2	TOV1	TOV0
0x0048	TCTL1	R/W	OM7	OL7	OM6	OL6	OM5	OL5	OM4	OL4
0x0049	TCTL2	R/W	OM3	OL3	OM2	OL2	OM1	OL1	OM0	OL0
0x004A	TCTL3	R/W	EDG7B	EDG7A	EDG6B	EDG6A	EDG5B	EDG5A	EDG4B	EDG4A
0x004B	TCTL4	R/W	EDG3B	EDG3A	EDG2B	EDG2A	EDG1B	EDG1A	EDG0B	EDG0A
0x004C	TIE	R/W	C7I	C6I	C5I	C4I	C3I	C2I	C1I	C0I
0x004D	TSCR2	R/W	TOI	0	0	0	TCRE	PR2	PR1	PR0
0x004E	TFLG1	R/W	C7F	C6F	C5F	C4F	C3F	C2F	C1F	C0F
0x004F	TFLG2	R/W	TOF	0	0	0	0	0	0	0
0x0050	TC0H	R/W	Bit 15	Bit 14	Bit 13	Bit 12	Bit 11	Bit 10	Bit 9	Bit 8
0x0051	TC0L	R/W	Bit 7	Bit 6	Bit 5	Bit 4	Bit 3	Bit 2	Bit 1	Bit 0
0x0052	TC1H	R/W	Bit 15	Bit 14	Bit 13	Bit 12	Bit 11	Bit 10	Bit 9	Bit 8
0x0053	TC1L	R/W	Bit 7	Bit 6	Bit 5	Bit 4	Bit 3	Bit 2	Bit 1	Bit 0
0x0054	TC2H	R/W	Bit 15	Bit 14	Bit 13	Bit 12	Bit 11	Bit 10	Bit 9	Bit 8
0x0055	TC2L	R/W	Bit 7	Bit 6	Bit 5	Bit 4	Bit 3	Bit 2	Bit 1	Bit 0
0x0056	TC3H	R/W	Bit 15	Bit 14	Bit 13	Bit 12	Bit 11	Bit 10	Bit 9	Bit 8

0x0040–0x006F Timer Module (TIM) Map

Address	Name		Bit 7	Bit 6	Bit 5	Bit 4	Bit 3	Bit 2	Bit 1	Bit 0
0x0057	TC3L	R/W	Bit 7	Bit 6	Bit 5	Bit 4	Bit 3	Bit 2	Bit 1	Bit 0
0x0058	TC4H	R/W	Bit 15	Bit 14	Bit 13	Bit 12	Bit 11	Bit 10	Bit 9	Bit 8
0x0059	TC4L	R/W	Bit 7	Bit 6	Bit 5	Bit 4	Bit 3	Bit 2	Bit 1	Bit 0
0x005A	TC5H	R/W	Bit 15	Bit 14	Bit 13	Bit 12	Bit 11	Bit 10	Bit 9	Bit 8
0x005B	TC5L	R/W	Bit 7	Bit 6	Bit 5	Bit 4	Bit 3	Bit 2	Bit 1	Bit 0
0x005C	TC6H	R/W	Bit 15	Bit 14	Bit 13	Bit 12	Bit 11	Bit 10	Bit 9	Bit 8
0x005D	TC6L	R/W	Bit 7	Bit 6	Bit 5	Bit 4	Bit 3	Bit 2	Bit 1	Bit 0
0x005E	TC7H	R/W	Bit 15	Bit 14	Bit 13	Bit 12	Bit 11	Bit 10	Bit 9	Bit 8
0x005F	TC7L	R/W	Bit 7	Bit 6	Bit 5	Bit 4	Bit 3	Bit 2	Bit 1	Bit 0
0x0060	PACTL	R	0	PAEN	PAMOD	PEDGE	CLK1	CLK0	PAOVI	PAI
		W								
0x0061	PAFLG	R	0	0	0	0	0	0	PAOVF	PAIF
		W								
0x0062	PACNTH	R/W	PACNT15	PACNT14	PACNT13	PACNT12	PACNT11	PACNT10	PACNT9	PACNT8
0x0063	PACNTL	R/W	PACNT7	PACNT6	PACNT5	PACNT4	PACNT3	PACNT2	PACNT1	PACNT0
0x0064–0x006B	Reserved	R	0	0	0	0	0	0	0	0
		W								
0x006C	OCPD	R/W	OCPD7	OCPD6	OCPD5	OCPD4	OCPD3	OCPD2	OCPD1	OCPD0
0x006D	Reserved	R								
		W								
0x006E	PTPSR	R/W	PTPS7	PTPS6	PTPS5	PTPS4	PTPS3	PTPS2	PTPS1	PTPS0
0x006F	Reserved	R	0	0	0	0	0	0	0	0
		W								

0x0070–0x00C7 Reserved Register Space

Address	Name		Bit 7	Bit 6	Bit 5	Bit 4	Bit 3	Bit 2	Bit 1	Bit 0
0x0070-0x00C7	Reserved	R	0	0	0	0	0	0	0	0
		W								

0x00C8–0x00CF Asynchronous Serial Interface (SCI0) Map

Address	Name		Bit 7	Bit 6	Bit 5	Bit 4	Bit 3	Bit 2	Bit 1	Bit 0
0x00C8	SCI0BDH[1]	R/W	IREN	TNP1	TNP0	SBR12	SBR11	SBR10	SBR9	SBR8
0x00C9	SCI0BDL[1]	R/W	SBR7	SBR6	SBR5	SBR4	SBR3	SBR2	SBR1	SBR0
0x00CA	SCI0CR1[1]	R/W	LOOPS	SCISWAI	RSRC	M	WAKE	ILT	PE	PT
0x00C8	SCI0ASR1[2]	R	RXEDGIF	0	0	0	0	BERRV	BERRIF	BKDIF
		W								
0x00C9	SCI0ACR1[2]	R	RXEDGIE	0	0	0	0	0	BERRIE	BKDIE
		W								
0x00CA	SCI0ACR2[2]	R	0	0	0	0	0	BERRM1	BERRM0	BKDFE
		W								
0x00CB	SCI0CR2	R/W	TIE	TCIE	RIE	ILIE	TE	RE	RWU	SBK
0x00CC	SCI0SR1	R	TDRE	TC	RDRF	IDLE	OR	NF	FE	PF
		W								
0x00CD	SCI0SR2	R	AMAP	0	0	TXPOL	RXPOL	BRK13	TXDIR	RAF
		W								
0x00CE	SCI0DRH	R	R8	T8	0	0	0	0	0	0
		W								
0x00CF	SCI0DRL	R	R7	R6	R5	R4	R3	R2	R1	R0
		W	T7	T6	T5	T4	T3	T2	T1	T0

1 Those registers are accessible if the AMAP bit in the SCI0SR2 register is set to zero
2 Those registers are accessible if the AMAP bit in the SCI0SR2 register is set to one

0x00D0–0x00D7 Asynchronous Serial Interface (SCI1) Map

Address	Name		Bit 7	Bit 6	Bit 5	Bit 4	Bit 3	Bit 2	Bit 1	Bit 0
0x00D0	SCI1BDH[1]	R/W	IREN	TNP1	TNP0	SBR12	SBR11	SBR10	SBR9	SBR8
0x00D1	SCI1BDL[1]	R/W	SBR7	SBR6	SBR5	SBR4	SBR3	SBR2	SBR1	SBR0
0x00D2	SCI1CR1[1]	R/W	LOOPS	SCISWAI	RSRC	M	WAKE	ILT	PE	PT
0x00D0	SCI1ASR1[2]	R	RXEDGIF	0	0	0	0	BERRV	BERRIF	BKDIF
		W								
0x00D1	SCI1ACR1[2]	R	RXEDGIE	0	0	0	0	0	BERRIE	BKDIE
		W								
0x00D2	SCI1ACR2[2]	R	0	0	0	0	0	BERRM1	BERRM0	BKDFE
		W								
0x00D3	SCI1CR2	R/W	TIE	TCIE	RIE	ILIE	TE	RE	RWU	SBK
0x00D4	SCI1SR1	R	TDRE	TC	RDRF	IDLE	OR	NF	FE	PF
		W								

0x00D0–0x00D7 Asynchronous Serial Interface (SCI1) Map (continued)

Address	Name		Bit 7	Bit 6	Bit 5	Bit 4	Bit 3	Bit 2	Bit 1	Bit 0
0x00D5	SCI1SR2	R	AMAP	0	0	TXPOL	RXPOL	BRK13	TXDIR	RAF
		W								
0x00D6	SCI1DRH	R	R8	T8	0	0	0	0	0	0
		W								
0x00D7	SCI1DRL	R	R7	R6	R5	R4	R3	R2	R1	R0
		W	T7	T6	T5	T4	T3	T2	T1	T0

1 Those registers are accessible if the AMAP bit in the SCI1SR2 register is set to zero
2 Those registers are accessible if the AMAP bit in the SCI1SR2 register is set to one

0x00D8–0x00DF Serial Peripheral Interface (SPI0) Map

Address	Name		Bit 7	Bit 6	Bit 5	Bit 4	Bit 3	Bit 2	Bit 1	Bit 0
0x00D8	SPI0CR1	R	SPIE	SPE	SPTIE	MSTR	CPOL	CPHA	SSOE	LSBFE
		W								
0x00D9	SPI0CR2	R	0	XFRW	0	MODFEN	BIDIROE	0	SPISWAI	SPC0
		W								
0x00DA	SPI0BR	R	0	SPPR2	SPPR1	SPPR0	0	SPR2	SPR1	SPR0
		W								
0x00DB	SPI0SR	R	SPIF	0	SPTEF	MODF	0	0	0	0
		W								
0x00DC	SPI0DRH	R	R15	R14	R13	R12	R11	R10	R9	R8
		W	T15	T14	T13	T12	T11	T10	T9	T8
0x00DD	SPI0DRL	R	R7	R6	R5	R4	R3	R2	R1	R0
		W	T7	T6	T5	T4	T3	T2	T1	T0
0x00DE	Reserved	R	0	0	0	0	0	0	0	0
		W								
0x00DF	Reserved	R	0	0	0	0	0	0	0	0
		W								

0x00E0–0x00FF Reserved Register Space

Address	Name		Bit 7	Bit 6	Bit 5	Bit 4	Bit 3	Bit 2	Bit 1	Bit 0
0x00E0-0x00FF	Reserved	R	0	0	0	0	0	0	0	0
		W								

0x0100–0x0113 NVM Control Register (FTMR) Map

Address	Name		Bit 7	Bit 6	Bit 5	Bit 4	Bit 3	Bit 2	Bit 1	Bit 0
0x0100	FCLKDIV	R	FDIVLD	FDIV6	FDIV5	FDIV4	FDIV3	FDIV2	FDIV1	FDIV0
		W								
0x0101	FSEC	R	KEYEN1	KEYEN0	RNV5	RNV4	RNV3	RNV2	SEC1	SEC0
		W								
0x0102	FCCOBIX	R	0	0	0	0	0	CCOBIX2	CCOBIX1	CCOBIX0
		W								
0x0103	FECCRIX	R	0	0	0	0	0	ECCRIX2	ECCRIX1	ECCRIX0
		W								

0x0100–0x0113 NVM Control Register (FTMR) Map (continued)

Address	Name		Bit 7	Bit 6	Bit 5	Bit 4	Bit 3	Bit 2	Bit 1	Bit 0
0x0104	FCNFG	R	CCIE	0	0	IGNSF	0	0	FDFD	FSFD
		W								
0x0105	FERCNFG	R	0	0	0	0	0	0	DFDIE	SFDIE
		W								
0x0106	FSTAT	R	CCIF	0	ACCERR	FPVIOL	MGBUSY	RSVD	MGSTAT1	MGSTAT0
		W								
0x0107	FERSTAT	R	0	0	0	0	0	0	DFDIF	SFDIF
		W								
0x0108	FPROT	R	FPOPEN	RNV6	FPHDIS	FPHS1	FPHS0	FPLDIS	FPLS1	FPLS0
		W								
0x0109	DFPROT	R	DPOPEN	0	0	DPS4	DPS3	DPS2	DPS1	DPS0
		W								
0x010A	FCCOBHI	R	CCOB15	CCOB14	CCOB13	CCOB12	CCOB11	CCOB10	CCOB9	CCOB8
		W								
0x010B	FCCOBLO	R	CCOB7	CCOB6	CCOB5	CCOB4	CCOB3	CCOB2	CCOB1	CCOB0
		W								
0x010C	Reserved	R	0	0	0	0	0	0	0	0
		W								
0x010D	Reserved	R	0	0	0	0	0	0	0	0
		W								
0x010E	FECCRHI	R	ECCR15	ECCR14	ECCR13	ECCR12	ECCR11	ECCR10	ECCR9	ECCR8
		W								
0x010F	FECCRLO	R	ECCR7	ECCR6	ECCR5	ECCR4	ECCR3	ECCR2	ECCR1	ECCR0
		W								
0x0110	FOPT	R	NV7	NV6	NV5	NV4	NV3	NV2	NV1	NV0
		W								
0x0111	Reserved	R	0	0	0	0	0	0	0	0
		W								
0x0112	Reserved	R	0	0	0	0	0	0	0	0
		W								
0x0113	Reserved	R	0	0	0	0	0	0	0	0
		W								

0x0114–0x011F Reserved Register Space

Address	Name		Bit 7	Bit 6	Bit 5	Bit 4	Bit 3	Bit 2	Bit 1	Bit 0
0x0114-0x011F	Reserved	R	0	0	0	0	0	0	0	0
		W								

0x0120–0x012F Interrupt Module (S12XINT) Map

Address	Name		Bit 7	Bit 6	Bit 5	Bit 4	Bit 3	Bit 2	Bit 1	Bit 0
0x0120	Reserved	R	0	0	0	0	0	0	0	0
		W								
0x0121	IVBR	R/W	IVB_ADDR[7:0]							
0x0122	Reserved	R	0	0	0	0	0	0	0	0
		W								
0x0123	Reserved	R	0	0	0	0	0	0	0	0
		W								
0x0124	Reserved	R	0	0	0	0	0	0	0	0
		W								
0x0125	Reserved	R	0	0	0	0	0	0	0	0
		W								
0x0126	INT_XGPRIO	R	0	0	0	0	0	XILVL[2:0]		
		W								
0x0127	INT_CFADDR	R	INT_CFADDR[7:4]				0	0	0	0
		W								
0x0128	INT_CFDATA0	R	RQST	0	0	0	0	PRIOLVL[2:0]		
		W								
0x0129	INT_CFDATA1	R	RQST	0	0	0	0	PRIOLVL[2:0]		
		W								
0x012A	INT_CFDATA2	R	RQST	0	0	0	0	PRIOLVL[2:0]		
		W								
0x012B	INT_CFDATA3	R	RQST	0	0	0	0	PRIOLVL[2:0]		
		W								
0x012C	INT_CFDATA4	R	RQST	0	0	0	0	PRIOLVL[2:0]		
		W								
0x012D	INT_CFDATA5	R	RQST	0	0	0	0	PRIOLVL[2:0]		
		W								
0x012E	INT_CFDATA6	R	RQST	0	0	0	0	PRIOLVL[2:0]		
		W								
0x012F	INT_CFDATA7	R	RQST	0	0	0	0	PRIOLVL[2:0]		
		W								

0x00130–0x013F Reserved Register Space

Address	Name		Bit 7	Bit 6	Bit 5	Bit 4	Bit 3	Bit 2	Bit 1	Bit 0
0x0130-0x013F	Reserved	R	0	0	0	0	0	0	0	0
		W								

0x0140–0x017F MSCAN (CAN0) Map

Address	Name		Bit 7	Bit 6	Bit 5	Bit 4	Bit 3	Bit 2	Bit 1	Bit 0
0x0140	CAN0CTL0	R	RXFRM	RXACT	CSWAI	SYNCH	TIME	WUPE	SLPRQ	INITRQ
		W								
0x0141	CAN0CTL1	R	CANE	CLKSRC	LOOPB	LISTEN	BORM	WUPM	SLPAK	INITAK
		W								

0x0140–0x017F MSCAN (CAN0) Map (continued)

Address	Name		Bit 7	Bit 6	Bit 5	Bit 4	Bit 3	Bit 2	Bit 1	Bit 0
0x0142	CAN0BTR0	R/W	SJW1	SJW0	BRP5	BRP4	BRP3	BRP2	BRP1	BRP0
0x0143	CAN0BTR1	R/W	SAMP	TSEG22	TSEG21	TSEG20	TSEG13	TSEG12	TSEG11	TSEG10
0x0144	CAN0RFLG	R	WUPIF	CSCIF	RSTAT1	RSTAT0	TSTAT1	TSTAT0	OVRIF	RXF
		W								
0x0145	CAN0RIER	R/W	WUPIE	CSCIE	RSTATE1	RSTATE0	TSTATE1	TSTATE0	OVRIE	RXFIE
0x0146	CAN0TFLG	R	0	0	0	0	0	TXE2	TXE1	TXE0
		W								
0x0147	CAN0TIER	R	0	0	0	0	0	TXEIE2	TXEIE1	TXEIE0
		W								
0x0148	CAN0TARQ	R	0	0	0	0	0	ABTRQ2	ABTRQ1	ABTRQ0
		W								
0x0149	CAN0TAAK	R	0	0	0	0	0	ABTAK2	ABTAK1	ABTAK0
		W								
0x014A	CAN0TBSEL	R	0	0	0	0	0	TX2	TX1	TX0
		W								
0x014B	CAN0IDAC	R	0	0	IDAM1	IDAM0	0	IDHIT2	IDHIT1	IDHIT0
		W								
0x014C	Reserved	R	0	0	0	0	0	0	0	0
		W								
0x014D	CAN0MISC	R	0	0	0	0	0	0	0	BOHOLD
		W								
0x014E	CAN0RXERR	R	RXERR7	RXERR6	RXERR5	RXERR4	RXERR3	RXERR2	RXERR1	RXERR0
		W								
0x014F	CAN0TXERR	R	TXERR7	TXERR6	TXERR5	TXERR4	TXERR3	TXERR2	TXERR1	TXERR0
		W								
0x0150-0x0153	CAN0IDAR0-CAN0IDAR3	R/W	AC7	AC6	AC5	AC4	AC3	AC2	AC1	AC0
0x0154-0x0157	CAN0IDMR0-CAN0IDMR3	R/W	AM7	AM6	AM5	AM4	AM3	AM2	AM1	AM0
0x0158-0x015B	CAN0IDAR4-CAN0IDAR7	R/W	AC7	AC6	AC5	AC4	AC3	AC2	AC1	AC0
0x015C-0x015F	CAN0IDMR4-CAN0IDMR7	R/W	AM7	AM6	AM5	AM4	AM3	AM2	AM1	AM0
0x0160-0x016F	CAN0RXFG	R	FOREGROUND RECEIVE BUFFER (See Detailed MSCAN Foreground Receive and Transmit Buffer Layout)							
		W								
0x0170-0x017F	CAN0TXFG	R/W	FOREGROUND TRANSMIT BUFFER (See Detailed MSCAN Foreground Receive and Transmit Buffer Layout)							

Detailed MSCAN Foreground Receive and Transmit Buffer Layout

Address	Name		Bit 7	Bit 6	Bit 5	Bit 4	Bit 3	Bit 2	Bit 1	Bit 0
0xXXX0	Extended ID	R	ID28	ID27	ID26	ID25	ID24	ID23	ID22	ID21
	Standard ID	R	ID10	ID9	ID8	ID7	ID6	ID5	ID4	ID3
	CANxRIDR0	W								
0xXXX1	Extended ID	R	ID20	ID19	ID18	SRR=1	IDE=1	ID17	ID16	ID15
	Standard ID	R	ID2	ID1	ID0	RTR	IDE=0			
	CANxRIDR1	W								
0xXXX2	Extended ID	R	ID14	ID13	ID12	ID11	ID10	ID9	ID8	ID7
	Standard ID	R								
	CANxRIDR2	W								
0xXXX3	Extended ID	R	ID6	ID5	ID4	ID3	ID2	ID1	ID0	RTR
	Standard ID	R								
	CANxRIDR3	W								
0xXXX4-0xXXXB	CANxRDSR0-CANxRDSR7	R	DB7	DB6	DB5	DB4	DB3	DB2	DB1	DB0
		W								
0xXXXC	CANRxDLR	R					DLC3	DLC2	DLC1	DLC0
		W								
0xXXXD	Reserved	R								
		W								
0xXXXE	CANxRTSRH	R	TSR15	TSR14	TSR13	TSR12	TSR11	TSR10	TSR9	TSR8
		W								
0xXXXF	CANxRTSRL	R	TSR7	TSR6	TSR5	TSR4	TSR3	TSR2	TSR1	TSR0
		W								
0xXX10	Extended ID CANxTIDR0	R/W	ID28	ID27	ID26	ID25	ID24	ID23	ID22	ID21
	Standard ID	R/W	ID10	ID9	ID8	ID7	ID6	ID5	ID4	ID3
0xXX0xXX10	Extended ID CANxTIDR1	R/W	ID20	ID19	ID18	SRR=1	IDE=1	ID17	ID16	ID15
	Standard ID	R/W	ID2	ID1	ID0	RTR	IDE=0			
0xXX12	Extended ID CANxTIDR2	R/W	ID14	ID13	ID12	ID11	ID10	ID9	ID8	ID7
	Standard ID	R/W								
0xXX13	Extended ID CANxTIDR3	R/W	ID6	ID5	ID4	ID3	ID2	ID1	ID0	RTR
	Standard ID	R/W								
0xXX14-0xXX1B	CANxTDSR0–CANxTDSR7	R/W	DB7	DB6	DB5	DB4	DB3	DB2	DB1	DB0
0xXX1C	CANxTDLR	R/W					DLC3	DLC2	DLC1	DLC0
0xXX1D	CANxTTBPR	R/W	PRIO7	PRIO6	PRIO5	PRIO4	PRIO3	PRIO2	PRIO1	PRIO0
0xXX1E	CANxTTSRH	R	TSR15	TSR14	TSR13	TSR12	TSR11	TSR10	TSR9	TSR8
		W								

Detailed MSCAN Foreground Receive and Transmit Buffer Layout (continued)

Address	Name		Bit 7	Bit 6	Bit 5	Bit 4	Bit 3	Bit 2	Bit 1	Bit 0
0xXX1F	CANxTTSRL	R	TSR7	TSR6	TSR5	TSR4	TSR3	TSR2	TSR1	TSR0
		W								

0x0180–0x023F Reserved Register Space

Address	Name		Bit 7	Bit 6	Bit 5	Bit 4	Bit 3	Bit 2	Bit 1	Bit 0
0x0180-0x023F	Reserved	R	0	0	0	0	0	0	0	0
		W								

0x0240–0x027F Port Integration Module (PIM) Map 5 of 5

Address	Name		Bit 7	Bit 6	Bit 5	Bit 4	Bit 3	Bit 2	Bit 1	Bit 0
0x0240	PTT	R/W	PTT7	PTT6	PTT5	PTT4	PTT3	PTT2	PTT1	PTT0
0x0241	PTIT	R	PTIT7	PTIT6	PTIT5	PTIT4	PTIT3	PTIT2	PTIT1	PTIT0
		W								
0x0242	DDRT	R/W	DDRT7	DDRT6	DDRT5	DDRT4	DDRT3	DDRT2	DDRT1	DDRT0
0x0243	RDRT	R/W	RDRT7	RDRT6	RDRT5	RDRT4	RDRT3	RDRT2	RDRT1	RDRT0
0x0244	PERT	R/W	PERT7	PERT6	PERT5	PERT4	PERT3	PERT2	PERT1	PERT0
0x0245	PPST	R/W	PPST7	PPST6	PPST5	PPST4	PPST3	PPST2	PPST1	PPST0
0x0246	Reserved	R	0	0	0	0	0	0	0	0
		W								
0x0247	PTTRR	R	PTTRR7	PTTRR6	PTTRR5	PTTRR4	0	PTTRR2	PTTRR1	PTTRR0
		W								

0x0240–0x027F Port Integration Module (PIM) Map 5 of 5

Address	Name		Bit 7	Bit 6	Bit 5	Bit 4	Bit 3	Bit 2	Bit 1	Bit 0
0x0248	PTS	R/W	PTS7	PTS6	PTS5	PTS4	PTS3	PTS2	PTS1	PTS0
0x0249	PTIS	R	PTIS7	PTIS6	PTIS5	PTIS4	PTIS3	PTIS2	PTIS1	PTIS0
		W								
0x024A	DDRS	R/W	DDRS7	DDRS6	DDRS5	DDRS4	DDRS3	DDRS2	DDRS1	DDRS0
0x024B	RDRS	R/W	RDRS7	RDRS6	RDRS5	RDRS4	RDRS3	RDRS2	RDRS1	RDRS0
0x024C	PERS	R/W	PERS7	PERS6	PERS5	PERS4	PERS3	PERS2	PERS1	PERS0
0x024D	PPSS	R/W	PPSS7	PPSS6	PPSS5	PPSS4	PPSS3	PPSS2	PPSS1	PPSS0
0x024E	WOMS	R/W	WOMS7	WOMS6	WOMS5	WOMS4	WOMS3	WOMS2	WOMS1	WOMS0
0x024F	Reserved	R	0	0	0	0	0	0	0	0
		W								
0x0250	PTM	R/W	PTM7	PTM6	PTM5	PTM4	PTM3	PTM2	PTM1	PTM0
0x0251	PTIM	R	PTIM7	PTIM6	PTIM5	PTIM4	PTIM3	PTIM2	PTIM1	PTIM0
		W								
0x0252	DDRM	R/W	DDRM7	DDRM6	DDRM5	DDRM4	DDRM3	DDRM2	DDRM1	DDRM0
0x0253	RDRM	R/W	RDRM7	RDRM6	RDRM5	RDRM4	RDRM3	RDRM2	RDRM1	RDRM0
0x0254	PERM	R/W	PERM7	PERM6	PERM5	PERM4	PERM3	PERM2	PERM1	PERM0
0x0255	PPSM	R/W	PPSM7	PPSM6	PPSM5	PPSM4	PPSM3	PPSM2	PPSM1	PPSM0
0x0256	WOMM	R/W	WOMM7	WOMM6	WOMM5	WOMM4	WOMM3	WOMM2	WOMM1	WOMM0
0x0257	MODRR	R	MODRR7	MODRR6	0	MODRR4	0	0	0	0
		W								
0x0258	PTP	R/W	PTP7	PTP6	PTP5	PTP4	PTP3	PTP2	PTP1	PTP0
0x0259	PTIP	R	PTIP7	PTIP6	PTIP5	PTIP4	PTIP3	PTIP2	PTIP1	PTIP0
		W								
0x025A	DDRP	R/W	DDRP7	DDRP6	DDRP5	DDRP4	DDRP3	DDRP2	DDRP1	DDRP0
0x025B	RDRP	R/W	RDRP7	RDRP6	RDRP5	RDRP4	RDRP3	RDRP2	RDRP1	RDRP0
0x025C	PERP	R/W	PERP7	PERP6	PERP5	PERP4	PERP3	PERP2	PERP1	PERP0
0x025D	PPSP	R/W	PPSP7	PPSP6	PPSP5	PPSP4	PPSP3	PPSP2	PPSP1	PPSS0
0x025E	PIEP	R/W	PIEP7	PIEP6	PIEP5	PIEP4	PIEP3	PIEP2	PIEP1	PIEP0
0x025F	PIFP	R/W	PIFP7	PIFP6	PIFP5	PIFP4	PIFP3	PIFP2	PIFP1	PIFP0

0x0240–0x027F Port Integration Module (PIM) Map 5 of 5

Address	Name		Bit 7	Bit 6	Bit 5	Bit 4	Bit 3	Bit 2	Bit 1	Bit 0
0x0260	PTH	R/W	PTH7	PTH6	PTH5	PTH4	PTH3	PTH2	PTH1	PTH0
0x0261	PTIH	R	PTIH7	PTIH6	PTIH5	PTIH4	PTIH3	PTIH2	PTIH1	PTIH0
		W								
0x0262	DDRH	R/W	DDRH7	DDRH6	DDRH5	DDRH4	DDRH3	DDRH2	DDRH1	DDRH0
0x0263	RDRH	R/W	RDRH7	RDRH6	RDRH5	RDRH4	RDRH3	RDRH2	RDRH1	RDRH0
0x0264	PERH	R/W	PERH7	PERH6	PERH5	PERH4	PERH3	PERH2	PERH1	PERH0
0x0265	PPSH	R/W	PPSH7	PPSH6	PPSH5	PPSH4	PPSH3	PPSH2	PPSH1	PPSH0
0x0266	PIEH	R/W	PIEH7	PIEH6	PIEH5	PIEH4	PIEH3	PIEH2	PIEH1	PIEH0
0x0267	PIFH	R/W	PIFH7	PIFH6	PIFH5	PIFH4	PIFH3	PIFH2	PIFH1	PIFH0
0x0268	PTJ	R/W	PTJ7	PTJ6	0	0	0	0	PTJ1	PTJ0
0x0269	PTIJ	R	PTIJ7	PTIJ6	0	0	0	0	PTIJ1	PTIJ0
		W								
0x026A	DDRJ	R/W	DDRJ7	DDRJ6	0	0	0	0	DDRJ1	DDRJ0
0x026B	RDRJ	R/W	RDRJ7	RDRJ6	0	0	0	0	RDRJ1	RDRJ0
0x026C	PERJ	R/W	PERJ7	PERJ6	0	0	0	0	PERJ1	PERJ0
0x026D	PPSJ	R/W	PPSJ7	PPSJ6	0	0	0	0	PPSJ1	PPSJ0
0x026E	PIEJ	R/W	PIEJ7	PIEJ6	0	0	0	0	PIEJ1	PIEJ0
0x026f	PIFJ	R/W	PIFJ7	PIFJ6	0	0	0	0	PIFJ1	PIFJ0
0x0270	PT0AD0	R/W	PT0AD07	PT0AD06	PT0AD05	PT0AD04	PT0AD03	PT0AD02	PT0AD01	PT0AD00
0x0271	PT1AD0	R/W	PT1AD07	PT1AD06	PT1AD05	PT1AD04	PT1AD03	PT1AD02	PT1AD01	PT1AD00
0x0272	DDR0AD0	R/W	DDR0AD07	DDR0AD06	DDR0AD05	DDR0AD04	DDR0AD03	DDR0AD02	DDR0AD01	DDR0AD00
0x0273	DDR1AD0	R/W	DDR1AD07	DDR1AD06	DDR1AD05	DDR1AD04	DDR1AD03	DDR1AD02	DDR1AD01	DDR1AD00
0x0274	RDR0AD0	R/W	RDR0AD07	RDR0AD06	RDR0AD05	RDR0AD04	RDR0AD03	RDR0AD02	RDR0AD01	RDR0AD00
0x0275	RDR1AD0	R/W	RDR1AD07	RDR1AD06	RDR1AD05	RDR1AD04	RDR1AD03	RDR1AD02	RDR1AD01	RDR1AD00

0x0240–0x027F Port Integration Module (PIM) Map 5 of 5

Address	Name		Bit 7	Bit 6	Bit 5	Bit 4	Bit 3	Bit 2	Bit 1	Bit 0
0x0276	PER0AD0	R/W	PER0AD07	PER0AD06	PER0AD05	PER0AD04	PER0AD03	PER0AD02	PER0AD01	PER0AD00
0x0277	PER1AD0	R/W	PER1AD07	PER1AD06	PER1AD05	PER1AD04	PER1AD03	PER1AD02	PER1AD01	PER1AD00
0x0278-0x027F	Reserved	R	0	0	0	0	0	0	0	0
		W								

0x0280–0x02BF Reserved Register Space

Address	Name		Bit 7	Bit 6	Bit 5	Bit 4	Bit 3	Bit 2	Bit 1	Bit 0
0x0280-0x02BF	Reserved	R	0	0	0	0	0	0	0	0
		W								

0x02C0–0x02EF Analog-to-Digital Converter 12-Bit 16-Channel (ATD0) Map

Address	Name		Bit 7	Bit 6	Bit 5	Bit 4	Bit 3	Bit 2	Bit 1	Bit 0
0x02C0	ATD0CTL0	R	0	0	0	0	WRAP3	WRAP2	WRAP1	WRAP0
		W								
0x02C1	ATD0CTL1	R/W	ETRIG SEL	SRES1	SRES0	SMP_DIS	ETRIG CH3	ETRIG CH2	ETRIG CH1	ETRIG CH0
0x02C2	ATD0CTL2	R	0	AFFC	ICLKSTP	ETRIGLE	ETRIGP	ETRIGE	ASCIE	ACMPIE
		W								
0x02C3	ATD0CTL3	R/W	DJM	S8C	S4C	S2C	S1C	FIFO	FRZ1	FRZ0
0x02C4	ATD0CTL4	R/W	SMP2	SMP1	SMP0	PRS4	PRS3	PRS2	PRS1	PRS0
0x02C5	ATD0CTL5	R	0	SC	SCAN	MULT	CD	CC	CB	CA
		W								
0x02C6	ATD0STAT0	R	SCF	0	ETORF	FIFOR	CC3	CC2	CC1	CC0
		W								
0x02C7	Reserved	R	0	0	0	0	0	0	0	0
		W								
0x02C8	ATD0CMPEH	R/W	CMPE15	CMPE14	CMPE13	CMPE12	CMPE11	CMPE10	CMPE9	CMPE8
0x02C9	ATD0CMPEL	R/W	CMPE7	CMPE6	CMPE5	CMPE4	CMPE3	CMPE2	CMPE1	CMPE0
0x02CA	ATD0STAT2H	R	CCF15	CCF14	CCF13	CCF12	CCF11	CCF10	CCF9	CCF8
		W								
0x02CB	ATD0STAT2L	R	CCF7	CCF6	CCF5	CCF4	CCF3	CCF2	CCF1	CCF0
		W								
0x02CC	ATD0DIENH	R/W	IEN15	IEN14	IEN13	IEN12	IEN11	IEN10	IEN9	IEN8
0x02CD	ATD0DIENL	R/W	IEN7	IEN6	IEN5	IEN4	IEN3	IEN2	IEN1	IEN0
0x02CE	ATD0CMPHTH	R/W	CMPHT15	CMPHT14	CMPHT13	CMPHT12	CMPHT11	CMPHT10	CMPHT9	CMPHT8

0x02C0–0x02EF Analog-to-Digital Converter 12-Bit 16-Channel (ATD0) Map (continued)

Address	Name		Bit 7	Bit 6	Bit 5	Bit 4	Bit 3	Bit 2	Bit 1	Bit 0
0x02CF	ATD0CMPHTL	R	CMPHT7	CMPHT6	CMPHT5	CMPHT4	CMPHT3	CMPHT2	CMPHT1	CMPHT0
		W								
0x02D0	ATD0DR0H	R	Bit15	14	13	12	11	10	9	Bit8
		W								
0x02D1	ATD0DR0L	R	Bit7	Bit6	0	0	0	0	0	0
		W								
0x02D2	ATD0DR1H	R	Bit15	14	13	12	11	10	9	Bit8
		W								
0x02D3	ATD0DR1L	R	Bit7	Bit6	0	0	0	0	0	0
		W								
0x02D4	ATD0DR2H	R	Bit15	14	13	12	11	10	9	Bit8
		W								
0x02D5	ATD0DR2L	R	Bit7	Bit6	0	0	0	0	0	0
		W								
0x02D6	ATD0DR3H	R	Bit15	14	13	12	11	10	9	Bit8
		W								
0x02D7	ATD0DR3L	R	Bit7	Bit6	0	0	0	0	0	0
		W								
0x02D8	ATD0DR4H	R	Bit15	14	13	12	11	10	9	Bit8
		W								
0x02D9	ATD0DR4L	R	Bit7	Bit6	0	0	0	0	0	0
		W								
0x02DA	ATD0DR5H	R	Bit15	14	13	12	11	10	9	Bit8
		W								
0x02DB	ATD0DR5L	R	Bit7	Bit6	0	0	0	0	0	0
		W								
0x02DC	ATD0DR6H	R	Bit15	14	13	12	11	10	9	Bit8
		W								
0x02DD	ATD0DR6L	R	Bit7	Bit6	0	0	0	0	0	0
		W								
0x02DE	ATD0DR7H	R	Bit15	14	13	12	11	10	9	Bit8
		W								
0x02DF	ATD0DR7L	R	Bit7	Bit6	0	0	0	0	0	0
		W								
0x02E0	ATD0DR8H	R	Bit15	14	13	12	11	10	9	Bit8
		W								
0x02E1	ATD0DR8L	R	Bit7	Bit6	0	0	0	0	0	0
		W								
0x02E2	ATD0DR9H	R	Bit15	14	13	12	11	10	9	Bit8
		W								
0x02E3	ATD0DR9L	R	Bit7	Bit6	0	0	0	0	0	0
		W								
0x02E4	ATD0DR10H	R	Bit15	14	13	12	11	10	9	Bit8
		W								
0x02E5	ATD0DR10L	R	Bit7	Bit6	0	0	0	0	0	0
		W								

0x02C0–0x02EF Analog-to-Digital Converter 12-Bit 16-Channel (ATD0) Map (continued)

Address	Name		Bit 7	Bit 6	Bit 5	Bit 4	Bit 3	Bit 2	Bit 1	Bit 0
0x02E6	ATD0DR11H	R	Bit15	14	13	12	11	10	9	Bit8
		W								
0x02E7	ATD0DR11L	R	Bit7	Bit6	0	0	0	0	0	0
		W								
0x02E8	ATD0DR12H	R	Bit15	14	13	12	11	10	9	Bit8
		W								
0x02E9	ATD0DR12L	R	Bit7	Bit6	0	0	0	0	0	0
		W								
0x02EA	ATD0DR13H	R	Bit15	14	13	12	11	10	9	Bit8
		W								
0x02EB	ATD0DR13L	R	Bit7	Bit6	0	0	0	0	0	0
		W								
0x02EC	ATD0DR14H	R	Bit15	14	13	12	11	10	9	Bit8
		W								
0x02ED	ATD0DR14L	R	Bit7	Bit6	0	0	0	0	0	0
		W								
0x02EE	ATD0DR15H	R	Bit15	14	13	12	11	10	9	Bit8
		W								
0x02EF	ATD0DR15L	R	Bit7	Bit6	0	0	0	0	0	0
		W								

0x02F0–0x02F7 Voltage Regulator (VREG_3V3) Map

Address	Name		Bit 7	Bit 6	Bit 5	Bit 4	Bit 3	Bit 2	Bit 1	Bit 0
0x02F0	VREGHTCL	R	0	0	VSEL	VAE	HTEN	HTDS	HTIE	HTIF
		W								
0x02F1	VREGCTRL	R	0	0	0	0	0	LVDS	LVIE	LVIF
		W								
0x02F2	VREGAPICL	R	APICLK	0	0	APIFES	APIEA	APIFE	APIE	APIF
		W								
0x02F3	VREGAPITR	R	APITR5	APITR4	APITR3	APITR2	APITR1	APITR0	0	0
		W								
0x02F4	VREGAPIRH	R	APIR15	APIR14	APIR13	APIR12	APIR11	APIR10	APIR9	APIR8
		W								
0x02F5	VREGAPIRL	R	APIR7	APIR6	APIR5	APIR4	APIR3	APIR2	APIR1	APIR0
		W								
0x02F6	Reserved	R	0	0	0	0	0	0	0	0
		W								
0x02F7	VREGHTTR	R	HTOEN	0	0	0	HTTR3	HTTR2	HTTR1	HTTR0
		W								

0x02F8–0x02FF Reserved

Address	Name		Bit 7	Bit 6	Bit 5	Bit 4	Bit 3	Bit 2	Bit 1	Bit 0
0x02F8–0x02FF	Reserved	R	0	0	0	0	0	0	0	0
		W								

0x0300–0x0327 Pulse Width Modulator 8-Bit 8-Channel (PWM) Map

Address	Name		Bit 7	Bit 6	Bit 5	Bit 4	Bit 3	Bit 2	Bit 1	Bit 0
0x0300	PWME	R/W	PWME7	PWME6	PWME5	PWME4	PWME3	PWME2	PWME1	PWME0
0x0301	PWMPOL	R/W	PPOL7	PPOL6	PPOL5	PPOL4	PPOL3	PPOL2	PPOL1	PPOL0
0x0302	PWMCLK	R/W	PCLK7	PCLK6	PCLK5	PCLK4	PCLK3	PCLK2	PCLK1	PCLK0
0x0303	PWMPRCLK	R	0	PCKB2	PCKB1	PCKB0	0	PCKA2	PCKA1	PCKA0
		W								
0x0304	PWMCAE	R/W	CAE7	CAE6	CAE5	CAE4	CAE3	CAE2	CAE1	CAE0
0x0305	PWMCTL	R	CON67	CON45	CON23	CON01	PSWAI	PFRZ	0	0
		W								
0x0306	PWMTST Test Only	R	0	0	0	0	0	0	0	0
		W								
0x0307	PWMPRSC	R	0	0	0	0	0	0	0	0
		W								
0x0308	PWMSCLA	R/W	Bit 7	6	5	4	3	2	1	Bit 0
0x0309	PWMSCLB	R/W	Bit 7	6	5	4	3	2	1	Bit 0
0x030A	PWMSCNTA	R	0	0	0	0	0	0	0	0
		W								
0x030B	PWMSCNTB	R	0	0	0	0	0	0	0	0
		W								
0x030C	PWMCNT0	R	Bit 7	6	5	4	3	2	1	Bit 0
		W	0	0	0	0	0	0	0	0
0x030D	PWMCNT1	R	Bit 7	6	5	4	3	2	1	Bit 0
		W	0	0	0	0	0	0	0	0
0x030E	PWMCNT2	R	Bit 7	6	5	4	3	2	1	Bit 0
		W	0	0	0	0	0	0	0	0
0x030F	PWMCNT3	R	Bit 7	6	5	4	3	2	1	Bit 0
		W	0	0	0	0	0	0	0	0
0x0310	PWMCNT4	R	Bit 7	6	5	4	3	2	1	Bit 0
		W	0	0	0	0	0	0	0	0
0x0311	PWMCNT5	R	Bit 7	6	5	4	3	2	1	Bit 0
		W	0	0	0	0	0	0	0	0
0x0312	PWMCNT6	R	Bit 7	6	5	4	3	2	1	Bit 0
		W	0	0	0	0	0	0	0	0
0x0313	PWMCNT7	R	Bit 7	6	5	4	3	2	1	Bit 0
		W	0	0	0	0	0	0	0	0
0x0314	PWMPER0	R/W	Bit 7	6	5	4	3	2	1	Bit 0
0x0315	PWMPER1	R/W	Bit 7	6	5	4	3	2	1	Bit 0
0x0316	PWMPER2	R/W	Bit 7	6	5	4	3	2	1	Bit 0

0x0300–0x0327 Pulse Width Modulator 8-Bit 8-Channel (PWM) Map

Address	Name		Bit 7	Bit 6	Bit 5	Bit 4	Bit 3	Bit 2	Bit 1	Bit 0
0x0317	PWMPER3	R W	Bit 7	6	5	4	3	2	1	Bit 0
0x0318	PWMPER4	R W	Bit 7	6	5	4	3	2	1	Bit 0
0x0319	PWMPER5	R W	Bit 7	6	5	4	3	2	1	Bit 0
0x031A	PWMPER6	R W	Bit 7	6	5	4	3	2	1	Bit 0
0x031B	PWMPER7	R W	Bit 7	6	5	4	3	2	1	Bit 0
0x031C	PWMDTY0	R W	Bit 7	6	5	4	3	2	1	Bit 0
0x031D	PWMDTY1	R W	Bit 7	6	5	4	3	2	1	Bit 0
0x031E	PWMDTY2	R W	Bit 7	6	5	4	3	2	1	Bit 0
0x031F	PWMDTY3	R W	Bit 7	6	5	4	3	2	1	Bit 0
0x0320	PWMDTY4	R W	Bit 7	6	5	4	3	2	1	Bit 0
0x0321	PWMDTY5	R W	Bit 7	6	5	4	3	2	1	Bit 0
0x0322	PWMDTY6	R W	Bit 7	6	5	4	3	2	1	Bit 0
0x0323	PWMDTY7	R W	Bit 7	6	5	4	3	2	1	Bit 0
0x0324	PWMSDN	R W	PWMIF	PWMIE	0 PWM RSTRT	PWMLVL	0	PWM7IN	PWM7INL	PWM7 ENA
0x0325	Reserved	R W	0	0	0	0	0	0	0	0
0x0326	Reserved	R W	0	0	0	0	0	0	0	0
0x0327	Reserved	R W	0	0	0	0	0	0	0	0

0x0328–0x033F Reserved

Address	Name		Bit 7	Bit 6	Bit 5	Bit 4	Bit 3	Bit 2	Bit 1	Bit 0
0x0328– 0x033F	Reserved	R W	0	0	0	0	0	0	0	0

0x00340–0x0367 – Periodic Interrupt Timer (PIT) Map

Address	Name		Bit 7	Bit 6	Bit 5	Bit 4	Bit 3	Bit 2	Bit 1	Bit 0
0x0340	PITCFLMT	R	PITE	PITSWAI	PITFRZ	0	0	0	0	0
		W							PFLMT1	PFLMT0
0x0341	PITFLT	R	0	0	0	0	0	0	0	0
		W					PFLT3	PFLT2	PFLT1	PFLT0
0x0342	PITCE	R	0	0	0	0	PCE3	PCE2	PCE1	PCE0
		W								
0x0343	PITMUX	R	0	0	0	0	PMUX3	PMUX2	PMUX1	PMUX0
		W								
0x0344	PITINTE	R	0	0	0	0	PINTE3	PINTE2	PINTE1	PINTE0
		W								
0x0345	PITTF	R	0	0	0	0	PTF3	PTF2	PTF1	PTF0
		W								
0x0346	PITMTLD0	R/W	PMTLD7	PMTLD6	PMTLD5	PMTLD4	PMTLD3	PMTLD2	PMTLD1	PMTLD0
0x0347	PITMTLD1	R/W	PMTLD7	PMTLD6	PMTLD5	PMTLD4	PMTLD3	PMTLD2	PMTLD1	PMTLD0
0x0348	PITLD0 (hi)	R/W	PLD15	PLD14	PLD13	PLD12	PLD11	PLD10	PLD9	PLD8
0x0349	PITLD0 (lo)	R/W	PLD7	PLD6	PLD5	PLD4	PLD3	PLD2	PLD1	PLD0
0x034A	PITCNT0 (hi)	R/W	PCNT15	PCNT14	PCNT13	PCNT12	PCNT11	PCNT10	PCNT9	PCNT8
0x034B	PITCNT0 (lo)	R/W	PCNT7	PCNT6	PCNT5	PCNT4	PCNT3	PCNT2	PCNT1	PCNT0
0x034C	PITLD1 (hi)	R/W	PLD15	PLD14	PLD13	PLD12	PLD11	PLD10	PLD9	PLD8
0x034D	PITLD1 (lo)	R/W	PLD7	PLD6	PLD5	PLD4	PLD3	PLD2	PLD1	PLD0
0x034E	PITCNT1 (hi)	R/W	PCNT15	PCNT14	PCNT13	PCNT12	PCNT11	PCNT10	PCNT9	PCNT8
0x034F	PITCNT1 (lo)	R/W	PCNT7	PCNT6	PCNT5	PCNT4	PCNT3	PCNT2	PCNT1	PCNT0
0x0350	PITLD2 (hi)	R/W	PLD15	PLD14	PLD13	PLD12	PLD11	PLD10	PLD9	PLD8
0x0351	PITLD2 (lo)	R/W	PLD7	PLD6	PLD5	PLD4	PLD3	PLD2	PLD1	PLD0
0x0352	PITCNT2 (hi)	R/W	PCNT15	PCNT14	PCNT13	PCNT12	PCNT11	PCNT10	PCNT9	PCNT8
0x0353	PITCNT2 (lo)	R/W	PCNT7	PCNT6	PCNT5	PCNT4	PCNT3	PCNT2	PCNT1	PCNT0
0x0354	PITLD3 (hi)	R/W	PLD15	PLD14	PLD13	PLD12	PLD11	PLD10	PLD9	PLD8
0x0355	PITLD3 (lo)	R/W	PLD7	PLD6	PLD5	PLD4	PLD3	PLD2	PLD1	PLD0

Address	Name		Bit 7	Bit 6	Bit 5	Bit 4	Bit 3	Bit 2	Bit 1	Bit 0
0x0356	PITCNT3 (hi)	R/W	PCNT15	PCNT14	PCNT13	PCNT12	PCNT11	PCNT10	PCNT9	PCNT8
0x0357	PITCNT3 (lo)	R/W	PCNT7	PCNT6	PCNT5	PCNT4	PCNT3	PCNT2	PCNT1	PCNT0
0x0358–0x0367	Reserved	R	0	0	0	0	0	0	0	0
		W								

0x0368–0x077F Reserved

Address	Name		Bit 7	Bit 6	Bit 5	Bit 4	Bit 3	Bit 2	Bit 1	Bit 0
0x0368	Reserved	R	0	0	0	0	0	0	0	0
		W								

Appendix F
Ordering Information

F.1 Ordering Information

The following figure provides an ordering part number example for the devices covered by this data book. There are two options when ordering a device. Customers must choose between ordering either the mask-specific part number or the generic / mask-independent part number. Ordering the mask-specific part number enables the customer to specify which particular maskset they will receive whereas ordering the generic maskset means that FSL will ship the currently preferred maskset (which may change over time). In either case, the marking on the device will always show the generic / mask-independent peritoneums and the mask set number.

NOTE

The max length for the part number is 15 characters. Due to this limitation, in some situations, some characters are omitted. The mask identifier suffix and the Tape & Reel suffix are often both omitted from the part number which is actually marked on the device.

For specific part numbers to order, please contact your local sales office. The below figure illustrates the structure of a typical mask-specific ordering number for the S12XS family devices.

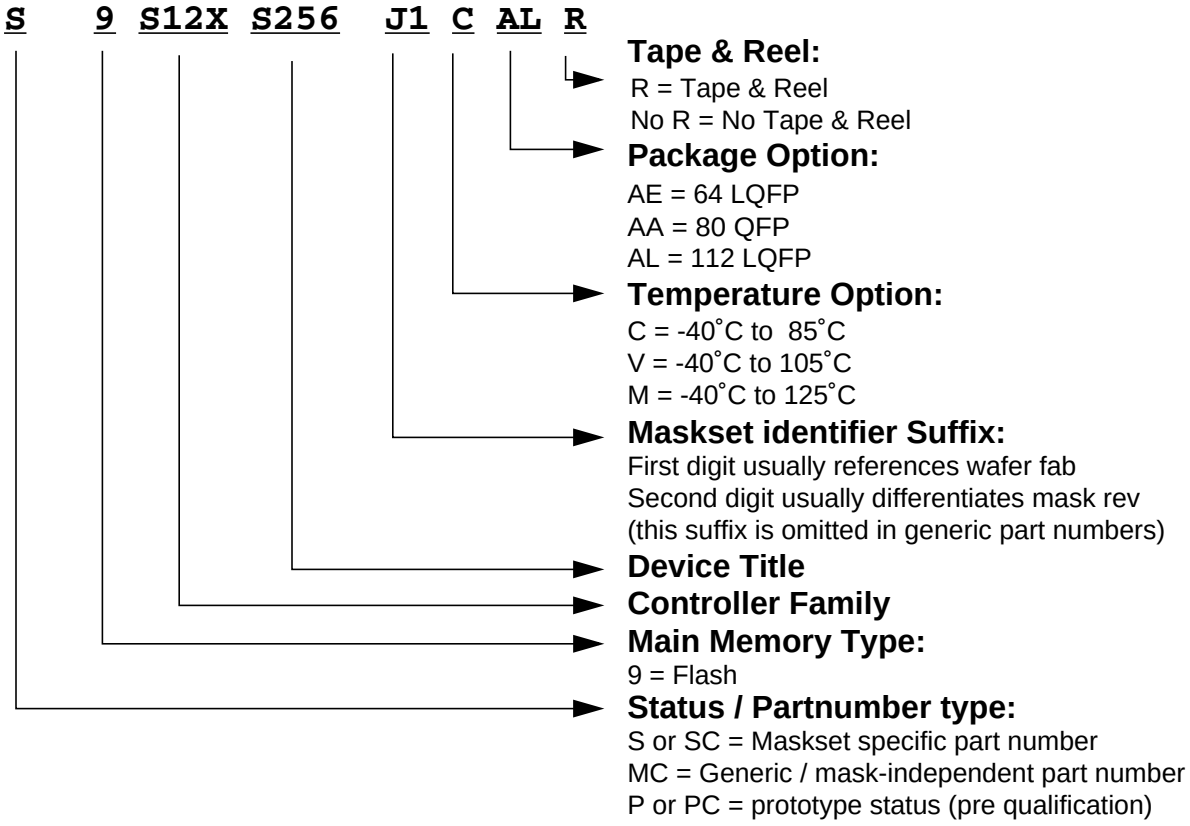

Figure F-1. Order Part Number Example

How to Reach Us:

Home Page:
www.freescale.com

USA/Europe or Locations Not Listed:
Freescale Semiconductor
Technical Information Center, CH370
1300 N. Alma School Road
Chandler, Arizona 85224
1-800-521-6274 or 480-768-2130

Europe, Middle East, and Africa:
+44 1296 380 456 (English)
+46 8 52200080 (English)
+49 89 92103 559 (German)
+33 1 69 35 48 48 (French)

Japan:
Freescale Semiconductor Japan Ltd.
Technical Information Center
3-20-1, Minami-Azabu, Minato-ku
Tokyo 106-0047, Japan
0120-191014 or +81-3-3440-3569

Asia/Pacific:
Freescale Semiconductor Hong Kong Ltd.
Technical Information Center
2 Dai King Street
Tai Po Industrial Estate
Tai Po, N.T., Hong Kong
852-26668334

For Literature Requests Only:
Freescale Semiconductor Literature Distribution Center
P.O. Box 5405
Denver, Colorado 80217
1-800-441-2447 or 303-675-2140
Fax: 303-675-2150

Information in this document is provided solely to enable system and software implementers to use Freescale Semiconductor products. There are no express or implied copyright licenses granted hereunder to design or fabricate any integrated circuits or integrated circuits based on the information in this document.

Freescale Semiconductor reserves the right to make changes without further notice to any products herein. Freescale Semiconductor makes no warranty, representation or guarantee regarding the suitability of its products for any particular purpose, nor does Freescale Semiconductor assume any liability arising out of the application or use of any product or circuit, and specifically disclaims any and all liability, including without limitation consequential or incidental damages. “Typical” parameters that may be provided in Freescale Semiconductor data sheets and/or specifications can and do vary in different applications and actual performance may vary over time. All operating parameters, including “Typicals”, must be validated for each customer application by customer’s technical experts. Freescale Semiconductor does not convey any license under its patent rights nor the rights of others. Freescale Semiconductor products are not designed, intended, or authorized for use as components in systems intended for surgical implant into the body, or other applications intended to support or sustain life, or for any other application in which the failure of the Freescale Semiconductor product could create a situation where personal injury or death may occur. Should Buyer purchase or use Freescale Semiconductor products for any such unintended or unauthorized application, Buyer shall indemnify and hold Freescale Semiconductor and its officers, employees, subsidiaries, affiliates, and distributors harmless against all claims, costs, damages, and expenses, and reasonable attorney fees arising out of, directly or indirectly, any claim of personal injury or death associated with such unintended or unauthorized use, even if such claim alleges that Freescale Semiconductor was negligent regarding the design or manufacture of the part.

Freescale™ and the Freescale logo are trademarks of Freescale Semiconductor, Inc. All other product or service names are the property of their respective owners. Java and all other Java-based marks are trademarks or registered trademarks of Sun Microsystems, Inc. in the U.S. and other countries.

© Freescale Semiconductor, Inc. 2007. All rights reserved.

MC9S12XS256RMV1
Rev. 1.13
08/2012