THIS DRAWING IS UNPUBLISHED. RELEASED FOR PUBLICATION -,- .
© COPYRIGHT - BY TYCO ELECTRONICS CORPORATION. ALL INTERNATIONAL RIGHTS RESERVED.

LOC	DIST
G	02

REVISIONS

P	LTR	DESCRIPTION	DATE	DWN	APVD
	E	REDRAWN PER ECR 09-024066	04FEB10	JR	TM

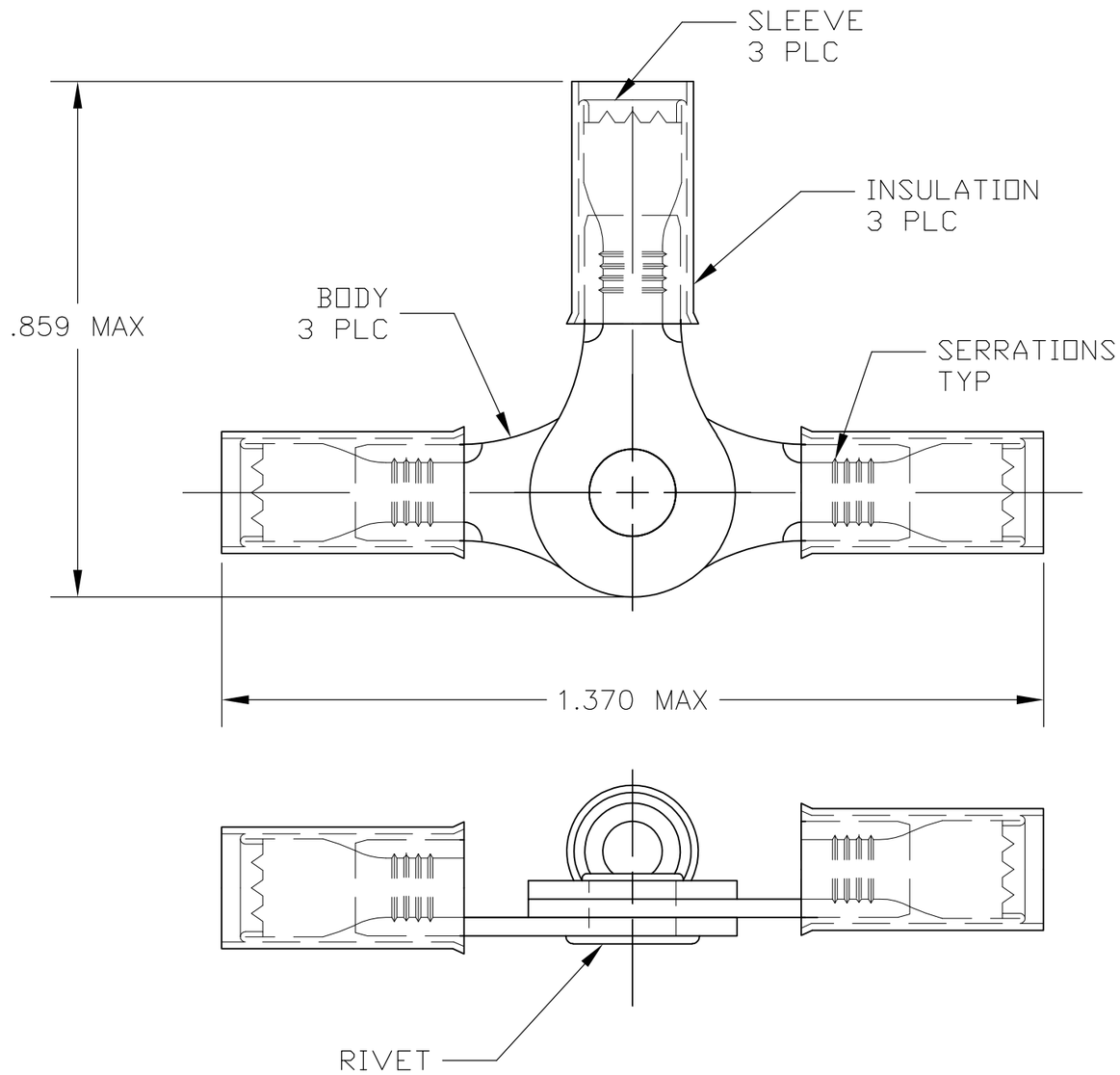

1 TONGUE MATERIAL THK IS .031±.002

2 FOR .115-.170 WIRE INSULATION DIA

3 BODY & SLEEVE: COPPER PER ASTM B152
TIN PLATE PER ASTM B545, ANNEALED

INSULATION: NYLON, COLOR - BLUE

RIVET: BRASS PER ASTM B36
TIN PLATE PER ASTM B545

4 SUPERSEDED BY 53222-1

QTY	PACKAGING TYPE	PART NUMBER
50	LOOSE PIECE, BOX SPECIAL	4 8-53222-5
10	LOOSE PIECE, BAG	4 8-53222-4
25	LOOSE PIECE, BOX	4 8-53222-3
1000	LOOSE PIECE	53222-1

THIS DRAWING IS A CONTROLLED DOCUMENT.

DIMENSIONS: INCHES

TOLERANCES UNLESS OTHERWISE SPECIFIED:

0 PLC	± -
1 PLC	± -
2 PLC	± -
3 PLC	± .008
4 PLC	± -
ANGLES	± 5°

MATERIAL - 3

FINISH - 3

DWN jr ruth 04FEB10
CHK TOM MICHIELUTTI 04FEB10
APVD TOM MICHIELUTTI 04FEB10
PRODUCT SPEC —
APPLICATION SPEC —
WEIGHT —

CUSTOMER DRAWING

Tyco Electronics
Tyco Electronics Corporation
Harrisburg, PA 17105-3608

NAME
TERMINAL, PIDG, NYLON,
RING TONGUE, 3 WAY CONNECTOR
—

SIZE	CAGE CODE	DRAWING NO	RESTRICTED TO
A3	00779	C-53222	—

SCALE	SHEET	REV
8:1	1 OF 1	E