DRAWING MADE IN THIRD ANGLE PROJECTION
THIS DRAWING IS UNPUBLISHED. RELEASED FOR PUBLICATION ,19 .
© COPYRIGHT 19 BY AMP INCORPORATED. ALL INTERNATIONAL RIGHTS RESERVED.

LOC	DIST
AD	25

REVISIONS

P	F	ZONE	LTR	DESCRIPTION	DATE	APPD
			O	DRAWN	–	–
			A	EC 0010-1455-95	1/23/96	CR
			B	EC 0010-1484-95	4/1/96	CR
			C	EC 0504-0087-96	11/18/96	CR
			D	REV PER EC 0U1B-0391-00	10 JAN 01	CR

1. HOUSING MATERIAL: GLASS-FILLED POLYESTER. COLOR: GRAY.
2. CONTACT MATERIAL: PHOSPHOR BRONZE.
3. CONTACT FINISH: DIN 41612 CLASS 2 IN CONTACT AREA. TIN-LEAD ON POSTS.
4. CONTACT FINISH: DIN 41612 CLASS 3 IN CONTACT AREA. TIN-LEAD ON POSTS.
5. PART NUMBER, DATE CODE IDENTIFICATION, CSA LOGO IN THIS APPROXIMATE AREA ON OPPOSITE SIDE SHOWN.
6. CONTACT POINT.
7. RECOMMENDED HOLE SIZE FOR MANUAL APPLICATION OF CONNECTOR ONTO PC BOARD.

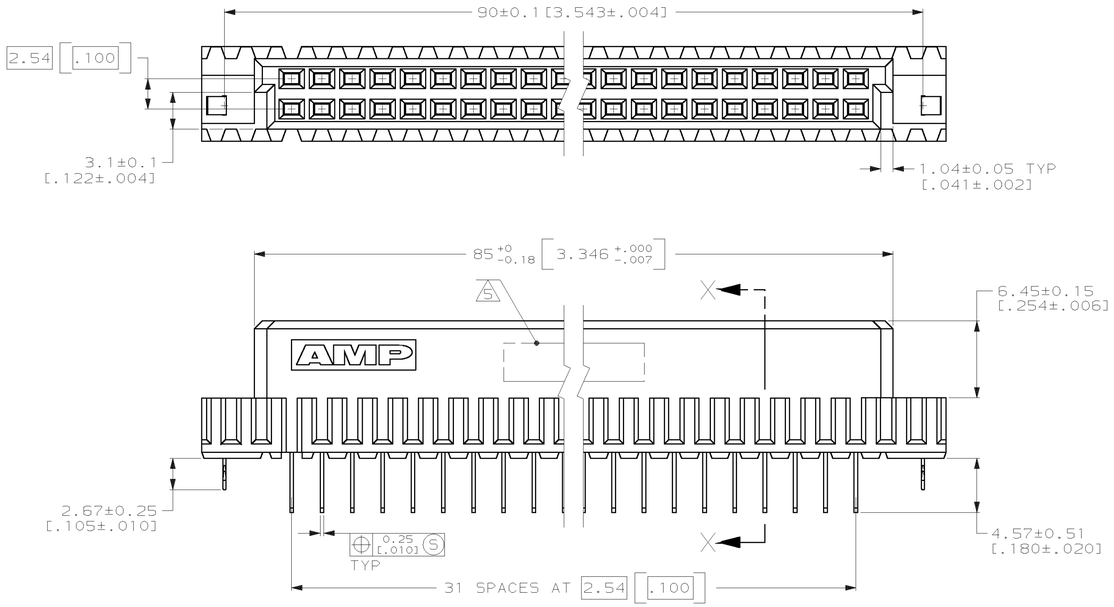

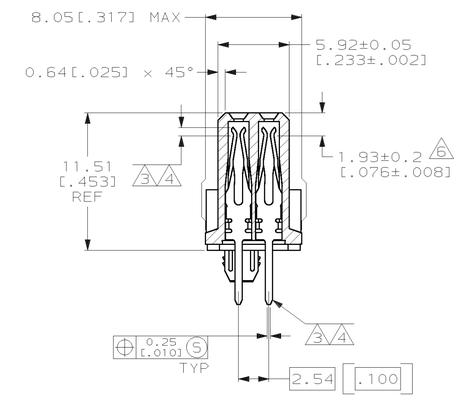

SECTION X-X

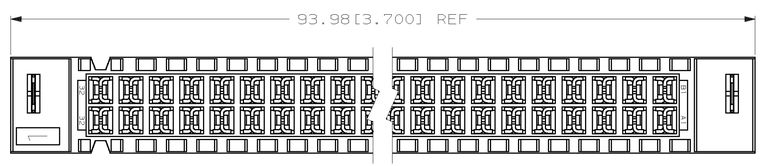

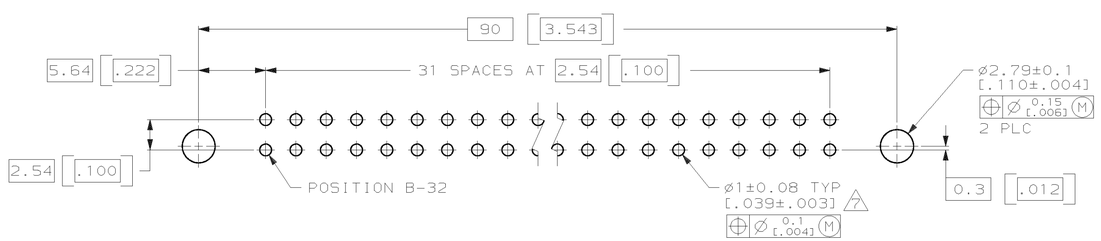

PC BOARD LAYOUT

SUPERSEDED BY 536458-5	4	1-32	X	X	64	536458-9
	3	1-32	X	X	64	536458-5
SUPERSEDED BY 536458-5	3	1-32	X	X	64	536458-4
		POSITIONS LOADED	ROWS LOADED B	ROWS LOADED A	NO. OF LOADED POSITIONS	ASSY PART NUMBER

PART NO

DO NOT SCALE PRINT.
UNLESS SPECIFIED
DIMENSIONS IN mm [INCHES]
TOLERANCES ON :
1 PLC DEC ± -
2 PLC DEC ± 0.13[.005]
ANGLES ± -

MATERIAL
HSG: 1 –
CONT: 2

FINISH
CONT: 3 4 –

DR L. BRINER 10/28/92
CHK R. PATTERSON 12/11/92
APPD R. PATTERSON 12/11/92
APPD D.C. RUBENDALL 12/11/92

PRODUCT SPEC –

APPLICATION SPEC –

WEIGHT –

AMP Incorporated
Harrisburg, PA 17105-3608

NAME
RECEPTACLE ASSEMBLY, EUROCARD, TYPE "B" WITH BOARD-LOCKS

SIZE	CAGE CODE	DRAWING NO
D	00779	C-536458

SCALE 4:1 SHEET 1 OF 1

THIS DRAWING IS A CONTROLLED DOCUMENT FOR AMP INCORPORATED. IT IS SUBJECT TO CHANGE AND THE CONTROLLING ENGINEERING ORGANIZATION SHOULD BE CONTACTED FOR THE LATEST REVISION.

CUSTOMER DRAWING