DRAWING MADE IN THIRD ANGLE PROJECTION

THIS DRAWING IS UNPUBLISHED. RELEASED FOR PUBLICATION ,19 .
© COPYRIGHT 19 BY AMP INCORPORATED. ALL INTERNATIONAL RIGHTS RESERVED.

LOC	DIST	P	F
AF	50		

REVISIONS

ZONE	LTR	DESCRIPTION	DATE	APPD
	B	REV PER OL10-0053-97	2/11/97	JR/JW

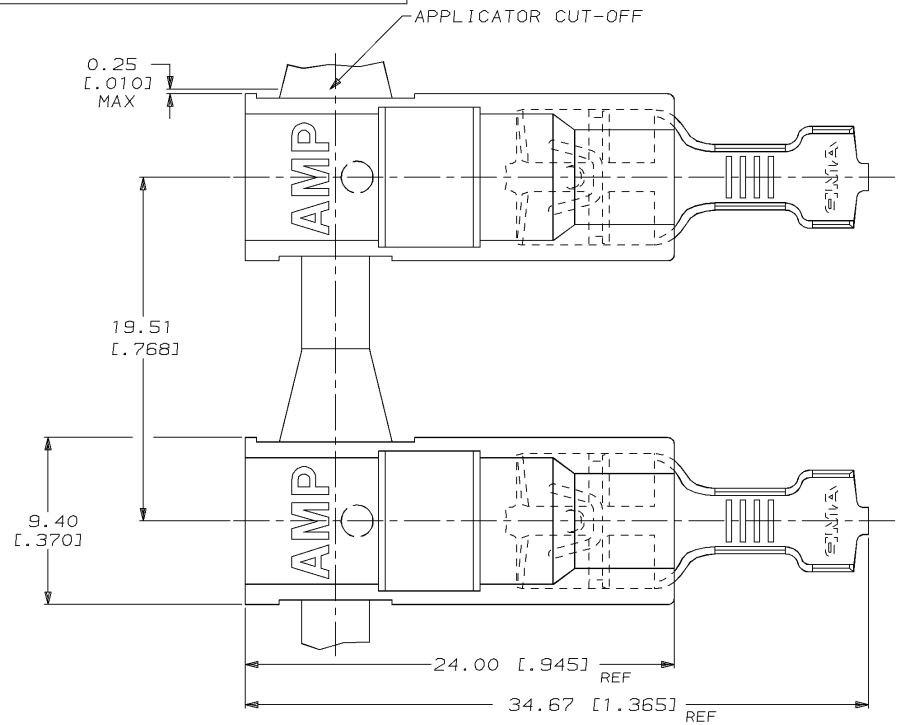

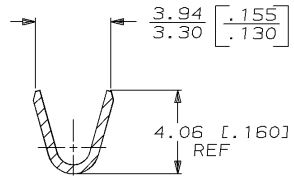

SECTION A–A

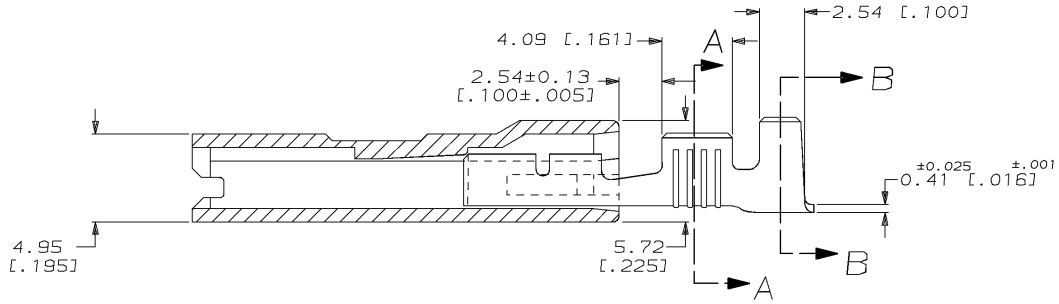

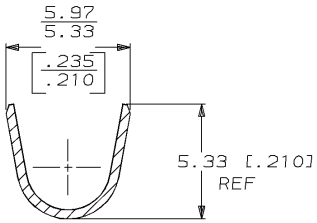

SECTION B–B

1 LOW-INSERTION FASTON TERMINALS, BASE P/N 63674-2 IS USED.

2 NICKEL PLATE 0.00381 [.000150] MIN

2.79-4.32 [.110-.170]	0.8-2.0 mm² [18-14]	0.813 [.032]	521113-1
INSULATION RANGE	WIRE SIZE	MATING TAB THK ±0.025 [±.001]	PART NO

DO NOT SCALE PRINT.
UNLESS SPECIFIED
DIMENSIONS IN mm [INCHES]
TOLERANCES ON :
2 PLC DEC ± -
3 PLC DEC ± 0.25 [.010]
ANGLES ± -

DR 3/13/96 JR RUTH
CHK 3/13/96 MS FEHER
APPD 3/13/96 D BRATINA
APPD 3/13/96 V KARABCIEVSCHY

MATERIAL
HOUSING 4/6 NYLON (150°C)
TERMINAL - #2H STEEL

PRODUCT SPEC
108-1285

FINISH
HOUSING - BLACK
TERMINAL - NICKEL 2

APPLICATION SPEC
114-2124

WEIGHT -

AMP AMP INCORPORATED Harrisburg, Pa. 17105

NAME
ASSEMBLY, ULTRA-POD,
RECEPTACLE, 6.35 [.250] SERIES

SIZE C | CAGE CODE 00779 | DRAWING NO 521113

SCALE 5:1 | SHEET 1 OF 1

521113

AMP 1471-6 REV 6-89

11-FEB-97 10:17:03 amp13469 /ws/dept2125/dwg2125/u.ultra-pod

CUSTOMER DRAWING