# NX3V1T66

## Low-ohmic single-pole single-throw analog switch

Rev. 7 — 2 November 2011 Product data sheet

## 1. General description

The NX3V1T66 is a low-ohmic single-pole single-throw analog switch. It has two input/output terminals (Y and Z) and an active HIGH enable input pin (E). When pin E is LOW, the analog switch is turned off.

Schmitt trigger action at the enable input (E) makes the circuit tolerant to slower input rise and fall times. A low input voltage threshold allows pin E to be driven by lower level logic signals without a significant increase in supply current $I_{CC}$. This makes it possible for the NX3V1T66 to switch 4.3 V signals with a 1.8 V digital controller, eliminating the need for logic level translation.

The NX3V1T66 allows signals with amplitude up to $V_{CC}$ to be transmitted from Y to Z or from Z to Y. Its ultra-low ON resistance (0.3 Ω) and flatness (0.1 Ω) ensures minimal attenuation and distortion of transmitted signals.

## 2. Features and benefits

- Wide supply voltage range from 1.4 V to 4.3 V
- Very low ON resistance (peak):
  - 0.8 Ω (typical) at $V_{CC}$ = 1.4 V
  - 0.5 Ω (typical) at $V_{CC}$ = 1.65 V
  - 0.3 Ω (typical) at $V_{CC}$ = 2.3 V
  - 0.25 Ω (typical) at $V_{CC}$ = 2.7 V
  - 0.25 Ω (typical) at $V_{CC}$ = 4.3 V
- High noise immunity
- ESD protection:
  - HBM JESD22-A114F Class 3A exceeds 7500 V
  - MM JESD22-A115-A exceeds 200 V
  - CDM AEC-Q100-011 revision B exceeds 1000 V
  - IEC61000-4-2 contact discharge exceeds 6000 V for switch ports
- CMOS low-power consumption
- Latch-up performance exceeds 100 mA per JESD 78B Class II Level A
- Enable input accepts voltages above supply voltage
- 1.8 V control logic at $V_{CC}$ = 3.6 V
- High current handling capability (500 mA continuous current under 3.3 V supply)
- Specified from –40 °C to +85 °C and from –40 °C to +125 °C

## 3. Applications

- Cell phone
- PDA
- Portable media player

## 4. Ordering information

**Table 1. Ordering information**

| Type number | Package | | | |
|---|---|---|---|---|
| | Temperature range | Name | Description | Version |
| NX3V1T66GW | –40 °C to +125 °C | TSSOP5 | plastic thin shrink small outline package; 5 leads; body width 1.25 mm | SOT353-1 |
| NX3V1T66GM | –40 °C to +125 °C | XSON6 | plastic extremely thin small outline package; no leads; 6 terminals; body 1 × 1.45 × 0.5 mm | SOT886 |

## 5. Marking

**Table 2. Marking codes[1]**

| Type number | Marking code |
|---|---|
| NX3V1T66GW | dO |
| NX3V1T66GM | dO |

[1] The pin 1 indicator is located on the lower left corner of the device, below the marking code.

## 6. Functional diagram

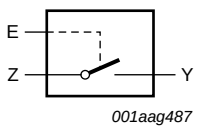


**Fig 1. Logic symbol**

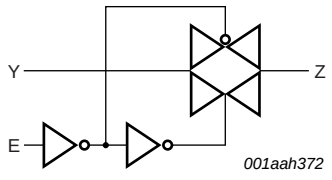


**Fig 2. Logic diagram**

# 7. Pinning information

## 7.1 Pinning

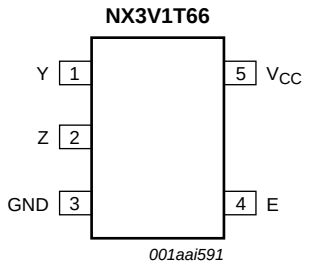


**Fig 3. Pin configuration SOT353-1 (TSSOP5)**

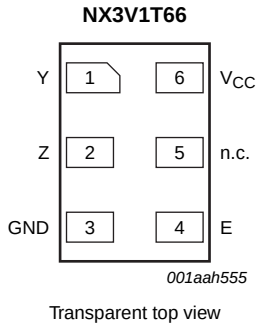


**Fig 4. Pin configuration SOT886 (XSON6)**

## 7.2 Pin description

**Table 3. Pin description**

| Symbol | Pin | | Description |
|---|---|---|---|
| | SOT353-1 | SOT886 | |
| Y | 1 | 1 | independent input or output |
| Z | 2 | 2 | independent output or input |
| GND | 3 | 3 | ground (0 V) |
| E | 4 | 4 | enable input (active HIGH) |
| n.c. | - | 5 | not connected |
| $V_{CC}$ | 5 | 6 | supply voltage |

# 8. Functional description

**Table 4. Function table[1]**

| Input E | Switch |
|---|---|
| L | OFF-state |
| H | ON-state |

[1] H = HIGH voltage level; L = LOW voltage level.

## 9. Limiting values

**Table 5. Limiting values**

*In accordance with the Absolute Maximum Rating System (IEC 60134). Voltages are referenced to GND (ground = 0 V).*

| Symbol | Parameter | Conditions | | Min | Max | Unit |
|---|---|---|---|---|---|---|
| $V_{CC}$ | supply voltage | | | –0.5 | +4.6 | V |
| $V_I$ | input voltage | enable input E | [1] | –0.5 | +4.6 | V |
| $V_{SW}$ | switch voltage | | [2] | –0.5 | $V_{CC}$ + 0.5 | V |
| $I_{IK}$ | input clamping current | $V_I$ < –0.5 V | | –50 | - | mA |
| $I_{SK}$ | switch clamping current | $V_I$ < –0.5 V or $V_I$ > $V_{CC}$ + 0.5 V | | - | ±50 | mA |
| $I_{SW}$ | switch current | $V_{SW}$ > –0.5 V or $V_{SW}$ < $V_{CC}$ + 0.5 V; source or sink current | | - | ±500 | mA |
| | | $V_{SW}$ > –0.5 V or $V_{SW}$ < $V_{CC}$ + 0.5 V; pulsed at 1 ms duration, < 10 % duty cycle; peak current | | - | ±750 | mA |
| $T_{stg}$ | storage temperature | | | –65 | +150 | °C |
| $P_{tot}$ | total power dissipation | $T_{amb}$ = –40 °C to +125 °C | [3] | - | 250 | mW |

[1] The minimum input voltage rating may be exceeded if the input current rating is observed.

[2] The minimum and maximum switch voltage ratings may be exceeded if the switch clamping current rating is observed but may not exceed 4.6 V.

[3] For TSSOP5 package: above 87.5 °C the value of $P_{tot}$ derates linearly with 4.0 mW/K.
For XSON6 package: above 118 °C the value of $P_{tot}$ derates linearly with 7.8 mW/K.

## 10. Recommended operating conditions

**Table 6. Recommended operating conditions**

| Symbol | Parameter | Conditions | | Min | Max | Unit |
|---|---|---|---|---|---|---|
| $V_{CC}$ | supply voltage | | | 1.4 | 4.3 | V |
| $V_I$ | input voltage | enable input E | | 0 | 4.3 | V |
| $V_{SW}$ | switch voltage | | [1] | 0 | $V_{CC}$ | V |
| $T_{amb}$ | ambient temperature | | | –40 | +125 | °C |
| $\Delta t/\Delta V$ | input transition rise and fall rate | $V_{CC}$ = 1.4 V to 4.3 V | [2] | - | 200 | ns/V |

[1] To avoid sinking GND current from of terminal Z when switch current flows in terminal Y, the voltage drop across the bidirectional switch must not exceed 0.4 V. If the switch current flows into terminal Z, no GND current will flow from terminal Y. In this case, there is no limit for the voltage drop across the switch.

[2] Applies to control signal levels.

## 11. Static characteristics

**Table 7. Static characteristics**

*At recommended operating conditions; voltages are referenced to GND (ground 0 V).*

| Symbol | Parameter | Conditions | $T_{amb}$ = 25 °C | | | $T_{amb}$ = –40 °C to +125 °C | | | Unit |
|---|---|---|---|---|---|---|---|---|---|
| | | | Min | Typ | Max | Min | Max (85 °C) | Max (125 °C) | |
| $V_{IH}$ | HIGH-level input voltage | $V_{CC}$ = 1.4 V to 1.6 V | 0.9 | - | - | 0.9 | - | - | V |
| | | $V_{CC}$ = 1.65 V to 1.95 V | 0.9 | - | - | 0.9 | - | - | V |
| | | $V_{CC}$ = 2.3 V to 2.7 V | 1.1 | - | - | 1.1 | - | - | V |
| | | $V_{CC}$ = 2.7 V to 3.6 V | 1.3 | - | - | 1.3 | - | - | V |
| | | $V_{CC}$ = 3.6 V to 4.3 V | 1.4 | - | - | 1.4 | - | - | V |
| $V_{IL}$ | LOW-level input voltage | $V_{CC}$ = 1.4 V to 1.6 V | - | - | 0.3 | - | 0.3 | 0.3 | V |
| | | $V_{CC}$ = 1.65 V to 1.95 V | - | - | 0.4 | - | 0.4 | 0.3 | V |
| | | $V_{CC}$ = 2.3 V to 2.7 V | - | - | 0.4 | - | 0.4 | 0.4 | V |
| | | $V_{CC}$ = 2.7 V to 3.6 V | - | - | 0.5 | - | 0.5 | 0.5 | V |
| | | $V_{CC}$ = 3.6 V to 4.3 V | - | - | 0.6 | - | 0.6 | 0.6 | V |
| $I_I$ | input leakage current | enable input E; $V_I$ = GND to 4.3 V; $V_{CC}$ = 1.4 V to 4.3 V | | | | | | | |
| $I_{S(OFF)}$ | OFF-state leakage current | Y port; see Figure 5 | | | | | | | |
| | | $V_{CC}$ = 1.4 V to 3.6 V | - | - | ±5 | - | ±50 | ±500 | nA |
| | | $V_{CC}$ = 3.6 V to 4.3 V | - | - | ±10 | - | ±50 | ±500 | nA |
| $I_{S(ON)}$ | ON-state leakage current | Z port; see Figure 6 | | | | | | | |
| | | $V_{CC}$ = 1.4 V to 3.6 V | - | - | ±5 | - | ±50 | ±500 | nA |
| | | $V_{CC}$ = 3.6 V to 4.3 V | - | - | ±10 | - | ±50 | ±500 | nA |
| $I_{CC}$ | supply current | $V_I$ = $V_{CC}$ or GND; $V_{CC}$ = 3.6 V; $V_{SW}$ = GND or $V_{CC}$; $I_O$ = 0 A | | | | | | | |
| | | $V_{CC}$ = 3.6 V | - | - | 100 | - | 690 | 6000 | nA |
| | | $V_{CC}$ = 4.3 V | - | - | 150 | - | 800 | 7000 | nA |
| $\Delta I_{CC}$ | additional supply current | $V_{SW}$ = GND or $V_{CC}$ | | | | | | | |
| | | $V_I$ = 2.6 V; $V_{CC}$ = 4.3 V | - | 2.0 | 4.0 | - | 7 | 7 | μA |
| | | $V_I$ = 2.6 V; $V_{CC}$ = 3.6 V | - | 0.35 | 0.7 | - | 1 | 1 | μA |
| | | $V_I$ = 1.8 V; $V_{CC}$ = 4.3 V | - | 7.0 | 10.0 | - | 15 | 15 | μA |
| | | $V_I$ = 1.8 V; $V_{CC}$ = 3.6 V | - | 2.5 | 4.0 | - | 5 | 5 | μA |
| | | $V_I$ = 1.8 V; $V_{CC}$ = 2.5 V | - | 50 | 200 | - | 300 | 500 | nA |
| $C_I$ | input capacitance | | - | 1.0 | - | - | - | - | pF |
| $C_{S(OFF)}$ | OFF-state capacitance | | - | 70 | - | - | - | - | pF |
| $C_{S(ON)}$ | ON-state capacitance | | - | 205 | - | - | - | - | pF |

## 11.1 Test circuits

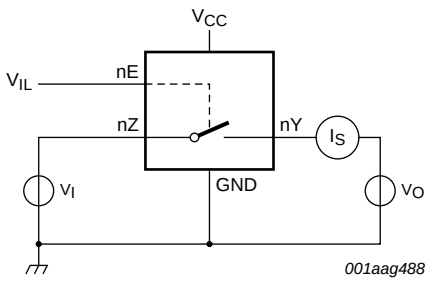


$V_I$ = 0.3 V or $V_{CC}$ – 0.3 V; $V_O$ = $V_{CC}$ – 0.3 V or 0.3 V.

**Fig 5. Test circuit for measuring OFF-state leakage current**

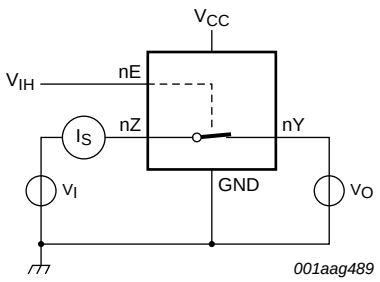


$V_I$ = 0.3 V or $V_{CC}$ – 0.3 V; $V_O$ = open circuit.

**Fig 6. Test circuit for measuring ON-state leakage current**

## 11.2 ON resistance

**Table 8. Resistance $R_{ON}$**

*At recommended operating conditions; voltages are referenced to GND (ground = 0 V); for graphs see Figure 8 to Figure 14.*

| Symbol | Parameter | Conditions | $T_{amb}$ = –40 °C to +85 °C | | | $T_{amb}$ = –40 °C to +125 °C | | Unit |
|---|---|---|---|---|---|---|---|---|
| | | | Min | Typ[1] | Max | Min | Max | |
| $R_{ON(peak)}$ | ON resistance (peak) | $V_I$ = GND to $V_{CC}$; $I_{SW}$ = 100 mA; see Figure 7 | | | | | | |
| | | $V_{CC}$ = 1.4 V | - | 0.8 | 1.9 | - | 2.1 | Ω |
| | | $V_{CC}$ = 1.65 V | - | 0.5 | 0.8 | - | 0.9 | Ω |
| | | $V_{CC}$ = 2.3 V | - | 0.3 | 0.5 | - | 0.6 | Ω |
| | | $V_{CC}$ = 2.7 V | - | 0.25 | 0.45 | - | 0.5 | Ω |
| | | $V_{CC}$ = 4.3 V | - | 0.25 | 0.45 | - | 0.5 | Ω |
| $R_{ON(flat)}$ | ON resistance (flatness) | $V_I$ = GND to $V_{CC}$; $I_{SW}$ = 100 mA [2] | | | | | | |
| | | $V_{CC}$ = 1.4 V | - | 0.5 | 1.7 | - | 1.8 | Ω |
| | | $V_{CC}$ = 1.65 V | - | 0.25 | 0.6 | - | 0.7 | Ω |
| | | $V_{CC}$ = 2.3 V | - | 0.1 | 0.2 | - | 0.2 | Ω |
| | | $V_{CC}$ = 2.7 V | - | 0.1 | 0.2 | - | 0.2 | Ω |
| | | $V_{CC}$ = 4.3 V | - | 0.1 | 0.25 | - | 0.25 | Ω |

[1] Typical values are measured at $T_{amb}$ = 25 °C.

[2] Flatness is defined as the difference between the maximum and minimum value of ON resistance measured at identical $V_{CC}$ and temperature.

## 11.3 ON resistance test circuit and graphs

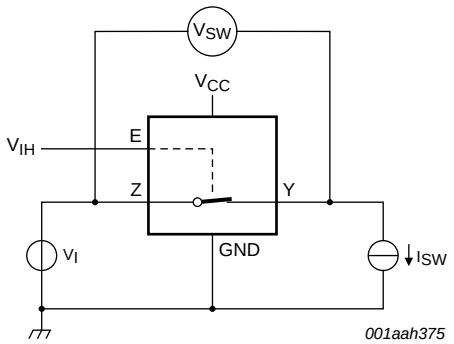


$R_{ON} = V_{SW} / I_{SW}$.

**Fig 7. Test circuit for measuring ON resistance**

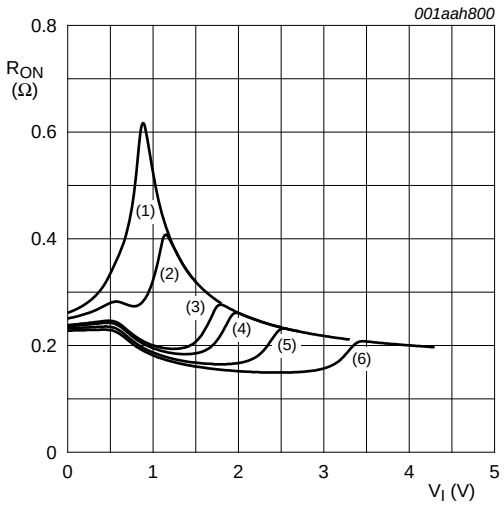


(1) $V_{CC}$ = 1.5 V.
(2) $V_{CC}$ = 1.8 V.
(3) $V_{CC}$ = 2.5 V.
(4) $V_{CC}$ = 2.7 V.
(5) $V_{CC}$ = 3.3 V.
(6) $V_{CC}$ = 4.3 V.
Measured at $T_{amb}$ = 25 °C.

**Fig 8. Typical ON resistance as a function of input voltage**

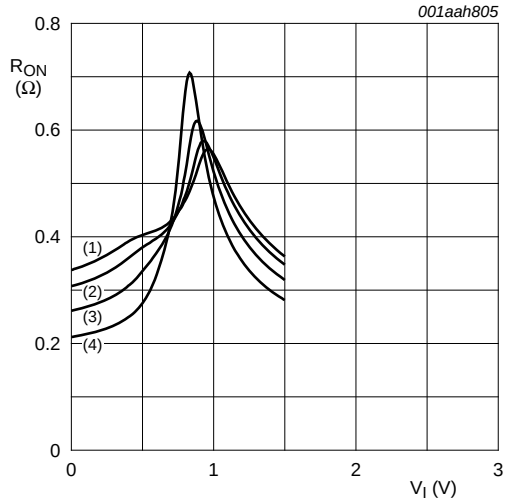


(1) $T_{amb}$ = 125 °C.

(2) $T_{amb}$ = 85 °C.

(3) $T_{amb}$ = 25 °C.

(4) $T_{amb}$ = –40 °C.

**Fig 9. ON resistance as a function of input voltage; $V_{CC}$ = 1.5 V**

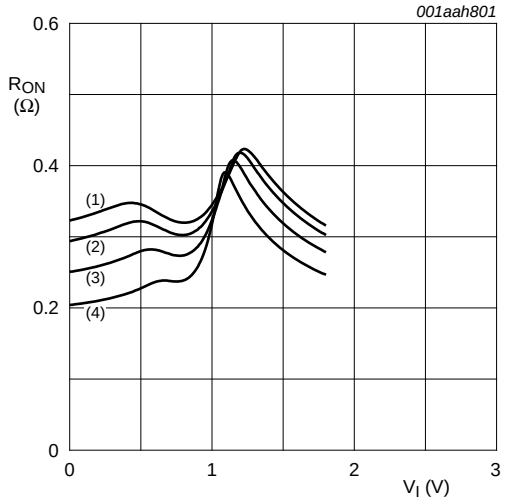


(1) $T_{amb}$ = 125 °C.

(2) $T_{amb}$ = 85 °C.

(3) $T_{amb}$ = 25 °C.

(4) $T_{amb}$ = –40 °C.

**Fig 10. ON resistance as a function of input voltage; $V_{CC}$ = 1.8 V**

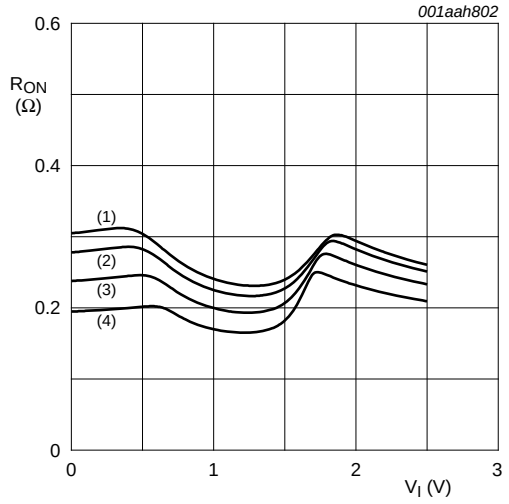


(1) $T_{amb}$ = 125 °C.

(2) $T_{amb}$ = 85 °C.

(3) $T_{amb}$ = 25 °C.

(4) $T_{amb}$ = –40 °C.

**Fig 11. ON resistance as a function of input voltage; $V_{CC}$ = 2.5 V**

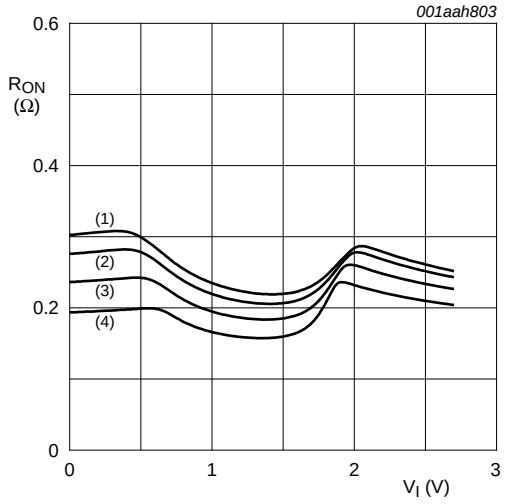


(1) $T_{amb}$ = 125 °C.

(2) $T_{amb}$ = 85 °C.

(3) $T_{amb}$ = 25 °C.

(4) $T_{amb}$ = –40 °C.

**Fig 12. ON resistance as a function of input voltage; $V_{CC}$ = 2.7 V**

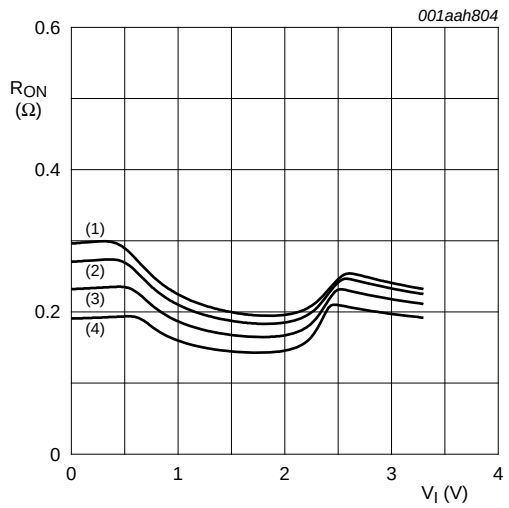


(1) $T_{amb}$ = 125 °C.
(2) $T_{amb}$ = 85 °C.
(3) $T_{amb}$ = 25 °C.
(4) $T_{amb}$ = –40 °C.

**Fig 13. ON resistance as a function of input voltage; $V_{CC}$ = 3.3 V**

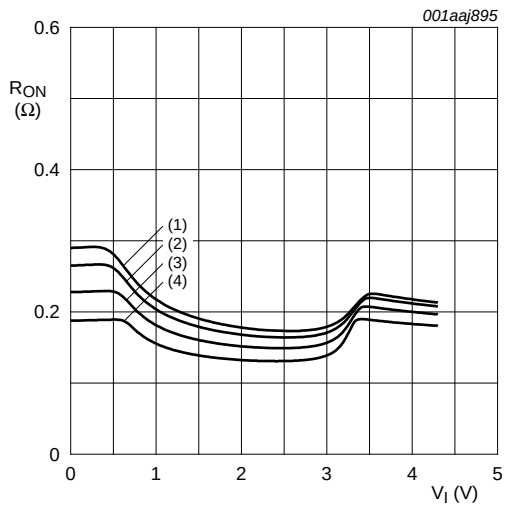


(1) $T_{amb}$ = 125 °C.
(2) $T_{amb}$ = 85 °C.
(3) $T_{amb}$ = 25 °C.
(4) $T_{amb}$ = –40 °C.

**Fig 14. ON resistance as a function of input voltage; $V_{CC}$ = 4.3 V**

## 12. Dynamic characteristics

**Table 9. Dynamic characteristics**

*At recommended operating conditions; voltages are referenced to GND (ground = 0 V); for test circuit Figure 16.*

| Symbol | Parameter | Conditions | $T_{amb}$ = 25 °C | | | $T_{amb}$ = –40 °C to +125 °C | | | Unit |
|---|---|---|---|---|---|---|---|---|---|
| | | | Min | Typ[1] | Max | Min | Max (85 °C) | Max (125 °C) | |
| $t_{en}$ | enable time | E to Y; see Figure 15 | | | | | | | |
| | | $V_{CC}$ = 1.4 V to 1.6 V | - | 35 | 49 | - | 53 | 57 | ns |
| | | $V_{CC}$ = 1.65 V to 1.95 V | - | 28 | 40 | - | 43 | 48 | ns |
| | | $V_{CC}$ = 2.3 V to 2.7 V | - | 20 | 30 | - | 32 | 35 | ns |
| | | $V_{CC}$ = 2.7 V to 3.6 V | - | 18 | 28 | - | 30 | 32 | ns |
| | | $V_{CC}$ = 3.6 V to 4.3 V | - | 18 | 28 | - | 30 | 32 | ns |
| $t_{dis}$ | disable time | E to Y; see Figure 15 | | | | | | | |
| | | $V_{CC}$ = 1.4 V to 1.6 V | - | 32 | 70 | - | 80 | 90 | ns |
| | | $V_{CC}$ = 1.65 V to 1.95 V | - | 23 | 55 | - | 60 | 65 | ns |
| | | $V_{CC}$ = 2.3 V to 2.7 V | - | 14 | 25 | - | 30 | 35 | ns |
| | | $V_{CC}$ = 2.7 V to 3.6 V | - | 11 | 20 | - | 25 | 30 | ns |
| | | $V_{CC}$ = 3.6 V to 4.3 V | - | 11 | 20 | - | 25 | 30 | ns |

[1] Typical values are measured at $T_{amb}$ = 25 °C and $V_{CC}$ = 1.5 V, 1.8 V, 2.5 V, 3.3 V and 4.3 V respectively.

## 12.1 Waveform and test circuits

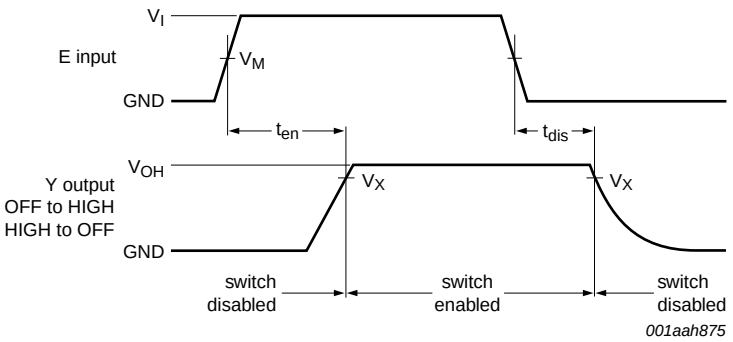


Measurement points are given in Table 10.

Logic level: $V_{OH}$ is the typical output voltage that occurs with the output load.

**Fig 15. Enable and disable times**

**Table 10. Measurement points**

| Supply voltage | Input | Output |
|---|---|---|
| $V_{CC}$ | $V_M$ | $V_X$ |
| 1.4 V to 4.3 V | $0.5V_{CC}$ | $0.9V_{OH}$ |

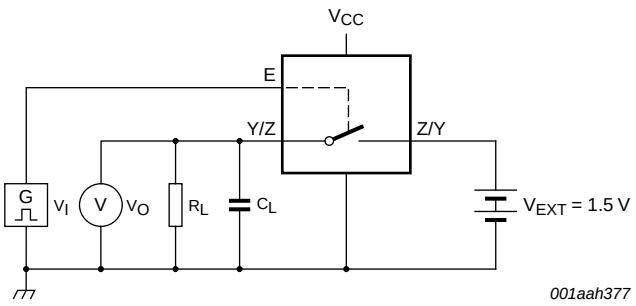


Test data is given in Table 11.

Definitions test circuit:

$R_L$ = Load resistance.

$C_L$ = Load capacitance including jig and probe capacitance.

$V_{EXT}$ = External voltage for measuring switching times.

**Fig 16. Load circuit for switching times**

**Table 11. Test data**

| Supply voltage | Input | | Load | |
|---|---|---|---|---|
| $V_{CC}$ | $V_I$ | $t_r$, $t_f$ | $C_L$ | $R_L$ |
| 1.4 V to 4.3 V | $V_{CC}$ | ≤ 2.5 ns | 35 pF | 50 Ω |

## 12.2 Additional dynamic characteristics

**Table 12. Additional dynamic characteristics**

*At recommended operating conditions; voltages are referenced to GND (ground = 0 V); $V_I$ = GND or $V_{CC}$ (unless otherwise specified); $t_r = t_f \leq 2.5$ ns; $T_{amb}$ = 25 °C.*

| Symbol | Parameter | Conditions | | Min | Typ | Max | Unit |
|---|---|---|---|---|---|---|---|
| THD | total harmonic distortion | $f_i$ = 20 Hz to 20 kHz; $R_L$ = 32 Ω; see Figure 17 | [1] | | | | |
| | | $V_{CC}$ = 1.4 V; $V_I$ = 1 V (p-p) | | - | 0.05 | - | % |
| | | $V_{CC}$ = 1.65 V; $V_I$ = 1.2 V (p-p) | | - | 0.03 | - | % |
| | | $V_{CC}$ = 2.3 V; $V_I$ = 1.5 V (p-p) | | - | 0.01 | - | % |
| | | $V_{CC}$ = 2.7 V; $V_I$ = 2 V (p-p) | | - | 0.01 | - | % |
| | | $V_{CC}$ = 4.3 V; $V_I$ = 2 V (p-p) | | - | 0.01 | - | % |
| $f_{(-3dB)}$ | –3 dB frequency response | $R_L$ = 50 Ω; see Figure 18 | [1] | | | | |
| | | $V_{CC}$ = 1.4 V to 4.3 V | | - | 25 | - | MHz |
| $\alpha_{iso}$ | isolation (OFF-state) | $f_i$ = 100 kHz; $R_L$ = 50 Ω; see Figure 19 | [1] | | | | |
| | | $V_{CC}$ = 1.4 V to 4.3 V | | - | –90 | - | dB |
| $V_{ct}$ | crosstalk voltage | between digital inputs and switch; $f_i$ = 1 MHz; $C_L$ = 50 pF; $R_L$ = 50 Ω; see Figure 20 | | | | | |
| | | $V_{CC}$ = 1.4 V to 3.6 V | | - | 0.3 | - | V |
| | | $V_{CC}$ = 3.6 V to 4.3 V | | - | 0.5 | - | V |
| $Q_{inj}$ | charge injection | $f_i$ = 1 MHz; $C_L$ = 0.1 nF; $R_L$ = 1 MΩ; $V_{gen}$ = 0 V; $R_{gen}$ = 0 Ω; see Figure 21 | | | | | |
| | | $V_{CC}$ = 1.5 V | | - | 6.5 | - | pC |
| | | $V_{CC}$ = 1.8 V | | - | 6.5 | - | pC |
| | | $V_{CC}$ = 2.5 V | | - | 6.5 | - | pC |
| | | $V_{CC}$ = 3.3 V | | - | 6.5 | - | pC |
| | | $V_{CC}$ = 4.3 V | | - | 12 | - | pC |

[1] $f_i$ is biased at $0.5V_{CC}$.

## 12.3 Test circuits

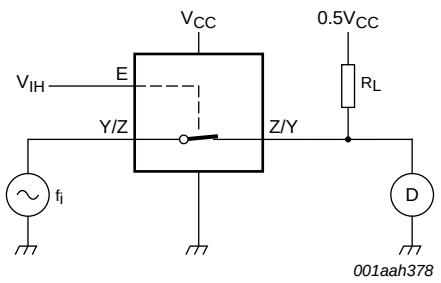


**Fig 17. Test circuit for measuring total harmonic distortion**

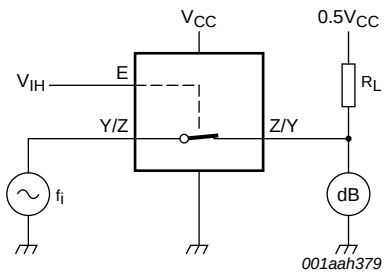


Adjust $f_i$ voltage to obtain 0 dBm level at output. Increase $f_i$ frequency until dB meter reads –3 dB.

**Fig 18. Test circuit for measuring the frequency response when channel is in ON-state**

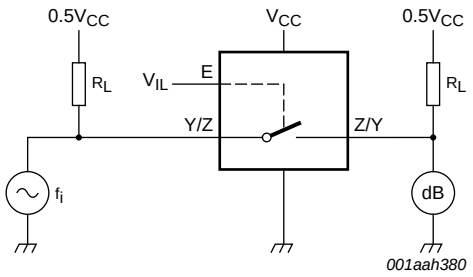


Adjust $f_i$ voltage to obtain 0 dBm level at input.

**Fig 19. Test circuit for measuring isolation (OFF-state)**

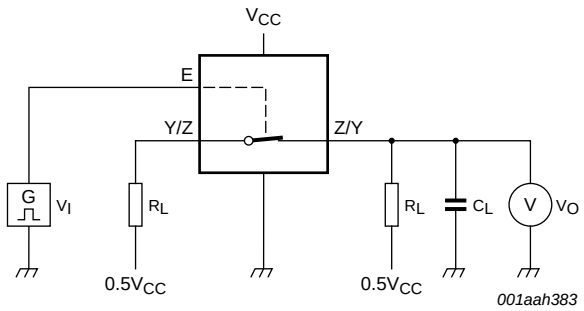


a. Test circuit

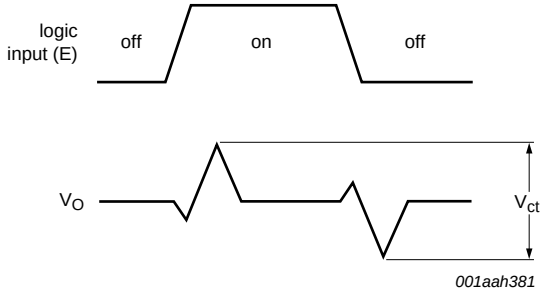


b. Input and output pulse definitions

**Fig 20. Test circuit for measuring crosstalk voltage between digital inputs and switch**

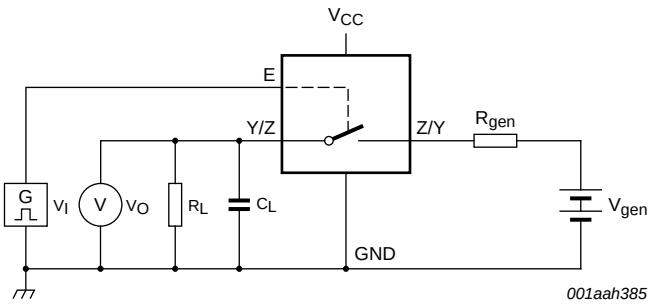


a. Test circuit

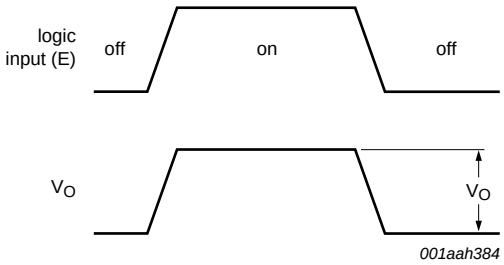


b. Input and output pulse definitions

Definition: $Q_{inj} = \Delta V_O \times C_L$.

$\Delta V_O$ = output voltage variation.

$R_{gen}$ = generator resistance.

$V_{gen}$ = generator voltage.

**Fig 21. Test circuit for measuring charge injection**

## 13. Package outline

**TSSOP5: plastic thin shrink small outline package; 5 leads; body width 1.25 mm** **SOT353-1**

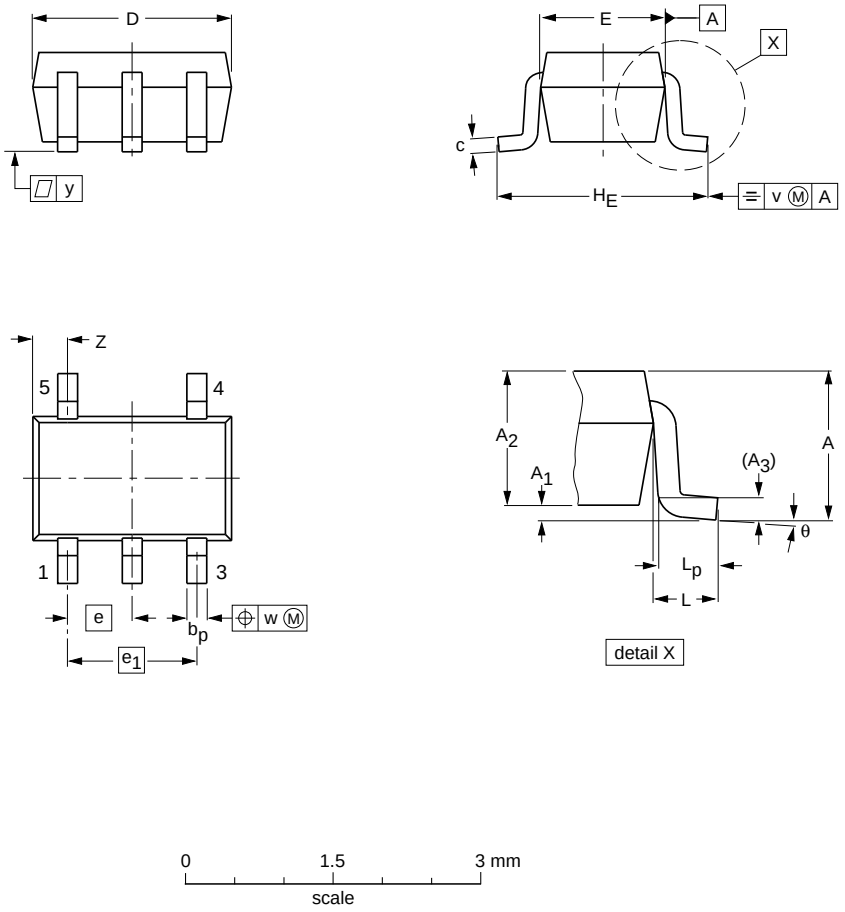


**DIMENSIONS (mm are the original dimensions)**

| UNIT | A max. | $A_1$ | $A_2$ | $A_3$ | $b_p$ | c | D(1) | E(1) | e | $e_1$ | $H_E$ | L | $L_p$ | v | w | y | Z(1) | θ |
|---|---|---|---|---|---|---|---|---|---|---|---|---|---|---|---|---|---|---|
| mm | 1.1 | 0.1<br>0 | 1.0<br>0.8 | 0.15 | 0.30<br>0.15 | 0.25<br>0.08 | 2.25<br>1.85 | 1.35<br>1.15 | 0.65 | 1.3 | 2.25<br>2.0 | 0.425 | 0.46<br>0.21 | 0.3 | 0.1 | 0.1 | 0.60<br>0.15 | 7°<br>0° |

**Note**

1. Plastic or metal protrusions of 0.15 mm maximum per side are not included.

| OUTLINE VERSION | REFERENCES | | | | EUROPEAN PROJECTION | ISSUE DATE |
|---|---|---|---|---|---|---|
| | IEC | JEDEC | JEITA | | | |
| SOT353-1 | | MO-203 | SC-88A | | | ~~00-09-01~~<br>03-02-19 |

**Fig 22. Package outline SOT353-1 (TSSOP5)**

**XSON6: plastic extremely thin small outline package; no leads; 6 terminals; body 1 x 1.45 x 0.5 mm** **SOT886**

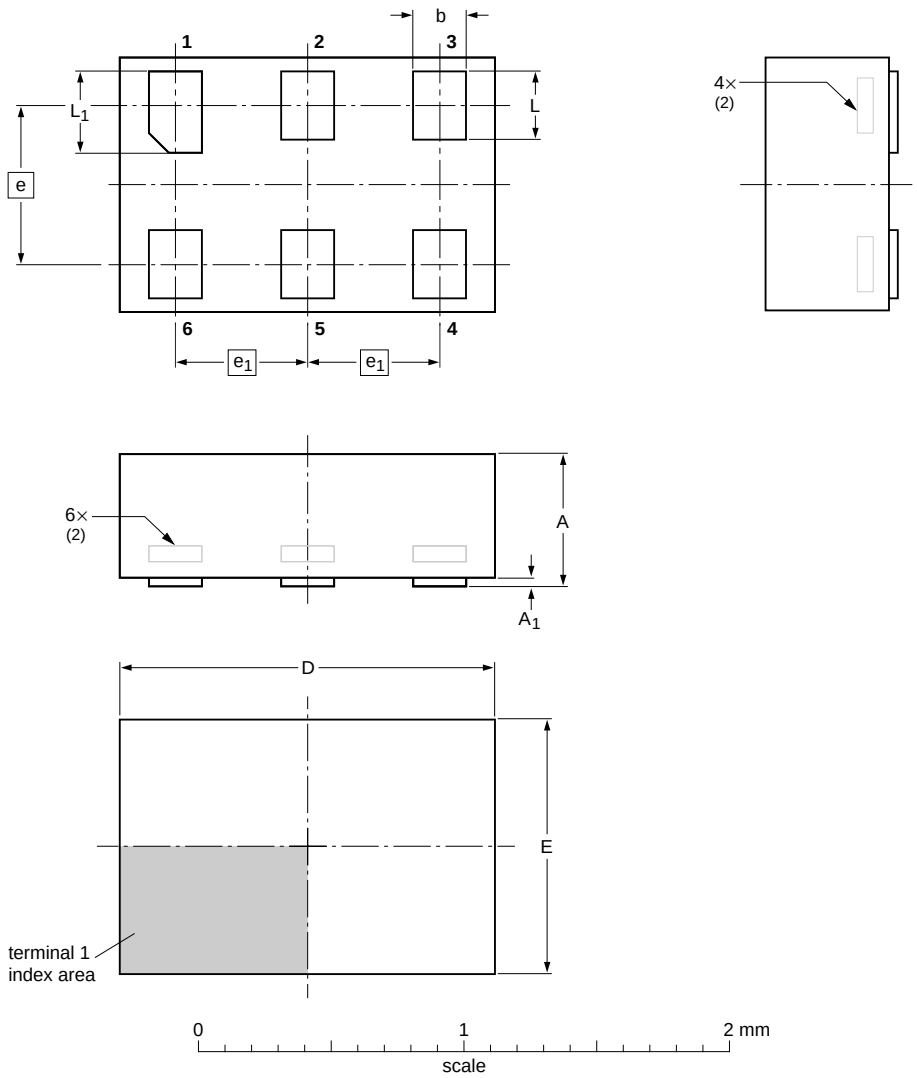


**DIMENSIONS (mm are the original dimensions)**

| UNIT | A(1) max | $A_1$ max | b | D | E | e | $e_1$ | L | $L_1$ |
|---|---|---|---|---|---|---|---|---|---|
| mm | 0.5 | 0.04 | 0.25<br>0.17 | 1.5<br>1.4 | 1.05<br>0.95 | 0.6 | 0.5 | 0.35<br>0.27 | 0.40<br>0.32 |

**Notes**

1. Including plating thickness.
2. Can be visible in some manufacturing processes.

| OUTLINE VERSION | REFERENCES | | | | EUROPEAN PROJECTION | ISSUE DATE |
|---|---|---|---|---|---|---|
| | IEC | JEDEC | JEITA | | | |
| SOT886 | | MO-252 | | | | ~~04-07-15~~<br>04-07-22 |

**Fig 23. Package outline SOT886 (XSON6)**

## 14. Abbreviations

**Table 13. Abbreviations**

| Acronym | Description |
|---|---|
| CDM | Charged Device Model |
| CMOS | Complementary Metal Oxide Semiconductor |
| ESD | ElectroStatic Discharge |
| HBM | Human Body Model |
| MM | Machine Model |
| PDA | Personal Digital Assistant |

## 15. Revision history

**Table 14. Revision history**

| Document ID | Release date | Data sheet status | Change notice | Supersedes |
|---|---|---|---|---|
| NX3V1T66 v.7 | 20111102 | Product data sheet | - | NX3V1T66 v.6 |
| Modifications: | • Legal pages updated | | | |
| NX3V1T66 v.6 | 20101221 | Product data sheet | - | NX3V1T66 v.5 |
| NX3V1T66 v.5 | 20100324 | Product data sheet | - | NX3V1T66 v.4 |
| NX3V1T66 v.4 | 20100202 | Product data sheet | - | NX3V1T66 v.3 |
| NX3V1T66 v.3 | 20090504 | Product data sheet | - | NX3V1T66 v.2 |
| NX3V1T66 v.2 | 20080724 | Product data sheet | - | NX3V1T66 v.1 |
| NX3V1T66 v.1 | 20080327 | Product data sheet | - | - |

# 16. Legal information

## 16.1 Data sheet status

| Document status[1][2] | Product status[3] | Definition |
|---|---|---|
| Objective [short] data sheet | Development | This document contains data from the objective specification for product development. |
| Preliminary [short] data sheet | Qualification | This document contains data from the preliminary specification. |
| Product [short] data sheet | Production | This document contains the product specification. |

[1] Please consult the most recently issued document before initiating or completing a design.

[2] The term 'short data sheet' is explained in section "Definitions".

[3] The product status of device(s) described in this document may have changed since this document was published and may differ in case of multiple devices. The latest product status information is available on the Internet at URL http://www.nxp.com.

## 16.2 Definitions

**Draft —** The document is a draft version only. The content is still under internal review and subject to formal approval, which may result in modifications or additions. NXP Semiconductors does not give any representations or warranties as to the accuracy or completeness of information included herein and shall have no liability for the consequences of use of such information.

**Short data sheet —** A short data sheet is an extract from a full data sheet with the same product type number(s) and title. A short data sheet is intended for quick reference only and should not be relied upon to contain detailed and full information. For detailed and full information see the relevant full data sheet, which is available on request via the local NXP Semiconductors sales office. In case of any inconsistency or conflict with the short data sheet, the full data sheet shall prevail.

**Product specification —** The information and data provided in a Product data sheet shall define the specification of the product as agreed between NXP Semiconductors and its customer, unless NXP Semiconductors and customer have explicitly agreed otherwise in writing. In no event however, shall an agreement be valid in which the NXP Semiconductors product is deemed to offer functions and qualities beyond those described in the Product data sheet.

## 16.3 Disclaimers

**Limited warranty and liability —** Information in this document is believed to be accurate and reliable. However, NXP Semiconductors does not give any representations or warranties, expressed or implied, as to the accuracy or completeness of such information and shall have no liability for the consequences of use of such information.

In no event shall NXP Semiconductors be liable for any indirect, incidental, punitive, special or consequential damages (including - without limitation - lost profits, lost savings, business interruption, costs related to the removal or replacement of any products or rework charges) whether or not such damages are based on tort (including negligence), warranty, breach of contract or any other legal theory.

Notwithstanding any damages that customer might incur for any reason whatsoever, NXP Semiconductors' aggregate and cumulative liability towards customer for the products described herein shall be limited in accordance with the *Terms and conditions of commercial sale* of NXP Semiconductors.

**Right to make changes —** NXP Semiconductors reserves the right to make changes to information published in this document, including without limitation specifications and product descriptions, at any time and without notice. This document supersedes and replaces all information supplied prior to the publication hereof.

**Suitability for use —** NXP Semiconductors products are not designed, authorized or warranted to be suitable for use in life support, life-critical or safety-critical systems or equipment, nor in applications where failure or malfunction of an NXP Semiconductors product can reasonably be expected to result in personal injury, death or severe property or environmental damage. NXP Semiconductors accepts no liability for inclusion and/or use of NXP Semiconductors products in such equipment or applications and therefore such inclusion and/or use is at the customer's own risk.

**Applications —** Applications that are described herein for any of these products are for illustrative purposes only. NXP Semiconductors makes no representation or warranty that such applications will be suitable for the specified use without further testing or modification.

Customers are responsible for the design and operation of their applications and products using NXP Semiconductors products, and NXP Semiconductors accepts no liability for any assistance with applications or customer product design. It is customer's sole responsibility to determine whether the NXP Semiconductors product is suitable and fit for the customer's applications and products planned, as well as for the planned application and use of customer's third party customer(s). Customers should provide appropriate design and operating safeguards to minimize the risks associated with their applications and products.

NXP Semiconductors does not accept any liability related to any default, damage, costs or problem which is based on any weakness or default in the customer's applications or products, or the application or use by customer's third party customer(s). Customer is responsible for doing all necessary testing for the customer's applications and products using NXP Semiconductors products in order to avoid a default of the applications and the products or of the application or use by customer's third party customer(s). NXP does not accept any liability in this respect.

**Limiting values —** Stress above one or more limiting values (as defined in the Absolute Maximum Ratings System of IEC 60134) will cause permanent damage to the device. Limiting values are stress ratings only and (proper) operation of the device at these or any other conditions above those given in the Recommended operating conditions section (if present) or the Characteristics sections of this document is not warranted. Constant or repeated exposure to limiting values will permanently and irreversibly affect the quality and reliability of the device.

**Terms and conditions of commercial sale —** NXP Semiconductors products are sold subject to the general terms and conditions of commercial sale, as published at http://www.nxp.com/profile/terms, unless otherwise agreed in a valid written individual agreement. In case an individual agreement is concluded only the terms and conditions of the respective agreement shall apply. NXP Semiconductors hereby expressly objects to applying the customer's general terms and conditions with regard to the purchase of NXP Semiconductors products by customer.

**No offer to sell or license —** Nothing in this document may be interpreted or construed as an offer to sell products that is open for acceptance or the grant, conveyance or implication of any license under any copyrights, patents or other industrial or intellectual property rights.

**Export control —** This document as well as the item(s) described herein may be subject to export control regulations. Export might require a prior authorization from competent authorities.

**Non-automotive qualified products —** Unless this data sheet expressly states that this specific NXP Semiconductors product is automotive qualified, the product is not suitable for automotive use. It is neither qualified nor tested in accordance with automotive testing or application requirements. NXP Semiconductors accepts no liability for inclusion and/or use of non-automotive qualified products in automotive equipment or applications.

In the event that customer uses the product for design-in and use in automotive applications to automotive specifications and standards, customer (a) shall use the product without NXP Semiconductors' warranty of the product for such automotive applications, use and specifications, and (b) whenever customer uses the product for automotive applications beyond NXP Semiconductors' specifications such use shall be solely at customer's own risk, and (c) customer fully indemnifies NXP Semiconductors for any liability, damages or failed product claims resulting from customer design and use of the product for automotive applications beyond NXP Semiconductors' standard warranty and NXP Semiconductors' product specifications.

### 16.4 Trademarks

Notice: All referenced brands, product names, service names and trademarks are the property of their respective owners.

## 17. Contact information

For more information, please visit: **http://www.nxp.com**

For sales office addresses, please send an email to: **salesaddresses@nxp.com**

## 18. Contents

**1 General description . . . . . 1**
**2 Features and benefits . . . . . 1**
**3 Applications . . . . . 2**
**4 Ordering information . . . . . 2**
**5 Marking . . . . . 2**
**6 Functional diagram . . . . . 2**
**7 Pinning information . . . . . 3**
7.1 Pinning . . . . . 3
7.2 Pin description . . . . . 3
**8 Functional description . . . . . 3**
**9 Limiting values . . . . . 4**
**10 Recommended operating conditions . . . . . 4**
**11 Static characteristics . . . . . 5**
11.1 Test circuits . . . . . 6
11.2 ON resistance . . . . . 6
11.3 ON resistance test circuit and graphs . . . . . 7
**12 Dynamic characteristics . . . . . 9**
12.1 Waveform and test circuits . . . . . 10
12.2 Additional dynamic characteristics . . . . . 11
12.3 Test circuits . . . . . 11
**13 Package outline . . . . . 15**
**14 Abbreviations . . . . . 17**
**15 Revision history . . . . . 17**
**16 Legal information . . . . . 18**
16.1 Data sheet status . . . . . 18
16.2 Definitions . . . . . 18
16.3 Disclaimers . . . . . 18
16.4 Trademarks . . . . . 19
**17 Contact information . . . . . 19**
**18 Contents . . . . . 20**



For more information, please visit: http://www.nxp.com
For sales office addresses, please send an email to: salesaddresses@nxp.com

Date of release: 2 November 2011
Document identifier: NX3V1T66