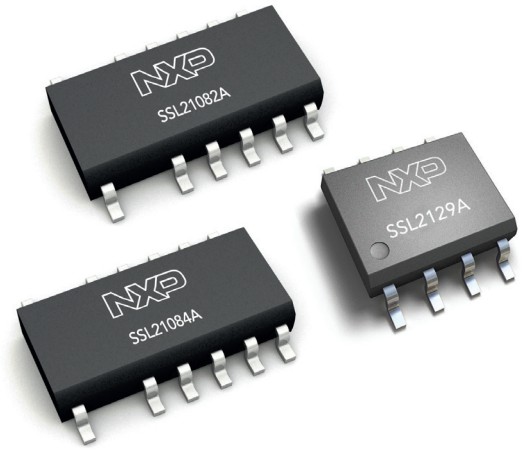

NXP mains-dimmable drivers and controller for LED lighting SSL21082(A)/84(A) & SSL2129A

Design LED lights with best-in-class dimmer compatibility per watt

These best-in-class mains-dimmable SSL GreenChip ICs, suitable for use in isolated and non-isolated compact LED driver topologies, deliver excellent efficiency and reduce system cost.

Key features

- Superb mains-dimmable LED driver solution (both leading and trailing edge phase cut dimmers)
- Buck driver ICs
  - Integrated 300 V MOSFET (SSL21082, SSL21082A)
  - Integrated 600 V MOSFET (SSL21084, SSL21084A)
- Flyback or buck controller IC
  - Controller-only with external MOSFET (SSL2129A)
  - Supports tapped-buck topologies to extend the V_f LED range
- Highest efficiency due to:
  - Power-efficient boundary conduction mode
  - Start-up JFET
- High power factor (>0.9)
- Full range of internal protections
- Compatible with wall switches with built-in indication light during standby
- "A" versions without short winding protection

Key benefits

- Benchmark dimmer compatibility per watt
- Compact, single-stage LED driver solution lowers eBOM cost
- Optimized, high-efficiency operation improves total lumen output per watt, lowering energy consumption further

Applications

- Dimmable retrofit LED lamps
- Dimmable driver modules for LED lighting

The NXP SSL2129A is a high-efficiency controller IC for superior dimmable LED lighting solutions that typically operates in the lamp power range of 4 to 25 W.

The straightforward design produces a cost-effective yet compact application, suitable for use with GU10 and PAR16 formats. A low-cost bipolar bleeder circuit supports a best-in-class dimmer compatibility performance for mainstream, single-stage LED driver applications.

The SSL2129A can be configured in either buck (non-isolated) or flyback (isolated) topologies at mains supply voltages of 100 to 120 V or 230 V.

As part of the same dimmable product family, NXP also offers driver ICs with an integrated MOSFET. The SSL21082(A), with a 300 V MOSFET, is designed for applications in the 100 to 120 V range, while the SSL21084(A), with a 600 V MOSFET, is for use with 230 V mains supply voltages. Both ICs support dimmable

LED lamp powers up to 15 W, while easing the design-in process.

When comparing the performance of dimmable LED driver solutions operating at the same lamp power levels, dimmer compatibility per watt is a more meaningful parameter than dimmer compatibility alone.

NXP determines lamp performance from the end-user perspective by using a combination of these criteria, resulting in a power merit factor that is based on two aspects. The first aspect is stability, which refers to how well the lamp avoids visual disturbances like flicker, shimmer and flashing.

The second aspect is controllability, which refers to how precisely the user can control and reduce the lamp's light output. LED driver applications based on NXP's dimmable SSL driver ICs show a great dimmer compatibility per watt at a very high power merit factor. Dimmer compatibility per watt not only depends on IC features, but also on the system implementation. NXP's application expertise, know-how and customer support are of crucial importance in designing a mains dimmable LED driver solution.

The long life time of LED lamp solutions, in combination with the impressive energy savings, result in significant reduction of energy usage (supporting a green environment at very low energy cost) and low maintenance cost.

Type number	Nominal mains	Lamp power	MOSFET	Package
SSL2129A	100 to 230 V	4 to 25 W	External	SO8
SSL21082(A)	100 to 120 V	Up to 15 W	300 V / 2 Ω	SO12
SSL21084(A)	230 V	Up to 15 W	600 V / 5 Ω	SO12

SSL2129AT 230 V / 5.5 W dimmable buck reference design

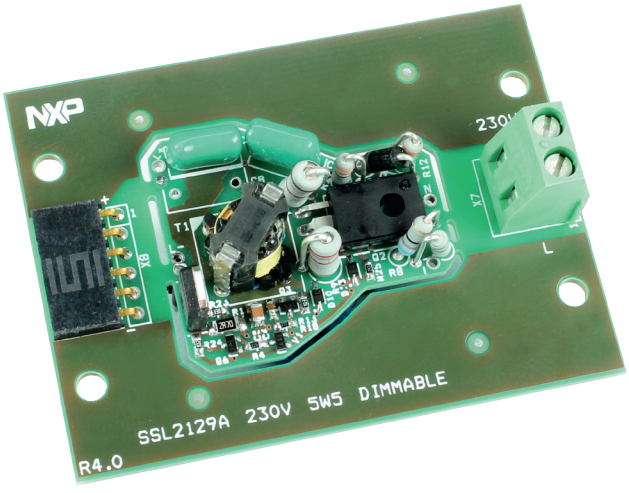

SSL2129AT block diagram

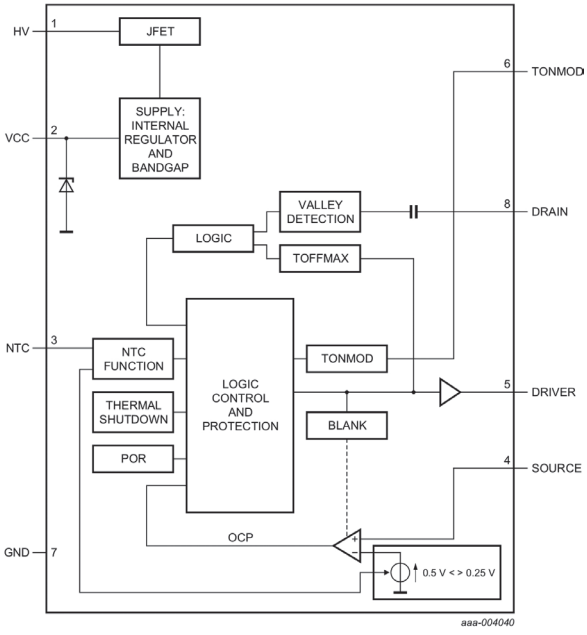

www.nxp.com

© 2012 NXP Semiconductors N.V.

All rights reserved. Reproduction in whole or in part is prohibited without the prior written consent of the copyright owner. The information presented in this document does not form part of any quotation or contract, is believed to be accurate and reliable and may be changed without notice. No liability will be accepted by the publisher for any consequence of its use. Publication thereof does not convey nor imply any license under patent- or other industrial or intellectual property rights.

Date of release: September 2012
Document order number: 9397 750 17337
Printed in the Netherlands