74AHC1G79-Q100; 74AHCT1G79-Q100

Single D-type flip-flop; positive-edge trigger

Rev. 1 — 16 May 2013 Product data sheet

1. General description

74AHC1G79-Q100 and 74AHCT1G79-Q100 are high-speed Si-gate CMOS devices. They provide a single positive-edge triggered D-type flip-flop.

Information on the data input is transferred to the Q output on the LOW-to-HIGH transition of the clock pulse. The D input must be stable one set-up time prior to the LOW-to-HIGH clock transition for predictable operation.

The AHC device has CMOS input switching levels and supply voltage range 2 V to 5.5 V.

The AHCT device has TTL input switching levels and supply voltage range 4.5 V to 5.5 V.

This product has been qualified to the Automotive Electronics Council (AEC) standard Q100 (Grade 1) and is suitable for use in automotive applications.

2. Features and benefits

- Automotive product qualification in accordance with AEC-Q100 (Grade 1)
  - Specified from –40 °C to +85 °C and from –40 °C to +125 °C
- Symmetrical output impedance
- High noise immunity
- Low power dissipation
- Balanced propagation delays
- SOT353-1 and SOT753 package options
- ESD protection:
  - MIL-STD-883, method 3015 exceeds 2000 V
  - HBM JESD22-A114F exceeds 2000 V
  - MM JESD22-A115-A exceeds 200 V (C = 200 pf, R = 0 Ω)

3. Ordering information

Table 1. Ordering information

Type number	Package			
	Temperature range	Name	Description	Version
74AHC1G79GW-Q100	−40 °C to +125 °C	TSSOP5	plastic thin shrink small outline package; 5 leads; body width 1.25 mm	SOT353-1
74AHCT1G79GW-Q100				
74AHC1G79GV-Q100	−40 °C to +125 °C	SC-74A	plastic surface-mounted package; 5 leads	SOT753
74AHCT1G79GV-Q100				

4. Marking

Table 2. Marking codes

Type number	Marking
74AHC1G79GW-Q100	AP
74AHCT1G79GW-Q100	A79
74AHC1G79GV-Q100	CP
74AHCT1G79GV-Q100	C79

5. Functional diagram

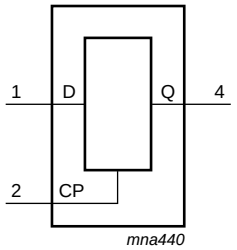

Fig 1. Logic symbol

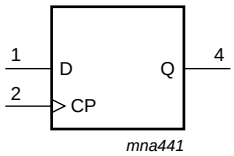

Fig 2. IEC logic symbol

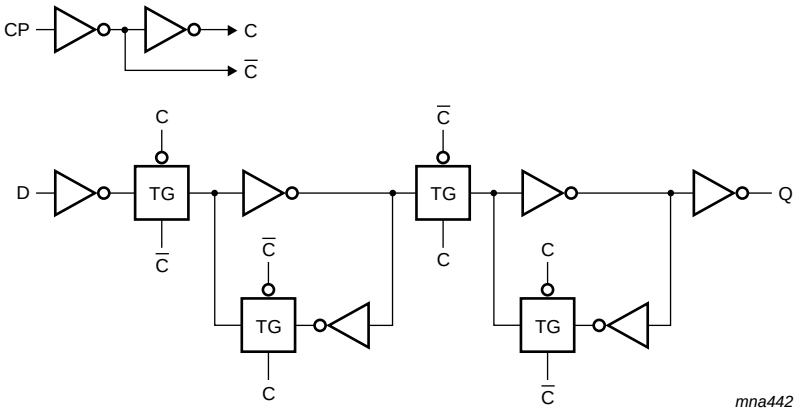

Fig 3. Logic diagram

6. Pinning information

6.1 Pinning

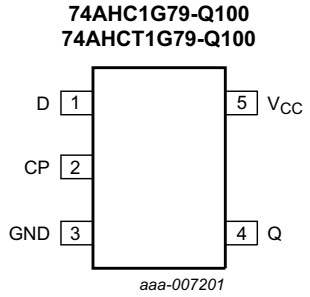

Fig 4. Pin configuration

6.2 Pin description

Table 3. Pin description

Symbol	Pin	Description
D	1	data input
CP	2	clock pulse input
GND	3	ground (0 V)
Q	4	data output
V_{CC}	5	supply voltage

7. Functional description

Table 4. Function table[1]

Inputs		Output
CP	**D**	**Q + 1**
↑	L	L
↑	H	H
L	X	Q

[1] H = HIGH voltage level;
L = LOW voltage level;
↑ = LOW-to-HIGH CP transition;
X = don't care;
Q + 1 = state after the next LOW-to-HIGH CP transition.

8. Limiting values

Table 5. Limiting values
In accordance with the Absolute Maximum Rating System (IEC 60134). Voltages are referenced to GND (ground = 0 V).

Symbol	Parameter	Conditions		Min	Max	Unit
V_{CC}	supply voltage			–0.5	+7.0	V
V_I	input voltage			–0.5	+7.0	V
I_{IK}	input clamping current	$V_I < -0.5$ V		–20	-	mA
I_{OK}	output clamping current	$V_O < -0.5$ V or $V_O > V_{CC} + 0.5$ V	[1]	-	±20	mA
I_O	output current	-0.5 V $< V_O < V_{CC} + 0.5$ V		-	±25	mA
I_{CC}	supply current			-	75	mA
I_{GND}	ground current			–75	-	mA
T_{stg}	storage temperature			–65	+150	°C
P_{tot}	total power dissipation	T_{amb} = –40 °C to +125 °C	[2]	-	250	mW

[1] The input and output voltage ratings may be exceeded if the input and output current ratings are observed.

[2] For both TSSOP5 and SC-74A packages: above 87.5 °C the value of P_{tot} derates linearly with 4.0 mW/K.

9. Recommended operating conditions

Table 6. Recommended operating conditions
Voltages are referenced to GND (ground = 0 V).

Symbol	Parameter	Conditions	74AHC1G79-Q100			74AHCT1G79-Q100			Unit
			Min	Typ	Max	Min	Typ	Max	
V_{CC}	supply voltage		2.0	5.0	5.5	4.5	5.0	5.5	V
V_I	input voltage		0	-	5.5	0	-	5.5	V
V_O	output voltage		0	-	V_{CC}	0	-	V_{CC}	V
T_{amb}	ambient temperature		–40	+25	+125	–40	+25	+125	°C
$\Delta t/\Delta V$	input transition rise and fall rate	V_{CC} = 3.3 V ± 0.3 V	-	-	100	-	-	-	ns/V
		V_{CC} = 5.0 V ± 0.5 V	-	-	20	-	-	20	ns/V

10. Static characteristics

Table 7. Static characteristics
Voltages are referenced to GND (ground = 0 V).

Symbol	Parameter	Conditions	25 °C			–40 °C to +85 °C		–40 °C to +125 °C		Unit
			Min	Typ	Max	Min	Max	Min	Max	
For type 74AHC1G79-Q100										
V_{IH}	HIGH-level input voltage	V_{CC} = 2.0 V	1.5	-	-	1.5	-	1.5	-	V
		V_{CC} = 3.0 V	2.1	-	-	2.1	-	2.1	-	V
		V_{CC} = 5.5 V	3.85	-	-	3.85	-	3.85	-	V
V_{IL}	LOW-level input voltage	V_{CC} = 2.0 V	-	-	0.5	-	0.5	-	0.5	V
		V_{CC} = 3.0 V	-	-	0.9	-	0.9	-	0.9	V
		V_{CC} = 5.5 V	-	-	1.65	-	1.65	-	1.65	V

Table 7. Static characteristics *...continued*

Voltages are referenced to GND (ground = 0 V).

Symbol	Parameter	Conditions	25 °C			–40 °C to +85 °C		–40 °C to +125 °C		Unit
			Min	Typ	Max	Min	Max	Min	Max	
V_{OH}	HIGH-level output voltage	$V_I = V_{IH}$ or V_{IL}								
		I_O = –50 μA; V_{CC} = 2.0 V	1.9	2.0	-	1.9	-	1.9	-	V
		I_O = –50 μA; V_{CC} = 3.0 V	2.9	3.0	-	2.9	-	2.9	-	V
		I_O = –50 μA; V_{CC} = 4.5 V	4.4	4.5	-	4.4	-	4.4	-	V
		I_O = –4.0 mA; V_{CC} = 3.0 V	2.58	-	-	2.48	-	2.40	-	V
		I_O = –8.0 mA; V_{CC} = 4.5 V	3.94	-	-	3.8	-	3.70	-	V
V_{OL}	LOW-level output voltage	$V_I = V_{IH}$ or V_{IL}								
		I_O = 50 μA; V_{CC} = 2.0 V	-	0	0.1	-	0.1	-	0.1	V
		I_O = 50 μA; V_{CC} = 3.0 V	-	0	0.1	-	0.1	-	0.1	V
		I_O = 50 μA; V_{CC} = 4.5 V	-	0	0.1	-	0.1	-	0.1	V
		I_O = 4.0 mA; V_{CC} = 3.0 V	-	-	0.36	-	0.44	-	0.55	V
		I_O = 8.0 mA; V_{CC} = 4.5 V	-	-	0.36	-	0.44	-	0.55	V
I_I	input leakage current	V_I = 5.5 V or GND; V_{CC} = 0 V to 5.5 V	-	-	0.1	-	1.0	-	2.0	μA
I_{CC}	supply current	$V_I = V_{CC}$ or GND; I_O = 0 A; V_{CC} = 5.5 V	-	-	1.0	-	10	-	40	μA
C_I	input capacitance		-	1.5	10	-	10	-	10	pF
For type 74AHCT1G79-Q100										
V_{IH}	HIGH-level input voltage	V_{CC} = 4.5 V to 5.5 V	2.0	-	-	2.0	-	2.0	-	V
V_{IL}	LOW-level input voltage	V_{CC} = 4.5 V to 5.5 V	-	-	0.8	-	0.8	-	0.8	V
V_{OH}	HIGH-level output voltage	$V_I = V_{IH}$ or V_{IL}; V_{CC} = 4.5 V								
		I_O = –50 μA	4.4	4.5	-	4.4	-	4.4	-	V
		I_O = –8.0 mA	3.94	-	-	3.8	-	3.70	-	V
V_{OL}	LOW-level output voltage	$V_I = V_{IH}$ or V_{IL}; V_{CC} = 4.5 V								
		I_O = 50 μA	-	0	0.1	-	0.1	-	0.1	V
		I_O = 8.0 mA	-	-	0.36	-	0.44	-	0.55	V
I_I	input leakage current	V_I = 5.5 V or GND; V_{CC} = 0 V to 5.5 V	-	-	0.1	-	1.0	-	2.0	μA
I_{CC}	supply current	$V_I = V_{CC}$ or GND; I_O = 0 A; V_{CC} = 5.5 V	-	-	1.0	-	10	-	40	μA
ΔI_{CC}	additional supply current	per input pin; V_I = 3.4 V; other inputs at V_{CC} or GND; I_O = 0 A; V_{CC} = 5.5 V	-	-	1.35	-	1.5	-	1.5	mA
C_I	input capacitance		-	1.5	10	-	10	-	10	pF

11. Dynamic characteristics

Table 8. Dynamic characteristics

GND = 0 V; $t_r = t_f = \leq 3.0$ ns. For test circuit, see Figure 6. For waveforms, see Figure 5.

Symbol	Parameter	Conditions		25 °C			–40 °C to +85 °C		–40 °C to +125 °C		Unit
				Min	Typ	Max	Min	Max	Min	Max	
For type 74AHC1G79-Q100											
t_{pd}	propagation delay	CP to Q	[1]								
		V_{CC} = 3.0 V to 3.6 V	[2]								
		C_L = 15 pF		-	4.9	8.4	1.0	9.8	1.0	11.5	ns
		C_L = 50 pF		-	6.9	12.0	1.0	14.0	1.0	15.5	ns
		V_{CC} = 4.5 V to 5.5 V	[3]								
		C_L = 15 pF		-	3.5	5.6	1.0	7.0	1.0	8.0	ns
		C_L = 50 pF		-	5.1	8.0	1.0	10.0	1.0	11.0	ns
t_{su}	set-up time	D to CP		3.0	1.0	-	3.0	-	4.0	-	ns
t_h	hold time	D to CP		+2.0	–1.0	-	2.0	-	3.0	-	ns
t_W	pulse width	clock HIGH or LOW		3.0	-	-	3.0	-	4.0	-	ns
f_{max}	maximum frequency			90	-	-	90	-	70	-	MHz
C_{PD}	power dissipation capacitance	per buffer; C_L = 50 pF; f = 1 MHz; V_I = GND to V_{CC}	[4]	-	15	-	-	-	-	-	pF
For type 74AHCT1G79-Q100											
t_{pd}	propagation delay	CP to Q	[1]								
		V_{CC} = 4.5 V to 5.5 V	[3]								
		C_L = 15 pF		-	3.5	5.0	1.0	6.0	1.0	8.0	ns
		C_L = 50 pF		-	5.0	8.0	1.0	10.0	1.0	11.0	ns
t_{su}	set-up time	D to CP		3.0	1.0	-	3.0	-	4.0	-	ns
t_h	hold time	D to CP		+2.0	–1.0	-	2.0	-	3.0	-	ns
t_W	pulse width	clock HIGH or LOW		3.0	-	-	3.0	-	4.0	-	ns
f_{max}	maximum frequency			90	-	-	90	-	70	-	MHz
C_{PD}	power dissipation capacitance	per buffer; C_L = 50 pF; f = 1 MHz; V_I = GND to V_{CC}	[4]	-	16	-	-	-	-	-	pF

[1] t_{pd} is the same as t_{PLH} and t_{PHL}.

[2] Typical values are measured at V_{CC} = 3.3 V.

[3] Typical values are measured at V_{CC} = 5.0 V.

[4] C_{PD} is used to determine the dynamic power dissipation P_D (μW).
$P_D = C_{PD} \times V_{CC}^2 \times f_i + \sum (C_L \times V_{CC}^2 \times f_o)$ where:
f_i = input frequency in MHz;
f_o = output frequency in MHz;
C_L = output load capacitance in pF;
V_{CC} = supply voltage in Volts.

12. Waveforms

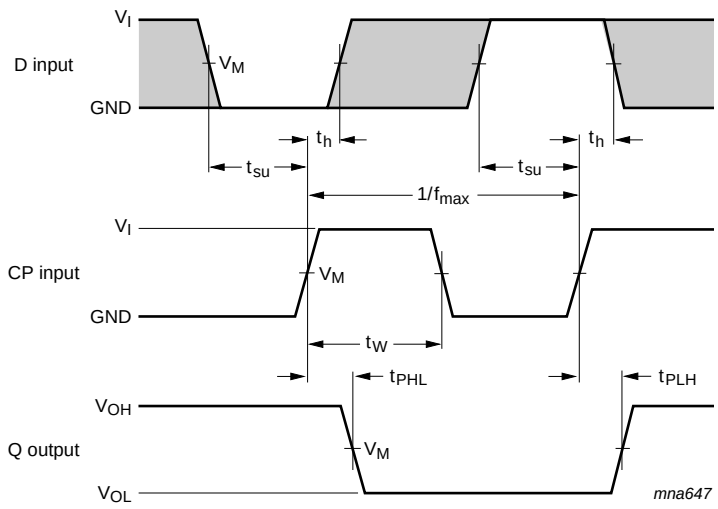

Measurement points are given in Table 9.

V_{OL} and V_{OH} are typical output voltage levels that occur with the output.

Fig 5. Clock (CP) to output (Q) propagation delay times, clock pulse width, D to set-up times, the CP to D hold times and maximum clock pulse frequency

Table 9. Measurement points

Type	Inputs		Output
	V_I	V_M	V_M
74AHC1G79-Q100	GND to V_{CC}	$0.5 \times V_{CC}$	$0.5 \times V_{CC}$
74AHCT1G79-Q100	GND to 3.0 V	1.5 V	$0.5 \times V_{CC}$

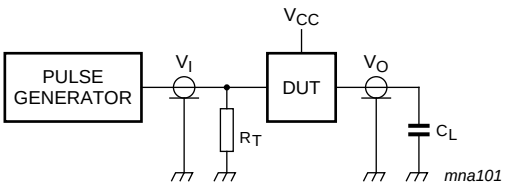

Test data is given in Table 8. Definitions for test circuit:

C_L = Load capacitance including jig and probe capacitance.

R_T = Termination resistance should be equal to output impedance Z_o of the pulse generator.

Fig 6. Test circuit for measuring switching times

13. Package outline

TSSOP5: plastic thin shrink small outline package; 5 leads; body width 1.25 mm **SOT353-1**

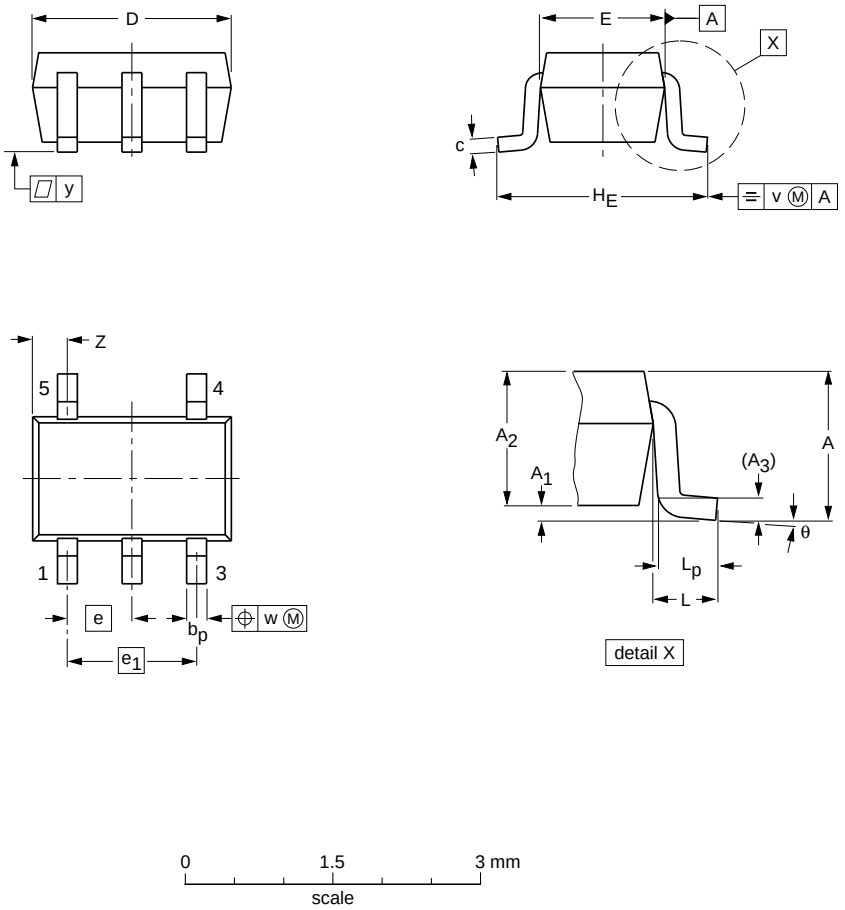

DIMENSIONS (mm are the original dimensions)

UNIT	A max.	A_1	A_2	A_3	b_p	c	D(1)	E(1)	e	e_1	H_E	L	L_p	v	w	y	Z(1)	θ
mm	1.1	0.1 0	1.0 0.8	0.15	0.30 0.15	0.25 0.08	2.25 1.85	1.35 1.15	0.65	1.3	2.25 2.0	0.425	0.46 0.21	0.3	0.1	0.1	0.60 0.15	7° 0°

Note

1. Plastic or metal protrusions of 0.15 mm maximum per side are not included.

OUTLINE VERSION	REFERENCES				EUROPEAN PROJECTION	ISSUE DATE
	IEC	JEDEC	JEITA			
SOT353-1		MO-203	SC-88A			~~00-09-01~~ 03-02-19

Fig 7. Package outline SOT353-1 (TSSOP5)

Plastic surface-mounted package; 5 leads **SOT753**

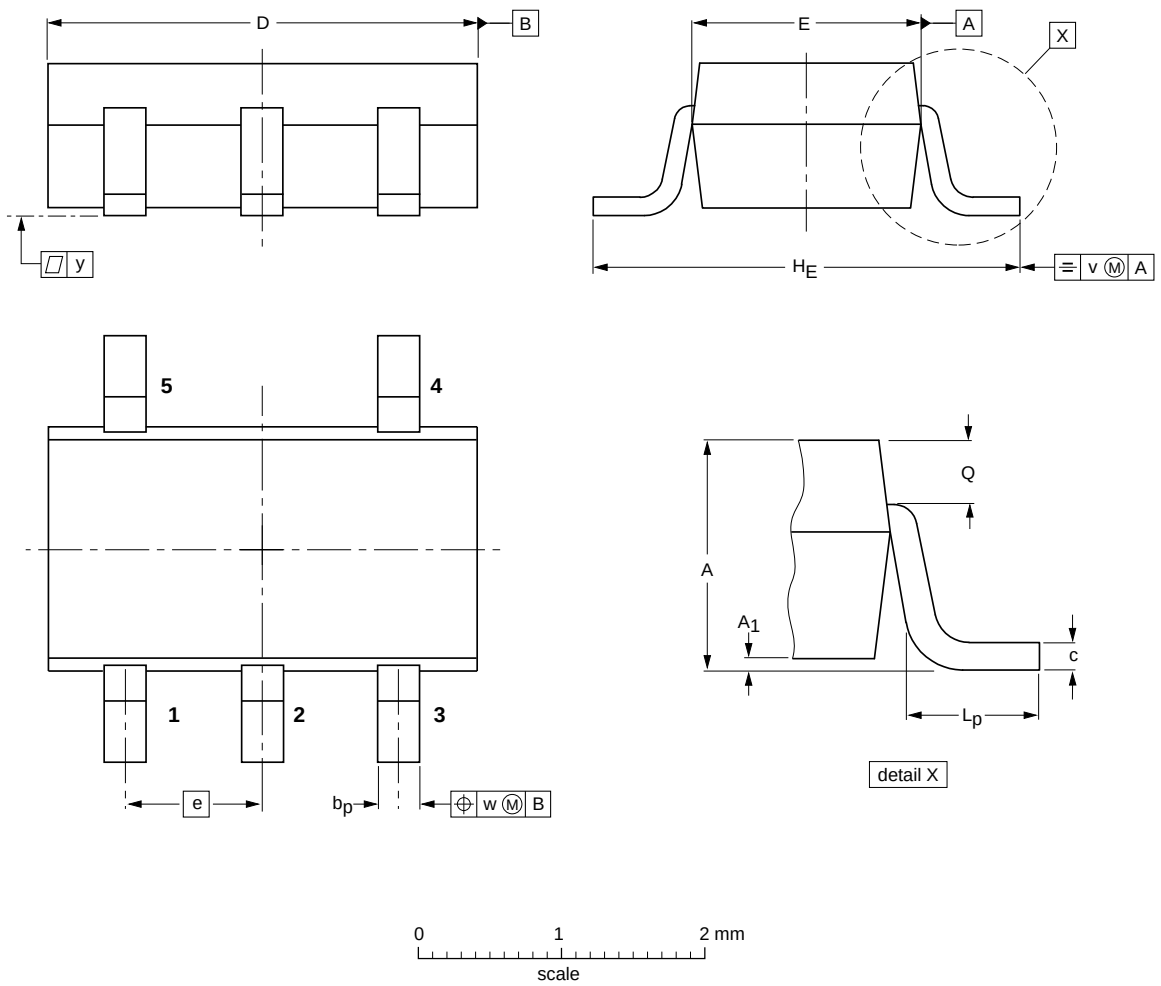

DIMENSIONS (mm are the original dimensions)

UNIT	A	A_1	b_p	c	D	E	e	H_E	L_p	Q	v	w	y
mm	1.1 0.9	0.100 0.013	0.40 0.25	0.26 0.10	3.1 2.7	1.7 1.3	0.95	3.0 2.5	0.6 0.2	0.33 0.23	0.2	0.2	0.1

OUTLINE VERSION	REFERENCES				EUROPEAN PROJECTION	ISSUE DATE
	IEC	JEDEC	JEITA			
SOT753			SC-74A			~~02-04-16~~ 06-03-16

Fig 8. Package outline SOT753 (SC-74A)

14. Abbreviations

Table 10. Abbreviations

Acronym	Description
CDM	Charged Device Model
DUT	Device Under Test
ESD	ElectroStatic Discharge
HBM	Human Body Model
MM	Machine Model
TTL	Transistor-Transistor Logic
MIL	Military

15. Revision history

Table 11. Revision history

Document ID	Release date	Data sheet status	Change notice	Supersedes
74AHC_AHCT1G79_Q100	20130516	Product data sheet	-	-

16. Legal information

16.1 Data sheet status

Document status[1][2]	Product status[3]	Definition
Objective [short] data sheet	Development	This document contains data from the objective specification for product development.
Preliminary [short] data sheet	Qualification	This document contains data from the preliminary specification.
Product [short] data sheet	Production	This document contains the product specification.

[1] Please consult the most recently issued document before initiating or completing a design.

[2] The term 'short data sheet' is explained in section "Definitions".

[3] The product status of device(s) described in this document may have changed since this document was published and may differ in case of multiple devices. The latest product status information is available on the Internet at URL http://www.nxp.com.

16.2 Definitions

Draft — The document is a draft version only. The content is still under internal review and subject to formal approval, which may result in modifications or additions. NXP Semiconductors does not give any representations or warranties as to the accuracy or completeness of information included herein and shall have no liability for the consequences of use of such information.

Short data sheet — A short data sheet is an extract from a full data sheet with the same product type number(s) and title. A short data sheet is intended for quick reference only and should not be relied upon to contain detailed and full information. For detailed and full information see the relevant full data sheet, which is available on request via the local NXP Semiconductors sales office. In case of any inconsistency or conflict with the short data sheet, the full data sheet shall prevail.

Product specification — The information and data provided in a Product data sheet shall define the specification of the product as agreed between NXP Semiconductors and its customer, unless NXP Semiconductors and customer have explicitly agreed otherwise in writing. In no event however, shall an agreement be valid in which the NXP Semiconductors product is deemed to offer functions and qualities beyond those described in the Product data sheet.

16.3 Disclaimers

Limited warranty and liability — Information in this document is believed to be accurate and reliable. However, NXP Semiconductors does not give any representations or warranties, expressed or implied, as to the accuracy or completeness of such information and shall have no liability for the consequences of use of such information. NXP Semiconductors takes no responsibility for the content in this document if provided by an information source outside of NXP Semiconductors.

In no event shall NXP Semiconductors be liable for any indirect, incidental, punitive, special or consequential damages (including - without limitation - lost profits, lost savings, business interruption, costs related to the removal or replacement of any products or rework charges) whether or not such damages are based on tort (including negligence), warranty, breach of contract or any other legal theory.

Notwithstanding any damages that customer might incur for any reason whatsoever, NXP Semiconductors' aggregate and cumulative liability towards customer for the products described herein shall be limited in accordance with the *Terms and conditions of commercial sale* of NXP Semiconductors.

Right to make changes — NXP Semiconductors reserves the right to make changes to information published in this document, including without limitation specifications and product descriptions, at any time and without notice. This document supersedes and replaces all information supplied prior to the publication hereof.

Suitability for use in automotive applications — This NXP Semiconductors product has been qualified for use in automotive applications. Unless otherwise agreed in writing, the product is not designed, authorized or warranted to be suitable for use in life support, life-critical or safety-critical systems or equipment, nor in applications where failure or malfunction of an NXP Semiconductors product can reasonably be expected to result in personal injury, death or severe property or environmental damage. NXP Semiconductors and its suppliers accept no liability for inclusion and/or use of NXP Semiconductors products in such equipment or applications and therefore such inclusion and/or use is at the customer's own risk.

Applications — Applications that are described herein for any of these products are for illustrative purposes only. NXP Semiconductors makes no representation or warranty that such applications will be suitable for the specified use without further testing or modification.

Customers are responsible for the design and operation of their applications and products using NXP Semiconductors products, and NXP Semiconductors accepts no liability for any assistance with applications or customer product design. It is customer's sole responsibility to determine whether the NXP Semiconductors product is suitable and fit for the customer's applications and products planned, as well as for the planned application and use of customer's third party customer(s). Customers should provide appropriate design and operating safeguards to minimize the risks associated with their applications and products.

NXP Semiconductors does not accept any liability related to any default, damage, costs or problem which is based on any weakness or default in the customer's applications or products, or the application or use by customer's third party customer(s). Customer is responsible for doing all necessary testing for the customer's applications and products using NXP Semiconductors products in order to avoid a default of the applications and the products or of the application or use by customer's third party customer(s). NXP does not accept any liability in this respect.

Limiting values — Stress above one or more limiting values (as defined in the Absolute Maximum Ratings System of IEC 60134) will cause permanent damage to the device. Limiting values are stress ratings only and (proper) operation of the device at these or any other conditions above those given in the Recommended operating conditions section (if present) or the Characteristics sections of this document is not warranted. Constant or repeated exposure to limiting values will permanently and irreversibly affect the quality and reliability of the device.

Terms and conditions of commercial sale — NXP Semiconductors products are sold subject to the general terms and conditions of commercial sale, as published at http://www.nxp.com/profile/terms, unless otherwise agreed in a valid written individual agreement. In case an individual agreement is concluded only the terms and conditions of the respective agreement shall apply. NXP Semiconductors hereby expressly objects to applying the customer's general terms and conditions with regard to the purchase of NXP Semiconductors products by customer.

No offer to sell or license — Nothing in this document may be interpreted or construed as an offer to sell products that is open for acceptance or the grant, conveyance or implication of any license under any copyrights, patents or other industrial or intellectual property rights.

Export control — This document as well as the item(s) described herein may be subject to export control regulations. Export might require a prior authorization from competent authorities.

Translations — A non-English (translated) version of a document is for reference only. The English version shall prevail in case of any discrepancy between the translated and English versions.

16.4 Trademarks

Notice: All referenced brands, product names, service names and trademarks are the property of their respective owners.

17. Contact information

For more information, please visit: **http://www.nxp.com**

For sales office addresses, please send an email to: **salesaddresses@nxp.com**

18. Contents

For more information, please visit: http://www.nxp.com
For sales office addresses, please send an email to: salesaddresses@nxp.com

Date of release: 16 May 2013
Document identifier: 74AHC_AHCT1G79_Q100