DATA SHEET

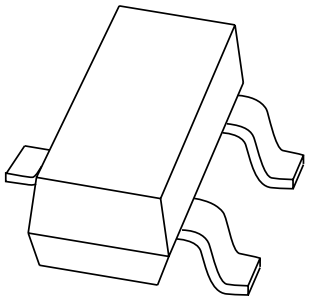

PLVA2600A series
Low-voltage avalanche regulator double diodes

Product data sheet
Supersedes data of 1999 May 10

2001 Oct 15

founded by Philips

Low-voltage avalanche regulator double diodes

PLVA2600A series

FEATURES

- Very low dynamic impedance at low currents: approximately $^1/_{20}$ of conventional series
- Hard breakdown knee
- Low noise: approximately $^1/_{10}$ of conventional series
- Total power dissipation: max. 250 mW
- Small tolerances of V_Z
- Working voltage range: nom. 5.0 to 6.8 V
- Non-repetitive peak reverse power dissipation: max. 30 W.

APPLICATIONS

- Low current, low power, low noise applications
- CMOS RAM back-up circuits
- Voltage stabilizers
- Voltage limiters
- Smoke detector relays.

DESCRIPTION

The PLVA2600A series consists of two high performance voltage regulator diodes with common anodes, in small SOT23 plastic SMD packages.

The series consists of PLVA2650A to PLVA2668A.

MARKING

TYPE NUMBER	MARKING CODE(1)
PLVA2650A	∗9J
PLVA2653A	∗9K
PLVA2656A	∗9L
PLVA2659A	∗9M
PLVA2662A	∗9N
PLVA2665A	∗9O
PLVA2668A	∗9P

Note

1. ∗ = p : Made in Hong Kong.
   ∗ = t : Made in Malaysia.
   ∗ = W: Made in China.

PINNING

PIN	DESCRIPTION
1	cathode (k1)
2	cathode (k2)
3	common anode

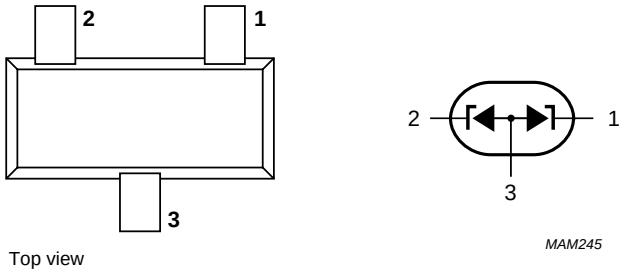

Fig.1 Simplified outline (SOT23) and symbol.

LIMITING VALUES

In accordance with the Absolute Maximum Rating System (IEC 60134).

SYMBOL	PARAMETER	CONDITIONS	MIN.	MAX.	UNIT
I_F	continuous forward current		–	250	mA
I_{ZRM}	repetitive peak working current	t_p = 100 μs; δ = 10%	–	250	mA
P_{ZSM}	non-repetitive peak reverse power dissipation	t_p = 100 μs; T_j = 150 °C	–	30	W
P_{tot}	total power dissipation	single diode loaded; T_{amb} = 25 °C; note 1	–	250	mW
		double diode loaded; T_{amb} = 25 °C; note 1	–	180	mW
T_{stg}	storage temperature		–65	+150	°C
T_j	junction temperature		–	150	°C

Note

1. Device mounted on an FR4 printed circuit-board.

ELECTRICAL CHARACTERISTICS

T_j = 25 °C unless otherwise specified.

SYMBOL	PARAMETER	CONDITIONS	MIN.	TYP.	MAX.	UNIT
V_F	forward voltage	I_F = 10 mA	–	–	0.9	V
V_Z	working voltage	I_Z = 250 μA				
	PLVA2650A		4.80	5.00	5.20	V
	PLVA2653A		5.10	5.30	5.50	V
	PLVA2656A		5.40	5.60	5.80	V
	PLVA2659A		5.70	5.90	6.10	V
	PLVA2662A		6.00	6.20	6.40	V
	PLVA2665A		6.30	6.50	6.70	V
	PLVA2668A		6.60	6.80	7.00	V
	working voltage	I_Z = 10 μA				
	PLVA2650A		–	4.30	–	V
	PLVA2653A		–	5.20	–	V
	PLVA2656A		–	5.51	–	V
	PLVA2659A		–	5.85	–	V
	PLVA2662A		–	6.19	–	V
	PLVA2665A		–	6.49	–	V
	PLVA2668A		–	6.80	–	V
R_Z	dynamic resistance	1 kHz superimposed;				
	PLVA2650A	I_{ZAC} is 10% of I_{ZDC}; I_Z = 250 μA	–	–	700	Ω
	PLVA2653A		–	–	250	Ω
	PLVA2656A to PLVA2668A		–	–	100	Ω
S_Z	temperature coefficient	I_Z = 250 μA				
	PLVA2650A		–	0.20	–	mV/K
	PLVA2653A		–	1.60	–	mV/K
	PLVA2656A		–	1.90	–	mV/K
	PLVA2659A		–	2.40	–	mV/K
	PLVA2662A		–	2.65	–	mV/K
	PLVA2665A		–	2.90	–	mV/K
	PLVA2668A		–	3.40	–	mV/K
I_R	reverse current	V_R = 80%; V_Z nominal				
	PLVA2650A		–	–	20000	nA
	PLVA2653A		–	–	5000	nA
	PLVA2656A		–	–	1000	nA
	PLVA2659A		–	–	500	nA
	PLVA2662A		–	–	100	nA
	PLVA2665A		–	–	50	nA
	PLVA2668A		–	–	10	nA

SYMBOL	PARAMETER	CONDITIONS	MIN.	TYP.	MAX.	UNIT
I_R	reverse current	V_R = 50%; V_Z nominal				
	PLVA2650A		–	34	–	nA
	PLVA2653A		–	22	–	nA
	PLVA2656A		–	1.1	–	nA
	PLVA2659A		–	0.9	–	nA
	PLVA2662A		–	0.9	–	nA
	PLVA2665A		–	0.9	–	nA
	PLVA2668A		–	0.8	–	nA
	reverse current	V_R = 90%; V_Z nominal				
	PLVA2650A		–	21	–	μA
	PLVA2653A		–	3.5	–	μA
	PLVA2656A		–	1.3	–	μA
	PLVA2659A		–	1.0	–	μA
	PLVA2662A		–	0.05	–	μA
	PLVA2665A		–	0.04	–	μA
	PLVA2668A		–	0.006	–	μA
ΔV_Z	line regulation					
	PLVA2659A to PLVA2668A	I_{LO} = 10 μA; I_{Hi} = 1 mA	–	–	0.1	V
	PLVA2656A	I_{LO} = 50 μA; I_{Hi} = 1 mA	–	–	0.1	V
	PLVA2650A	I_{LO} = 100 μA; I_{Hi} = 1 mA	–	–	0.4	V
	PLVA2653A	I_{LO} = 100 μA; I_{Hi} = 1 mA	–	–	0.2	V
V_n	noise voltage density	f = 1 kHz; B = 1 kHz; I_Z = 250 μA	–	–	1.0	$\frac{\mu V}{\sqrt{Hz}}$

THERMAL CHARACTERISTICS

SYMBOL	PARAMETER	CONDITIONS	VALUE	UNIT
$R_{th\ j\text{-}tp}$	thermal resistance from junction to tie-point		360	K/W
$R_{th\ j\text{-}a}$	thermal resistance from junction to ambient	note 1	500	K/W

Note

1. Device mounted on an FR4 printed circuit-board.

PACKAGE OUTLINE

Plastic surface mounted package; 3 leads **SOT23**

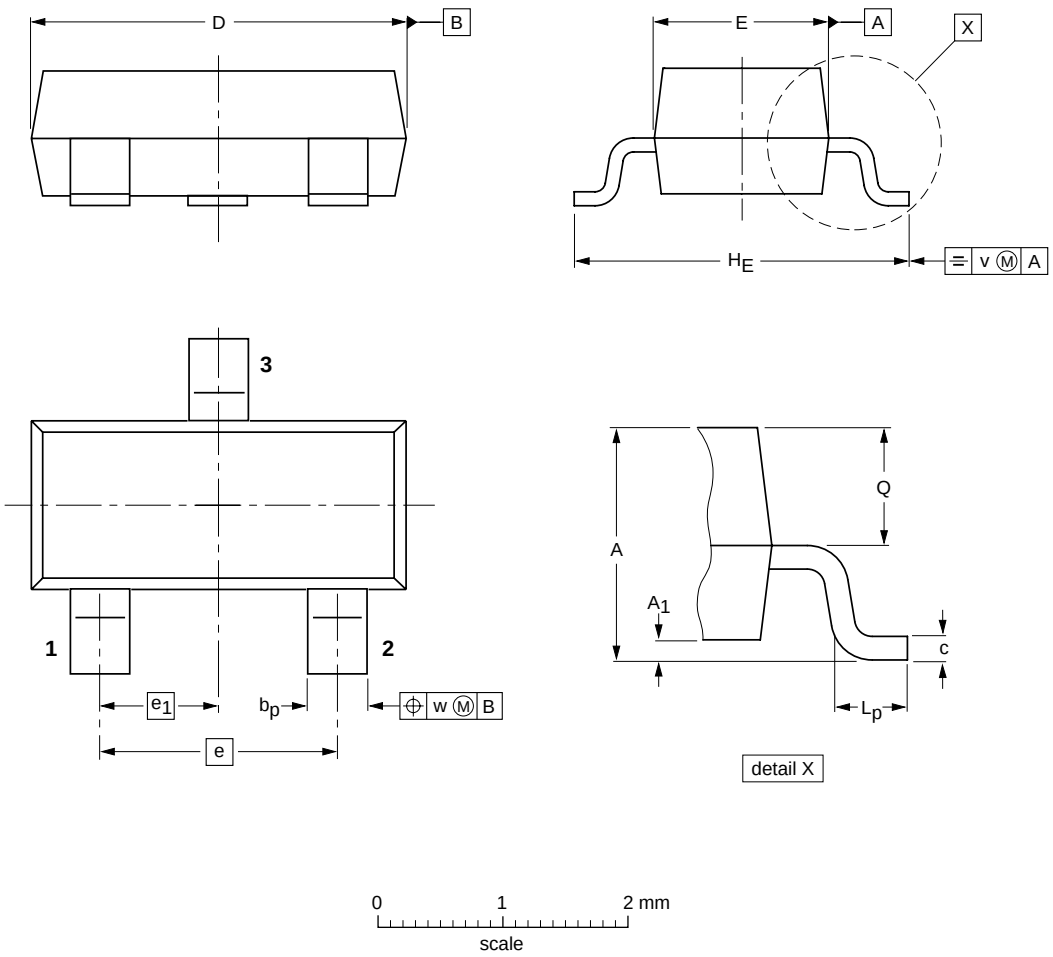

DIMENSIONS (mm are the original dimensions)

UNIT	A	A_1 max.	b_p	c	D	E	e	e_1	H_E	L_p	Q	v	w
mm	1.1 0.9	0.1	0.48 0.38	0.15 0.09	3.0 2.8	1.4 1.2	1.9	0.95	2.5 2.1	0.45 0.15	0.55 0.45	0.2	0.1

OUTLINE VERSION	REFERENCES				EUROPEAN PROJECTION	ISSUE DATE
	IEC	JEDEC	EIAJ			
SOT23		TO-236AB				~~97-02-28~~ 99-09-13

DATA SHEET STATUS

DOCUMENT STATUS[1]	PRODUCT STATUS[2]	DEFINITION
Objective data sheet	Development	This document contains data from the objective specification for product development.
Preliminary data sheet	Qualification	This document contains data from the preliminary specification.
Product data sheet	Production	This document contains the product specification.

Notes

1. Please consult the most recently issued document before initiating or completing a design.
2. The product status of device(s) described in this document may have changed since this document was published and may differ in case of multiple devices. The latest product status information is available on the Internet at URL http://www.nxp.com.

DISCLAIMERS

General — Information in this document is believed to be accurate and reliable. However, NXP Semiconductors does not give any representations or warranties, expressed or implied, as to the accuracy or completeness of such information and shall have no liability for the consequences of use of such information.

Right to make changes — NXP Semiconductors reserves the right to make changes to information published in this document, including without limitation specifications and product descriptions, at any time and without notice. This document supersedes and replaces all information supplied prior to the publication hereof.

Suitability for use — NXP Semiconductors products are not designed, authorized or warranted to be suitable for use in medical, military, aircraft, space or life support equipment, nor in applications where failure or malfunction of an NXP Semiconductors product can reasonably be expected to result in personal injury, death or severe property or environmental damage. NXP Semiconductors accepts no liability for inclusion and/or use of NXP Semiconductors products in such equipment or applications and therefore such inclusion and/or use is at the customer's own risk.

Applications — Applications that are described herein for any of these products are for illustrative purposes only. NXP Semiconductors makes no representation or warranty that such applications will be suitable for the specified use without further testing or modification.

Limiting values — Stress above one or more limiting values (as defined in the Absolute Maximum Ratings System of IEC 60134) may cause permanent damage to the device. Limiting values are stress ratings only and operation of the device at these or any other conditions above those given in the Characteristics sections of this document is not implied. Exposure to limiting values for extended periods may affect device reliability.

Terms and conditions of sale — NXP Semiconductors products are sold subject to the general terms and conditions of commercial sale, as published at http://www.nxp.com/profile/terms, including those pertaining to warranty, intellectual property rights infringement and limitation of liability, unless explicitly otherwise agreed to in writing by NXP Semiconductors. In case of any inconsistency or conflict between information in this document and such terms and conditions, the latter will prevail.

No offer to sell or license — Nothing in this document may be interpreted or construed as an offer to sell products that is open for acceptance or the grant, conveyance or implication of any license under any copyrights, patents or other industrial or intellectual property rights.

Export control — This document as well as the item(s) described herein may be subject to export control regulations. Export might require a prior authorization from national authorities.

Quick reference data — The Quick reference data is an extract of the product data given in the Limiting values and Characteristics sections of this document, and as such is not complete, exhaustive or legally binding.

NXP Semiconductors

Customer notification

This data sheet was changed to reflect the new company name NXP Semiconductors. No changes were made to the content, except for the legal definitions and disclaimers.

Contact information

For additional information please visit: **http://www.nxp.com**
For sales offices addresses send e-mail to: **salesaddresses@nxp.com**

© NXP B.V. 2009

All rights are reserved. Reproduction in whole or in part is prohibited without the prior written consent of the copyright owner.

The information presented in this document does not form part of any quotation or contract, is believed to be accurate and reliable and may be changed without notice. No liability will be accepted by the publisher for any consequence of its use. Publication thereof does not convey nor imply any license under patent- or other industrial or intellectual property rights.

Printed in The Netherlands 613514/04/pp8 Date of release: 2001 Oct 15 Document order number: 9397 750 08768

founded by

PHILIPS