DATA SHEET

SAF7129AH
Digital video encoder

Product specification
Supersedes data of 2003 Jun 13

2004 Mar 16

Philips
Semiconductors

PHILIPS

CONTENTS

1 FEATURES
2 GENERAL DESCRIPTION
3 ORDERING INFORMATION
4 QUICK REFERENCE DATA
5 BLOCK DIAGRAM
6 PINNING
7 FUNCTIONAL DESCRIPTION
7.1 Versatile fader
7.2 Data manager
7.3 Encoder
7.4 RGB processor
7.5 SECAM processor
7.6 Output interface/DACs
7.7 Synchronization
7.8 Clock
7.9 I^2C-bus interface
7.10 Input levels and formats
7.11 Bit allocation map
7.12 I^2C-bus format
7.13 Slave receiver
7.14 Slave transmitter
8 LIMITING VALUES
9 THERMAL CHARACTERISTICS
10 CHARACTERISTICS
10.1 Explanation of RTCI data bits
10.2 Teletext timing
11 APPLICATION INFORMATION
11.1 Digital output signals
12 PACKAGE OUTLINE
13 SOLDERING
13.1 Introduction to soldering surface mount packages
13.2 Reflow soldering
13.3 Wave soldering
13.4 Manual soldering
13.5 Suitability of surface mount IC packages for wave and reflow soldering methods
14 DATA SHEET STATUS
15 DEFINITIONS
16 DISCLAIMERS
17 PURCHASE OF PHILIPS I^2C COMPONENTS

1 FEATURES

- Monolithic CMOS 3.3 V device, 5 V I^2C-bus optional
- Digital PAL/NTSC/SECAM encoder
- System pixel frequency 13.5 MHz
- 54 MHz double-speed multiplexed D1 interface capable of splitting data into two separate channels (encoded and baseband)
- Three Digital-to-Analog Converters (DACs) for CVBS (CSYNC), VBS (CVBS) and C (CVBS) two times oversampled with 10-bit resolution (signals in brackets optional)
- Three DACs for RED (C_R), GREEN (Y) and BLUE (C_B) two times oversampled with 9-bit resolution (signals in brackets optional)
- Alternatively, an advanced composite sync is available on the CVBS output for RGB display centreing
- Real-time control of subcarrier
- Cross-colour reduction filter
- Closed captioning encoding and World Standard Teletext (WST) and North-American Broadcast Text System (NABTS) teletext encoding including sequencer and filter
- Copy Generation Management System (CGMS) encoding (CGMS described by standard CPR-1204 of EIAJ); 20 bits in lines 20/283 (NTSC) can be loaded via I^2C-bus
- Fast I^2C-bus control port (400 kHz)
- Line 23 Wide Screen Signalling (WSS) encoding
- Video Programming System (VPS) data encoding in line 16 (50/625 lines counting)
- Encoder can be master or slave
- Programmable horizontal and vertical input synchronization phase
- Programmable horizontal sync output phase
- Internal Colour Bar Generator (CBG)
- Controlled rise/fall times of output syncs and blanking
- On-chip crystal oscillator (3rd-harmonic or fundamental crystal)
- Down mode (low output voltage) or power-save mode of DACs
- QFP44 package.

2 GENERAL DESCRIPTION

The SAF7129AH encodes digital C_B-Y-C_R video data to an NTSC, PAL or SECAM CVBS or S-video signal. Simultaneously, RGB or bypassed but interpolated C_B-Y-C_R signals are available via three additional DACs. Through a 54 MHz multiplexed digital D1 input port, the circuit accepts two ITU-R BT.656 compatible C_B-Y-C_R data streams with 720 active pixels per line in 4 : 2 : 2 multiplexed formats. For example, an MPEG decoded data with overlay and MPEG decoded data without overlay, where one data stream is latched at the rising, the other one is latched at the falling clock edge.

It includes a sync/clock generator and on-chip DACs.

3 ORDERING INFORMATION

TYPE NUMBER	PACKAGE		
	NAME	DESCRIPTION	VERSION
SAF7129AH	QFP44	plastic quad flat package; 44 leads (lead length 1.6 mm); body 10 × 10 × 2 mm	SOT803-1

4 QUICK REFERENCE DATA

SYMBOL	PARAMETER	MIN.	TYP.	MAX.	UNIT
V_{DDA}	analog supply voltage	3.15	3.3	3.45	V
V_{DDD}	digital supply voltage	3.0	3.3	3.6	V
I_{DDA}	analog supply current	–	180	190	mA
I_{DDD}	digital supply current	–	40	55	mA
V_i	input signal voltage levels	TTL compatible			
$V_{o(p-p)}$	analog CVBS output signal voltage for a $^{100}/_{100}$ colour bar at 75/2 Ω load (peak-to-peak value)	–	1.23	–	V
R_L	load resistance	–	37.5	–	Ω
$LE_{lf(i)}$	low frequency integral linearity error	–	–	±3	LSB
$LE_{lf(d)}$	low frequency differential linearity error	–	–	±1	LSB
T_{amb}	ambient temperature	–40	–	+85	°C

5 BLOCK DIAGRAM

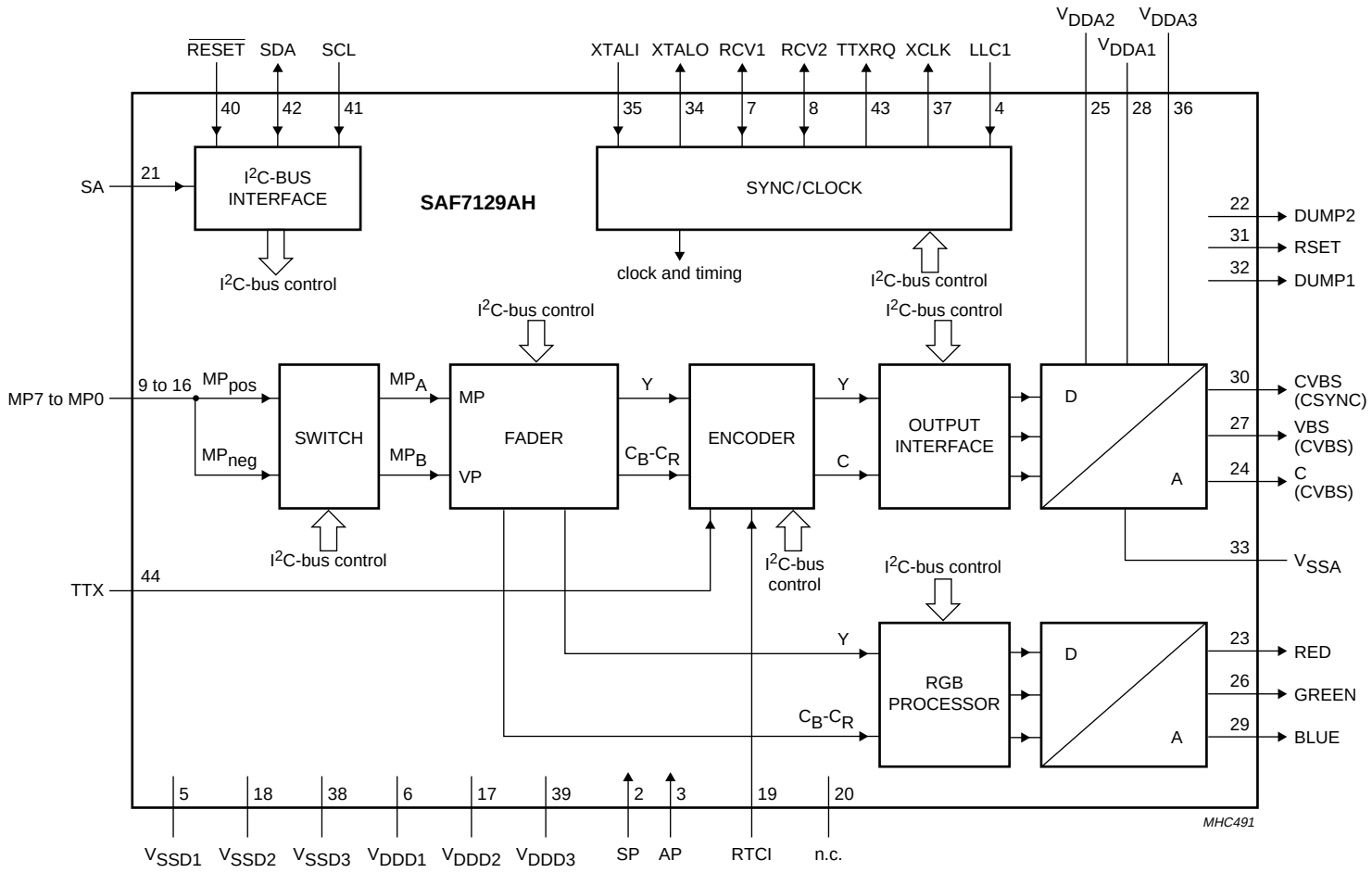

Fig.1 Block diagram.

6 PINNING

SYMBOL	PIN	TYPE	DESCRIPTION
RES	1	–	reserved pin; do not connect
SP	2	I	test pin; connected to digital ground for normal operation
AP	3	I	test pin; connected to digital ground for normal operation
LLC1	4	I	line-locked clock input; this is the 27 MHz master clock
V_{SSD1}	5	supply	digital ground 1
V_{DDD1}	6	supply	digital supply voltage 1
RCV1	7	I/O	raster control 1 for video port; this pin receives/provides a VS/FS/FSEQ signal
RCV2	8	I/O	raster control 2 for video port; this pin provides an HS pulse of programmable length or receives an HS pulse
MP7	9	I	double-speed 54 MHz MPEG port; it is an input for *"ITU-R BT.656"* style multiplexed C_B-Y-C_R data; data is sampled on the rising and falling clock edge; data sampled on the rising edge is then sent to the encoding part of the device; data sampled on the falling edge is sent to the RGB part of the device (or vice versa, depending on programming)
MP6	10	I	
MP5	11	I	
MP4	12	I	
MP3	13	I	
MP2	14	I	
MP1	15	I	
MP0	16	I	
V_{DDD2}	17	supply	digital supply voltage 2
V_{SSD2}	18	supply	digital ground 2
RTCI	19	I	real-time control input; if the LLC1 clock is provided by an SAF7113 or SAF7118, RTCI should be connected to the RTCO pin of the respective decoder to improve the signal quality
n.c.	20	–	not connected
SA	21	I	select I^2C-bus address; LOW selects slave address 88H, HIGH selects slave address 8CH
DUMP2	22	O	current return path 2 for DAC
RED	23	O	analog output of RED (C_R) signal
C	24	O	analog output of chrominance (CVBS) signal
V_{DDA2}	25	supply	analog supply voltage 2 for analog outputs
GREEN	26	O	analog output of GREEN (Y) signal
VBS	27	O	analog output of VBS (CVBS) signal
V_{DDA1}	28	supply	analog supply voltage 1 for analog outputs
BLUE	29	O	analog output of BLUE (C_B) signal
CVBS	30	O	analog output of CVBS (CSYNC) signal
RSET	31	O	a resistor of 1 kΩ (R_{out} = 37 kΩ) connected to V_{SSA} sets the full-scale DAC current
DUMP1	32	O	current return path 1 for DAC
V_{SSA}	33	supply	analog ground for the DAC reference ladder and the oscillator
XTALO	34	O	crystal oscillator output
XTALI	35	I	crystal oscillator input; if the oscillator is not used, this pin should be connected to ground
V_{DDA3}	36	supply	analog supply voltage 3 for the DAC reference ladder and the oscillator
XCLK	37	O	clock output of the crystal oscillator

SYMBOL	PIN	TYPE	DESCRIPTION
V_{SSD3}	38	supply	digital ground 3
V_{DDD3}	39	supply	digital supply voltage 3
$\overline{RESET}$	40	I	Reset input, active LOW. After reset is applied, all digital I/Os are in input mode; PAL black burst on CVBS, VBS and C; RGB outputs set to lowest voltage. The I^2C-bus receiver waits for the START condition.
SCL	41	I	I^2C-bus serial clock input
SDA	42	I/O	I^2C-bus serial data input/output
TTXRQ	43	O	teletext request output, indicating when text bits are requested
TTX	44	I	teletext bit stream input

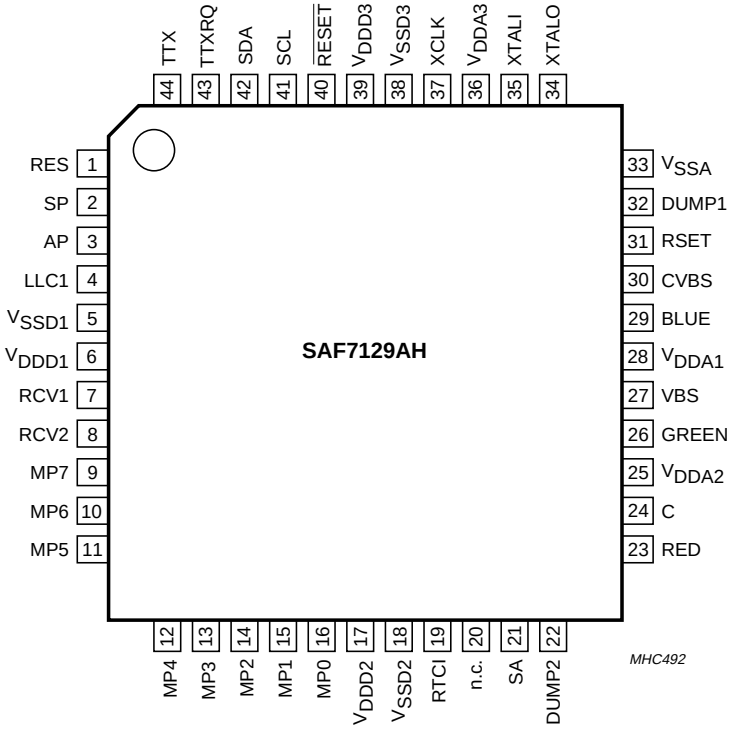

Fig.2 Pin configuration.

7 FUNCTIONAL DESCRIPTION

The digital video encoder encodes digital luminance and colour difference signals into analog CVBS, S-video and simultaneously RGB or C_R-Y-C_B signals. NTSC-M, PAL-B/G, SECAM and sub-standards are supported.

Both interlaced and non-interlaced operation is possible for all standards.

The basic encoder function consists of subcarrier generation, colour modulation and insertion of synchronization signals. Luminance and chrominance signals are filtered in accordance with the standard requirements of *"RS-170-A"* and *"ITU-R BT.470-3"*.

For ease of analog post filtering, the signals are twice oversampled with respect to the pixel clock before digital-to-analog conversion.

The total filter transfer characteristics are illustrated in Figs 8 to 13. The DACs for Y, C and CVBS are realized with full 10-bit resolution; 9-bit resolution for RGB output. The C_R-Y-C_B to RGB dematrix can be bypassed optionally in order to provide the upsampled C_R-Y-C_B input signals.

The 8-bit multiplexed C_B-Y-C_R formats are *"ITU-R BT.656"* (D1 format) compatible, but the SAV and EAV codes can be decoded optionally, when the device is operated in slave mode. Two independent data streams can be processed, one latched by the rising edge of LLC1, the other latched by the falling edge of LLC1. The purpose of that is e.g. to forward one of the data streams containing both video and On-Screen Display (OSD) information to the RGB outputs, and the other stream containing video only to the encoded outputs CVBS and S-video.

For optimum display of RGB signals through a euro-connector TV set, an early composite sync pulse (up to 31 LLC1 clock periods) can be provided on the CVBS output.

As a further alternative, the VBS and C outputs may provide a second and third CVBS signal.

It is also possible to connect a Philips digital video decoder (SAF7113 or SAF7118) to the SAF7129AH. Via the RTCI pin, connected to pin RTCO of a decoder, information concerning actual subcarrier, PAL-ID and definite subcarrier phase can be inserted.

The device synthesizes all necessary internal signals, colour subcarrier frequency and synchronization signals from that clock.

Wide screen signalling data can be loaded via the I^2C-bus and is inserted into line 23 for standards using 50 Hz field rate.

VPS data for program dependent automatic start and stop of such featured VCR's is loadable via I^2C-bus.

The IC also contains closed caption and extended data services encoding (line 21). It is also possible to load data for copy generation management system into line 20 of every field (525/60 line counting).

A number of possibilities are provided for setting different video parameters, such as:

- Black and blanking level control
- Colour subcarrier frequency
- Variable burst amplitude, etc.

During reset ($\overline{RESET}$ = LOW) and after reset is released, all digital I/O stages are set to input mode and the encoder is set to PAL mode and outputs a 'black burst' signal on CVBS and S-video outputs, while RGB outputs are set to their lowest output voltages. A reset forces the I^2C-bus interface to abort any running bus transfer.

7.1 Versatile fader

Important note: whenever the fader is activated with the SYMP bit set to a logic 1 (enabling the detection of embedded Start of Active Video (SAV) and End of Active Video (EAV)), codes 00H and FFH are not allowed within the actual video data (as prescribed by *"ITU-R BT.*656", anyway). If SAV (00H) has been detected, the fader automatically passes 100% of the respective signal until SAV will be detected.

Within the digital video encoder, two data streams can be faded against each other; these data streams can be input to the double speed MPEG port, which is able to separate two independent 27 MHz data streams MP_A and MP_B via a cross switch controlled by EDGE1 and EDGE2.

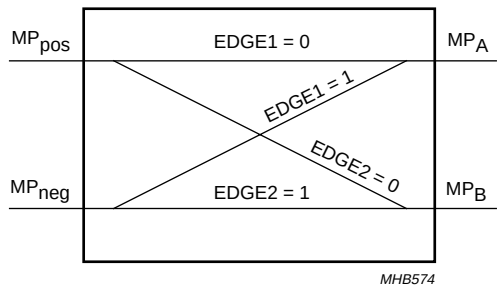

Fig.3 Cross switch.

7.1.1 CONFIGURATION EXAMPLES

Figs 4 to 7 show examples on how to configure the fader between the input ports and the outputs, separated into the composite (and S-video) encoder and the RGB encoder.

7.1.1.1 Configuration 1

Input MP_A can be faded into MP_B. The resulting output of the fader is then encoded simultaneously to composite (and S-video) and RGB output (RGBIN = ENCIN = 1). In this example, either MP_A or MP_B could be an overlay (menu) signal to be faded smoothly in and out.

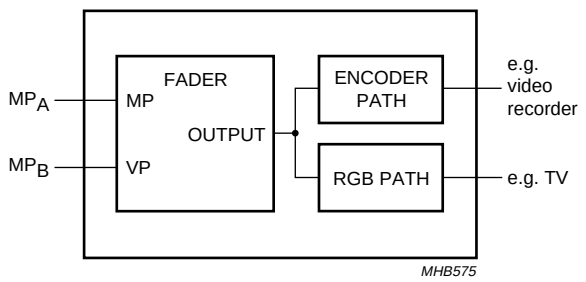

Fig.4 Configuration 1.

7.1.1.2 Configuration 2

Input MP_A can be faded into MP_B. The resulting output of the fader is then encoded to RGB output, while the signal coming from MP_B is fed directly to composite (and S-video) output (RGBIN = 1, ENCIN = 0). Also in this example, either MP_A or MP_B could be an overlay (menu) signal to be faded smoothly in and out, whereas the overlay appears only in the RGB output connected to the TV set.

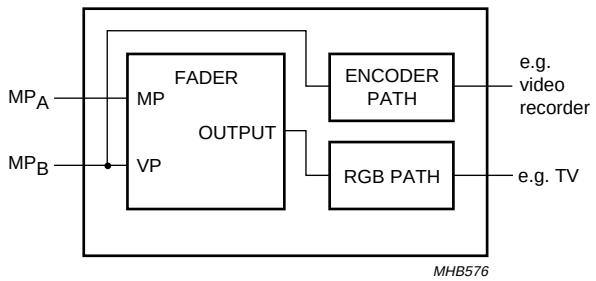

Fig.5 Configuration 2.

7.1.1.3 Configuration 3

Input MP_B is passed directly to the RGB output, assuming e.g. it contains video including overlay. MP_A is equivalently passed through the inactive fader to the composite (and S-video) output, assuming e.g. it contains video excluding overlay (RGBIN = 0, ENCIN = 1).

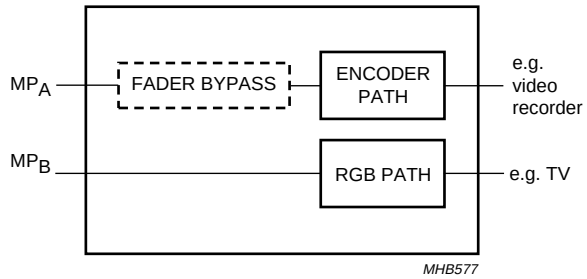

Fig.6 Configuration 3.

7.1.1.4 Configuration 4

Only MP_B input is in use; its signal appears both composite (and S-video) and RGB encoded (RGBIN = ENCIN = 0).

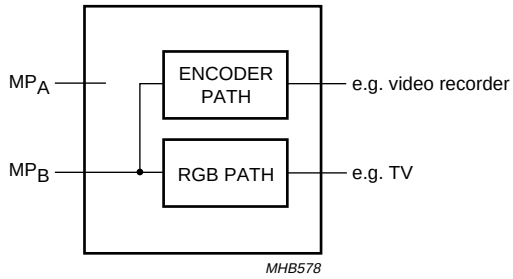

Fig.7 Configuration 4.

7.1.2 PARAMETERS OF THE FADER

Basically, there are three independent fade factors available, allowing for the equation:

$$\text{Output} = (\text{FADEx} \times \text{In1}) + [(1 - \text{FADEx}) \times \text{In2}]$$

Where x = 1, 2 or 3

Factor FADE1 is effective, when a colour in the data stream fed to the MPEG port fader input is recognized as being between KEY1L and KEY1U. That means, the colour is not identified by a single numeric value, but an upper and lower threshold in which a 24-bit YUV colour space can be defined. FADE1 = 00H results in 100% signal at the MPEG port fader input and 0% signal at the fader Video port input. Variation of 63 steps is possible up to FADE1 = 3FH, resulting in 0% signal at the MPEG port fader input and 100% signal at the fader Video port input.

Factor FADE2 is effective, when a colour in the data stream fed to the MPEG port fader input is recognized as being between KEY2L and KEY2U. FADE2 is to be seen in conjunction with a colour that is defined by a 24-bit internal Colour Look-Up Table (CLUT). FADE2 = 00H results in 100% of the internally defined LUT colour and 0% signal at the fader Video port input. Variation of 63 steps is possible up to FADE2 = 3FH, resulting in 0% of the internally defined LUT colour and 100% signal at the fader Video port input.

Finally, factor FADE3 is effective when a colour in the data stream fed to the MPEG port fader input is recognized as neither being between KEY1L and KEY1U nor being between KEY2L and KEY2U. FADE3 = 00H results in 100% signal at the MPEG port fader input and 0% signal at the fader Video port input. Variation of 63 steps is possible up to FADE3 = 3FH, resulting in 0% signal at the MPEG port fader input and 100% signal at the fader Video port input.

Optionally, all upper and lower thresholds can be ignored, enabling to fade signals only against the LUT colour.

If bit CFADM is set HIGH, all data at the MPEG port fader are faded against the LUT colour, if bit CFADV is set HIGH, all data at the Video port fader are faded against the LUT colour.

7.2 Data manager

In the data manager, alternatively to the external video data, a pre-defined colour look-up table located in this block can be read out in a pre-defined sequence (8 steps per active video line), achieving a colour bar test pattern generator without the need for an external data source.

7.3 Encoder

7.3.1 VIDEO PATH

The encoder generates out of Y, U and V baseband signals luminance and colour subcarrier output signals, suitable for use as CVBS or separate Y and C signals.

Luminance is modified in gain and in offset (latter programmable in a certain range to enable different black level set-ups). A blanking level can be set after insertion of a fixed synchronization pulse tip level in accordance with standard composite synchronization schemes.

In order to enable easy analog post filtering, luminance is interpolated from a 13.5 MHz data rate to a 27 MHz data rate, providing luminance in 10-bit resolution. The transfer characteristics of the luminance interpolation filter are illustrated in Figs 10 and 11. Appropriate transients at start/end of active video and for synchronization pulses are ensured.

Chrominance is modified in gain (programmable separately for U and V), standard dependent burst is inserted, before baseband colour signals are interpolated from a 6.75 MHz data rate to a 27 MHz data rate. One of the interpolation stages can be bypassed, thus providing a higher colour bandwidth, which can be made use of for Y and C output. The transfer characteristics of the chrominance interpolation filter are illustrated in Figs 8 and 9.

The amplitude, beginning and ending of the inserted burst, is programmable in a certain range that is suitable for standard signals and for special effects. Behind the succeeding quadrature modulator, colour in a 10-bit resolution is provided on the subcarrier.

The numeric ratio between Y and C outputs is in accordance with the respective standards.

7.3.2 TELETEXT INSERTION AND ENCODING

Pin TTX receives a WST or NABTS teletext bitstream sampled at the LLC clock. Two protocols are provided:

- At each rising edge of output signal (TTXRQ) a single teletext bit has to be provided after a programmable delay at input pin TTX
- The signal TTXRQ performs only a single LOW-to-HIGH transition and remains at HIGH level for 360, 296 or 288 teletext bits, depending on the chosen standard.

Phase variant interpolation is achieved on this bitstream in the internal teletext encoder, providing sufficient small phase jitter on the output text lines.

TTXRQ provides a fully programmable request signal to the teletext source, indicating the insertion period of bitstream at lines which are selectable independently for both fields. The internal insertion window for text is set to 360 (PAL-WST), 296 (NTSC-WST) or 288 (NABTS) teletext bits including clock run-in bits. The protocol and timing are illustrated in Fig.23.

7.3.3 VIDEO PROGRAMMING SYSTEM (VPS) ENCODING

Five bytes of VPS information can be loaded via the I^2C-bus and will be encoded in the appropriate format into line 16.

7.3.4 CLOSED CAPTION ENCODER

Using this circuit, data in accordance with the specification of closed caption or extended data service, delivered by the control interface, can be encoded (line 21). Two dedicated pairs of bytes (two bytes per field), each pair preceded by run-in clocks and framing code, are possible.

The actual line number where data is to be encoded in, can be modified in a certain range.

The data clock frequency is in accordance with the definition for NTSC-M standard 32 times horizontal line frequency.

Data LOW at the output of the DACs corresponds to 0 IRE, data HIGH at the output of the DACs corresponds to approximately 50 IRE.

It is also possible to encode closed caption data for 50 Hz field frequencies at 32 times horizontal line frequency.

7.4 RGB processor

This block contains a dematrix in order to produce red, green and blue signals to be fed to a SCART plug.

Before Y, C_B and C_R signals are de-matrixed, individual gain adjustment for Y and colour difference signals and 2 times oversampling for luminance and 4 times oversampling for colour difference signals is performed. The transfer curves of luminance and colour difference components of RGB are illustrated in Figs 12 and 13.

7.5 SECAM processor

SECAM specific pre-processing is achieved by a pre-emphasis of colour difference signals (for gain and phase see Figs 14 and 15).

A baseband frequency modulator with a reference frequency shifted from 4.286 MHz to DC carries out SECAM modulation in accordance with appropriate standard or optionally wide clipping limits.

After the HF pre-emphasis, also applied on a DC reference carrier (anti-Cloche filter; see Figs 16 and 17), line-by-line sequential carriers with black reference of 4.25 MHz (Db) and 4.40625 MHz (Dr) are generated using specified values for FSC programming bytes.

Alternating phase reset in accordance with SECAM standard is carried out automatically. During vertical blanking, the so-called “bottle pulses” are not provided.

7.6 Output interface/DACs

In the output interface, encoded Y and C signals are converted from digital-to-analog in a 10-bit resolution. Y and C signals are also combined to a 10-bit CVBS signal.

The CVBS output occurs with the same processing delay (equal to 82 LLC clock periods, measured from MP input to the analog outputs) as the Y, C and RGB outputs. Absolute amplitude at the input of the DAC for CVBS is reduced by $^{15}/_{16}$ with respect to Y and C DACs to make maximum use of conversion ranges.

Red, green and blue signals are also converted from digital-to-analog, each providing a 9-bit resolution.

Outputs of the DACs can be set together via software control to minimum output voltage (approximately 0.2 V DC) for either purpose. Alternatively, the buffers can be switched into 3-state output condition; this allows for a ‘wired AND’ configuration with other 3-state outputs and can also be used as a power-save mode.

7.7 Synchronization

The synchronization of the SAF7129AH is able to operate in two modes; slave mode and master mode.

In master mode (see Fig.19), the circuit generates all necessary timings in the video signal itself, and it can provide timing signals at the RCV1 and RCV2 ports. In slave mode, it accepts timing information either from the RCV pins or from the embedded timing data of the ITU-R BT.656 data stream.

For the SAF7129AH, the only difference between master and slave mode is that it ignores the timing information at its inputs in master mode. Thus, if in slave mode, any timing information is missing, the IC will continue running free without a visible effect. But there must not be any additional pulses (with wrong phase) because the circuit will not ignore them.

In slave mode (see Fig.18), an interface circuit decides, which signal is expected at the RCV1 port and which information is taken from its active slope. The polarity can be chosen. If PRCV1 is logic 0, the rising slope will be active.

The signal can be:

- A Vertical Sync (VS) pulse; the active slope sets the vertical phase
- An odd/even signal; the active slope sets the vertical phase, the internal field flag to odd and optionally sets the horizontal phase
- A Field Sequence (FSEQ) signal; it marks the first field of the 4 (NTSC), 8 (PAL) respectively 12 (SECAM) field sequences. In addition to the odd/even signal, it also sets the PAL phase and optionally defines the subcarrier phase.

On the RCV2 port, the IC can provide a horizontal pulse with programmable start and stop phase; this pulse can be inhibited in the vertical blanking period to build up, for example, a composite blanking signal.

The horizontal phase can be set via a separate input RCV2. In the event of VS pulses at RCV1, this is mandatory. It is also possible to set the signal path to blank via this input.

From the ITU-R BT.656 data stream, the SAF7129AH decodes only the start of the first line in the odd field. All other information is ignored and may miss. If this kind of slave mode is active, the RCV pins may be switched to output mode.

In slave mode, the horizontal trigger phase can be programmed to any point in the line, the vertical phase from line 0 to line 15 counted from the first serration pulse in half line steps.

Whenever synchronization information cannot be derived directly from the inputs, the SAF7129AH will calculate it from the internal horizontal, vertical and PAL phase. This gives good flexibility with respect to external synchronization, but the circuit does not suppress illegal settings. In such an event, the odd/even information may vanish as it does in the non-interlaced modes.

In master mode, the line lengths are fixed to 1728 clocks at 50 Hz and 1716 clocks at 60 Hz. To allow non-interlaced frames, the field lengths can be varied by ±0.5 lines. In the event of non-interlace, the SAF7129AH does not provide odd/even information and the output signal does not contain the PAL ‘Bruch sequence’.

At the RCV1 pin the IC can provide:

- A Vertical Sync (VS) signal with 2.5 (50 Hz) or 3 (60 Hz) lines duration
- An odd/even signal which is LOW in odd fields
- A Field Sequence (FSEQ) signal which is HIGH in the first field of the 4, 8 respectively 12 field sequences.

At the RCV2 pin, there is a horizontal pulse of programmable phase and duration available. This pulse can be suppressed in the programmable inactive part of a field, giving a composite blank signal.

The directions and polarities of the RCV ports can be chosen independently. Timing references can be found in Tables 52 and 60.

7.8 Clock

The input to LLC1 can either be an external clock source or the buffered on-chip clock XCLK. The internal crystal oscillator can be run with either a 3rd-harmonic or a fundamental crystal frequency.

7.9 I^2C-bus interface

The I^2C-bus interface is a standard slave transceiver, supporting 7-bit slave addresses and 400 kbits/s guaranteed transfer rate. It uses 8-bit subaddressing with an auto-increment function. All registers are write and readable, except one read only status byte.

The I^2C-bus slave address is defined as 88H with pin 21 (SA) tied LOW and as 8CH with pin 21 (SA) tied HIGH.

7.10 Input levels and formats

The SAF7129AH expects digital Y, C_B and C_R data with levels (digital codes) in accordance with *"ITU-R BT.601"*.

For C and CVBS outputs, deviating amplitudes of the colour difference signals can be compensated by independent gain control setting, while gain for luminance is set to predefined values, distinguishable for 7.5 IRE set-up or without set-up.

The RGB, respectively C_R-Y-C_B path features a gain setting individually for luminance (GY) and colour difference signals (GCD).

Reference levels are measured with a colour bar, 100% white, 100% amplitude and 100% saturation.

Table 1 *"ITU-R BT.601"* signal component levels

COLOUR	SIGNALS(1)					
	Y	C_B	C_R	R(2)	G(2)	B(2)
White	235	128	128	235	235	235
Yellow	210	16	146	235	235	16
Cyan	170	166	16	16	235	235
Green	145	54	34	16	235	16
Magenta	106	202	222	235	16	235
Red	81	90	240	235	16	16
Blue	41	240	110	16	16	235
Black	16	128	128	16	16	16

Notes

1. Transformation:
   a) $R = Y + 1.3707 \times (C_R - 128)$
   b) $G = Y - 0.3365 \times (C_B - 128) - 0.6982 \times (C_R - 128)$
   c) $B = Y + 1.7324 \times (C_B - 128)$.
2. Representation of R, G and B (or C_R, Y and C_B) at the output is 9 bits at 27 MHz.

Table 2 8-bit multiplexed format (similar to *"ITU-R BT.601"*)

TIME	BITS							
	0	1	2	3	4	5	6	7
Sample	C_B0	Y0	C_R0	Y1	C_B2	Y2	C_R2	Y3
Luminance pixel number	0		1		2		3	
Colour pixel number	0				2			

7.11 Bit allocation map

Table 3 Slave receiver (slave address 88H)

REGISTER FUNCTION	SUBADDR	DATA BYTE[1]							
		D7	D6	D5	D4	D3	D2	D1	D0
Status byte (read only)	00H	VER2	VER1	VER0	CCRDO	CCRDE	0	FSEQ	O_E
Null	01H to 25H	0	0	0	0	0	0	0	0
Wide screen signal	26H	WSS7	WSS6	WSS5	WSS4	WSS3	WSS2	WSS1	WSS0
Wide screen signal	27H	WSSON	0	WSS13	WSS12	WSS11	WSS10	WSS9	WSS8
Real-time control, burst start	28H	DECCOL	DECFIS	BS5	BS4	BS3	BS2	BS1	BS0
Burst end	29H	0	0	BE5	BE4	BE3	BE2	BE1	BE0
Copy generation 0	2AH	CG07	CG06	CG05	CG04	CG03	CG02	CG01	CG00
Copy generation 1	2BH	CG15	CG14	CG13	CG12	CG11	CG10	CG09	CG08
CG enable, copy generation 2	2CH	CGEN	0	0	0	CG19	CG18	CG17	CG16
Output port control	2DH	CVBSEN1	CVBSEN0	CVBSTRI	YTRI	CTRI	RTRI	GTRI	BTRI
Null	2EH to 37H	0	0	0	0	0	0	0	0
Gain luminance for RGB	38H	0	0	0	GY4	GY3	GY2	GY1	GY0
Gain colour difference for RGB	39H	0	0	0	GCD4	GCD3	GCD2	GCD1	GCD0
Input port control 1	3AH	CBENB	0	0	SYMP	DEMOFF	CSYNC	MP2C	VP2C
Key colour 1 lower limit U	42H	KEY1LU7	KEY1LU6	KEY1LU5	KEY1LU4	KEY1LU3	KEY1LU2	KEY1LU1	KEY1LU0
Key colour 1 lower limit V	43H	KEY1LV7	KEY1LV6	KEY1LV5	KEY1LV4	KEY1LV3	KEY1LV2	KEY1LV1	KEY1LV0
Key colour 1 lower limit Y	44H	KEY1LY7	KEY1LY6	KEY1LY5	KEY1LY4	KEY1LY3	KEY1LY2	KEY1LY1	KEY1LY0
Key colour 2 lower limit U	45H	KEY2LU7	KEY2LU6	KEY2LU5	KEY2LU4	KEY2LU3	KEY2LU2	KEY2LU1	KEY2LU0
Key colour 2 lower limit V	46H	KEY2LV7	KEY2LV6	KEY2LV5	KEY2LV4	KEY2LV3	KEY2LV2	KEY2LV1	KEY2LV0
Key colour 2 lower limit Y	47H	KEY2LY7	KEY2LY6	KEY2LY5	KEY2LY4	KEY2LY3	KEY2LY2	KEY2LY1	KEY2LY0
Key colour 1 upper limit U	48H	KEY1UU7	KEY1UU6	KEY1UU5	KEY1UU4	KEY1UU3	KEY1UU2	KEY1UU1	KEY1UU0
Key colour 1 upper limit V	49H	KEY1UV7	KEY1UV6	KEY1UV5	KEY1UV4	KEY1UV3	KEY1UV2	KEY1UV1	KEY1UV0
Key colour 1 upper limit Y	4AH	KEY1UY7	KEY1UY6	KEY1UY5	KEY1UY4	KEY1UY3	KEY1UY2	KEY1UY1	KEY1UY0
Key colour 2 upper limit U	4BH	KEY2UU7	KEY2UU6	KEY2UU5	KEY2UU4	KEY2UU3	KEY2UU2	KEY2UU1	KEY2UU0
Key colour 2 upper limit V	4CH	KEY2UV7	KEY2UV6	KEY2UV5	KEY2UV4	KEY2UV3	KEY2UV2	KEY2UV1	KEY2UV0
Key colour 2 upper limit Y	4DH	KEY2UY7	KEY2UY6	KEY2UY5	KEY2UY4	KEY2UY3	KEY2UY2	KEY2UY1	KEY2UY0
Fade factor key colour 1	4EH	0	0	FADE15	FADE14	FADE13	FADE12	FADE11	FADE10
CFade, Fade factor key colour 2	4FH	CFADEM	CFADEV	FADE25	FADE24	FADE23	FADE22	FADE21	FADE20

REGISTER FUNCTION	SUBADDR	DATA BYTE(1)							
		D7	D6	D5	D4	D3	D2	D1	D0
Fade factor other	50H	0	0	FADE35	FADE34	FADE33	FADE32	FADE31	FADE30
Look-up table key colour 2 U	51H	LUTU7	LUTU6	LUTU5	LUTU4	LUTU3	LUTU2	LUTU1	LUTU0
Look-up table key colour 2 V	52H	LUTV7	LUTV6	LUTV5	LUTV4	LUTV3	LUTV2	LUTV1	LUTV0
Look-up table key colour 2 Y	53H	LUTY7	LUTY6	LUTY5	LUTY4	LUTY3	LUTY2	LUTY1	LUTY0
VPS enable, input control 2	54H	VPSEN	0	ENCIN	RGBIN	DELIN	VPSEL	EDGE2	EDGE1
VPS byte 5	55H	VPS57	VPS56	VPS55	VPS54	VPS53	VPS52	VPS51	VPS50
VPS byte 11	56H	VPS117	VPS116	VPS115	VPS114	VPS113	VPS112	VPS111	VPS110
VPS byte 12	57H	VPS127	VPS126	VPS125	VPS124	VPS123	VPS122	VPS121	VPS120
VPS byte 13	58H	VPS137	VPS136	VPS135	VPS134	VPS133	VPS132	VPS131	VPS130
VPS byte 14	59H	VPS147	VPS146	VPS145	VPS144	VPS143	VPS142	VPS141	VPS140
Chrominance phase	5AH	CHPS7	CHPS6	CHPS5	CHPS4	CHPS3	CHPS2	CHPS1	CHPS0
Gain U	5BH	GAINU7	GAINU6	GAINU5	GAINU4	GAINU3	GAINU2	GAINU1	GAINU0
Gain V	5CH	GAINV7	GAINV6	GAINV5	GAINV4	GAINV3	GAINV2	GAINV1	GAINV0
Gain U MSB, real-time control, black level	5DH	GAINU8	DECOE	BLCKL5	BLCKL4	BLCKL3	BLCKL2	BLCKL1	BLCKL0
Gain V MSB, real-time control, blanking level	5EH	GAINV8	DECPH	BLNNL5	BLNNL4	BLNNL3	BLNNL2	BLNNL1	BLNNL0
CCR, blanking level VBI	5FH	CCRS1	CCRS0	BLNVB5	BLNVB4	BLNVB3	BLNVB2	BLNVB1	BLNVB0
Null	60H	0	0	0	0	0	0	0	0
Standard control	61H	DOWNB	DOWNA	INPI	YGS	SECAM	SCBW	PAL	FISE
RTC enable, burst amplitude	62H	RTCE	BSTA6	BSTA5	BSTA4	BSTA3	BSTA2	BSTA1	BSTA0
Subcarrier 0	63H	FSC07	FSC06	FSC05	FSC04	FSC03	FSC02	FSC01	FSC00
Subcarrier 1	64H	FSC15	FSC14	FSC13	FSC12	FSC11	FSC10	FSC09	FSC08
Subcarrier 2	65H	FSC23	FSC22	FSC21	FSC20	FSC19	FSC18	FSC17	FSC16
Subcarrier 3	66H	FSC31	FSC30	FSC29	FSC28	FSC27	FSC26	FSC25	FSC24
Line 21 odd 0	67H	L21O07	L21O06	L21O05	L21O04	L21O03	L21O02	L21O01	L21O00
Line 21 odd 1	68H	L21O17	L21O16	L21O15	L21O14	L21O13	L21O12	L21O11	L21O10
Line 21 even 0	69H	L21E07	L21E06	L21E05	L21E04	L21E03	L21E02	L21E01	L21E00
Line 21 even 1	6AH	L21E17	L21E16	L21E15	L21E14	L21E13	L21E12	L21E11	L21E10
RCV port control	6BH	SRCV11	SRCV10	TRCV2	ORCV1	PRCV1	CBLF	ORCV2	PRCV2
Trigger control	6CH	HTRIG7	HTRIG6	HTRIG5	HTRIG4	HTRIG3	HTRIG2	HTRIG1	HTRIG0

REGISTER FUNCTION	SUBADDR	DATA BYTE[1]							
		D7	D6	D5	D4	D3	D2	D1	D0
Trigger control	6DH	HTRIG10	HTRIG9	HTRIG8	VTRIG4	VTRIG3	VTRIG2	VTRIG1	VTRIG0
Multi control	6EH	SBLBN	BLCKON	PHRES1	PHRES0	LDEL1	LDEL0	FLC1	FLC0
Closed caption, teletext enable	6FH	CCEN1	CCEN0	TTXEN	SCCLN4	SCCLN3	SCCLN2	SCCLN1	SCCLN0
RCV2 output start	70H	RCV2S7	RCV2S6	RCV2S5	RCV2S4	RCV2S3	RCV2S2	RCV2S1	RCV2S0
RCV2 output end	71H	RCV2E7	RCV2E6	RCV2E5	RCV2E4	RCV2E3	RCV2E2	RCV2E1	RCV2E0
MSBs RCV2 output	72H	0	RCV2E10	RCV2E9	RCV2E8	0	RCV2S10	RCV2S9	RCV2S8
TTX request H start	73H	TTXHS7	TTXHS6	TTXHS5	TTXHS4	TTXHS3	TTXHS2	TTXHS1	TTXHS0
TTX request H delay	74H	TTXHD7	TTXHD6	TTXHD5	TTXHD4	TTXHD3	TTXHD2	TTXHD1	TTXHD0
CSYNC advance, Vsync shift	75H	CSYNCA4	CSYNCA3	CSYNCA2	CSYNCA1	CSYNCA0	VS_S2	VS_S1	VS_S0
TTX odd request vertical start	76H	TTXOVS7	TTXOVS6	TTXOVS5	TTXOVS4	TTXOVS3	TTXOVS2	TTXOVS1	TTXOVS0
TTX odd request vertical end	77H	TTXOVE7	TTXOVE6	TTXOVE5	TTXOVE4	TTXOVE3	TTXOVE2	TTXOVE1	TTXOVE0
TTX even request vertical start	78H	TTXEVS7	TTXEVS6	TTXEVS5	TTXEVS4	TTXEVS3	TTXEVS2	TTXEVS1	TTXEVS0
TTX even request vertical end	79H	TTXEVE7	TTXEVE6	TTXEVE5	TTXEVE4	TTXEVE3	TTXEVE2	TTXEVE1	TTXEVE0
First active line	7AH	FAL7	FAL6	FAL5	FAL4	FAL3	FAL2	FAL1	FAL0
Last active line	7BH	LAL7	LAL6	LAL5	LAL4	LAL3	LAL2	LAL1	LAL0
TTX mode, MSB vertical	7CH	TTX60	LAL8	TTXO	FAL8	TTXEVE8	TTXOVE8	TTXEVS8	TTXOVS8
Null	7DH	0	0	0	0	0	0	0	0
Disable TTX line	7EH	LINE12	LINE11	LINE10	LINE9	LINE8	LINE7	LINE6	LINE5
Disable TTX line	7FH	LINE20	LINE19	LINE18	LINE17	LINE16	LINE15	LINE14	LINE13

Note

1. All bits labelled ‘0’ are reserved. They must be programmed with logic 0.

7.12 I²C-bus format

Table 4 I²C-bus address; see Table 5

S	SLAVE ADDRESS	ACK	SUBADDRESS	ACK	DATA 0	ACK	--------	DATA n	ACK	P

Table 5 Explanation of Table 4

PART	DESCRIPTION
S	START condition
SLAVE ADDRESS	1000 100X or 1000 110X; note 1
ACK	acknowledge, generated by the slave
SUBADDRESS; note 2	subaddress byte
DATA	data byte
--------	continued data bytes and ACKs
P	STOP condition

Notes

1. X is the read/write control bit; X = logic 0 is order to write; X = logic 1 is order to read.
2. If more than 1 byte DATA is transmitted, then auto-increment of the subaddress is performed.

7.13 Slave receiver

Table 6 Subaddress 26H

BIT	SYMBOL	DESCRIPTION
7	WSS7	Wide screen signalling bits: enhanced services field.
6	WSS6	
5	WSS5	
4	WSS4	
3	WSS3	Wide screen signalling bits: aspect ratio field.
2	WSS2	
1	WSS1	
0	WSS0	

Table 7 Subaddress 27H

BIT	SYMBOL	DESCRIPTION
7	WSSON	0 = wide screen signalling output is disabled; default state after reset 1 = wide screen signalling output is enabled
6	–	This bit is reserved and must be set to logic 0.
5	WSS13	Wide screen signalling bits: reserved field.
4	WSS12	
3	WSS11	
2	WSS10	Wide screen signalling bits: subtitles field.
1	WSS9	
0	WSS8	

Table 8 Subaddress 28H

BIT	SYMBOL	DESCRIPTION
7	DECCOL	0 = disable colour detection bit of RTCI input 1 = enable colour detection bit of RTCI input; bit RTCE must be set to logic 1 (see Fig.22)
6	DECFIS	0 = field sequence as FISE in subaddress 61 1 = field sequence as FISE bit in RTCI input; bit RTCE must be set to logic 1 (see Fig.22)
5	BS5	starting point of burst in clock cycles PAL: BS[5:0] = 33 (21H); default value after reset NTSC: BS[5:0] = 25 (19H)
4	BS4	
3	BS3	
2	BS2	
1	BS1	
0	BS0	

Table 9 Subaddress 29H

BIT	SYMBOL	DESCRIPTION
7	–	These 2 bits are reserved; each must be set to logic 0.
6	–	
5	BE5	ending point of burst in clock cycles PAL: BE[5:0] = 29 (1DH); default value after reset NTSC: BE[5:0] = 29 (1DH)
4	BE4	
3	BE3	
2	BE2	
1	BE1	
0	BE0	

Table 10 Subaddress 2AH

BIT	SYMBOL	DESCRIPTION
7 to 0	CG[07:00]	LSB of the byte is encoded immediately after run-in, the MSB of the byte has to carry the CRCC bit, in accordance with the definition of copy generation management system encoding format.

Table 11 Subaddress 2BH

BIT	SYMBOL	DESCRIPTION
7 to 0	CG[15:08]	Second byte; the MSB of the byte has to carry the CRCC bit, in accordance with the definition of copy generation management system encoding format.

Table 12 Subaddress 2CH

BIT	SYMBOL	DESCRIPTION
7	CGEN	0 = copy generation data output is disabled; default state after reset 1 = copy generation data output is enabled
6	–	These 3 bits are reserved; each must be set to logic 0.
5	–	
4	–	
3	CG19	Remaining bits of copy generation code.
2	CG18	
1	CG17	
0	CG16	

Table 13 Subaddress 2DH

BIT	SYMBOL	DESCRIPTION
7	CVBSEN1	0 = luminance output signal is switched to Y DAC; default state after reset 1 = CVBS output signal is switched to Y DAC
6	CVBSEN0	0 = chrominance output signal is switched to C DAC; default state after reset 1 = CVBS output signal is switched to C DAC
5	CVBSTRI	0 = DAC for CVBS output in 3-state mode (high-impedance) 1 = DAC for CVBS output in normal operation mode; default state after reset
4	YTRI	0 = DAC for Y output in 3-state mode (high-impedance) 1 = DAC for Y output in normal operation mode; default state after reset
3	CTRI	0 = DAC for C output in 3-state mode (high-impedance) 1 = DAC for C output in normal operation mode; default state after reset
2	RTRI	0 = DAC for RED output in 3-state mode (high-impedance) 1 = DAC for RED output in normal operation mode; default state after reset
1	GTRI	0 = DAC for GREEN output in 3-state mode (high-impedance) 1 = DAC for GREEN output in normal operation mode; default state after reset
0	BTRI	0 = DAC for BLUE output in 3-state mode (high-impedance) 1 = DAC for BLUE output in normal operation mode; default state after reset

Table 14 Subaddress 38H

BIT	SYMBOL	DESCRIPTION
7 to 5	–	These 3 bits are reserved; each must be set to logic 0.
4 to 0	GY[4:0]	Gain luminance of RGB (C_R, Y and C_B) output, ranging from $(1 - {}^{16}/_{32})$ to $(1 + {}^{15}/_{32})$. Suggested nominal value = –6 (11010b), depending on external application.

Table 15 Subaddress 39H

BIT	SYMBOL	DESCRIPTION
7 to 5	–	These 3 bits are reserved; each must be set to logic 0.
4 to 0	GCD[4:0]	Gain colour difference of RGB (C_R, Y and C_B) output, ranging from $(1 - {}^{16}/_{32})$ to $(1 + {}^{15}/_{32})$. Suggested nominal value = –6 (11010b), depending on external application.

Table 16 Subaddress 3AH

BIT	SYMBOL	DESCRIPTION
7	CBENB	0 = data from input ports is encoded; default state after reset 1 = colour bar with fixed colours is encoded
6	–	These 2 bits are reserved; each must be set to a logic 0.
5	–	
4	SYMP	0 = horizontal and vertical trigger is taken from RCV2 and RCV1 respectively; default state after reset 1 = horizontal and vertical trigger is decoded out of *"ITU-R BT.656"* compatible data at MPEG port
3	DEMOFF	0 = YC_BC_R-to-RGB dematrix is active; default state after reset 1 = YC_BC_R-to-RGB dematrix is bypassed
2	CSYNC	0 = CVBS output signal is switched to CVBS DAC; default state after reset 1 = advanced composite sync is switched to CVBS DAC
1	MP2C	0 = input data is twos complement from MPEG port fader input 1 = input data is straight binary from MPEG port fader input; default state after reset
0	VP2C	0 = input data is twos complement from Video port fader input 1 = input data is straight binary from Video port fader input; default state after reset

Table 17 Subaddresses 42H to 44H and 48H to 4AH

ADDRESS	BYTE	DESCRIPTION
42H 48H	KEY1LU KEY1UU	Key colour 1 lower and upper limits for U, V and Y. If MPEG input signal is within the limits of key colour 1 the incoming signals at the Video port and MPEG port are added together according to the equation: FADE1 × video signal + (1 – FADE1) × MPEG signal Default value of all bytes after reset = 80H.
43H 49H	KEY1LV KEY1UV	
44H 4AH	KEY1LY KEY1UY	

Table 18 Subaddresses 45H to 47H and 4BH to 4DH

ADDRESS	BYTE	DESCRIPTION
45H 4BH	KEY2LU KEY2UU	Key colour 2 lower and upper limits for U, V and Y. If MPEG input signal is within the limits of key colour 2 the incoming signals at the Video port and MPEG port are added together according to the equation: FADE2 × video signal + (1 – FADE2) × LUT values Default value of all bytes after reset = 80H.
46H 4CH	KEY2LV KEY2UV	
47H 4DH	KEY2LY KEY2UY	

Table 19 Subaddress 4EH

BIT	SYMBOL	DESCRIPTION
7 to 6	–	These 2 bits are reserved; each must be set to logic 0.
5 to 0	FADE1[5:0]	These 6 bits form factor FADE1 which determines the ratio between the MPEG and video input signal in the resulting video data stream if the key colour 1 is detected in the MPEG input signal. FADE1 = 00H: 100% MPEG, 0% video FADE1 = 3FH: 100% video, 0% MPEG; this is the default value after reset

Table 20 Subaddress 4FH

BIT	SYMBOL	DESCRIPTION
7	CFADEM	0 = fader operates in normal mode; default state after reset 1 = the entire video input stream is faded with the colour stored in the LUT (subaddresses 51H to 53H) regardless of the MPEG input signal. The colour keys are disabled.
6	CFADEV	0 = fader operates in normal mode; default state after reset 1 = the entire MPEG input stream is faded with the colour stored in the LUT (subaddresses 51H to 53H) regardless of the video input signal. The colour keys are disabled.
5 to 0	FADE2[5:0]	These 6 bits form factor FADE2 which determines the ratio between the LUT colour values (subaddresses 51H to 53H) and the video input signal in the resulting video data stream if the key colour 2 is detected in the MPEG input signal. FADE2 = 00H: 100% LUT colour, 0% video FADE2 = 3FH: 100% video, 0% LUT colour; this is the default value after reset

Table 21 Subaddress 50H

BIT	SYMBOL	DESCRIPTION
7 to 6	–	These 2 bits are reserved; each must be a logic 0.
5 to 0	FADE3[5:0]	These 6 bits form factor FADE3 which determines the ratio between the MPEG and video input signal in the resulting video data stream if neither the key colour 1 nor the key colour 2 is detected in the MPEG input signal. FADE3 = 00H: 100% MPEG, 0% video FADE3 = 3FH: 100% video, 0% MPEG; this is the default value after reset

Table 22 Subaddress 51H

BIT	SYMBOL	DESCRIPTION
7 to 0	LUTU[7:0]	LUT for the colour values inserted in case of key colour 2 U detection in the MPEG input data stream. LUTU[7:0] = 80H; default value after reset

Table 23 Subaddress 52H

BIT	SYMBOL	DESCRIPTION
7 to 0	LUTV[7:0]	LUT for the colour values inserted in case of key colour 2 V detection in the MPEG input data stream. LUTV[7:0] = 80H; default value after reset

Table 24 Subaddress 53H

BIT	SYMBOL	DESCRIPTION
7 to 0	LUTY[7:0]	LUT for the colour values inserted in case of key colour 2 Y detection in the MPEG input data stream. LUTY[7:0] = 80H; default value after reset

Table 25 Subaddress 54H

BIT	SYMBOL	DESCRIPTION
7	VPSEN	0 = video programming system data insertion is disabled; default state after reset 1 = video programming system data insertion in line 16 is enabled
6	–	This bit is not used and should be set to logic 0.
5	ENCIN	0 = encoder path is fed with MP_B input data; fader is bypassed; default state after reset 1 = encoder path is fed with output signal of fader; see Section 7.1
4	RGBIN	0 = RGB path is fed with MP_B input data; fader is bypassed; default state after reset 1 = RGB path is fed with output signal of fader; see Section 7.1
3	DELIN	0 = not supported in current version; do not use 1 = recommended value; default state after reset
2	VPSEL	0 = not supported in current version; do not use 1 = recommended value; default state after reset
1	EDGE2	0 = MP_B data is sampled on the rising clock edge; default state after reset 1 = MP_B data is sampled on the falling clock edge
0	EDGE1	0 = MP_A data is sampled on the rising clock edge; default state after reset 1 = MP_A data is sampled on the falling clock edge

Table 26 Subaddress 55H

BIT	SYMBOL	DESCRIPTION
7 to 0	VPS5[7:0]	Fifth byte of video programming system data in line 16; LSB first.

Table 27 Subaddress 56H

BIT	SYMBOL	DESCRIPTION
7 to 0	VPS11[7:0]	Eleventh byte of video programming system data in line 16; LSB first.

Table 28 Subaddress 57H

BIT	SYMBOL	DESCRIPTION
7 to 0	VPS12[7:0]	Twelfth byte of video programming system data in line 16; LSB first.

Table 29 Subaddress 58H

BIT	SYMBOL	DESCRIPTION
7 to 0	VPS13[7:0]	Thirteenth byte of video programming system data in line 16; LSB first.

Table 30 Subaddress 59H

BIT	SYMBOL	DESCRIPTION
7 to 0	VPS14[7:0]	Fourteenth byte of video programming system data in line 16; LSB first.

Table 31 Subaddress 5AH

BIT	SYMBOL	DESCRIPTION
7 to 0	CHPS[7:0]	Phase of encoded colour subcarrier (including burst) relative to horizontal sync; can be adjusted in steps of 360/256 degrees. 0FH = PAL-B/G and data from input ports 3AH = PAL-B/G and data from look-up table 35H = NTSC-M and data from input ports 57H = NTSC-M and data from look-up table

Table 32 Subaddress 5BH

BIT	SYMBOL	DESCRIPTION
7 to 0	GAINU[7:0]	These are the 8 LSBs of the 9-bit code that selects the variable gain for the C_B signal; input representation in accordance with *"ITU-R BT.601"*; see Table 33. The MSB is held in subaddress 5DH; see Table 36.

Table 33 GAINU values

CONDITIONS(1)	ENCODING
white-to-black = 92.5 IRE	GAINU = −2.17 × nominal to +2.16 × nominal
GAINU[8:0] = 0	output subcarrier of U contribution = 0
GAINU[8:0] = 118 (76H)	output subcarrier of U contribution = nominal
white-to-black = 100 IRE	GAINU = −2.05 × nominal to +2.04 × nominal
GAINU[8:0] = 0	output subcarrier of U contribution = 0
GAINU[8:0] = 125 (7DH)	output subcarrier of U contribution = nominal
GAINU[8:0] = 106 (6AH)	nominal GAINU for SECAM encoding

Note

1. All IRE values are rounded up.

Table 34 Subaddress 5CH

BIT	SYMBOL	DESCRIPTION
7 to 0	GAINV[7:0]	These are the 8 LSBs of the 9-bit code that selects the variable gain for the C_R signal; input representation in accordance with *"ITU-R BT.601"*; see Table 35. The MSB is held in subaddress 5EH; see Table 38.

Table 35 GAINV values

CONDITIONS(1)	ENCODING
white-to-black = 92.5 IRE	GAINV = −1.55 × nominal to +1.55 × nominal
GAINV[8:0] = 0	output subcarrier of V contribution = 0
GAINV[8:0] = 165 (A5H)	output subcarrier of V contribution = nominal
white-to-black = 100 IRE	GAINV = −1.46 × nominal to +1.46 × nominal
GAINV[8:0] = 0	output subcarrier of V contribution = 0
GAINV[8:0] = 175 (AFH)	output subcarrier of V contribution = nominal
GAINV[8:0] = 129 (81H)	nominal GAINV for SECAM encoding

Note

1. All IRE values are rounded up.

Table 36 Subaddress 5DH

BIT	SYMBOL	DESCRIPTION
7	GAINU8	MSB of the 9-bit code that sets the variable gain for the C_B signal; see Table 32.
6	DECOE	real-time control: 0 = disable odd/even field control bit from RTCI 1 = enable odd/even field control bit from RTCI (see Fig.22)
5 to 0	BLCKL[5:0]	variable black level; input representation in accordance with *"ITU-R BT.601"*; see Table 37

Table 37 BLCKL values

CONDITIONS(1)	ENCODING(1)
white-to-sync = 140 IRE; note 2	recommended value: BLCKL = 58 (3AH)
BLCKL = 0; note 2	output black level = 29 IRE
BLCKL = 63 (3FH); note 2	output black level = 49 IRE
white-to-sync = 143 IRE; note 3	recommended value: BLCKL = 51 (33H)
BLCKL = 0; note 3	output black level = 27 IRE
BLCKL = 63 (3FH); note 3	output black level = 47 IRE

Notes

1. All IRE values are rounded up.
2. Output black level/IRE = BLCKL $\times$ 2/6.29 + 28.9.
3. Output black level/IRE = BLCKL $\times$ 2/6.18 + 26.5.

Table 38 Subaddress 5EH

BIT	SYMBOL	DESCRIPTION
7	GAINV8	MSB of the 9-bit code that sets the variable gain for the C_R signal; see Table 34.
6	DECPH	real-time control: 0 = disable subcarrier phase reset bit from RTCI 1 = enable subcarrier phase reset bit from RTCI (see Fig.22)
5 to 0	BLNNL[5:0]	variable blanking level; see Table 39

Table 39 BLNNL values

CONDITIONS[1]	ENCODING[1]
white-to-sync = 140 IRE; note 2	recommended value: BLNNL = 46 (2EH)
BLNNL = 0; note 2	output blanking level = 25 IRE
BLNNL = 63 (3FH); note 2	output blanking level = 45 IRE
white-to-sync = 143 IRE; note 3	recommended value: BLNNL = 53 (35H)
BLNNL = 0; note 3	output blanking level = 26 IRE
BLNNL = 63 (3FH); note 3	output blanking level = 46 IRE

Notes

1. All IRE values are rounded up.
2. Output black level/IRE = BLNNL × 2/6.29 + 25.4.
3. Output black level/IRE = BLNNL × 2/6.18 + 25.9; default after reset: 35H.

Table 40 Subaddress 5FH

BIT	SYMBOL	DESCRIPTION
7	CCRS1	These 2 bits select the cross-colour reduction filter in luminance; see Table 41 and Fig.10.
6	CCRS0	
5	BLNVB5	These 6 bits select the variable blanking level during vertical blanking interval is typically identical to value of BLNNL.
4	BLNVB4	
3	BLNVB3	
2	BLNVB2	
1	BLNVB1	
0	BLNVB0	

Table 41 Selection of cross-colour reduction filter

CCRS1	CCRS0	DESCRIPTION
0	0	no cross-colour reduction
0	1	cross-colour reduction #1 active
1	0	cross-colour reduction #2 active
1	1	cross-colour reduction #3 active

Table 42 Subaddress 61H

BIT	SYMBOL	DESCRIPTION
7	DOWNB	0 = DACs for R, G and B in normal operational mode 1 = DACs for R, G and B forced to lowest output voltage; default state after reset
6	DOWNA	0 = DACs for CVBS, Y and C in normal operational mode; default state after reset 1 = DACs for CVBS, Y and C forced to lowest output voltage
5	INPI	0 = PAL switch phase is nominal; default state after reset 1 = PAL switch phase is inverted compared to nominal if RTC is enabled; see Table 43
4	YGS	0 = luminance gain for white – black 100 IRE; default state after reset 1 = luminance gain for white – black 92.5 IRE including 7.5 IRE set-up of black
3	SECAM	0 = no SECAM encoding; default state after reset 1 = SECAM encoding activated; bit PAL has to be set to logic 0
2	SCBW	0 = enlarged bandwidth for chrominance encoding (for overall transfer characteristic of chrominance in baseband representation see Figs 8 and 9) 1 = standard bandwidth for chrominance encoding (for overall transfer characteristic of chrominance in baseband representation see Figs 8 and 9); default state after reset
1	PAL	0 = NTSC encoding (non-alternating V component) 1 = PAL encoding (alternating V component); default state after reset
0	FISE	0 = 864 total pixel clocks per line; default state after reset 1 = 858 total pixel clocks per line

Table 43 Subaddress 62H

BIT	SYMBOL	DESCRIPTION
7	RTCE	0 = no real-time control of generated subcarrier frequency; default state after reset 1 = real-time control of generated subcarrier frequency through SAF7113 or SAF7118; for timing see Fig.22
6 to 0	BSTA[6:0]	amplitude of colour burst; input representation in accordance with *“ITU-R BT.601”*; see Table 44

Table 44 BSTA values

CONDITIONS[1]	ENCODING
white-to-black = 92.5 IRE; burst = 40 IRE; NTSC encoding BSTA = 0 to 2.02 × nominal	recommended value: BSTA = 63 (3FH)
white-to-black = 92.5 IRE; burst = 40 IRE; PAL encoding BSTA = 0 to 2.82 × nominal	recommended value: BSTA = 45 (2DH)
white-to-black = 100 IRE; burst = 43 IRE; NTSC encoding BSTA = 0 to 1.90 × nominal	recommended value: BSTA = 67 (43H)
white-to-black = 100 IRE; burst = 43 IRE; PAL encoding BSTA = 0 to 3.02 × nominal	recommended value: BSTA = 47 (2FH); default value after reset
fixed burst amplitude with SECAM encoding	

Note

1. All IRE values are rounded up.

Table 45 Subaddresses 63H to 66H

ADDRESS	BYTE	DESCRIPTION
63H	FSC[07:00]	These 4 bytes are used to program the subcarrier frequency. FSC[31:24] is the most significant byte, FSC[07:00] is the least significant byte. f_{sc} = subcarrier frequency (in multiples of line frequency) f_{llc} = clock frequency (in multiples of line frequency) $FSC = \text{round}\left(\frac{f_{sc}}{f_{llc}} \times 2^{32}\right)$; note 1
64H	FSC[15:08]	
65H	FSC[23:16]	
66H	FSC[31:24]	

Note

1. Examples:
   a) NTSC-M: f_{sc} = 227.5, f_{llc} = 1716 → FSC = 569408543 (21F07C1FH).
   b) PAL-B/G: f_{sc} = 283.7516, f_{llc} = 1728 → FSC = 705268427 (2A098ACBH).
   c) SECAM: f_{sc} = 274.304, f_{llc} = 1728 → FSC = 681786290 (28A33BB2H).

Table 46 Subaddress 67H

BIT	SYMBOL	DESCRIPTION
7 to 0	L21O[07:00]	First byte of captioning data, odd field. LSB of the byte is encoded immediately after run-in and framing code, the MSB of the byte has to carry the parity bit, in accordance with the definition of line 21 encoding format.

Table 47 Subaddress 68H

BIT	SYMBOL	DESCRIPTION
7 to 0	L21O[17:10]	Second byte of captioning data, odd field. The MSB of the byte has to carry the parity bit, in accordance with the definition of line 21 encoding format.

Table 48 Subaddress 69H

BIT	SYMBOL	DESCRIPTION
7 to 0	L21E[07:00]	First byte of extended data, even field. LSB of the byte is encoded immediately after run-in and framing code, the MSB of the byte has to carry the parity bit, in accordance with the definition of line 21 encoding format.

Table 49 Subaddress 6AH

BIT	SYMBOL	DESCRIPTION
7 to 0	L21E[17:10]	Second byte of extended data, even field. The MSB of the byte has to carry the parity bit, in accordance with the definition of line 21 encoding format.

Table 50 Subaddress 6BH

BIT	SYMBOL	DESCRIPTION
7	SRCV11	These 2 bits define signal type on pin RCV1; see Table 51
6	SRCV10	
5	TRCV2	0 = horizontal synchronization is taken from RCV1 port (at bit SYMP = LOW) or from decoded frame sync of *"ITU-R BT.656"* input (at bit SYMP = HIGH); default state after reset 1 = horizontal synchronization is taken from RCV2 port (at bit SYMP = LOW)
4	ORCV1	0 = pin RCV1 is switched to input; default state after reset 1 = pin RCV1 is switched to output
3	PRCV1	0 = polarity of RCV1 as output is active HIGH, rising edge is taken when input; default state after reset 1 = polarity of RCV1 as output is active LOW, falling edge is taken when input
2	CBLF	When CBLF = 0. If ORCV2 = 1, pin RCV2 provides an HREF signal (horizontal reference pulse that is defined by RCV2S and RCV2E, also during vertical blanking interval); default state after reset. If ORCV2 = 0 and bit SYMP = 0, signal input to RCV2 is used for horizontal synchronization only (if TRCV2 = 1); default state after reset. When CBLF = 1. If ORCV2 = 1, pin RCV2 provides a 'composite-blanking-not' signal, for example a reference pulse that is defined by RCV2S and RCV2E, excluding vertical blanking interval, which is defined by FAL and LAL. If ORCV2 = 0 and bit SYMP = 0, signal input to RCV2 is used for horizontal synchronization (if TRCV2 = 1) and as an internal blanking signal.
1	ORCV2	0 = pin RCV2 is switched to input; default state after reset 1 = pin RCV2 is switched to output
0	PRCV2	0 = polarity of RCV2 as output is active HIGH, rising edge is taken when input, respectively; default state after reset 1 = polarity of RCV2 as output is active LOW, falling edge is taken when input, respectively

Table 51 Selection of the signal type on pin RCV1

SRCV11	SRCV10	RCV1	FUNCTION
0	0	VS	Vertical Sync each field; default state after reset
0	1	FS	Frame Sync (odd/even)
1	0	FSEQ	Field Sequence, vertical sync every fourth field (PAL = 0), eighth field (PAL = 1) or twelfth field (SECAM = 1)
1	1	–	not applicable

Table 52 Subaddress 6CH

BIT	SYMBOL	DESCRIPTION
7 to 0	HTRIG[7:0]	These are the 8 LSBs of the 11-bit code that sets the horizontal trigger phase related to the signal on RCV1 or RCV2 input. The 3 MSBs are held in subaddress 6DH; see Table 53. Values above 1715 (FISE = 1) or 1727 (FISE = 0) are not allowed. Increasing HTRIG[10:0] decreases delays of all internally generated timing signals. Reference mark: analog output horizontal sync (leading slope) coincides with active edge of RCV used for triggering at HTRIG[10:0] = 4FH (79).

Table 53 Subaddress 6DH

BIT	SYMBOL	DESCRIPTION
7	HTRIG10	These are the 3 MSBs of the horizontal trigger phase code; see Table 52.
6	HTRIG9	
5	HTRIG8	
4	VTRIG4	Sets the vertical trigger phase related to signal on RCV1 input. Increasing VTRIG decreases delays of all internally generated timing signals, measured in half lines; variation range of VTRIG[4:0] = 0 to 31 (1FH).
3	VTRIG3	
2	VTRIG2	
1	VTRIG1	
0	VTRIG0	

Table 54 Subaddress 6EH

BIT	SYMBOL	DESCRIPTION
7	SBLBN	0 = vertical blanking is defined by programming of FAL and LAL; default state after reset 1 = vertical blanking is forced in accordance with *"ITU-R BT.624"* (50 Hz) or RS170A (60 Hz)
6	BLCKON	0 = encoder in normal operation mode 1 = output signal is forced to blanking level; default state after reset
5	PHRES1	These 2 bits select the phase reset mode of the colour subcarrier generator; see Table 55.
4	PHRES0	
3	LDEL1	These 2 bits select the delay on luminance path with reference to chrominance path; see Table 56.
2	LDEL0	
1	FLC1	These 2 bits select field length control; see Table 57.
0	FLC0	

Table 55 Selection of phase reset mode

PHRES1	PHRES0	DESCRIPTION
0	0	no reset or reset via RTCI from SAF7113 or SAF7118 if bit RTCE = 1; default value after reset
0	1	reset every two lines or SECAM specific if bit SECAM = 1
1	0	reset every eight fields
1	1	reset every four fields

Table 56 Selection of luminance path delay

LDEL1	LDEL0	LUMINANCE PATH DELAY
0	0	no luminance delay; default value after reset
0	1	1 LLC luminance delay
1	0	2 LLC luminance delay
1	1	3 LLC luminance delay

Table 57 Selection of field length control

FLC1	FLC0	DESCRIPTION
0	0	interlaced 312.5 lines/field at 50 Hz, 262.5 lines/field at 60 Hz; default value after reset
0	1	non-interlaced 312 lines/field at 50 Hz, 262 lines/field at 60 Hz
1	0	non-interlaced 313 lines/field at 50 Hz, 263 lines/field at 60 Hz
1	1	non-interlaced 313 lines/field at 50 Hz, 263 lines/field at 60 Hz

Table 58 Subaddress 6FH

BIT	SYMBOL	DESCRIPTION
7	CCEN1	These 2 bits enable individual line 21 encoding; see Table 59.
6	CCEN0	
5	TTXEN	0 = disables teletext insertion; default state after reset 1 = enables teletext insertion
4	SCCLN4	These 5 bits select the actual line where closed caption or extended data are encoded. line = (SCCLN[4:0] + 4) for M-systems line = (SCCLN[4:0] + 1) for other systems
3	SCCLN3	
2	SCCLN2	
1	SCCLN1	
0	SCCLN0	

Table 59 Selection of line 21 encoding

CCEN1	CCEN0	LINE 21 ENCODING
0	0	line 21 encoding off; default value after reset
0	1	enables encoding in field 1 (odd)
1	0	enables encoding in field 2 (even)
1	1	enables encoding in both fields

Table 60 Subaddress 70H

BIT	SYMBOL	DESCRIPTION
7 to 0	RCV2S[7:0]	These are the 8 LSBs of the 11-bit code that determines the start of the output signal on the RCV2 pin; the 3 MSBs of the 11-bit code are held at subaddress 72H; see Table 62. Values above 1715 (FISE = 1) or 1727 (FISE = 0) are not allowed. Leading sync slope at CVBS output coincides with leading slope of RCV2 out at RCV2S = 49H.

Table 61 Subaddress 71H

BIT	SYMBOL	DESCRIPTION
7 to 0	RCV2E[7:0]	These are the 8 LSBs of the 11-bit code that determines the end of the output signal on the RCV2 pin; the 3 MSBs of the 11-bit code are held at subaddress 72H; see Table 62. Values above 1715 (FISE = 1) or 1727 (FISE = 0) are not allowed. Leading sync slope at CVBS output coincides with trailing slope of RCV2 out at RCV2E = 49H.

Table 62 Subaddress 72H

BIT	SYMBOL	DESCRIPTION
7	–	This bit is reserved and must be set to a logic 0.
6	RCV2E10	These are the 3 MSBs of end of output signal code; see Table 61.
5	RCV2E9	
4	RCV2E8	
3	–	This bit is reserved and must be set to a logic 0.
2	RCV2S10	These are the 3 MSBs of start of output signal code; see Table 60.
1	RCV2S9	
0	RCV2S8	

Table 63 Subaddress 73H

BIT	SYMBOL	DESCRIPTION
7 to 0	TTXHS[7:0]	Start of signal on pin TTXRQ; see Fig.23. PAL: TTXHS[7:0] = 42H NTSC: TTXHS[7:0] = 54H

Table 64 Subaddress 74H

BIT	SYMBOL	DESCRIPTION
7 to 0	TTXHD[7:0]	Indicates the delay in clock cycles between rising edge of TTXRQ output and valid data at pin TTX. minimum value: TTXHD[7:0] = 2

Table 65 Subaddress 75H

BIT	SYMBOL	DESCRIPTION
7	CSYNCA4	Advanced composite sync against RGB output from 0 to 31 LLC clock periods.
6	CSYNCA3	
5	CSYNCA2	
4	CSYNCA1	
3	CSYNCA0	
2	VS_S2	Vertical sync shift between RCV1 and RCV2 (switched to output); in master mode it is possible to shift Hsync (RCV2; CBLF = 0) against Vsync (RCV1; SRCV1 = 00). standard value: VS_S[2:0] = 3
1	VS_S1	
0	VS_S0	

Table 66 Subaddress 76H

BIT	SYMBOL	DESCRIPTION	REMARKS
7 to 0	TTXOVS[7:0]	These are the 8 LSBs of the 9-bit code that determines the first line of occurrence of signal on pin TTXRQ in odd field. The MSB is held in subaddress 7CH; see Table 72. line = (TTXOVS[8:0] + 4) for M-systems line = (TTXOVS[8:0] + 1) for other systems	PAL: TTXOVS = 05H; NTSC: TTXOVS = 06H

Table 67 Subaddress 77H

BIT	SYMBOL	DESCRIPTION	REMARKS
7 to 0	TTXOVE[7:0]	These are the 8 LSBs of the 9-bit code that determines the last line of occurrence of signal on pin TTXRQ in odd field. The MSB is held in subaddress 7CH; see Table 72. last line = (TTXOVE[8:0] + 3) for M-systems last line = TTXOVE[8:0] for other systems	PAL: TTXOVE = 16H; NTSC: TTXOVE = 10H

Table 68 Subaddress 78H

BIT	SYMBOL	DESCRIPTION	REMARKS
7 to 0	TTXEVS[7:0]	These are the 8 LSBs of the 9-bit code that determines the first line of occurrence of signal on pin TTXRQ in even field. The MSB is held in subaddress 7CH; see Table 72. first line = (TTXEVS[8:0] + 4) for M-systems first line = (TTXEVS[8:0] + 1) for other systems	PAL: TTXEVS = 04H; NTSC: TTXEVS = 05H

Table 69 Subaddress 79H

BIT	SYMBOL	DESCRIPTION	REMARKS
7 to 0	TTXEVE[7:0]	These are the 8 LSBs of the 9-bit code that determines the last line of occurrence of signal on pin TTXRQ in even field. The MSB is held in subaddress 7CH; see Table 72. last line = (TTXEVE[8:0] + 3) for M-systems last line = TTXEVE[8:0] for other systems	PAL: TTXEVE = 16H; NTSC: TTXEVE = 10H

Table 70 Subaddress 7AH

BIT	SYMBOL	DESCRIPTION
7 to 0	FAL[7:0]	These are the 8 LSBs of the 9-bit code that determines the first active line. The MSB is held in subaddress 7CH; see Table 72. FAL[8:0] = 0 coincides with the first field synchronization pulse. first active line = (FAL[8:0] + 4) for M-systems first active line = (FAL[8:0] + 1) for other systems

Table 71 Subaddress 7BH

BIT	SYMBOL	DESCRIPTION
7 to 0	LAL[7:0]	These are the 8 LSBs of the 9-bit code that determines the last active line. The MSB is held in subaddress 7CH; see Table 72. LAL[8:0] = 0 coincides with the first field synchronization pulse. last active line = (LAL[8:0] + 3) for M-systems last active line = LAL[8:0] for other systems

Table 72 Subaddress 7CH

BIT	SYMBOL	DESCRIPTION
7	TTX60	0 = enables NABTS (FISE = 1) or European teletext (FISE = 0); default state after reset 1 = enables World Standard Teletext 60 Hz (FISE = 1)
6	LAL8	MSB of the last active line code; see Table 71.
5	TTXO	0 = new teletext protocol selected: at each rising edge of TTXRQ a single teletext bit is requested (see Fig.23); default state after reset 1 = old teletext protocol selected: the encoder provides a window of TTXRQ going HIGH; the length of the window depends on the chosen teletext standard (see Fig.23)
4	FAL8	MSB of the first active line code; see Table 70.
3	TTXEVE8	MSB of the 9-bit code that selects the last line of occurrence of signal on pin TTXRQ in even field; see Table 69.
2	TTXOVE8	MSB of the 9-bit code that selects the last line of occurrence of signal on pin TTXRQ in odd field; see Table 67.
1	TTXEVS8	MSB of the 9-bit code that selects the first line of occurrence of signal on pin TTXRQ in even field; see Table 68.
0	TTXOVS8	MSB of the 9-bit code that selects the first line of occurrence of signal on pin TTXRQ in odd field; see Table 66.

Table 73 Subaddress 7EH

BIT	SYMBOL	DESCRIPTION
7 to 0	LINE[12:5]	Individual lines in both fields (PAL counting) can be disabled for insertion of teletext by the respective LINE bits. Disabled line = LINEnn (50 Hz field rate). This bit mask is effective only, if the lines are enabled by TTXOVS/TTXOVE and TTXEVS/TTXEVE.

Table 74 Subaddress 7FH

BIT	SYMBOL	DESCRIPTION
7 to 0	LINE[20:13]	Individual lines in both fields (PAL counting) can be disabled for insertion of teletext by the respective LINE bits. Disabled line = LINEnn (50 Hz field rate). This bit mask is effective only, if the lines are enabled by TTXOVS/TTXOVE and TTXEVS/TTXEVE.

7.14 Slave transmitter

The slave transmitter slave address is 89H.

Table 75 Subaddress 00H

BIT	SYMBOL	DESCRIPTION
7	VER2	These 3 bits form the version identification number of the device: it will be changed with all versions of the IC that have different programming models; current version is 000 binary.
6	VER1	
5	VER0	
4	CCRDO	1 = closed caption bytes of the odd field have been encoded 0 = the bit is reset after information has been written to the subaddresses 67H and 68H; it is set immediately after the data has been encoded
3	CCRDE	1 = closed caption bytes of the even field have been encoded 0 = the bit is reset after information has been written to the subaddresses 69H and 6AH; it is set immediately after the data has been encoded
2	–	not used; set to logic 0
1	FSEQ	1 = during first field of a sequence (repetition rate: NTSC = 4 fields, PAL = 8 fields, SECAM = 12 fields) 0 = not first field of a sequence
0	O_E	1 = during even field 0 = during odd field

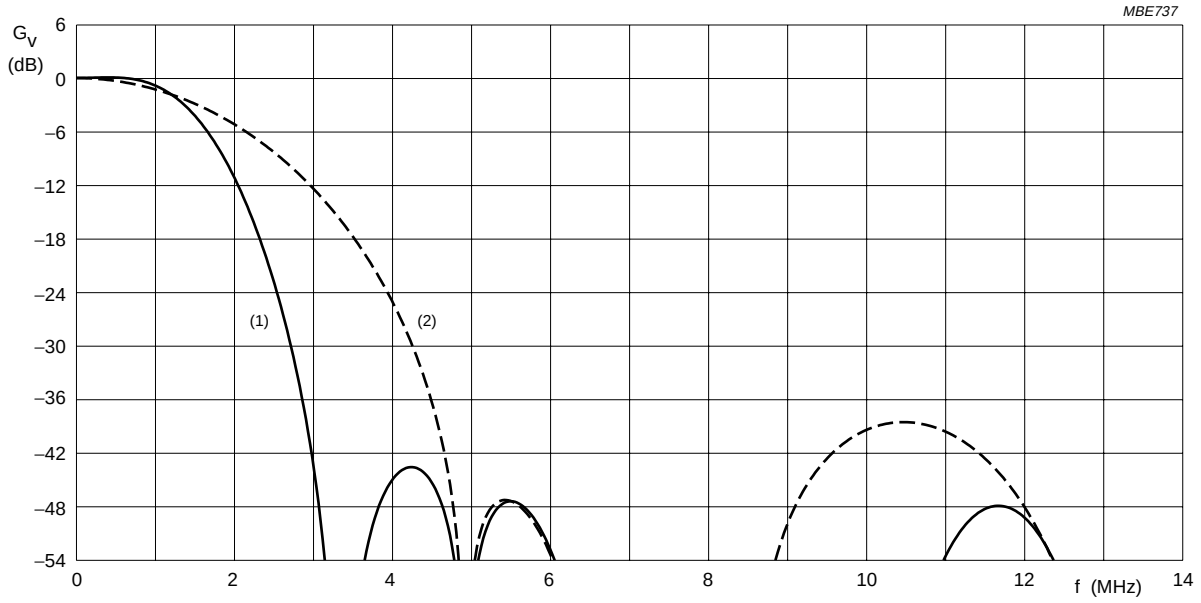

(1) SCBW = 1.
(2) SCBW = 0.

Fig.8 Chrominance transfer characteristic 1.

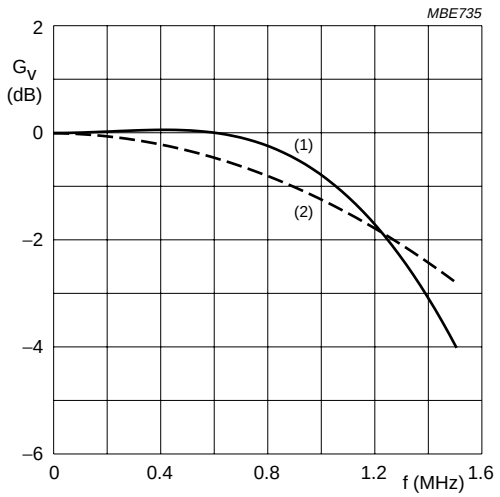

(1) SCBW = 1.
(2) SCBW = 0.

Fig.9 Chrominance transfer characteristic 2.

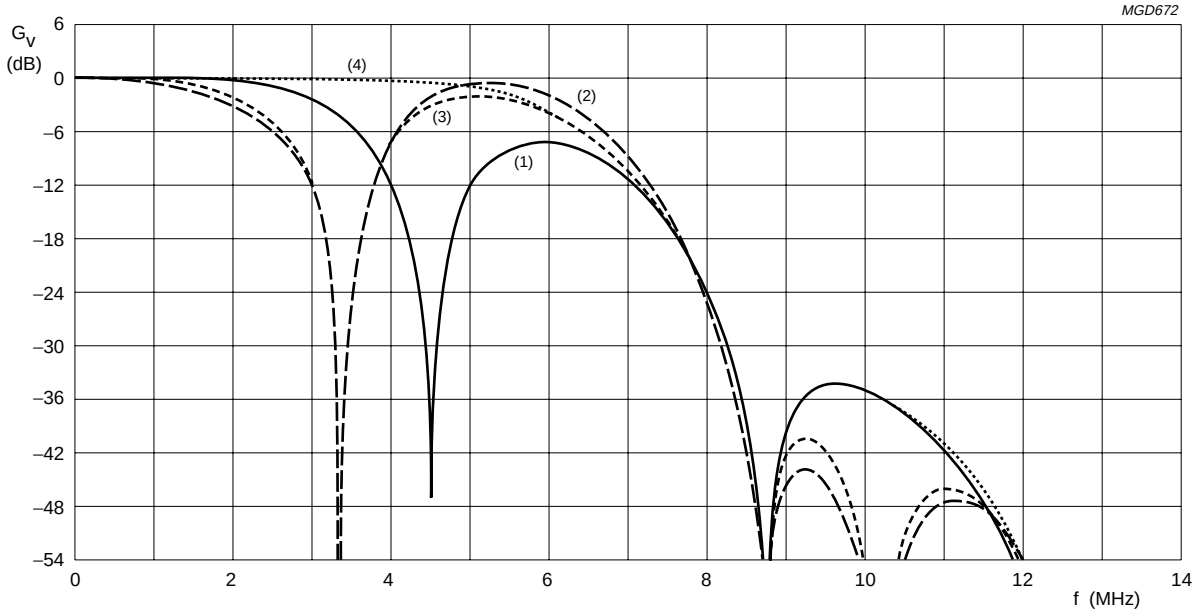

(1) CCRS1 = 0; CCRS0 = 1.
(2) CCRS1 = 1; CCRS0 = 0.
(3) CCRS1 = 1; CCRS0 = 1.
(4) CCRS1 = 0; CCRS0 = 0.

Fig.10 Luminance transfer characteristic 1.

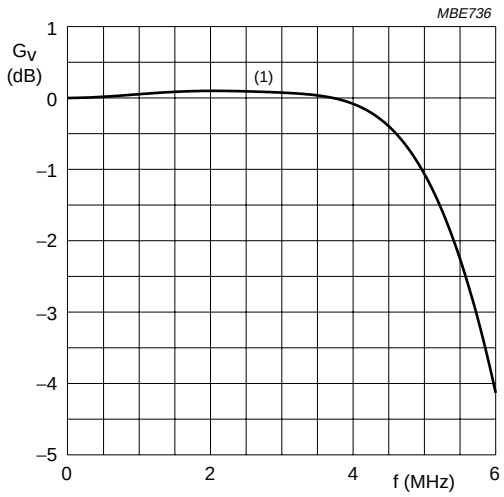

(1) CCRS1 = 0; CCRS0 = 0.

Fig.11 Luminance transfer characteristic 2.

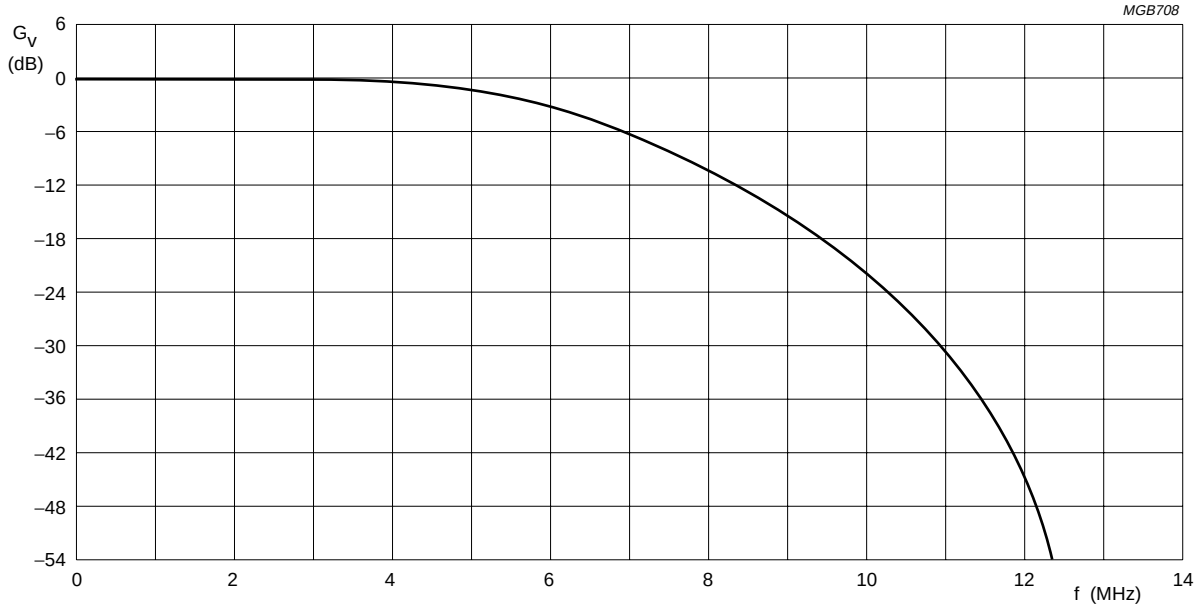

Fig.12 Luminance transfer characteristic in RGB.

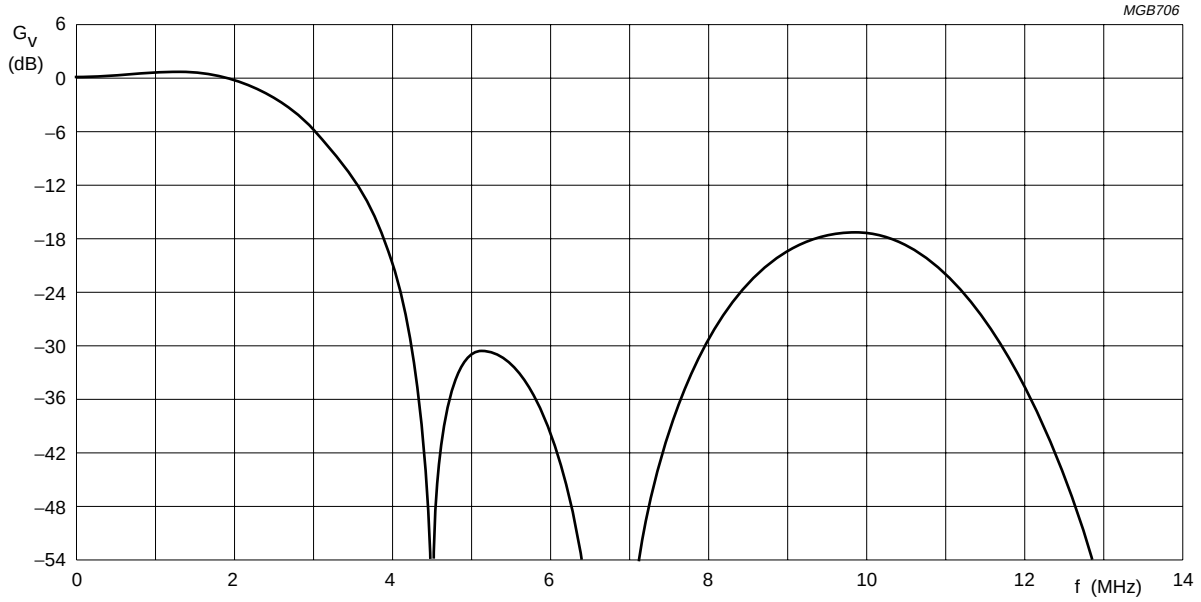

Fig.13 Colour difference transfer characteristic in RGB.

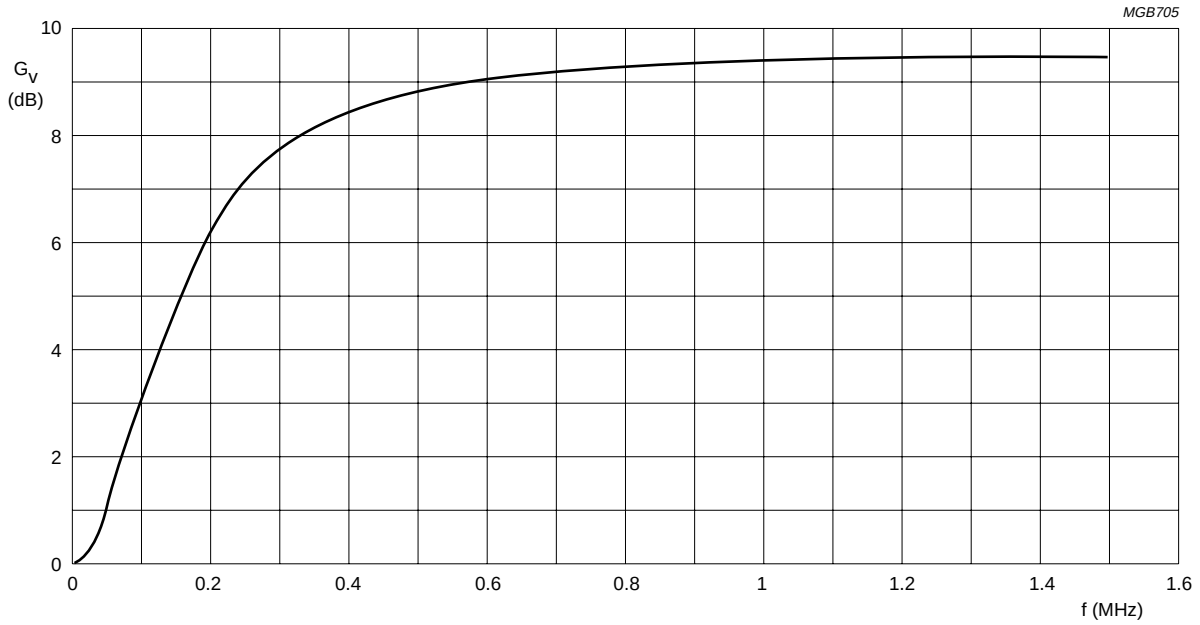

Fig.14 Gain of SECAM pre-emphasis.

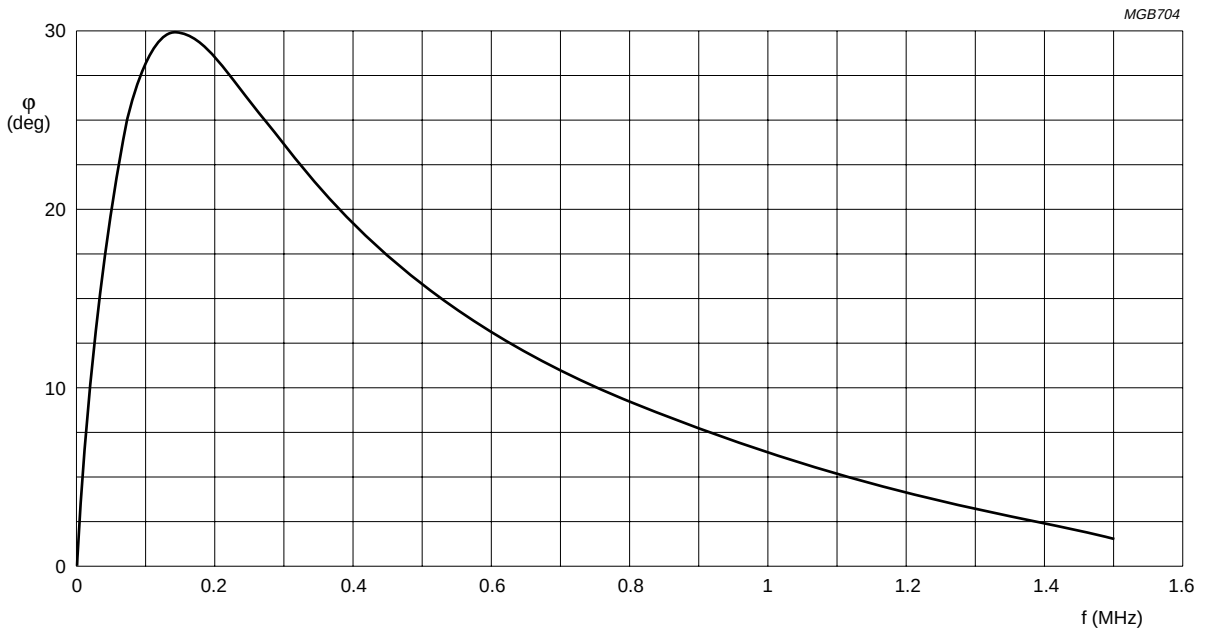

Fig.15 Phase of SECAM pre-emphasis.

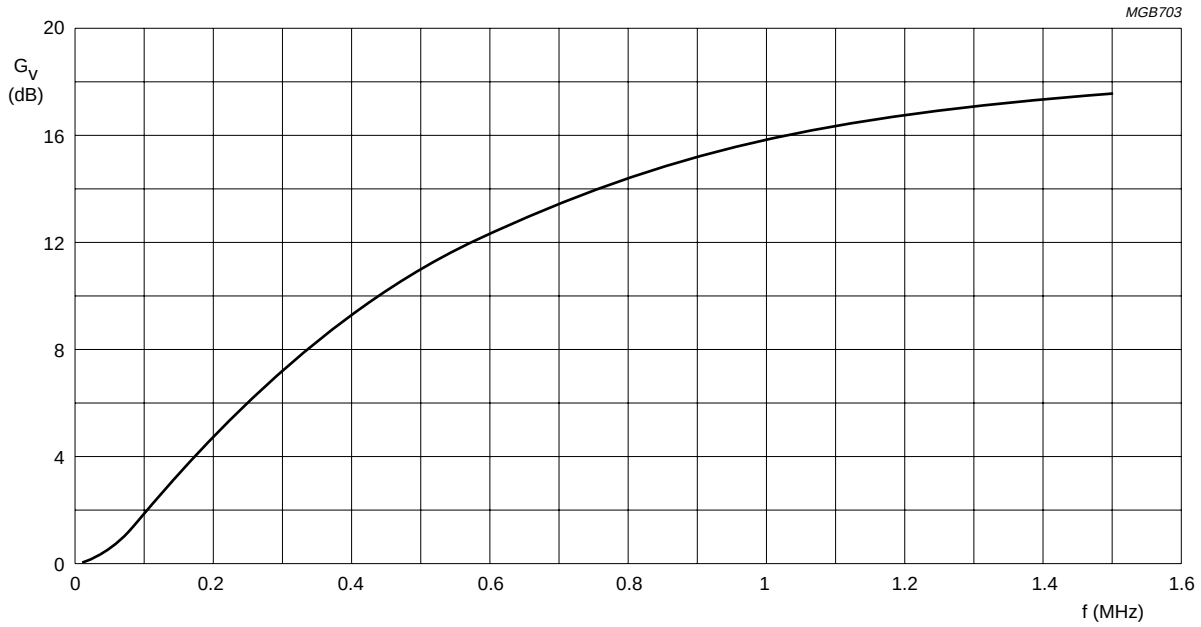

Fig.16 Gain of SECAM anti-Cloche.

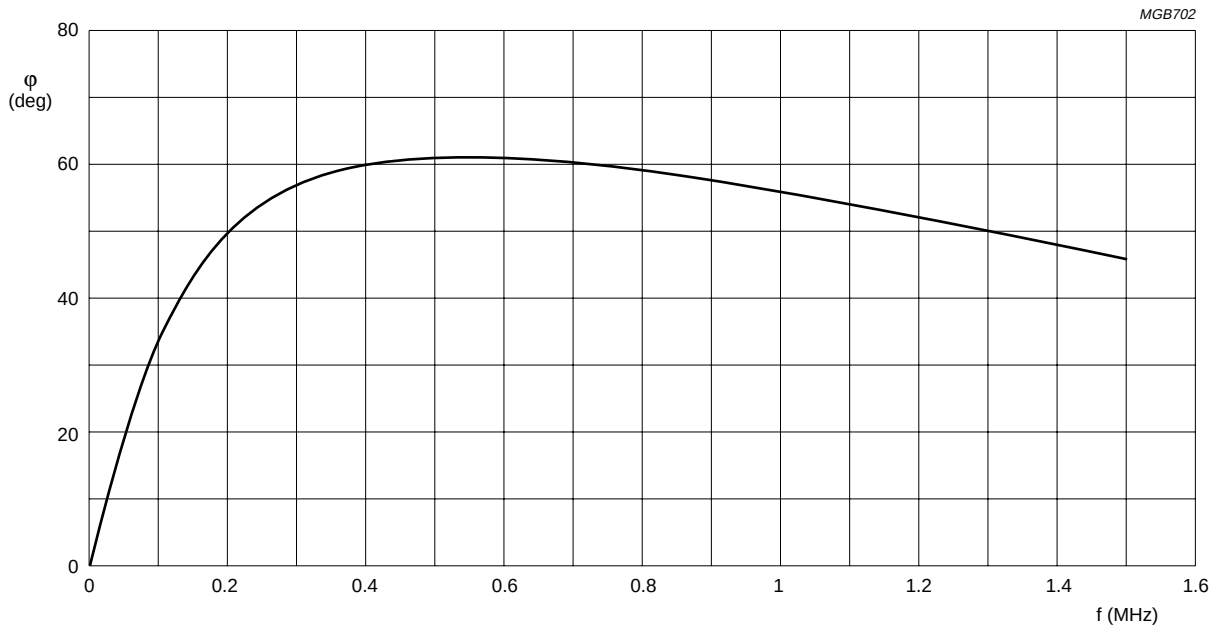

Fig.17 Phase of SECAM anti-Cloche.

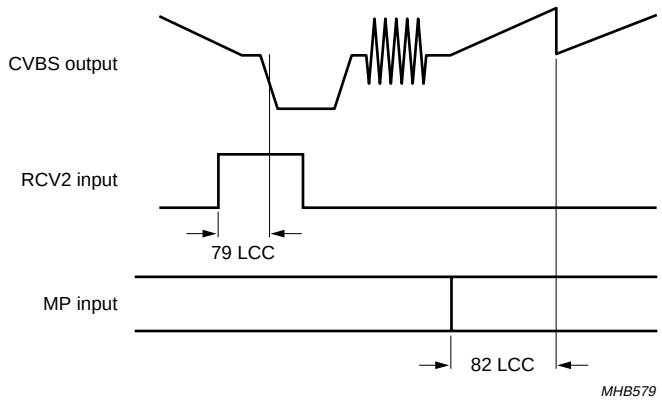

HTRIG = 0
PRCV2 = 0.
TRCV2 = 1.
ORCV2 = 0.

Fig.18 Sync and video input timing.

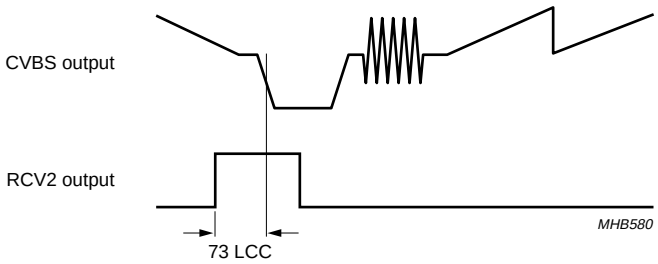

RCV2S = 0.
PRCV2 = 0.
ORCV2 = 1.

Fig.19 Sync and video output timing.

8 LIMITING VALUES

In accordance with the Absolute Maximum Rating System (IEC 60134); all ground pins connected together and grounded (0 V); all supply pins connected together.

SYMBOL	PARAMETER	CONDITIONS	MIN.	MAX.	UNIT
V_{DDD}	digital supply voltage		–0.5	+4.6	V
V_{DDA}	analog supply voltage		–0.5	+4.6	V
$V_{i(A)}$	input voltage at analog inputs		–0.5	+4.6	V
$V_{i(n)}$	input voltage at pins XTALI, SDA and SCL		–0.5	V_{DDD} + 0.5	V
$V_{i(D)}$	input voltage at digital inputs or I/O pins	outputs in 3-state	–0.5	+4.6	V
		outputs in 3-state; note 1	–0.5	+5.5	V
ΔV_{SS}	voltage difference between $V_{SSA(n)}$ and $V_{SSD(n)}$		–	100	mV
T_{stg}	storage temperature		–65	+150	°C
T_{amb}	ambient temperature		–40	+85	°C
V_{esd}	electrostatic discharge voltage	human body model; note 2	–	±2000	V
		machine model; note 3	–	±200	V

Notes

1. Condition for maximum voltage at digital inputs or I/O pins: 3.0 V < V_{DDD} < 3.6 V.
2. Class 2 according to EIA/JESD22-114-B.
3. Class B according to EIA/JESD22-115-A.

9 THERMAL CHARACTERISTICS

SYMBOL	PARAMETER	CONDITIONS	VALUE	UNIT
$R_{th(j-a)}$	thermal resistance from junction to ambient		47[1]	K/W

Note

1. The overall $R_{th(j-a)}$ value can vary depending on the board layout. To minimize the effective $R_{th(j-a)}$ all power and ground pins must be connected to the power and ground layers directly. An ample copper area direct under the SAF7129AH with a number of through-hole plating, which connect to the ground layer (four-layer board: second layer), can also reduce the effective $R_{th(j-a)}$. Please do not use any solder-stop varnish under the chip. In addition the usage of soldering glue with a high thermal conductance after curing is recommended.

10 CHARACTERISTICS

V_{DDD} = 3.0 to 3.6 V; T_{amb} = –40 to +85 °C; unless otherwise specified.

SYMBOL	PARAMETER	CONDITIONS	MIN.	TYP.	MAX.	UNIT
Supply						
V_{DDA}	analog supply voltage		3.15	–	3.45	V
V_{DDD}	digital supply voltage		3.0	–	3.6	V
I_{DDA}	analog supply current	note 1	–	180	190	mA
I_{DDD}	digital supply current	V_{DDD} = 3.3 V; note 1	–	40	55	mA
Inputs: LLC1, RCV1, RCV2, MP7 to MP0, RTCI, SA, $\overline{\text{RESET}}$ and TTX						
V_{IL}	LOW-level input voltage		–0.5	–	+0.8	V
V_{IH}	HIGH-level input voltage		2.0	–	V_{DDD} + 0.3	V
I_{LI}	input leakage current		–	–	1	μA
C_i	input capacitance	clocks	–	–	10	pF
		data	–	–	8	pF
		I/Os at high-impedance	–	–	8	pF
Outputs: RCV1, RCV2 and TTXRQ						
V_{OL}	LOW-level output voltage	I_{OL} = 2 mA	–	–	0.4	V
V_{OH}	HIGH-level output voltage	I_{OH} = –2 mA	2.4	–	–	V
I^2C-bus: SDA and SCL						
V_{IL}	LOW-level input voltage		–0.5	–	$+0.3V_{DD(I2C)}$	V
V_{IH}	HIGH-level input voltage		$0.7V_{DD(I2C)}$	–	$V_{DD(I2C)}$ + 0.3	V
I_i	input current	V_i = LOW or HIGH	–10	–	+10	μA
V_{OL}	LOW-level output voltage (pin SDA)	I_{OL} = 3 mA	–	–	0.4	V
I_o	output current	during acknowledge	3	–	–	mA
Clock timing: LLC1 and XCLK						
T_{LLC1}	cycle time	note 2	34	–	41	ns
δ	duty factor t_{HIGH}/T_{LLC1}	LLC1 input	40	–	60	%
δ	duty factor t_{HIGH}/T_{XCLK}	XCLK output typical 50%	40	–	60	%
t_r	rise time	note 2	–	–	5	ns
t_f	fall time	note 2	–	–	6	ns
Input timing: RCV1, RCV2, MP7 to MP0, RTCI, SA and TTX						
$t_{SU;DAT}$	input data set-up time		6	–	–	ns
$t_{HD;DAT}$	input data hold time		3	–	–	ns

SYMBOL	PARAMETER	CONDITIONS	MIN.	TYP.	MAX.	UNIT
Crystal oscillator						
f_n	nominal frequency (usually 27 MHz)	3rd harmonic	–	–	30	MHz
$\Delta f/f_n$	permissible deviation of nominal frequency	note 3	-50×10^{-6}	–	$+50 \times 10^{-6}$	
CRYSTAL SPECIFICATION						
T_{amb}	ambient temperature		0	–	70	°C
C_L	load capacitance		8	–	–	pF
R_S	series resistance		–	–	80	Ω
C_{mot}	motional capacitance (typical)		1.2	1.5	1.8	fF
C_{par}	parallel capacitance (typical)		2.8	3.5	4.2	pF
Data and reference signal output timing						
C_L	output load capacitance		7.5	–	40	pF
t_h	output hold time		4	–	–	ns
t_d	output delay time		–	–	18	ns
Outputs: C, VBS, CVBS and RGB						
$V_{oCVBS(p-p)}$	output voltage CVBS (peak-to-peak value)	see Table 76	–	1.23	–	V
$V_{oVBS(p-p)}$	output voltage VBS (S-video) (peak-to-peak value)	see Table 76	–	1	–	V
$V_{oC(p-p)}$	output voltage C (S-video) (peak-to-peak value)	see Table 76	–	0.89	–	V
$V_{oR,G,B(p-p)}$	output voltage R, G, B (peak-to-peak value)	see Table 76	–	0.7	–	V
ΔV	inequality of output signal voltages	note 4	–	–	2	%
R_L	output load resistance		–	37.5	–	Ω
B	output signal bandwidth of DACs	–3 dB	10	–	–	MHz
$LE_{lf(i)}$	low frequency integral linearity error of DACs		–	–	±3	LSB
$LE_{lf(d)}$	low frequency differential linearity error of DACs		–	–	±1	LSB
$t_{d(pipe)(MP)}$	total pipeline delay from MP port	27 MHz	–	–	82	LLC

Notes

1. At maximum supply voltage with highly active input signals.
2. The data is for both input and output direction.
3. If an internal oscillator is used, crystal deviation of nominal frequency is directly proportional to the deviation of subcarrier frequency and line/field frequency.
4. Referring to peak-to-peak analog voltages resulting from identical peak-to-peak digital codes.

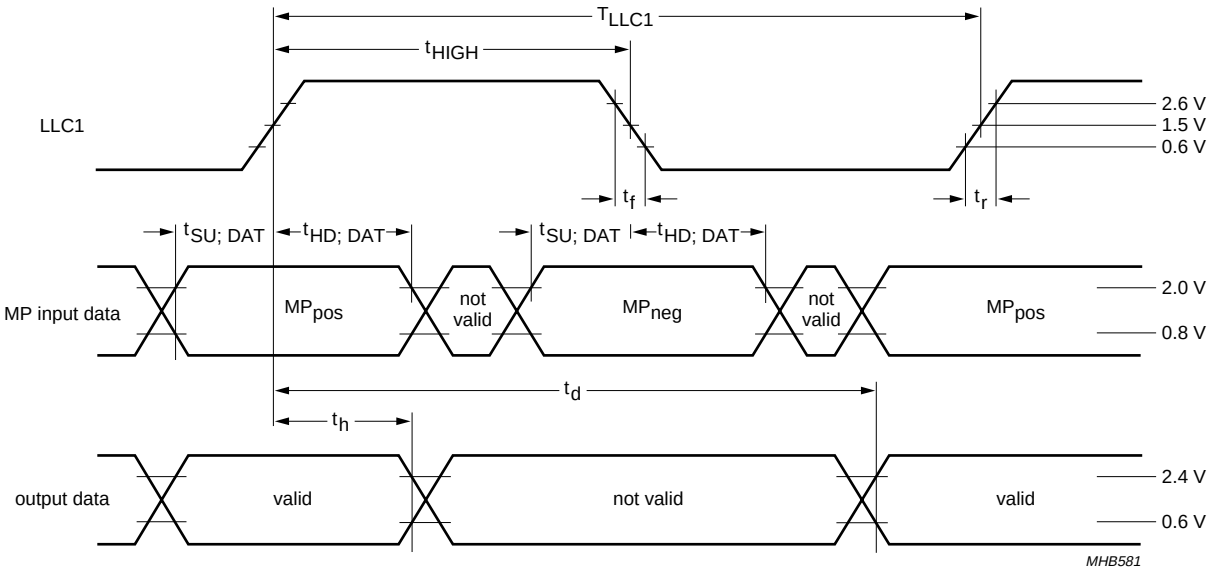

Fig.20 Clock data timing.

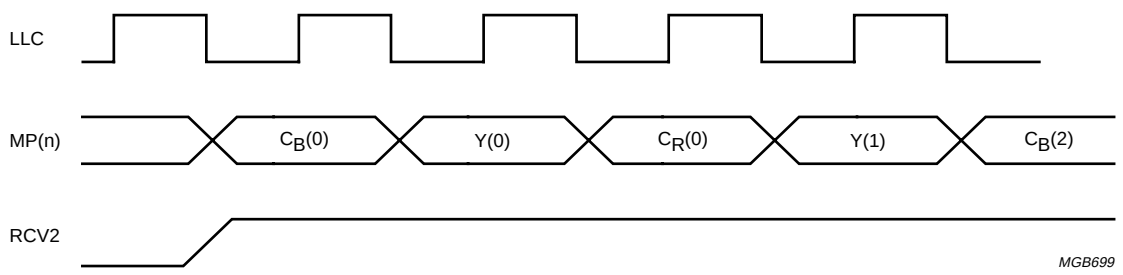

The data demultiplexing phase is coupled to the internal horizontal phase.
The phase of the RCV2 signal is programmed to 262 for 50 Hz and to 234 for 60 Hz in this example in output mode (RCV2S).

Fig.21 Functional timing.

10.1 Explanation of RTCI data bits

1. The HPLL increment is not evaluated by the SAF7129AH.
2. The SAF7129AH generates the subcarrier frequency from the FSCPLL increment if enabled (see item 7).
3. The PAL bit indicates the line with inverted (R – Y) component of colour difference signal.
4. If the reset bit is enabled (RTCE = 1; DECPH = 1; PHRES = 00), the phase of the subcarrier is reset in each line whenever the reset bit of RTCI input is set to logic 1.
5. If the FISE bit is enabled (RTCE = 1; DECFIS = 1), the SAF7129AH takes this bit instead of the FISE bit in subaddress 61H.
6. If the odd/even bit is enabled (RTCE = 1; DECOE = 1), the SAF7129AH ignores its internally generated odd/even flag and takes the odd/even bit from RTCI input.
7. If the colour detection bit is enabled (RTCE = 1; DECCOL = 1) and no colour was detected (colour detection bit = 0), the subcarrier frequency is generated by the SAF7129AH. In the other case (colour detection bit = 1) the subcarrier frequency is evaluated out of FSCPLL increment.

   If the colour detection bit is disabled (RTCE = 1; DECCOL = 0), the subcarrier frequency is evaluated out of FSCPLL increment, independent of the colour detection bit of RTCI input.

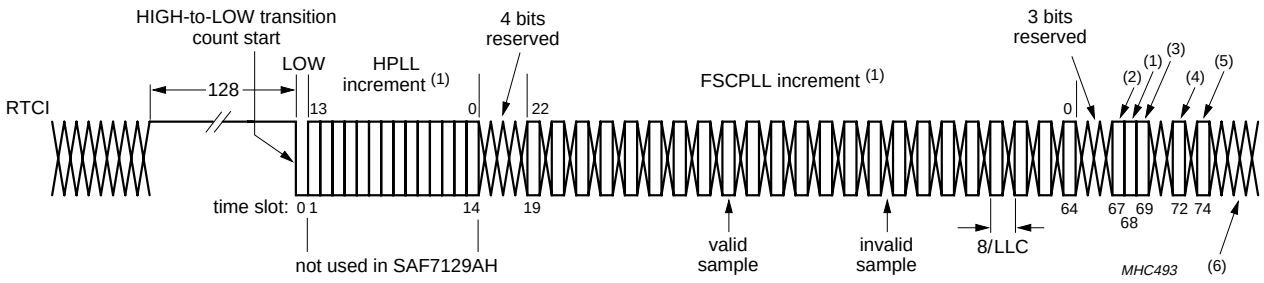

(1) SAF7113 and SAF7118 support RTC level 3.1.
(2) Sequence bit: PAL: 0 = (R – Y) line normal, 1 = (R – Y) line inverted; NTSC: 0 = no change.
(3) FISE bit: 0 = 50 Hz, 1 = 60 Hz.
(4) Odd/even bit: odd_even from external.
(5) Colour detection: 0 = no colour detected, 1 = colour detected.
(6) Reserved bits: 229 with 50 Hz systems, 226 with 60 Hz systems.

Fig.22 RTCI timing.

10.2 Teletext timing

Time t_{FD} is the time needed to interpolate input data TTX and insert it into the CVBS and VBS output signal, such that it appears at t_{TTX} = 9.78 µs (PAL) or t_{TTX} = 10.5 µs (NTSC) after the leading edge of the horizontal synchronization pulse.

Time t_{PD} is the pipeline delay time introduced by the source that is gated by TTXRQ in order to deliver TTX data. This delay is programmable by register TTXHD. For every active HIGH state at output pin TTXRQ, a new teletext bit must be provided by the source (new protocol) or a window of TTXRQ going HIGH is provided and the number of teletext bits, depending on the chosen teletext standard, is requested at input pin TTX (old protocol).

Since the beginning of the pulses representing the TTXRQ signal and the delay between the rising edge of TTXRQ and valid teletext input data are fully programmable (TTXHS and TTXHD), the TTX data is always inserted at the correct position after the leading edge of outgoing horizontal synchronization pulse.

Time $t_{i(TTXW)}$ is the internally used insertion window for TTX data; it has a constant length that allows insertion of 360 teletext bits at a text data rate of 6.9375 Mbits/s (PAL), 296 teletext bits at a text data rate of 5.7272 Mbits/s (WST) or 288 teletext bits at a text data rate of 5.7272 Mbits/s (NABTS). The insertion window is not opened if the control bit TTXEN is logic 0.

Using appropriate programming, all suitable lines of the odd field (TTXOVS and TTXOVE) plus all suitable lines of the even field (TTXEVS and TTXEVE) can be used for teletext insertion.

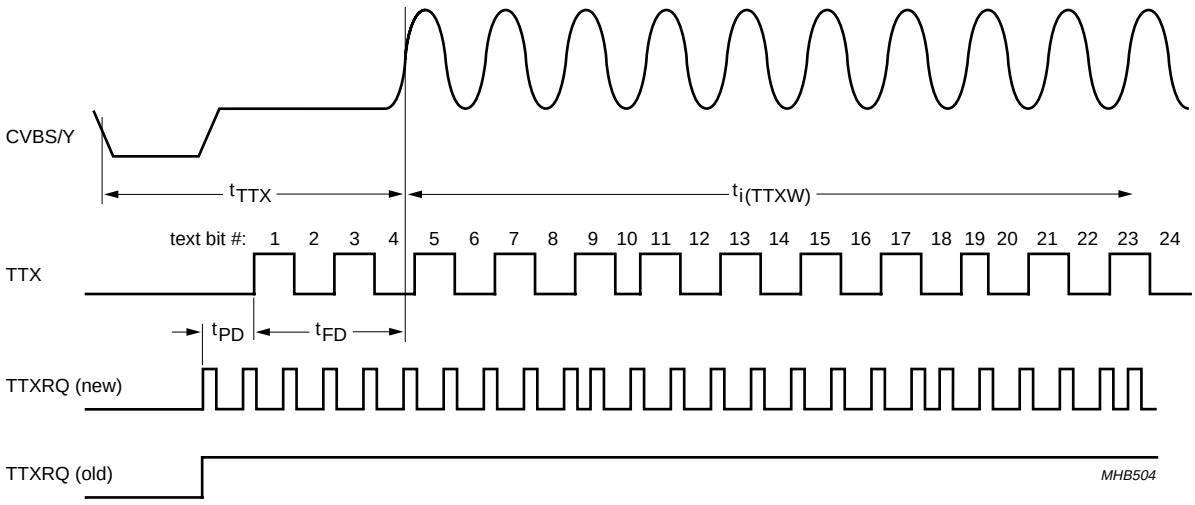

Fig.23 Teletext timing.

11 APPLICATION INFORMATION

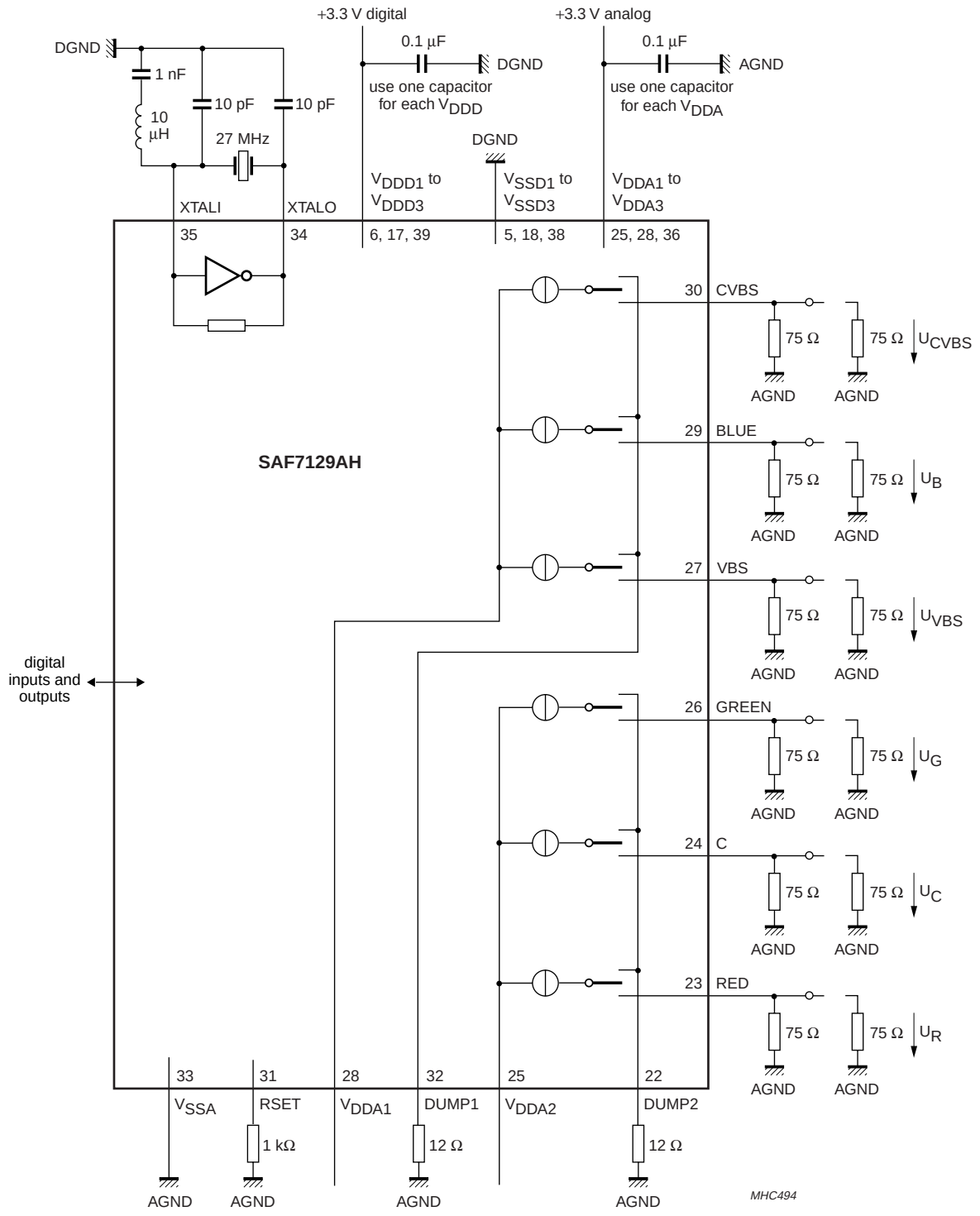

Fig.24 Application circuit.

11.1 Digital output signals

The digital output signals in front of the DACs under nominal conditions occupy different conversion ranges, as indicated in Table 76 for a $^{100}/_{100}$ colour bar signal.

Values for the external series resistors result in a 75 Ω load.

Table 76 Digital output signals conversion range

CONVERSION RANGE (peak-to-peak)		
CVBS SYNC-TIP TO PEAK-CARRIER (digits)	**Y (VBS) SYNC-TIP TO WHITE (digits)**	**RGB (Y) BLACK TO WHITE AT GDY = GDC = −6 (digits)**
1016	881	712

12 PACKAGE OUTLINE

QFP44: plastic quad flat package; 44 leads (lead length 1.6 mm); body 10 x 10 x 2 mm **SOT803-1**

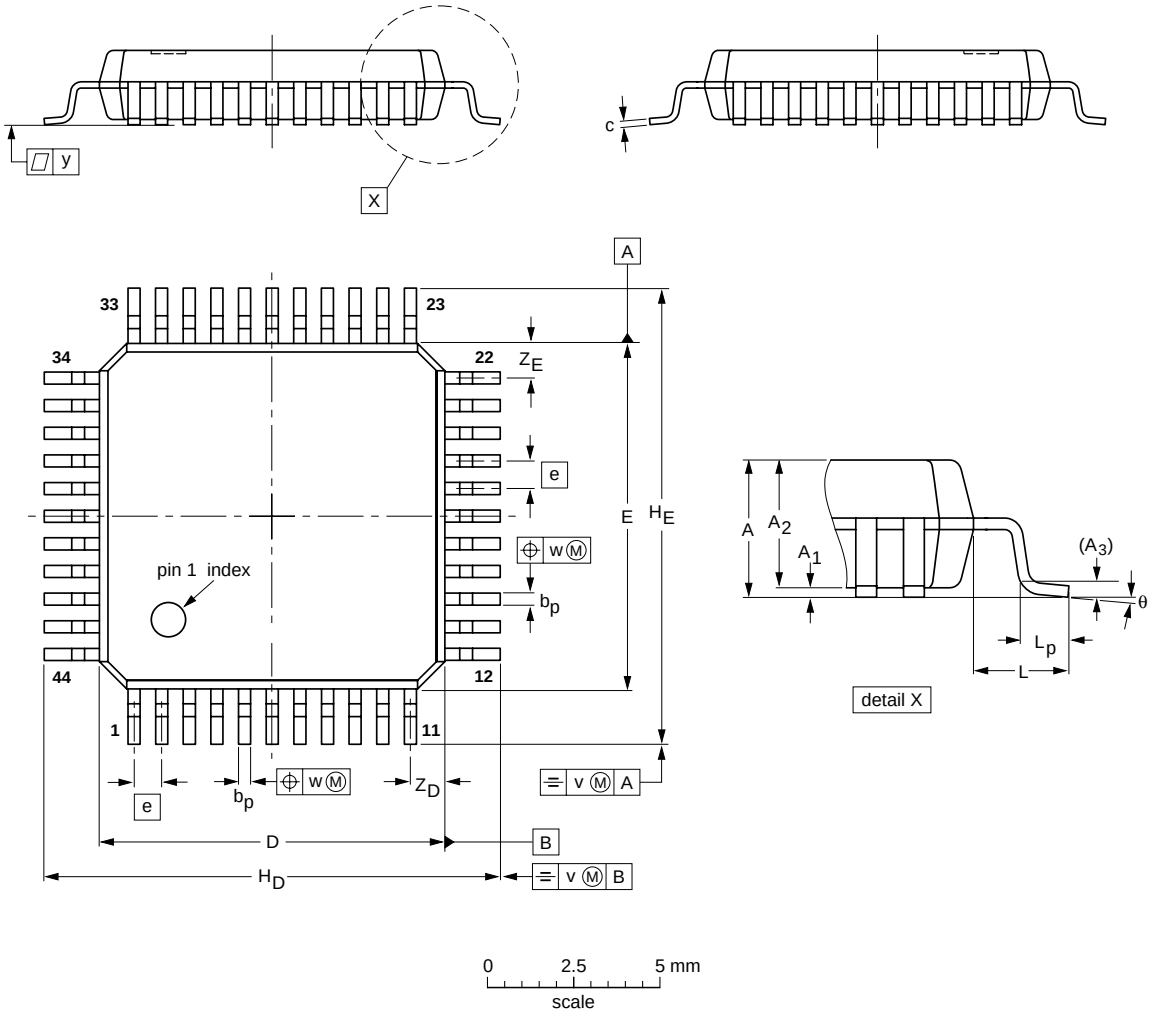

DIMENSIONS (mm are the original dimensions)

UNIT	A max.	A_1	A_2	A_3	b_p	c	D(1)	E(1)	e	H_D	H_E	L	L_p	v	w	y	Z_D(1)	Z_E(1)	θ
mm	2.45	0.25 0.10	2.2 1.8	0.25	0.45 0.30	0.23 0.11	10.1 9.9	10.1 9.9	0.8	13.45 12.95	13.45 12.95	1.6	1.03 0.73	0.2	0.2	0.1	1.2 0.8	1.2 0.8	7° 0°

Note

1. Plastic or metal protrusions of 0.25 mm maximum per side are not included.

OUTLINE VERSION	REFERENCES				EUROPEAN PROJECTION	ISSUE DATE
	IEC	JEDEC	JEITA			
SOT803-1	134E05	MS-022	ED-7311CB			03-01-29

13 SOLDERING

13.1 Introduction to soldering surface mount packages

This text gives a very brief insight to a complex technology. A more in-depth account of soldering ICs can be found in our *"Data Handbook IC26; Integrated Circuit Packages"* (document order number 9398 652 90011).

There is no soldering method that is ideal for all surface mount IC packages. Wave soldering can still be used for certain surface mount ICs, but it is not suitable for fine pitch SMDs. In these situations reflow soldering is recommended.

13.2 Reflow soldering

Reflow soldering requires solder paste (a suspension of fine solder particles, flux and binding agent) to be applied to the printed-circuit board by screen printing, stencilling or pressure-syringe dispensing before package placement. Driven by legislation and environmental forces the worldwide use of lead-free solder pastes is increasing.

Several methods exist for reflowing; for example, convection or convection/infrared heating in a conveyor type oven. Throughput times (preheating, soldering and cooling) vary between 100 and 200 seconds depending on heating method.

Typical reflow peak temperatures range from 215 to 270 °C depending on solder paste material. The top-surface temperature of the packages should preferably be kept:

- below 225 °C (SnPb process) or below 245 °C (Pb-free process)
  - for all BGA, HTSSON-T and SSOP-T packages
  - for packages with a thickness ≥ 2.5 mm
  - for packages with a thickness < 2.5 mm and a volume ≥ 350 mm^3 so called thick/large packages.
- below 240 °C (SnPb process) or below 260 °C (Pb-free process) for packages with a thickness < 2.5 mm and a volume < 350 mm^3 so called small/thin packages.

Moisture sensitivity precautions, as indicated on packing, must be respected at all times.

13.3 Wave soldering

Conventional single wave soldering is not recommended for surface mount devices (SMDs) or printed-circuit boards with a high component density, as solder bridging and non-wetting can present major problems.

To overcome these problems the double-wave soldering method was specifically developed.

If wave soldering is used the following conditions must be observed for optimal results:

- Use a double-wave soldering method comprising a turbulent wave with high upward pressure followed by a smooth laminar wave.
- For packages with leads on two sides and a pitch (e):
  - larger than or equal to 1.27 mm, the footprint longitudinal axis is **preferred** to be parallel to the transport direction of the printed-circuit board;
  - smaller than 1.27 mm, the footprint longitudinal axis **must** be parallel to the transport direction of the printed-circuit board.

  The footprint must incorporate solder thieves at the downstream end.
- For packages with leads on four sides, the footprint must be placed at a 45° angle to the transport direction of the printed-circuit board. The footprint must incorporate solder thieves downstream and at the side corners.

During placement and before soldering, the package must be fixed with a droplet of adhesive. The adhesive can be applied by screen printing, pin transfer or syringe dispensing. The package can be soldered after the adhesive is cured.

Typical dwell time of the leads in the wave ranges from 3 to 4 seconds at 250 °C or 265 °C, depending on solder material applied, SnPb or Pb-free respectively.

A mildly-activated flux will eliminate the need for removal of corrosive residues in most applications.

13.4 Manual soldering

Fix the component by first soldering two diagonally-opposite end leads. Use a low voltage (24 V or less) soldering iron applied to the flat part of the lead. Contact time must be limited to 10 seconds at up to 300 °C.

When using a dedicated tool, all other leads can be soldered in one operation within 2 to 5 seconds between 270 and 320 °C.

13.5 Suitability of surface mount IC packages for wave and reflow soldering methods

PACKAGE[1]	SOLDERING METHOD	
	WAVE	REFLOW[2]
BGA, HTSSON..T[3], LBGA, LFBGA, SQFP, SSOP..T[3], TFBGA, USON, VFBGA	not suitable	suitable
DHVQFN, HBCC, HBGA, HLQFP, HSO, HSOP, HSQFP, HSSON, HTQFP, HTSSOP, HVQFN, HVSON, SMS	not suitable[4]	suitable
PLCC[5], SO, SOJ	suitable	suitable
LQFP, QFP, TQFP	not recommended[5][6]	suitable
SSOP, TSSOP, VSO, VSSOP	not recommended[7]	suitable
CWQCCN..L[8], PMFP[9], WQCCN..L[8]	not suitable	not suitable

Notes

1. For more detailed information on the BGA packages refer to the *"(LF)BGA Application Note*" (AN01026); order a copy from your Philips Semiconductors sales office.
2. All surface mount (SMD) packages are moisture sensitive. Depending upon the moisture content, the maximum temperature (with respect to time) and body size of the package, there is a risk that internal or external package cracks may occur due to vaporization of the moisture in them (the so called popcorn effect). For details, refer to the Drypack information in the *"Data Handbook IC26; Integrated Circuit Packages; Section: Packing Methods"*.
3. These transparent plastic packages are extremely sensitive to reflow soldering conditions and must on no account be processed through more than one soldering cycle or subjected to infrared reflow soldering with peak temperature exceeding 217 °C ± 10 °C measured in the atmosphere of the reflow oven. The package body peak temperature must be kept as low as possible.
4. These packages are not suitable for wave soldering. On versions with the heatsink on the bottom side, the solder cannot penetrate between the printed-circuit board and the heatsink. On versions with the heatsink on the top side, the solder might be deposited on the heatsink surface.
5. If wave soldering is considered, then the package must be placed at a 45° angle to the solder wave direction. The package footprint must incorporate solder thieves downstream and at the side corners.
6. Wave soldering is suitable for LQFP, TQFP and QFP packages with a pitch (e) larger than 0.8 mm; it is definitely not suitable for packages with a pitch (e) equal to or smaller than 0.65 mm.
7. Wave soldering is suitable for SSOP, TSSOP, VSO and VSSOP packages with a pitch (e) equal to or larger than 0.65 mm; it is definitely not suitable for packages with a pitch (e) equal to or smaller than 0.5 mm.
8. Image sensor packages in principle should not be soldered. They are mounted in sockets or delivered pre-mounted on flex foil. However, the image sensor package can be mounted by the client on a flex foil by using a hot bar soldering process. The appropriate soldering profile can be provided on request.
9. Hot bar or manual soldering is suitable for PMFP packages.

14 DATA SHEET STATUS

LEVEL	DATA SHEET STATUS(1)	PRODUCT STATUS(2)(3)	DEFINITION
I	Objective data	Development	This data sheet contains data from the objective specification for product development. Philips Semiconductors reserves the right to change the specification in any manner without notice.
II	Preliminary data	Qualification	This data sheet contains data from the preliminary specification. Supplementary data will be published at a later date. Philips Semiconductors reserves the right to change the specification without notice, in order to improve the design and supply the best possible product.
III	Product data	Production	This data sheet contains data from the product specification. Philips Semiconductors reserves the right to make changes at any time in order to improve the design, manufacturing and supply. Relevant changes will be communicated via a Customer Product/Process Change Notification (CPCN).

Notes

1. Please consult the most recently issued data sheet before initiating or completing a design.
2. The product status of the device(s) described in this data sheet may have changed since this data sheet was published. The latest information is available on the Internet at URL http://www.semiconductors.philips.com.
3. For data sheets describing multiple type numbers, the highest-level product status determines the data sheet status.

15 DEFINITIONS

Short-form specification — The data in a short-form specification is extracted from a full data sheet with the same type number and title. For detailed information see the relevant data sheet or data handbook.

Limiting values definition — Limiting values given are in accordance with the Absolute Maximum Rating System (IEC 60134). Stress above one or more of the limiting values may cause permanent damage to the device. These are stress ratings only and operation of the device at these or at any other conditions above those given in the Characteristics sections of the specification is not implied. Exposure to limiting values for extended periods may affect device reliability.

Application information — Applications that are described herein for any of these products are for illustrative purposes only. Philips Semiconductors make no representation or warranty that such applications will be suitable for the specified use without further testing or modification.

16 DISCLAIMERS

Life support applications — These products are not designed for use in life support appliances, devices, or systems where malfunction of these products can reasonably be expected to result in personal injury. Philips Semiconductors customers using or selling these products for use in such applications do so at their own risk and agree to fully indemnify Philips Semiconductors for any damages resulting from such application.

Right to make changes — Philips Semiconductors reserves the right to make changes in the products - including circuits, standard cells, and/or software - described or contained herein in order to improve design and/or performance. When the product is in full production (status ‘Production’), relevant changes will be communicated via a Customer Product/Process Change Notification (CPCN). Philips Semiconductors assumes no responsibility or liability for the use of any of these products, conveys no licence or title under any patent, copyright, or mask work right to these products, and makes no representations or warranties that these products are free from patent, copyright, or mask work right infringement, unless otherwise specified.

17 PURCHASE OF PHILIPS I²C COMPONENTS

Purchase of Philips I²C components conveys a license under the Philips' I²C patent to use the components in the I²C system provided the system conforms to the I²C specification defined by Philips. This specification can be ordered using the code 9398 393 40011.

Philips Semiconductors – a worldwide company

Contact information

For additional information please visit **http://www.semiconductors.philips.com**. Fax: **+31 40 27 24825**
For sales offices addresses send e-mail to: **sales.addresses@www.semiconductors.philips.com**.

© Koninklijke Philips Electronics N.V. 2004

SCA76

All rights are reserved. Reproduction in whole or in part is prohibited without the prior written consent of the copyright owner.

The information presented in this document does not form part of any quotation or contract, is believed to be accurate and reliable and may be changed without notice. No liability will be accepted by the publisher for any consequence of its use. Publication thereof does not convey nor imply any license under patent- or other industrial or intellectual property rights.

Printed in The Netherlands R21/02/pp56 Date of release: 2004 Mar 16 Document order number: 9397 750 12903

Let's make things better.

Philips
Semiconductors

PHILIPS