# Application guide

Flat-panel TV sets

# Contents


Your partner for flat-panel TV sets 3

1. Power solutions 4
   - 1.1 Primary AC/DC controllers
   - 1.2 Main power supply: secondary synchronous rectification ICs
   - 1.3 Standby power supply
   - 1.4 Discretes

2. RF reception stage 9
   - 2.1 Silicon tuners
   - 2.2 LNA

3. IF demodulators 12

4. Analog audio and video interfaces 13
   - 4.1 Audio digital-to-analog converters (DACs)
   - 4.2 Audio and video switches
   - 4.3 Audio amplifiers
   - 4.4 Headphone amplifiers
   - 4.5 High-speed ADC
   - 4.6 ESD protection for analog AV interfaces

5. HDMI interface 21
   - 5.1 HDMI switches
   - 5.2 HDMI receivers
   - 5.3 CEC controller
   - 5.4 ESD protection

6. Smart-card reader interface 24

7. Data transfer interfaces 28
   - 7.1 High-speed data switches
   - 7.2 ESD protection for USB
   - 7.3 ESD protection for USB 3.0
   - 7.4 ESD protection for SATA, eSATA
   - 7.5 ESD protection for Ethernet
   - 7.6 ESD protection and EMI filtering for SD Card and other low/medium-speed interfaces

8. Interfaces and control 33
   - 8.1 8/16/32-bit microcontrollers
   - 8.2 I²C GPIO expanders
   - 8.3 User-interface controls
   - 8.4 LED controllers
   - 8.5 I²C temperature sensors
   - 8.6 I²C level shifters
   - 8.7 I²C bridges (SPI, UART) and 16C-compatible UARTs
   - 8.8 I²C real-time clocks (RTCs)
   - 8.9 I²C design tools and tech support
   - 8.10 Logic functions
   - 8.11 Memory termination regulator

9. Discrete components for the main processing board 43
   - 9.1 Power solutions
   - 9.2 Special functions and general-purpose devices

10. Components for the backlight and panel 45
   - 10.1 LED drivers for panel backlight unit
   - 10.2 Discretes for backlight and panel

11. RF communication with remote control unit 47

Additional resources 48

# Introduction

## Your partner for flat-panel TV sets

NXP Semiconductors offers a wide portfolio of advanced solutions for flat-panel TV sets. All are built on our deep understanding of the needs of set designers and manufacturers, and of market requirements.

We can deliver application-specific solutions for reception, drawing on a complete range of silicon tuners that cover all the major standards for hybrid terrestrial, cable and satellite reception. We also support peripheral functions, such as advanced audio and HDMI interfaces, and provide an extensive portfolio of standard products for TVs.

We use next-generation packaging to save space, lower costs, and improve AV content security, and we reduce energy consumption with low-power technologies that dramatically increase efficiency. We design for ruggedness, supplying devices that stand up to intensive use, and we deliver the high integration needed to simplify development, lower BOM and production costs, and reduce time-to-market.

We are known for innovation and our ability to introduce new technologies that set the standard for performance, efficiency, and size. Our new chip-scale package (CSP) devices, for example, have an exceptionally compact footprint yet achieve a new benchmark in mechanical robustness.

We support our customers with a cost-efficient supply chain, and an enterprise-wide commitment to the highest standards of security, quality, and reliability. We also help our customers prepare for the future, by working with them to implement new features, such as 3D, that will drive growth. In short, our customers have the confidence that comes from working with a world-class partner.

**There's more.**

This application guide provides an introduction to our TV portfolio. It highlights many of the forward-thinking solutions we have available, but it's only the beginning. To learn more, please visit our dedicated application page at www.nxp.com/applications/consumer/flatpanel-display-tv-sets.html

**NXP improves performance throughout the system**

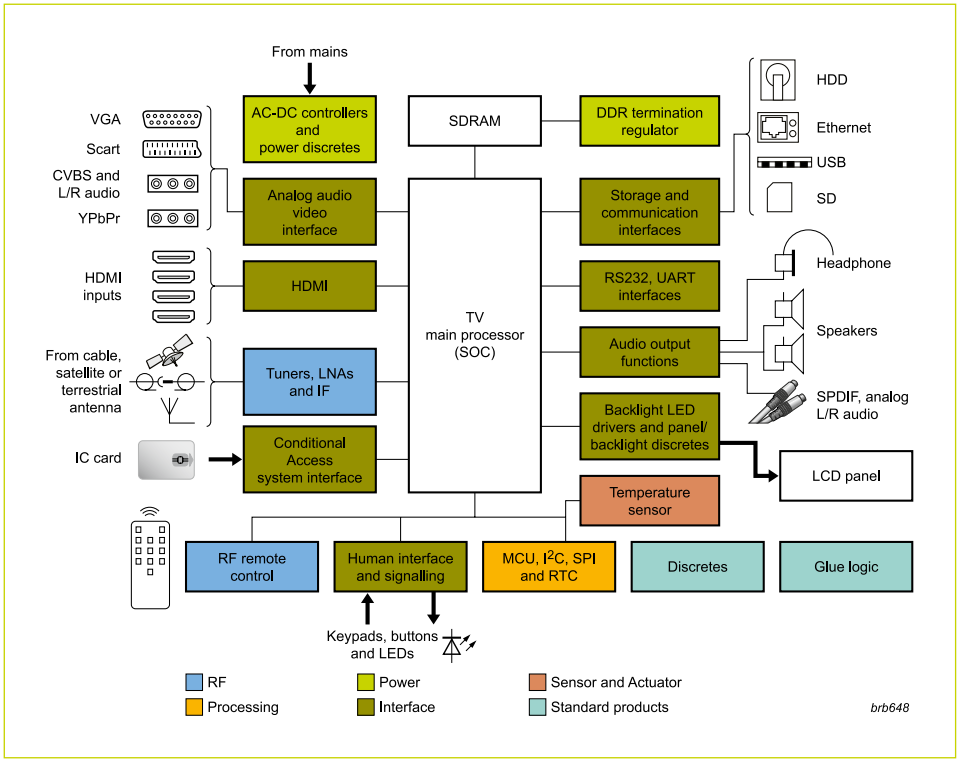

# 1. Power solutions

We specialize in saving power, and build on decades of expertise in portable and battery-powered systems. Our GreenChip™ family, now in its third generation, delivers best-in-class efficiency for power supplies. We offer AC-DC controllers for TVs ranging from small, low-power panels to the largest screens, and our broad discretes portfolio helps optimize power consumption throughout the system.

## 1.1 Primary AC/DC controllers

### <75 W flyback controller TEA1738 for primary control of small flat-panel TVs

The TEA1738 supports high-end regulation schemes. For designs that need less sophisticated flyback control, the TEA1733 is recommended.

### Features

- SMPS controller IC enabling low-cost applications
- Large input voltage range (12 to 30 V)
- Integrated OverVoltage Protection (OVP) on pin $V_{CC}$
- Very low supply current during start-up and restart (typically 10 µA)
- Low supply current during normal operation (typically 0.55 mA without load)
- Overpower or high/low line compensation
- Adjustable overpower time-out
- Adjustable overpower restart timer
- Fixed switching frequency with frequency jitter to reduce EMI
- Frequency reduction at medium power operation to maintain high efficiency
- Frequency reduction with fixed minimum peak current
- Frequency increase at peak power operation
- Slope compensation for CCM operation
- Low and adjustable OverCurrent Protection (OCP) trip level
- Adjustable soft-start operation
- Two protection inputs (e.g. for input UVP and OVP, OTP and output OVP)
- IC overtemperature protection

### TEA1738 selection table

| Type | Safe restart protection | Latched protection | Low startup voltage (13.2 V typical) |
|---|---|---|---|
| TEA1738T | Yes | No | No |
| TEA1738FT | Yes | No | Yes |
| TEA1738LT | No | Yes | No |

### TEA1738T block diagram

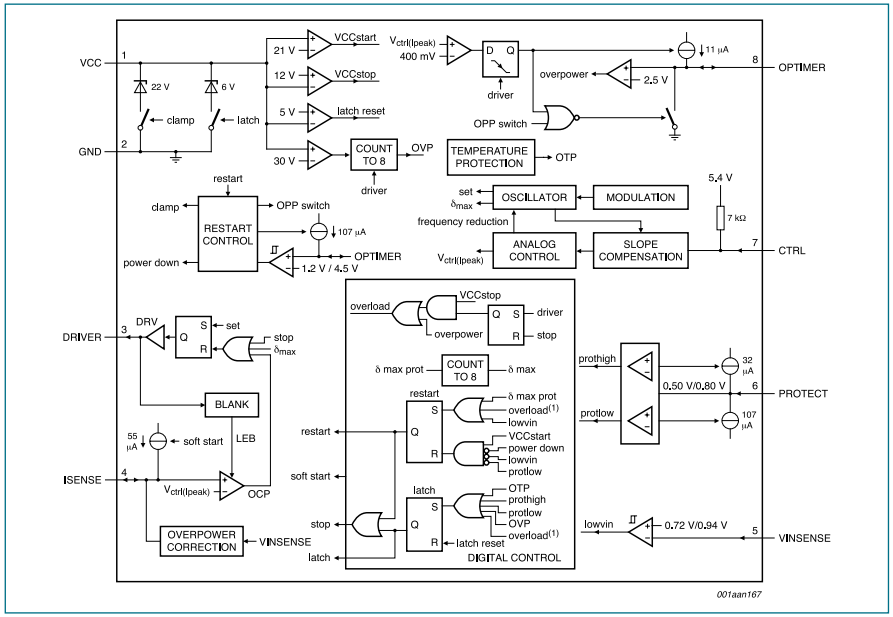

# 1. Power solutions

### 75 to 150 W GreenChip III flyback and PFC controller TEA1751 for primary control of mid-size TVs

#### Features

- Integrated PFC and flyback controller
- Universal mains supply operation [70 to 276 V (AC)]
- NXP-patented dual-boost PFC with accurate maximum output voltage
- High level of integration, for very low external component count and cost-effective design
- On-chip start-up current source

#### PFC green features

- NXP-patented valley/zero voltage switching for minimum switching losses
- Frequency limitation to reduce switching losses
- PFC is switched off when a low load is detected at the flyback output

#### Flyback green features

- NXP-patented valley switching for minimum switching losses
- Frequency reduction with fixed minimum peak current at low power operation for high efficiency at low output power levels

#### Protection features

- Safe restart mode for system fault conditions
- NXP-patented continuous mode protection via demagnetization detection for both converters
- UnderVoltage Protection (UVP) (foldback during overload)
- OverVoltage Protection (OVP) for both converters (adjustable for flyback converter)
- Mains voltage independent OverPower Protection (OPP)
- Open control loop protection for both converters. The open loop protection on the flyback converter is latched on the TEA1751L and safe restart on the TEA1751
- IC overtemperature protection
- Low and adjustable OverCurrent Protection (OCP) trip level for both converters
- General purpose input for latched protection, e.g. to be used for system OverTemperature Protection (OTP)

#### Typical application configuration

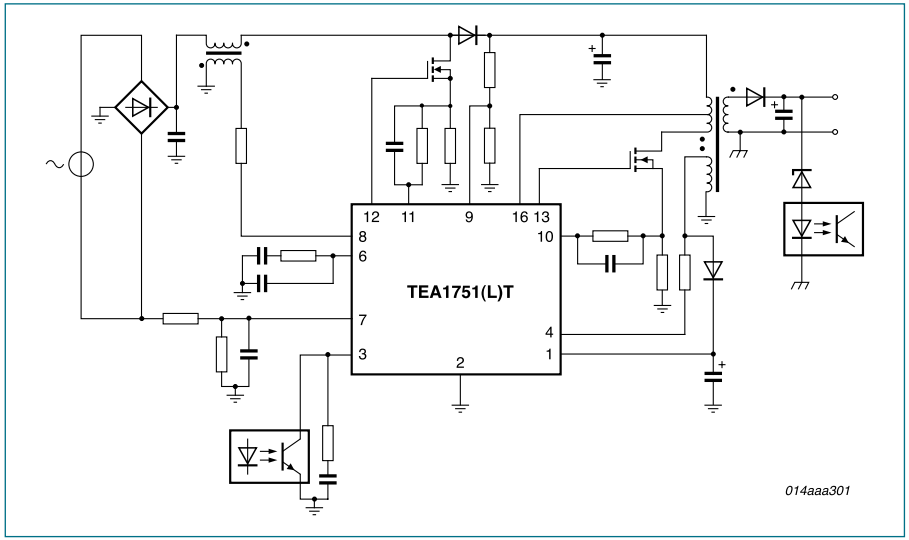

# 1. Power solutions

### 150 to 500 W main power supply resonant controller TEA1611 for primary control of large-screen TVs

#### Features

- Universal mains supply operation [70 to 276 V (AC)]
- Integrated high-voltage level-shift function
- Integrated high-voltage bootstrap diode
- Low start-up current (green function)
- Adjustable non-overlap time
- Internal OverTemperature Protection (OTP)
- OverCurrent Protection (OCP) that activates a shut-down timer
- Soft-start timing pin
- Transconductance error amplifier for ultra high-ohmic regulation feedback
- Latched shut-down circuit for OverVoltage Protection (OVP)
- Adjustable minimum and maximum frequencies
- UnderVoltage LockOut (UVLO)
- Fault latch reset input
- Wide supply voltage range (max 20 V)

### 150 to 500 W HBC and PFC controller TEA1713 for primary control of large-screen TVs

#### Features

- Adaptive non-overlap timing control
- Capacitive mode protection for HBC controller
- On-chip high-voltage start-up source
- Stand-alone operation or from external DC supply
- Extended wide supply voltage range (36 V)
- Boundary Condition Mode operation with on-time control
- Valley/zero voltage switching for min. switching losses
- Frequency limitation to reduce switching losses
- Accurate boost voltage regulation
- Burst mode switching with soft-start and soft-stop
- Adaptive non-overlap timing (cycle-by-cycle)
- Burst mode switching to reduce low-load consumption
- Integrated high-voltage level shifter
- Adjustable min and max frequency (up to 500 kHz)

#### Basic configuration

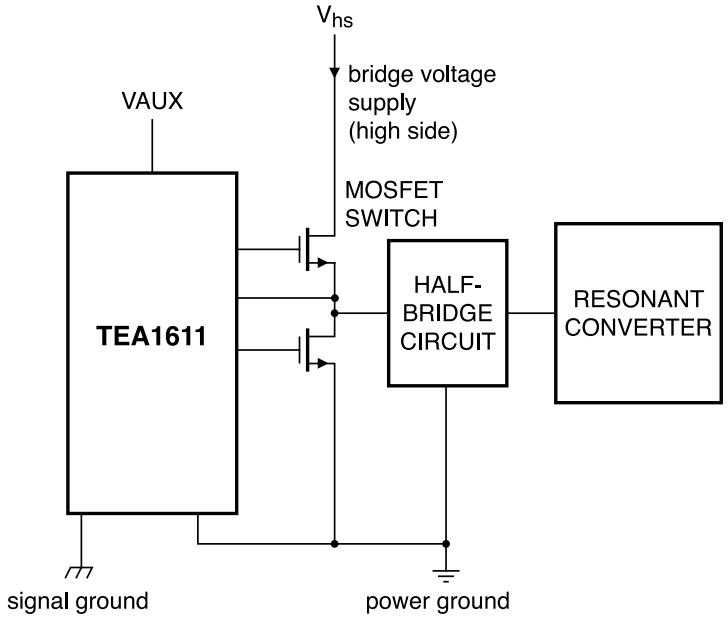

# 1. Power solutions

## 1.2 Main power supply: secondary synchronous rectification ICs

Designed for switched-mode power supplies (SMPS), NXP's extremely efficient and highly integrated GreenChip ICs enable simple, cost-effective power supplies with very few external components.

### High-power GreenChip family TEA175x(L) and GreenChip SR family TEA176x & TEA179x

#### Features

- Wide supply voltage range (8.5 to 38 V)
- High level of integration, resulting in very low external component count
- Wide opto output voltage range (3.5 to 38V)
- High driver output voltage of 10 V to drive all MOSFET brands to the lowest $R_{DSon}$
- Accurate internal voltage reference for voltage control (TEA176x)

## 1.3 Standby power supply

The TEA1520 family of STARplug SMPS ICs for low-power systems operate from universal AC mains supplies (80 to 276 V), with adjustable frequency for flexible design, and include many protections. In designs where the standby power must be minimized, the TEA1721 is recommended.

### Application example for TEA1761T

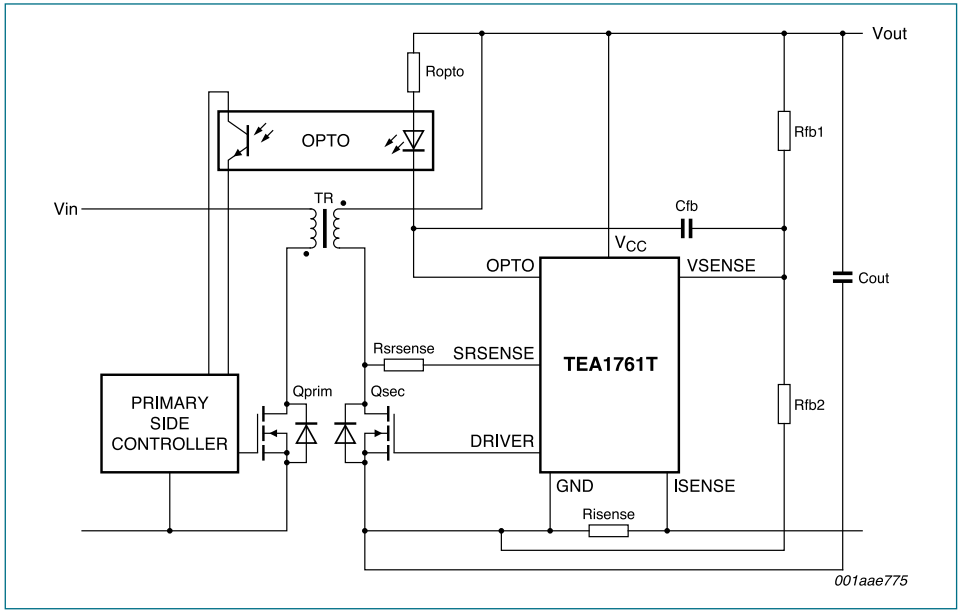


| Type number | Package | $R_{DSon}$ | Max output power on global mains | Application example |
|---|---|---|---|---|
| TEA1520T/N2 | SO-14 | 48 | 2 - 5 W | Standby supply |
| TEA1520P/N2 | DIP-8 | 48 | 2 - 5 W | Standby supply |
| TEA1521T/N2 | SO-14 | 24 | 3 - 7 W | Standby supply |
| TEA1521P/N2 | DIP-8 | 24 | 3 - 7 W | Standby supply |
| TEA1522T/N2 | SO-14 | 12 | 7 - 9 W | Standby supply |
| TEA1522P/N2 | DIP-8 | 12 | 7 - 9 W | Standby supply |
| TEA1523P/N2 | DIP-8 | 6.5 | 9 - 12 W | Standby supply |

# 1. Power solutions

## 1.4 Discretes

The power consumption of TV sets and other consumer appliances is progressively going down, because of new efficiency requirements and new power conservation regulations. This trend, among other factors, enables the usage of our new medium power Schottky diodes in the AC/DC 12 V rail.

- Our medium power Schottky diodes in SOD123W and SOD128 packages are used as freewheeling diodes on the secondary side, with an operating range of 30 to 60 V and 1 to 5 A. Recommended products include PMEG6030EP and PMEG4050EP
- Our TL431xxFDT series offer enhanced EMI ruggedness, an outstanding step response, and stability area for all SMPS applications

| Schottky diodes | | Zener diodes | | Analog ICs | |
|---|---|---|---|---|---|
| PMEG4030ER | SOD123W | BZX84J-SERIES | SOD323F | TL431xxFDT | SOT23 |
| PMEG4050EP | SOD128 | BZX84-SERIES | SOT23 | NX1117C/CE SERIES | SOT223 (SC73) |
| PMEG6030EP | SOD128 | | | | |

# 2. RF reception stage

## 2.1 Silicon tuners

Our portfolio supports compatibility with legacy transmission formats, by covering hybrid analog and digital terrestrial reception. We also support the latest digital standards, along with cable and free-to-air satellite reception. We offer the high performance required by TV set manufacturers, and our software drivers simplify design work even further.

All our tuners deliver excellent performance and are suitable for high-end analog/digital applications. Also, our products have been validated against major standards worldwide.

### NXP silicon tuners

| | |
|---|---|
| Worldwide coverage | • DVB-S, DVB-S2, DVB-C, DVB-C2, DVB-T, DVB-T2, ATSC A74, ISDB-T, DTMB, and more |
| Fully integrated | • LNA, RF & filters, loop-through circuitry, RF splitters, and more |
| High performance | • Noise figure, AGC, maximum input level, phase noise, image rejection, ACI, CSO, CTB, and more |
| Validated reference designs | • ATSC A74, NorDig, CENELEC, DTG, ARIB, and others |
| Robust technology | • More than 1 billion MOPLL & IF ICs sold<br>• Rigorous lab and field testing<br>• Customer test-case validation<br>• System validation with partners |

# 2. RF reception stage

For terrestrial TV reception, we recommend either the TDA18272 or TDA18273. Both can receive legacy analog signals, digital transmission according to worldwide adopted standards, and digital cable signals.

### Hybrid tuner TDA18273HN

Hybrid (analog/digital) silicon tuner TDA18273HN for terrestrial and cable TV reception.

### Features

- Fully integrated IF selectivity, eliminating the need for external SAW filters
- Worldwide multistandard terrestrial and cable operation
- Fully integrated oscillators
- Alignment-free
- Single 3.3 V supply voltage
- Power level detector
- Integrated wideband gain control
- Crystal oscillator output buffer (16 MHz) for single crystal applications
- I²C-bus interface compatible with 3.3 V microcontrollers
- Self AGC synchronization mode (VSYNC)
- Very fast tuning time
- LIF channel center frequency output ranging from 3 to 5 MHz
- 1.7, 6, 7, 8, and 10 MHz channel bandwidths
- Ready for DVB-T2 and DVB-C2
- RoHS compliant
- Strong immunity to spurious and field interferences

### TDA18273 block diagram

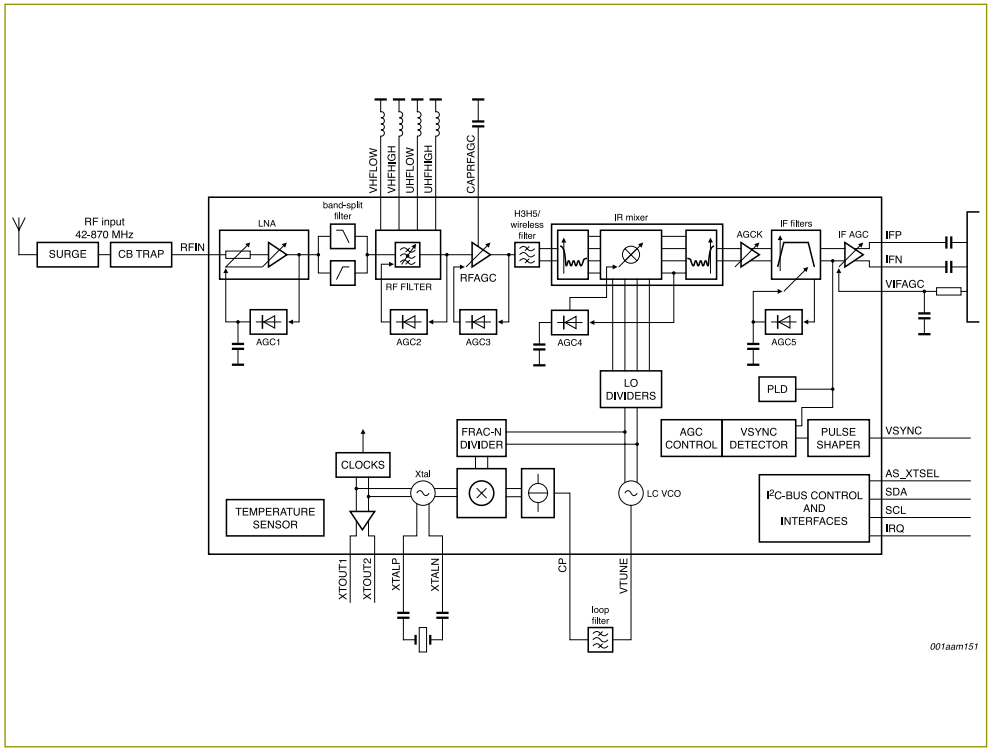

# 2. RF reception stage

### 8PSK satellite tuners TDA20136 and TDA20142

These tuners are recommended for TVs that need digital satellite reception, and especially those that receive Free to Air (FTA) satellite services.

TDA20142 is a general-purpose 8PSK satellite tuner that addresses the stringent requirements of both operator and FTA applications. It includes an integrated high-sensitivity LNA and a large dynamic range. There is also a built-in RF loop-through.

The TDA20136 is a highly-integrated dual 8PSK satellite tuner with improved performance and features for demanding 8PSK Unicable applications. It consists of two integrated digital satellite tuners performing the functions of L-band and baseband amplification, quadrature down conversion, local oscillator injection, Automatic Gain Control (AGC), and baseband filtering. The TDA20136 provides an internal LNA with a four-way splitter to support up to four tuners through a single RF switch control. The device is designed to manage very low Signal-to-Noise Ratio (SNR) carriers, carrier offsets, and adjacent channel interference particular to the satellite link. The tuner IC contains broadband input power detectors, on-chip synthesizers, totally integrated VCOs, internal LNA attenuators, quadrature mixers, variable gain baseband amplifiers, and variable baseband filters.

| Part number | DVB-S | DVB-S2 | Single tuner | Dual tuner | Loop through | LNA spitter | RF switch | FTA LNA |
|---|---|---|---|---|---|---|---|---|
| TDA20136 | • | • | | • | • | • | • | |
| TDA20142 | • | • | • | | • | | | • |

### TDA20142 features

- Integrated, high-sensitivity LNA
- Excellent noise figure
- Very low phase noise
- Excellent linearity
- Wide dynamic range
- Loop-through output
- Integrated RF power detector
- Built-in auto-tuning machine eliminates the need for software calibration
- Buffered clock output

## 2.2 LNA

### LNAs BGU703x and BGU704x

For applications that require sensitivity and noise figure beyond what's already integrated into NXP's high-performance silicon tuners, an external LNA from the BGU703x or BGU704x series can be used in front of the terrestrial or cable tuner.

### BGU703x and BGU704x series

| Type | Supply voltage | Gain | Bypass | NF |
|---|---|---|---|---|
| BGU7031 | 5 V | 10 dB | No | 4.5 dB |
| BGU7032 | 5 V | 10 dB | Yes | 4.5 dB |
| BGU7033 | 5 V | 10 dB / 5 dB | Yes | 4.5 dB |
| BGU7041 | 3.3 V | 10 dB | No | 4 dB |
| BGU7042 | 3.3 V | 10 dB | Yes | 4 dB |

# 3. IF demodulators

Our IF demodulators are optimized for use with NXP silicon tuners, and are an ideal solution when a standalone IF demodulator is needed. The TDA8296 is a digital, multi-standard low-IF demodulator with programmable group delay and video gain equalizers, for an optimized system.

## Low-IF demodulator TDA8296

This alignment-free, digital multistandard vision and sound low IF signal PLL demodulator can be used in all countries worldwide for M/N, B/G/H, I, D/K, L and L-accent standards, for positive and negative video modulation including AM and FM mono sound processing. Two DACs provide CVBS and SSIF/mono audio. Included FM radio preprocessing provides a simple interface with demodulator/stereo decoder backends. All processing is done in the digital domain. The “easy programming” mode makes the I²C-bus protocol very simple. The designer can use one bit to set the proper standard with recommended content, or can use free programming.

## Features

- Digital IF demodulation for all analog TV standards worldwide (M/N, B/G/H, D/K, I, L and L-accent standard)
- Multistandard true synchronous demodulation with active carrier regeneration
- Alignment-free
- 16 MHz typical reference frequency input (from low IF tuner) or operating as crystal oscillator
- Internal PLL synthesizer which allows the use of a low-cost crystal (typically 16 MHz)
- Specially suited for the NXP Silicon Tuners TDA1827x
- No SAW filter needed
- Low application effort and external component count

## TDA8296 functional diagram

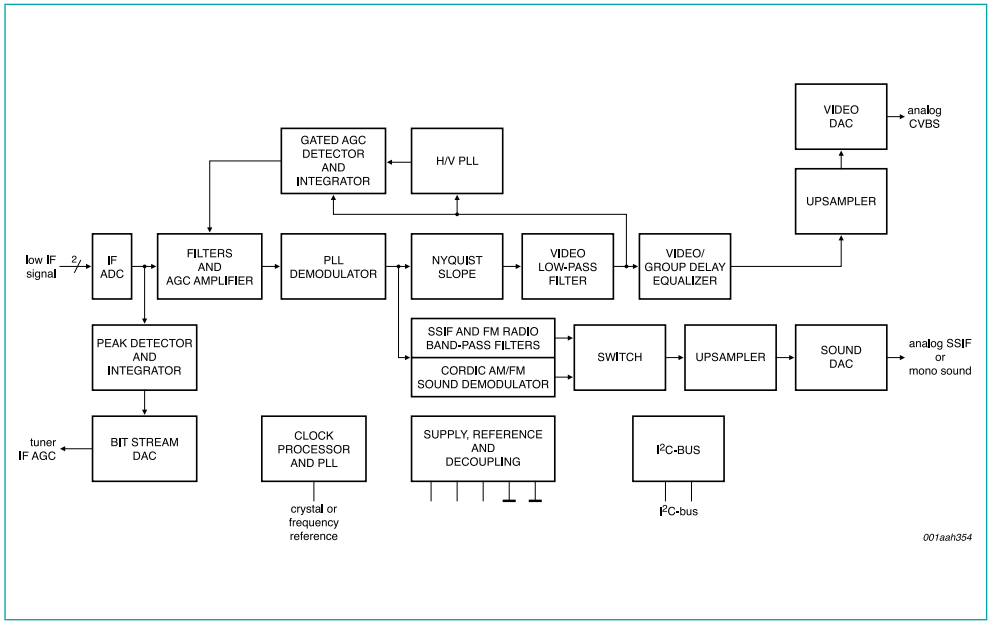

# 4. Analog audio and video interfaces

## 4.1 Audio digital-to-analog converters (DACs)

We offer a wide range of stereo DACs with serial inputs. The UDA133x series uses the I²S interface, the UDA1352TS supports SPDIF formats, and the UDA1355 is ideal for designs that require very complex audio I/O schemes.

### Audio DAC series UDA133x

| Type | Supply | PLL | Volume control | Control | Data formats | Package |
|---|---|---|---|---|---|---|
| UDA1330ATS | 2.7 to 5.5 V | | Digital logarithm | I²C / L3 / Static | I²S, LSB, or MSB justified; 16, 18, 20, 24 bit; 1 $F_s$ | SSOP16 |
| UDA1334ATS | 2.4 to 3.6 V | • | | Static | I²S, LSB justified; 16, 18, 20, 24 bit; 1 $F_s$ | SSOP16 |
| UDA1334BTS | 2.4 to 3.6 V | | | Static | | SSOP16 |

### UDA1334ATS block diagram

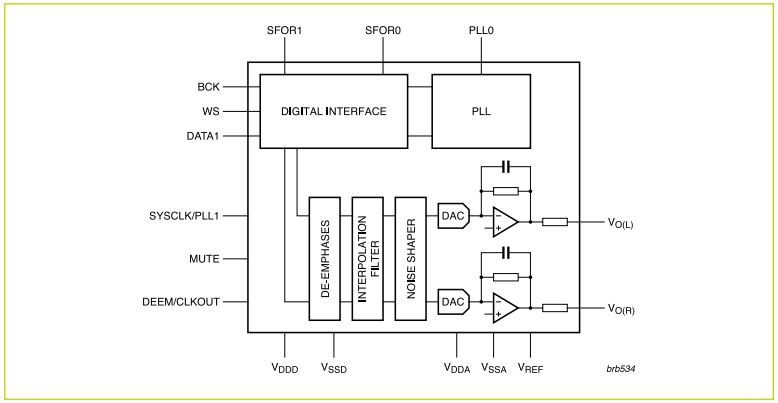


### Audio DAC UDA1352TS

| Type | Output | Control | Noise shaper | Sys clock | PLL | PCM detect | SPDIF lock | AC-3/MPEG detect | Ch status | Vol control | DAC | DSP | Data formats | Package |
|---|---|---|---|---|---|---|---|---|---|---|---|---|---|---|
| UDA1352TS | Stereo | L3/I²C | 5th | 256 fs | • | • | • | • | 40-bit | dB Lin | Anti-plop Auto mute | Bass boost, treble | IEC958 (SPDIF); 28 to 100 kHz | SSOP28 |

# 4. Analog audio and video interfaces

## Audio codec UDA1355

An SPDIF codec for systems that require very complex audio I/O schemes.

## Features

- 2.4 to 3.6 V supply voltage
- SPDIF I/O codec
  - 4 SPDIF inputs by select switch
  - 1 SPDIF output
  - Stereo analog I/O
- $I^2C$ / L3 control and static mode of operation
- Mixing features for 2 data streams
- ADC with volume control -63.5 to 24 dB
- DAC with sound processing
  - Left/right volume control: -78 to 0 dB
  - Left/right bass boost and treble control
  - Optional resonant bass boost control
- Multiple operating modes
  - SPDIF to $I^2S$ to SPDIF + analog
  - Analog to $I^2S$ to SPDIF
  - SPDIF to analog

## UDA1355 block diagram

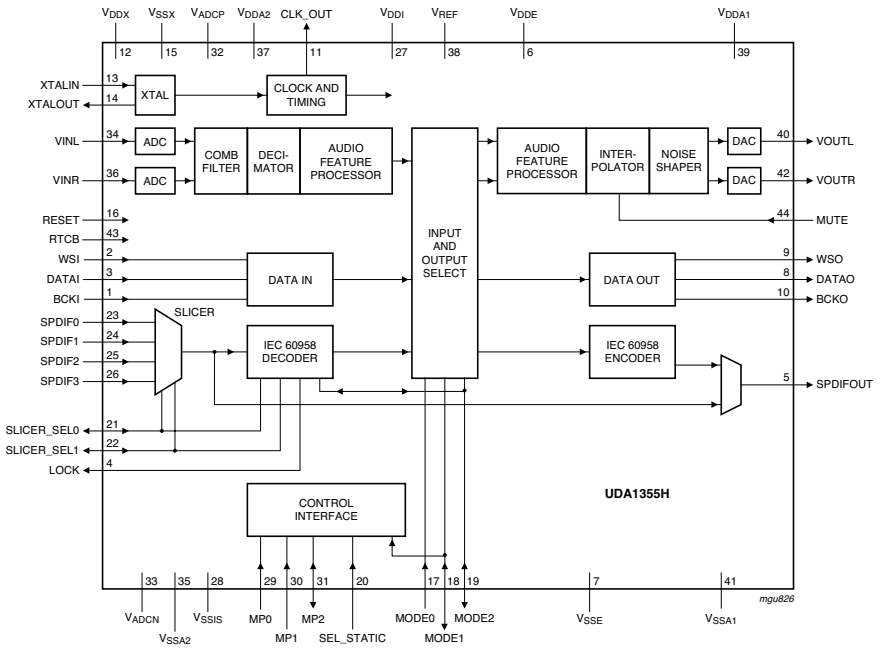

# 4. Analog audio and video interfaces

## 4.2 Audio and video switches

These switches support multiplexing and demultiplexing of analog audio and video signals (including HD and UXGA) without signal degradation.

### Quad 5 V 2-1 video mux/demux NX5DV330

This single 5 V analog switch (4PCO/4PTT) supports a bandwidth of 300 MHz and offers 5 Ω on resistance. It is available in SO, SSOP, TSSOP, and DQFN packages.

### VGA video switch NX5DV715

This 1:2 VGA switch is available in a QFN32 package.

### Low-ohmic audio switches NX3Lxxxx

These switches can be used to connect the TV's SoC to multiple selectable connectors on the back panel, or on the side panel, such as SCART or analog L/R audio connections.

### Features

- Low-ohmic, on resistance RON <1.0 Ω for minimal signal attenuation
- -90 dB isolation and crosstalk for superior signal integrity
- Low current consumption for higher power savings
- Low RON / CON combination adds performance and flexibility:
  - Digital data switching in portable applications
  - Analog functions in audio applications
  - Audio and data multiplexing around interface
- 7.5 kV ESD performance or better
- Built-in "translator/level shifter" function ("T" models only)
  - interfaces more easily with low voltage ASIC applications
  - reduces component count
- Smallest footprint: PicoGate and MicroPak packages with 0.35 mm pitch

# 4. Analog audio and video interfaces

## 4.3 Audio amplifiers

To drive the TV's speakers, NXP offers a large range of Class-AB and Class-D stereo amplifiers with flexible choices for packaging and output power.

### Class-AB amplifiers

| Product | Description | Package |
|---|---|---|
| TDA1517(P)(ATW) | 2X6 W @ 14.4 V, 4 Ω | SIL9, HDIP18, SO20L |
| TDA7056(A)(AT)(B) | 3 W @ 12 V, 16 Ω | SIL9, SO20 |

### Class-D amplifiers

| Product | Description | Package |
|---|---|---|
| TDA8932BT/N2 | 2X15 W @ 22 V, 4 Ω | SO32 |
| TDA8932BTW/N2 | 2X18 W @ 24 V, 4 Ω | HTSSOP32 |
| TDA8933BTW | 2X10 W @ 24 V, 8 Ω | HTSSOP32 |
| TFA9810T | 2X9 W @ 12 V, 8 Ω | SO32 |
| TFA9815T | 2X28 W @ 18 V , 8 Ω and 2X17.8 W @ 12 V, 4 Ω | SO32 |

## 4.4 Headphone amplifiers

For TV sets that include a front-panel connector for headphones, the headphone amplifier TDA1308 and Class-G headphone driver SA58635 are recommended.

# 4. Analog audio and video interfaces

## Class-AB stereo headphone driver TDA1308

### Features

- Wide temperature range
- No switch ON/OFF clicks
- Excellent power supply ripple rejection
- Low power consumption
- Short-circuit resistant
- High performance
- High signal-to-noise ratio
- High slew rate
- Low distortion
- Large output voltage swing

## Class-G headphone driver SA58635

### Features

- High efficiency with dynamic power management
- I²C interface and control
  - Volume control (32-step taper audio)
  - Software shutdown
  - Independent channel mute and enable
- Low supply current: 1.5 mA typ (battery friendly)
- S/N performance of 100 dB
- Integrated charge pump, buck converter
- Thermal and short-circuit protection circuitry
- Pop-and-click suppression circuitry
- 16-bump WL-CSP (1.7 x 1.7 x 0.4 mm)

### TDA1308(A) block diagram

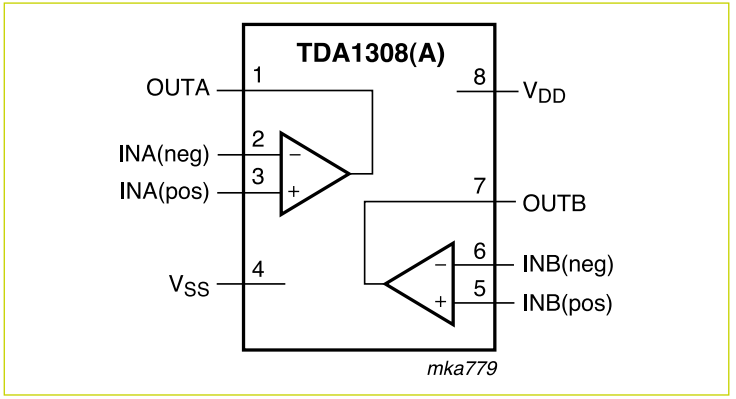


### Typical application of SA58635

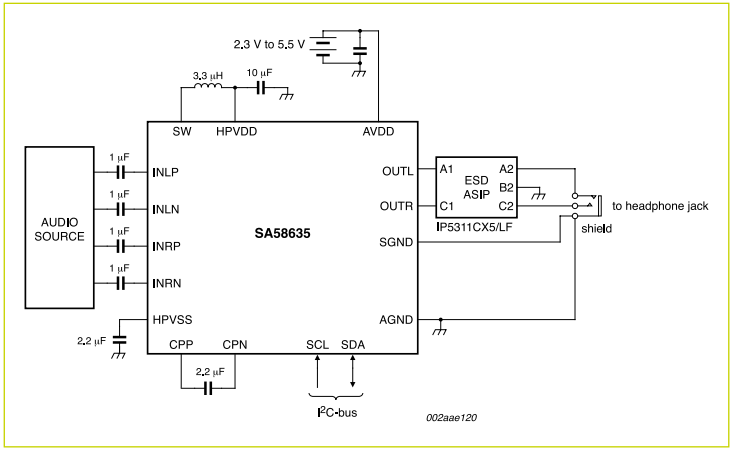

# 4. Analog audio and video interfaces

## 4.5 High-speed ADC

### Triple 8-bit video converter interface TDA9955HL

Operating at a sampling rate of up to 170 MHz, this device can convert an analog RGB or YUV (YPbPr) signal into a digital RGB or YUV (YCbCr) signal.

### TDA9955 block diagram

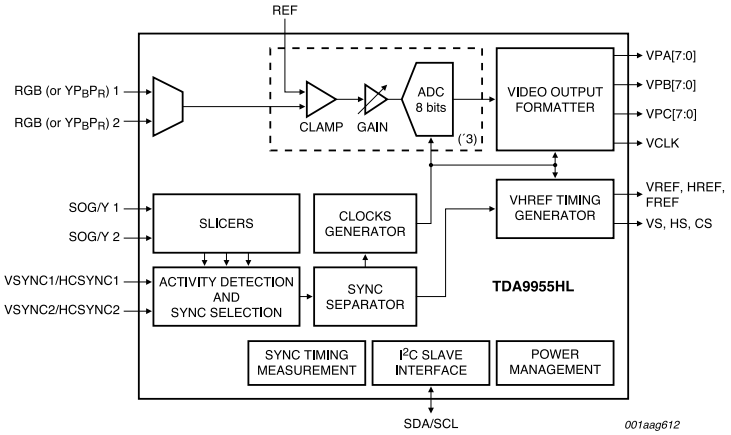


### Features

- Triple 8-bit Analog-to-Digital Converter (ADC)
- Three independent analog video sources, up to 170 MHz selectable via the I²C-bus
- Analog composite sync slicer with integrated recognition
- Frame and field detection for interlaced video signal
- Analog video voltage input from 0.45 to 0.9 V (p-p) to produce a full-scale ADC input of 1.0 V (p-p)
- Three clamps for programming an 8-bit clamping code from 0 to +191 in steps of 1 LSB for RGB and YUV signals
- Three video amplifiers controlled via I²C-bus to reach full-scale resolution
- Amplifier bandwidth of 100 MHz
- Low gain variation with temperature
- I²C-bus controlled Phase-Locked Loop (PLL) to generate the ADCs, formatter, and output clocks (can be locked in line frequency from 15 to 95 kHz)
- Integrated PLL divider
- Programmable clock phase adjustment cells
- Matrix and offsets available for conversion of RGB or YUV signal coming from analog video sources into YUV or RGB
- Output format RGB 4:4:4, YUV 4:4:4, YUV 4:2:2 ITU-R BT.656 or YUV 4:2:2 semi-planar standard on output bus
- Integrated downsampling-by-two with selectable filters on CB and CR channels in the 4:2:2 mode
- IC controlled via the I²C-bus, 5 V tolerant and bit rate up to 400 kbit/s
- TTL inputs 5 V tolerant
- LV-TTL outputs
- Power-down mode
- 1.8 and 3.3 V power supplies

# 4. Analog audio and video interfaces

## 4.6 ESD protection for analog AV interfaces

We offer discrete and integrated ESD protection devices for all the audio and video interfaces commonly used by a TV set, so it's easy to find the right configuration for a given application layout.

### ESD protection for SCART

As shown in the diagrams, the IP4220CZ6 and the IP4221-S/XS can be used to protect SCART signals, as can the IP4283CZ10 and IP4282CZ6. Other configurations are also possible.

### IP4220CZ6 and IP4221-S/XS configuration

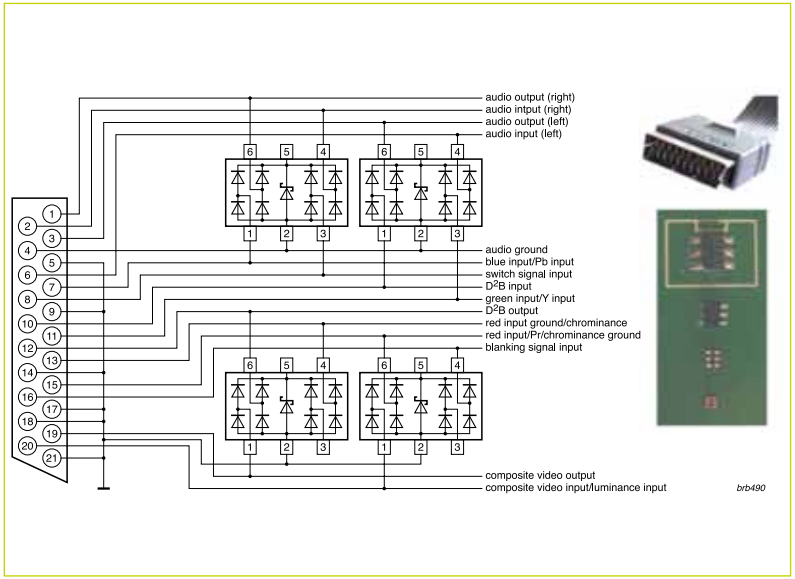


### IP4283CZ10 and IP4282CZ6 configuration

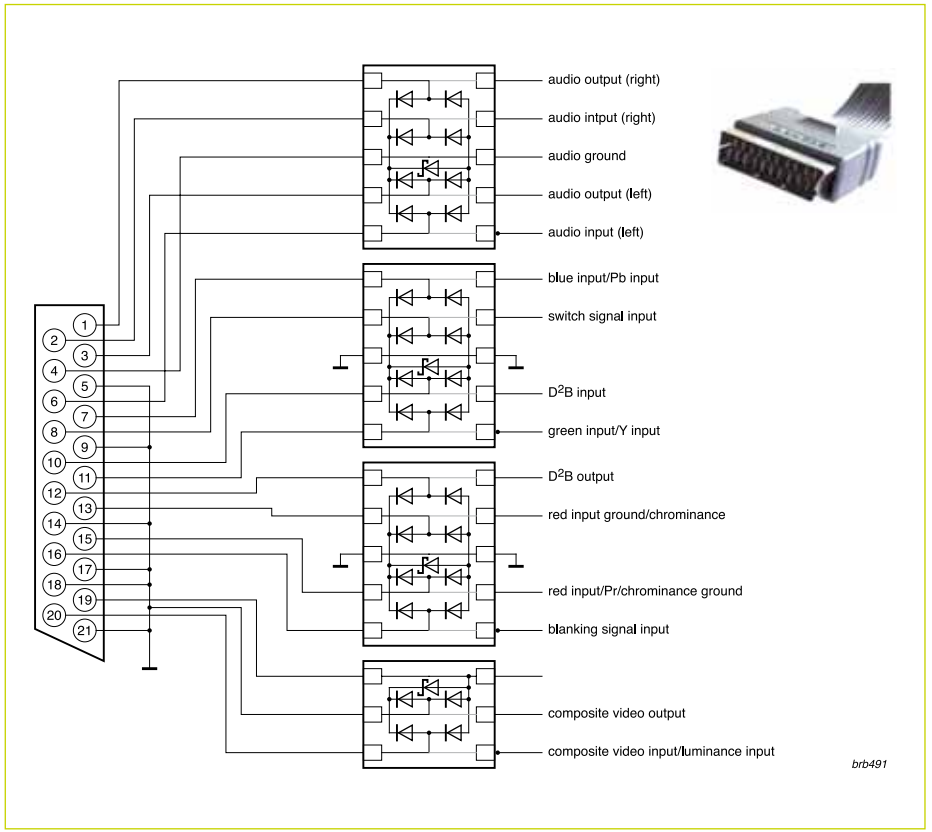


### ESD protection for YC, YPbPr, audio L/R, RGB, and other interfaces

For A/V interfaces, we recommend the integrated solutions IP4283, IP4282, IP4220 or IP4221-S/XS. For audio interfaces, use the PESD5V0S1BB. For SVHS, use the PESD5V0S1UB, and for SCART/YPbPr interfaces, use either the PESD5V0S5UD or the PESD5V0L7BS.

# 4. Analog audio and video interfaces

### TV side panel protection example

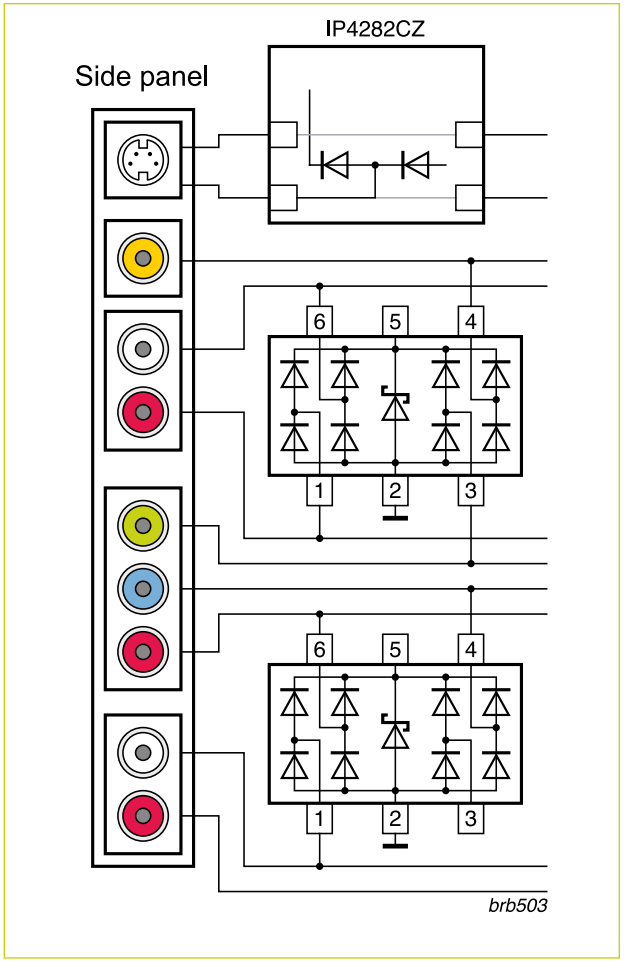


### ESD protection with level shifters/buffers for VGA interfaces

For designs that include a VGA input connector that may connect to the video output of a PC, we recommend the integrated solutions listed in the table. These devices combine ESD protection and sync signal buffering in a single package.

Other options include the IP4283CZ10 and PRTR5V0U8S as well as the discrete solution PESD5V0S1UB, which is housed in an SOD523 package.

| Part number | Features |
|---|---|
| IP4773CZ14: Sync buffer Rout = 10 Ω | ▸ IEC61000-4-2, level 4<br>▸ H-sync buffer<br>▸ V-sync buffer |
| IP4774CZ14: Sync buffer Rout = 10 Ω | ▸ IEC61000-4-2, level 4<br>▸ H-sync buffer |

# 5. HDMI interface

Our support for the High Definition Multimedia Interface (HDMI) extends through a wide range of products, from transmitters and receivers to switches and ESD protection. Designers can leverage our extensive knowledge of system design, for fast development of high-definition applications.

## 5.1 HDMI switches

### Recommended HDMI switch devices

| | TDA19995 | TDA19997 | TDA19998 |
|---|---|---|---|
| NB inputs | 3:1 | 4:1 | 4:1 |
| 5th EDID | Yes | Yes | Yes |
| F3 technology | No | No | Yes |

### HDMI switch TDA19998

This advanced 4:1 switch accepts a bit rate of 2.25 giga-samples per second on each input, which enables it to support full HD formats such as 1080p at 60 Hz, in the 12-bit Deep Color mode as defined in the HDMI standard. It supports color depth processing at 24, 30, and 36 bits (3 x 12-bit), offers automatic power management, and, along with the four EDIDs needed for HDMI input, embeds a fifth EDID for an additional VGA input. It includes ESD protection on its inputs, as well as DDC buffers.

### TDA19998 application example using the demonstration board

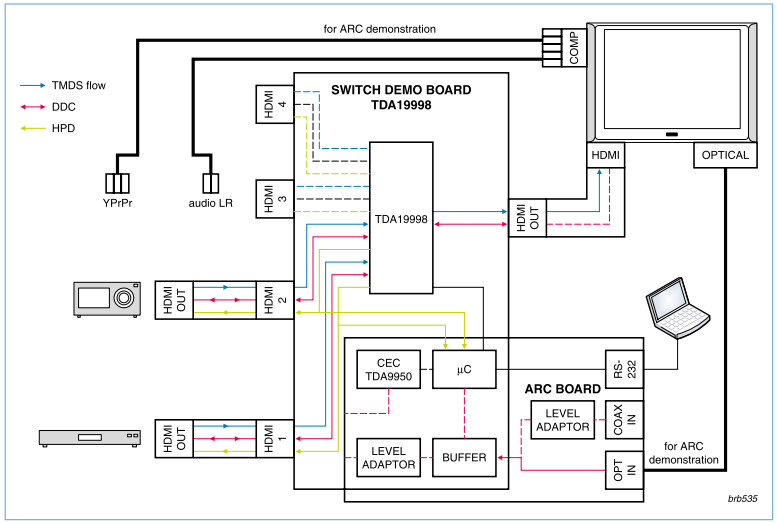


### Features

- Fast switch
- Built on NXP HDMI standards expertise
- HDMI compatible (HDMI Ethernet Channel voltage, Audio Return Channel)
- Reference design compliance verified
- Respect of HDCP rule (encrypted output)
- Enables design of HDMI source compliant products

### Benefits

- Fast switching performance
- Low power consumption
- Pass-through for HDCP-encrypted streams

# 5. HDMI interface

## 5.2 HDMI receivers

For designs that need an HDMI receiver, NXP also offers the 3-input HDMI receiver TDA19977A and the 4-input HDMI receiver TDA19978A.

### Quad HDMI receiver interface with equalizer TDA19978A

#### Features

- HDTVs up to 1080p, PCs up to UXGA
- Complies with the HDMI, DVI 1.0, CEA-861-D and HDCP 1.4 standards
- Four (quad) independent HDMI inputs, up to the HDMI frequency of 205 MHz
- Embedded auto-adaptive equalizer on all HDMI links
- EDID memory: 253 shared bytes and three bytes dedicated to each HDMI input
- Supports color depth processing 8-, 10-, or 12-bit per color
- Color gamut metadata packet with interrupt on each update, readable via the I²C-bus
- Up to four SPDIF or I²S-bus outputs (eight channels) at a sampling rate up to 192 kHz with IEC 60958/IEC 61937 stream
- HBR audio stream support up to 768 kHz with four demultiplexed SPDIF or I²S-bus outputs
- HBR streams (compatible with DTS-HD master audio and Dolby TrueHD up to eight channels due to HBR packet for stream with a frame rate up to 768 kHz) support
- DSD (as in SA-CD) and DST (as in SA-CD) audio stream up to six DSD channels output for SACD with DST Audio Packet
- Channel status decoder supports multi-channel reception
- Improved audio clock generation using an external reference clock
- Embedded oscillator (an external crystal can be used)
- Frame and field detection for interlaced video signal
- Sync timing measurements for format recognition
- Improved system for measurements of blanking and video active area allowing an accurate recognition of PC and TV formats
- HDCP with repeater capability
- Embedded non-volatile memory storage of HDCP keys
- Programmable input signal color space conversion from RGB-to-YCbCr or YCbCr-to-RGB
- Output formats: RGB 4:4:4, YCbCr 4:4:4, YCbCr 4:2:2 semi-planar based on the ITU-R BT.601 standard and YCbCr 4:2:2 ITU-R BT.656

#### TDA19978A block diagram

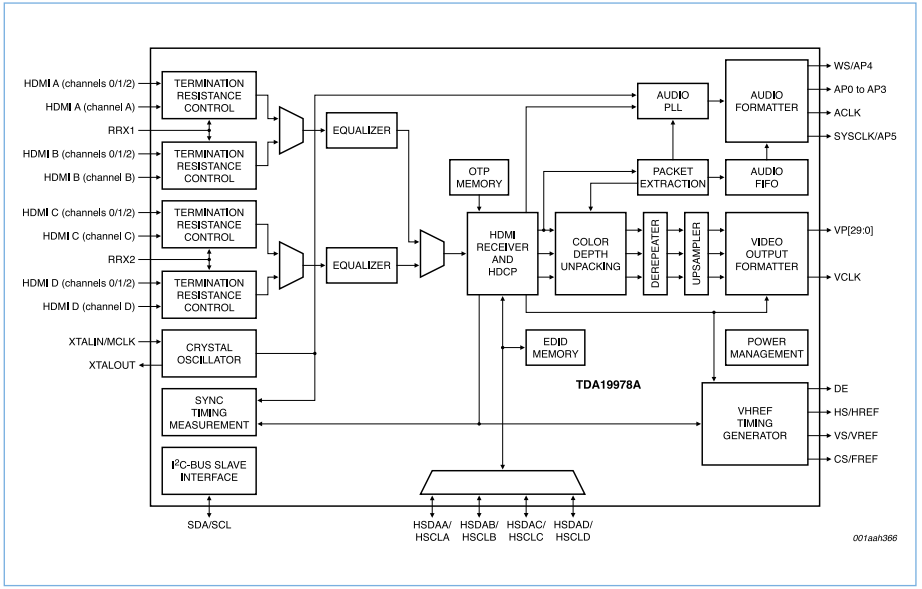

# 5. HDMI interface

## 5.3 CEC controller

The TDA9950 offers a simple way to add CEC function to a design. It translates CEC messages to $I^2C$ and vice-versa, and manages all the timing and error-control aspects of CEC. All designers need to do is modify the main system software to support creation and reception/interpretation of messages in $I^2C$ format.

## 5.4 ESD protection

The IP4776CZ38 protects HDMI and DVI signals. Depending on layout constraints, the IP4280CZ10, IP4283CZ10, IP4282CZ6, IP4221CZ6, or PRTR5V0U4D are also available, as is the PESD5V0F1BL in SOD882. The IP4776CZ38 integrated ESD protection circuit also includes buffer capabilities.

| Part number | Features |
|---|---|
| IP4776CZ38 | 8 kV ESD IEC<br>DDC level shifting<br>Hot Plug back drive<br>CEC back drive |

# 6. Smart-card reader interface

## Selection guide for smart-card reader ICs

| | Analog interface | | |
|---|---|---|---|
| **Product features** | **TDA8024** | **TDA8034** | **TDA8035** |
| Number of card slots | 1 | 1 | 1 |
| ISO7816 UART | no | no | no |
| ISO7816 timers | no | no | no |
| µC core | - | - | - |
| ROM [kbyte] / RAM [byte] | - | - | - |
| Flexible sequencer programming | no | no | no |
| Host interface | IO | IO | IO |
| ESD protection on ISO contacts (kV) | 6 | 6 | >8 |
| Auxiliary protected lines for C4 & C8 lines | 2 | 2 (on 24 pins package) | 2 |
| $V_{cc}$ card (V) | 3, 5 | 1.8, 3, 5 | 1.8, 3, 5 |
| Card supply current at $V_{cc}$= 5 V (mA) | 80 | 65 | 65 |
| Card supply current at $V_{cc}$= 3 V (mA) | 65 | 65 | 65 |
| Card supply current at $V_{cc}$= 1.8 V (mA) | - | 65 | 35 |
| Card supply current at $V_{cc}$= 1.2 V (mA) | - | - | - |
| Card clock frequency max (MHz) | 26 | 26 | 26 |
| Card activation time max (µs) | 225 | 3500 | 3400 |
| Card deactivation time max (µs) | 100 | 90 | 90 |
| **Protocol support** | | | |
| Synchronous card management | yes | yes | yes |
| Asynchronous cards (T=0 1 , T=1) | yes | yes | yes |
| **Security features** | | | |
| Voltage supervisor and over-current detection | yes | yes | yes |
| Current protection on $V_{cc}$, IO, RST, CLK | yes | yes | yes |
| **Additional product information** | | | |
| Power supply interface $V_{DDI}$ (V) | - | 1.6 - 3.6 | 1.6 - 3.6 |
| Power supply (V) | 2.7 - 6.5 | 2.7 - 5.5 | 2.7 - 5.5 |
| Power down current max (µA) | - | 12 | 1 |
| Temperature range (°C) | -40 / +85 | -25 / +85 | -25 / +85 |
| Package | SO28, TSSOP28 | HVQFN24, SO16 | HVQFN32 |
| Software libraries (EMV 4.2) | - | - | - |
| NDS compliance | yes | yes | yes |
| EMV compliance | EMV 4.2 | EMV 4.2 | EMV 4.2 |

# 6. Smart-card reader interface

## Smart-card reader ICs TDA8024 and TDA8034

These are complete, cost-efficient analog interfaces for asynchronous smart cards. They provide all the supply, protection, and control functions between a smart card and the microcontroller. The TDA8034 is the same as the TDA8024, but without a DC/DC converter. They are available with demo kits.

The TDA8024 and TDA8034 are both NDS and EMV 4.2 compliant, and they both can supply a $V_{CC}$ of 5 V to the smart card. The system supply voltage influences device selection. Use the TDA8034 when the system supply voltage is 5 V +/- 3%. This will ensure that the card $V_{CC}$ value is a minimum of 4.75 V with a current load of 65 mA. In systems that can only supply a voltage of 5 V +/- 10%, the TDA8024 is a better choice, because it can guarantee a proper value on $V_{CC}$ = 5 V. The TDA8034 is available in a 24-pin HVQFN or, to meet low-cost requirements, can be housed in a 16-pin SO package. The TDA8034 is not pin-compatible with the TDA8024, which has 28 pins.

## Smart-card reader interface TDA8034

- TDA8024 without DC/DC
- Smaller package HVQFN24 & SO16
- NDS compliant (depending on package option)
- EMV compliant
- BCAS compliant
- 1.8, 3, and 5 V cards supported (on 24-pin version)
- 3 full-duplex I/O lines
- Synchronous clock division supported 8/4/2/1
- Interface voltage $V_{DDI}$ down to 1.6 V
- LDO instead of DC/DC means that $V_{DDP}$ should be >4.85 V to guarantee $V_{CC}$ = 4.75 V min with 65 mA load
- On board oscillator or possibility to use external clock source on XTAL1
- Shutdown mode on both packages
- Deep shutdown on HVQFN24 (<10 µA)

## TDA8034 block diagram

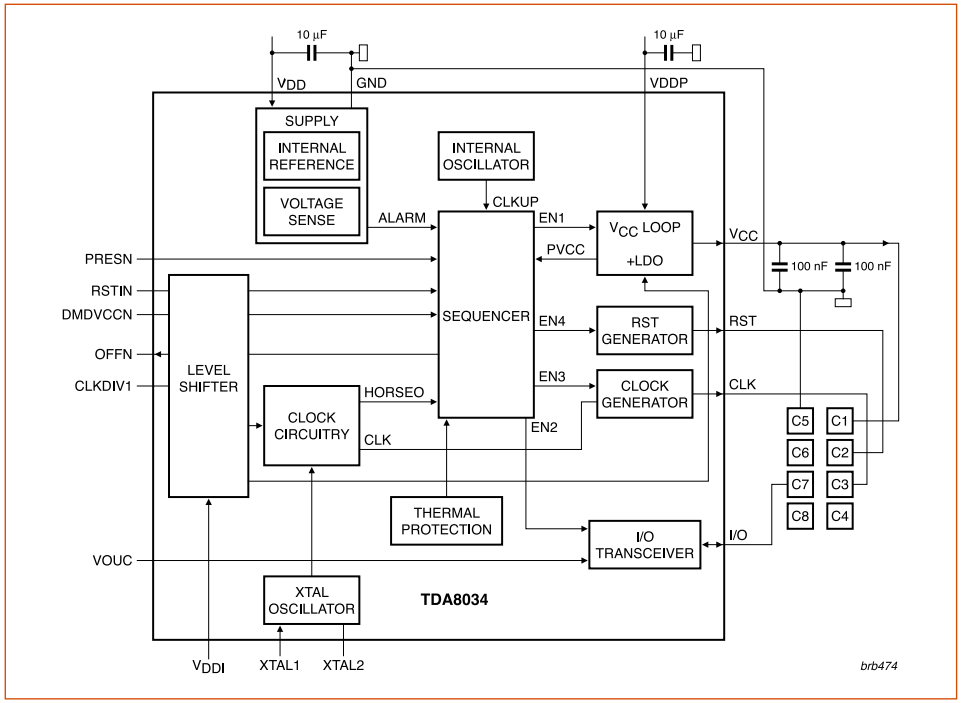

# 6. Smart-card reader interface

## Smart-card reader interface TDA8035

- Integrated circuit smart-card interface in an HVQFN32 package
- Smart-card supply: 1.8, 3, or 5 V
- DC/DC converter for $V_{CC}$ generation powered separately with 2.7 to 5.5 V supply ($V_{DDP}$ and GNDP)
- Thermal and short-circuit protections on all card contacts
- Automatic activation and deactivation sequences (initiated by software or hardware in the event of a short-circuit, card take-off, overheating, $V_{REG}$ $V_{DD}$(INTF), or $V_{DDP}$ dropping)
- Enhanced ESD protection on card side (>8 kV)
- External clock input up to 26 MHz
- Compliant with ISO 7816, NDS and EMV 4.2 payment systems
- Built-in de-bouncing on card presence contact
- Multiplexed status signal using pin OFFN
- Internal regulator
- Default shutdown in standby for reduced power consumption
- Deep shutdown mode (<1 µA)
- Chip Select digital input for parallel operation of several TDA8035 ICs.

## TDA8035 block diagram

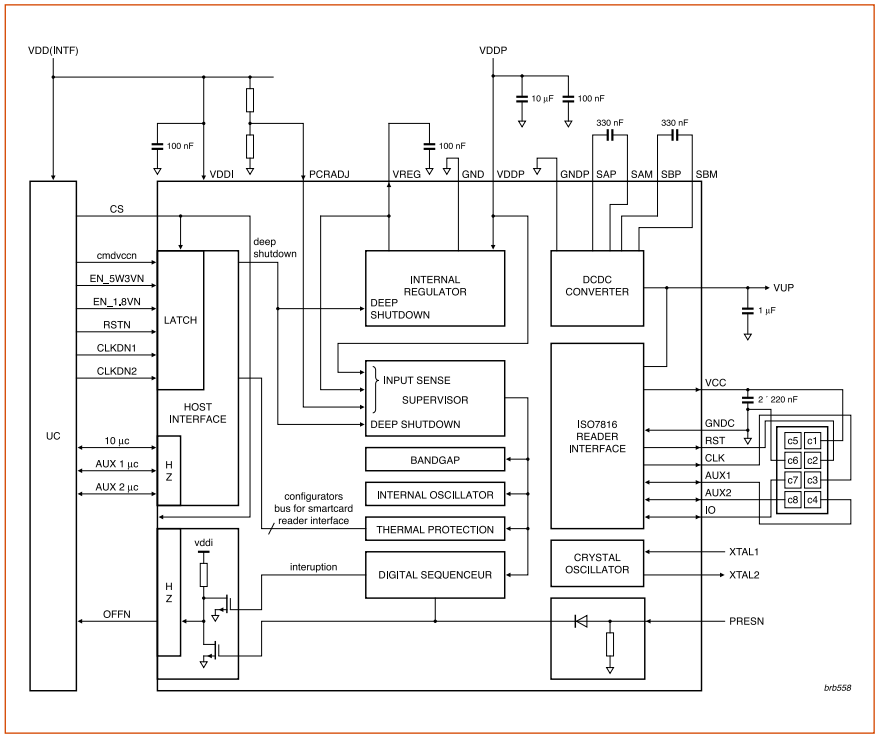

# 6. Smart-card reader interface

## Comparison of TDA8024, TDA8034, and TDA8035

| Feature | Condition | TDA8024T or TDA8024TT | TDA8034HN | TDA8034T | TDA8034AT | TDA8035HN |
|---|---|---|---|---|---|---|
| Package | | SO28 or TSSOP28 | HVQFN24 | SO16 | SO16 | HVQFN32 |
| Smart-card supply voltage | | 3, 5 V | 1.8, 3, 5 V | 3, 5 V | 3, 5 V | 1.8, 3, 5 V |
| Power block type | | DC/DC | LDO | LDO | LDO | DC/DC |
| Supply voltage (power) $V_{DDP}$ | $V_{cc}$= 5 V, ± 5%, $I_{cc}$= 80 mA | 4 to 6.5 V | 4.85 to 5.5 V | 4.85 to 5.5 V | 4.85 to 5.5 V | 2.7 to 5.5 V |
| | $V_{cc}$= 5 V, ± 5%, $I_{cc}$= 30 mA | 3.3 to 6.5 V | 4.85 to 5.5 V | 4.85 to 5.5 V | 4.85 to 5.5 V | 2.7 to 5.5 V |
| Supply voltage (interface) $V_{DDI}$ | | 2.7 to 6.5 V | 1.6 to 3.6 V | 1.6 to 3.6 V | 1.6 to 3.6 V | 1.6 to 3.6 V |
| Supply voltage (interface & or digital) $V_{DD}$ | | 2.7 to 6.5 V | 2.7 to 3.6 V | 2.7 to 3.6 V | 2.7 to 3.6 V | NA |
| Supervision of supplies | | $V_{DD}$ | $V_{DDI}$ & $V_{DD}$ | $V_{DDI}$ & $V_{DD}$ | $V_{DDI}$ & $V_{DD}$ | $V_{DDI}$ & $V_{DD}$ |
| Number of bidirectional IO lines | | 3 | 3 | 1 | 1 | 3 |
| Number of presence detection pins | | 2 (PRES & PRESN) | 1 (PRESN) | 1 (PRESN) | 1 (PRESN) | 1 (PRESN) |
| Clock source | | XTAL or external | XTAL or external | XTAL or external | XTAL or external | XTAL or external |
| Clock division ratio | | 1/2/4/8 | 1/2/4/8 | 2/4 | 1/2 | 1/2/4/8 |
| Automatic shutdown mode | | no | yes | yes | yes | yes |
| RST enabled in the activation sequence | activation sequence, t5 | 220 µs max | 3.4 ms (wake-up time) | 3.4 ms (wake-up time) | 3.4 ms (wake-up time) | 3.4 ms (wake-up time) |
| PORadj pin | | yes | yes | no | no | yes |
| NDS certification | | yes | yes | no | no | yes |
| EMV 4.2 compliance | | yes with filter on I/O line | yes | yes | yes | yes |

# 7. Data transfer interfaces

## 7.1 High-speed data switches

Increasingly, TV sets use multiple USB, USB 3.0, and SATA interfaces, to connect several internal and external solid-state storage devices or hard-disk drives.

### High-speed USB 3.0, PCI-e, DisplayPort, and SATA switches CBTL0xxxx

NXP supplies an extensive family of high-speed data switches, suitable for data rates of 5 Gbps or higher, as specified by USB 3.0, PCI-e, SATA, and DisplayPort.

### Differential multi-channel 2:1 high-speed multiplexer/demultiplexer switches

| Type number | Number of differential channels | Signal switching speed | $V_{DD}$ operating range | Package | Standard data rate supported |
|---|---|---|---|---|---|
| CBTL02042 | 2 | 5 Gb/s | 3.3 V ±10% | DHVQFN20 | PCIe Gen 2 DisplayPort 1.1a USB 3.0 SATA 3 Gb/s |
| CBTL04082 | 4 | 5 Gb/s | 3.3 V ±10% | HVQFN42 | PCIe Gen 2 DisplayPort 1.1a USB 3.0 SATA 3 Gb/s |
| CBTU04082 | 4 | 5 Gb/s | 1.8 V ±10% | HVQFN42 | PCIe Gen 2 DisplayPort 1.1a USB 3.0 SATA 3 Gb/s |
| CBTL02043 | 2 | 8 Gb/s | 3.3 V ±10% | DHVQFN20 | PCIe Gen 3 DisplayPort 1.2 USB 3.0, SATA 6 Gb/s |
| CBTL04083 | 4 | 8 Gb/s | 3.3 V ±10% | HVQFN42 | PCIe Gen 3 DisplayPort 1.2 USB 3.0, SATA 6 Gb/s |
| CBTU04083 | 4 | 8 Gb/s | 1.8 V ±10% | HVQFN42 | PCIe Gen 3 DisplayPort 1.2 USB 3.0, SATA 6 Gb/s |

### USB 2.0 switch NX3DV221

This switch, housed in an XQFN10U package, is a dual SPDT analog switch designed for use with USB 2.0 high-speed (480 Mbps) signals in applications with limited USB I/O. The wide bandwidth (1.1 GHz) allows signals to pass with minimal edge and phase distortion. The switch is bidirectional and offers little or no attenuation at the outputs. Designed for low bit-to-bit skew and high channel-to-channel noise isolation, it is ideally suited for use in any high-bandwidth application.

### Features

- Operating supply: 2.3 to 3.6 V
- Switch inputs: up to 5.5 V
- Supply current ICC <2 µA in low-power mode
- On resistance RON <6.0 Ω
- Typical CS(ON) = 6.0 pF
- High bandwidth f(-3 dB) = 1.0 GHz

### NX3DV221 functional diagram

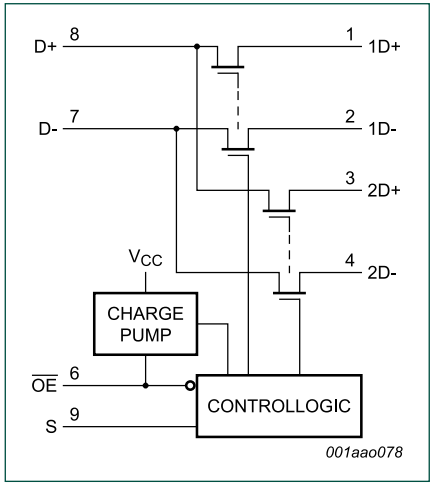

# 7. Data transfer interfaces

## 7.2 ESD protection for USB

For designs that use a USB interface – to connect permanent data storage devices using flash memory, for example – we offer a range of protection devices. In addition to the IP4282 and IP4234, listed below, the PESD5V0X1BL, PRTR5V0U2D, PRTR5V0U2AX, PRTR5V0U4D, PRTR5V0U2F can also be used. Other options for USB, such as alternative packaging (including CSP), flow-through routing, different capacitance ratings, and support for On-The-Go (OTG) are also available.

### ESD protection device IP4282 with pass-thru routing

Simply place this UTLP device on top of the signal lines to provide ESD protection. No additional PCB space is consumed, and there's no need for special routing. The extremely short distance between the ESD diodes and the signal lines ensures very fast reaction times.

### Application of IP4282 for USB

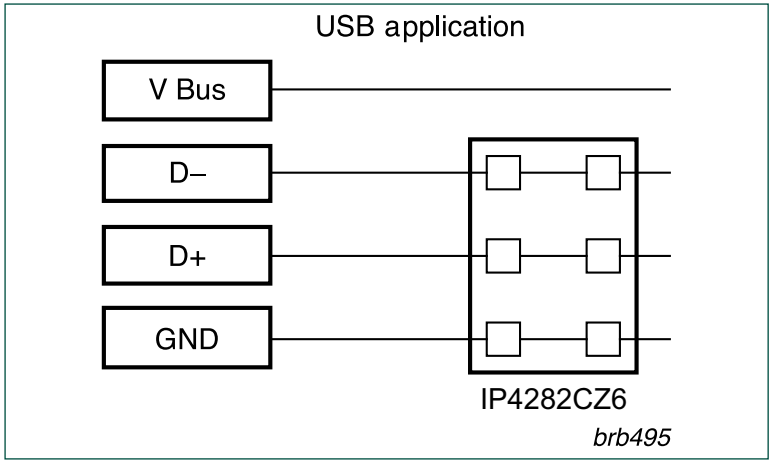


### ESD protection device IP4234 with pi-filter concept

This device delivers excellent clamping performance and extremely high robustness against ESD pulses (15KV IEC 61000-4-2 contact).

### Application of IP4234 for USB

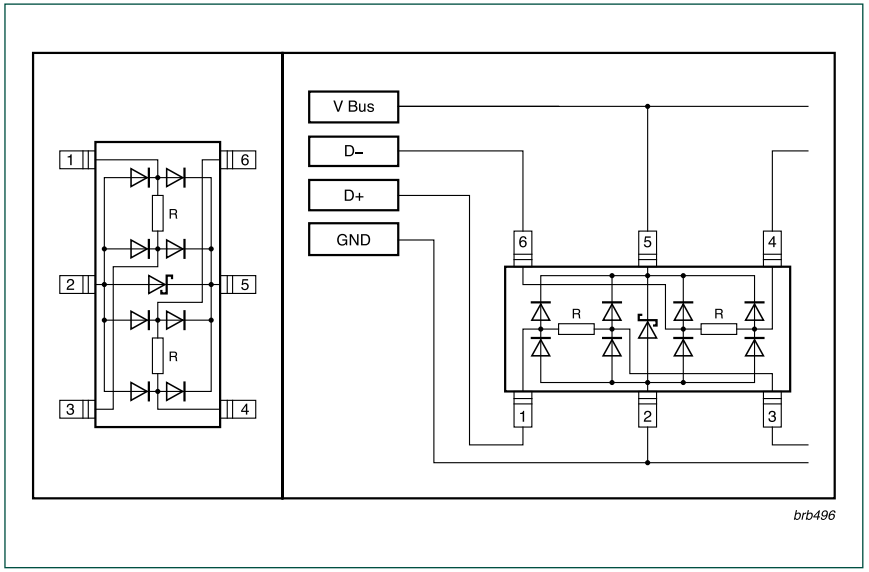

# 7. Data transfer interfaces

## 7.3 ESD protection for USB 3.0

### ESD protection device IP4284CZ10

Use this device, which has an extremely low capacitive load, to create an impedance design that protects the high transfer speeds (up to 5 Gpbs) of USB 3.0.

### Features

- 4 channels
- Straight-through routing
- Only 0.5 pF
- Very small footprint with SOT1059 (XSON10)
- Leaded TSSLP10 package also available
- Excellent signal integrity
  - 0.05 pF line-to-line matching
  - -70 dB differential crosstalk at 2.5 GHz
- ESD protection of ±8 kV according to IEC61000-4-2, level 4

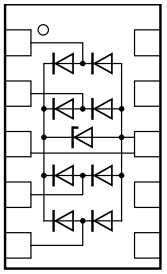

brb537

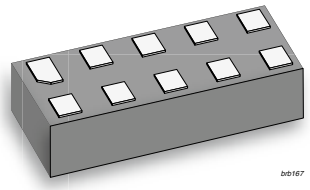

brb167

For designs that use a combi-connector (USB 2.0 + 3.0), the IP4282CZ6 can be used in combination with the IP4284CZ10.

### Application example with USB 2.0 + USB 3.0 combi connector

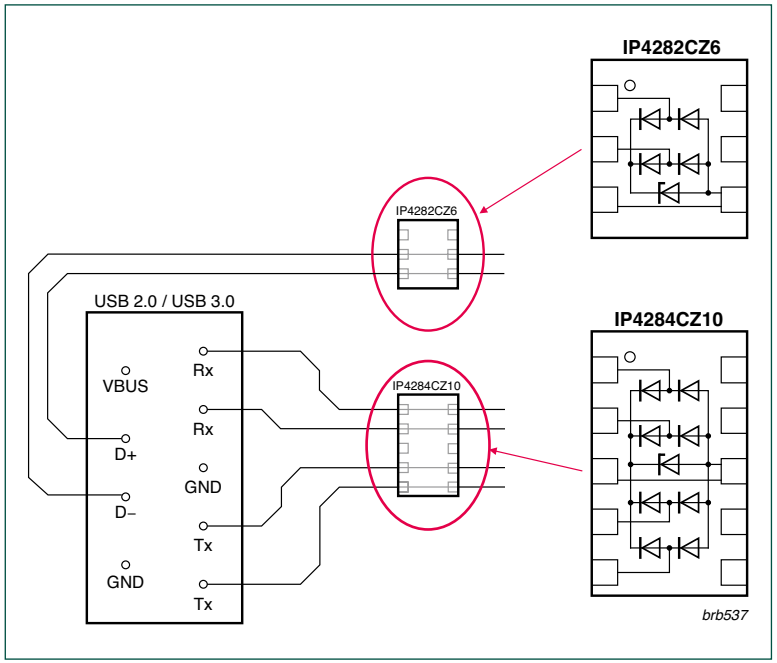

# 7. Data transfer interfaces

## 7.4 ESD protection for SATA, eSATA

In designs that use a hard disk drive equipped with a SATA or eSATA interface, we recommend the IP4284CZ10.

**Typical use of IP4284 in SATA**

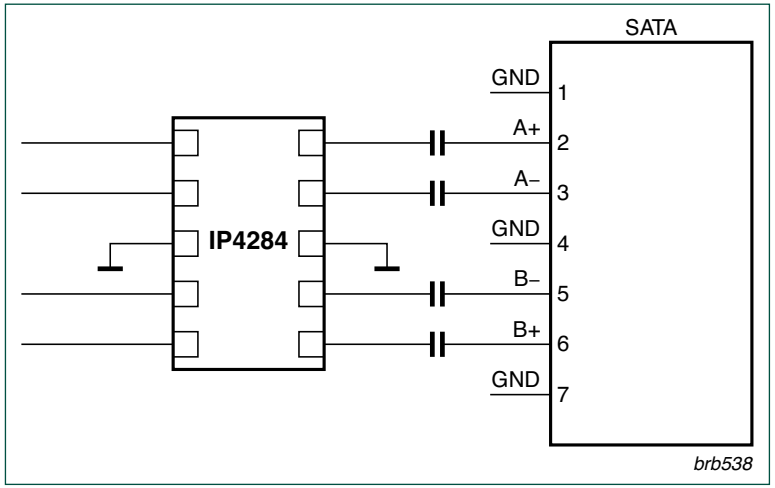


## 7.5 ESD protection for Ethernet

For designs that include an Ethernet interface, we recommend the IP4233CZ6. Alternatively, the IP4280 or the IP4220/3 can be used. To protect high-speed Gigabit Ethernet, use the PRTR5V0U4D.

**Ethernet interface protection example**

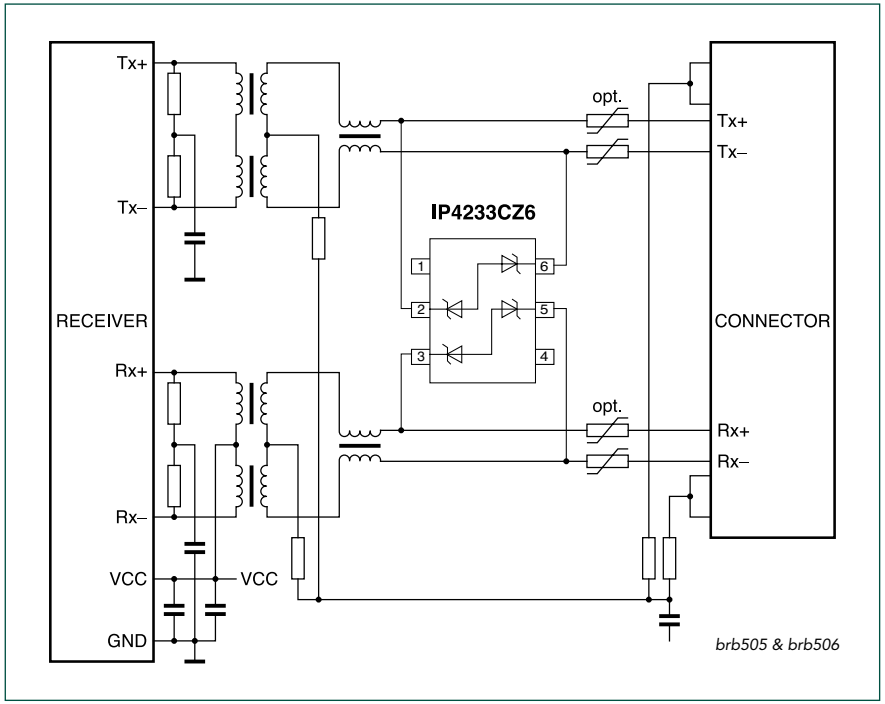

# 7. Data transfer interfaces

## 7.6 ESD protection and EMI filtering for SD Card and other low/medium-speed interfaces

Our integrated ESD protection devices, which include EMI filtering, are well suited for use with multi-channel interfaces such as SD/SDHC, medium-speed interfaces such as LCD displays, and low-speed interfaces such as keyboards. To protect an SD card connector, for example, use the IP4253, which is available with 4, 6, or 8 channels, or the IP4254. For memory-card interfaces, we recommend the PESD5V0L4UG or the PESD5V0V4UW.

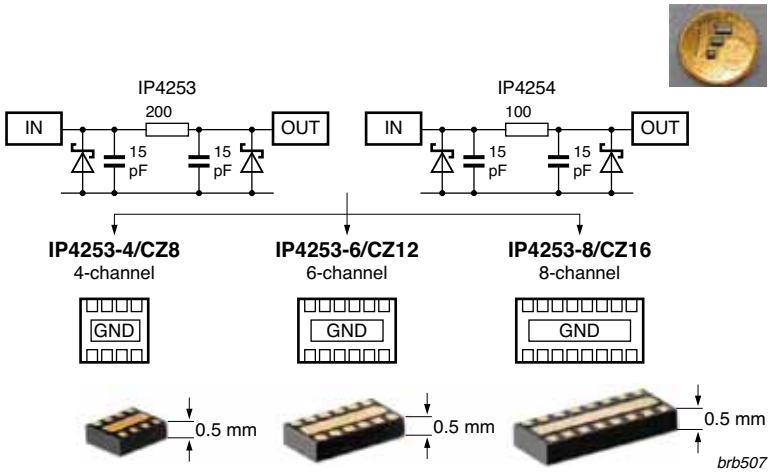

# 8. Interfaces and control

## 8.1 8/16/32-bit microcontrollers

We offer highly-integrated and cost-effective microcontrollers, from the smallest 8-bit to the highest performing 32-bit ARM solutions.

The LPC111x family, based on Cortex-M0, is an excellent choice for standby microcontroller tasks. It can be used for power management, system and human interface monitoring (including remote control and keypad), signaling, LEDs, and more. The family delivers the outstanding performance of a 32-bit architecture, with best-in-class power consumption, and the optimized code footprint enables memory cost reduction.

The NXP approach lets designers work with a single ARM development environment to cover all their processing needs, from ARM7 and ARM9 to Cortex-M. Our portfolio also includes an industry-leading selection of enhanced 80C51.

**Read more**
Web page
www.ics.nxp.com/microcontrollers

Selection guide
www.ics.nxp.com/literature/other/microcontrollers/pdf/line.card.pdf

## 8.2 I²C GPIO expanders

Our GPIO expanders make it easy to increase the number of I/O using the I²C-bus. Add inputs for a keypad, a switch, signal monitoring, or fan control, or add outputs for LED control, an ACPI power switch, a relay, timers, or sensors.

Combat "feature creep" by increasing the number of I/O ports instead of adding a new microcontroller. Or, enable seamless migration to a newer microcontroller and still keep the same peripherals. Using expanders eliminates costly, congested PCBs, since a trace or wire isn't needed for each signal.

NXP offers an extremely wide selection. We have 4-, 8-, 16-, and 40-bit formats, support quasi-directional and push-pull outputs, and offer options with interrupts and/or resets — all in a wide range of packages.

| # of Outputs | Interrupt | Reset | Interrupt & reset | 2 kbit EEPROM | Interrupt & 2 kbit EEPROM |
|---|---|---|---|---|---|
| **Quasi ouput (25 ma sink and 100 uA source)** | | | | | |
| 8 | PCF8574/74A, PCA8574/74A, PCA9674/74A | PCA9670 | PCA9672 | PCA9500/58 | PCA9501 |
| 16 | PCF8575/75C, PCA9675 | PCA9671 | PCA9673 | - | - |

# 8. Interfaces and control

## 8.3 User-interface controls

In addition to I/O expanders, NXP offers capacitive sensing devices for use with control buttons and keyboards.

### Capacitive proximity switch PCF8883T

This device supports innovative, ultra-slim TV designs that use hermetically sealed keys on a keyboard or switches placed under glass.

### Features

- Dynamic proximity switch
- Digital processing method
- Adjustable sensitivity, with very high limits
- Adjustable response time
- Wide input capacity range (10 to 60 pF)
- Automatic calibration
- Configurable output: push-button, toggle, pulse
- Wide voltage range ($V_{DD}$ = 3 to 9 V)
- SOIC8 package (for larger volumes, other options are available on request)

### PCF8883 block diagram

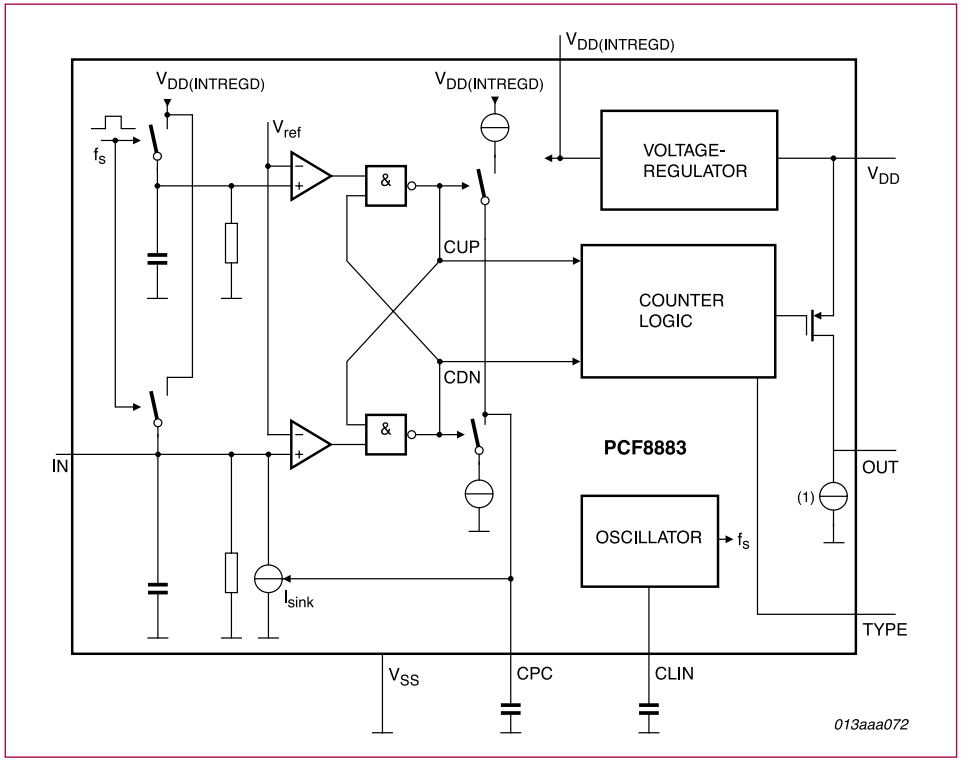

# 8. Interfaces and control

## 8.4 LED controllers

We also offer LED dimmers for use with the signalling LEDs found in most TV designs.

### Features

- Three LED driver states (on, off, flashing at a programmable rate)
- Two selectable, fully programmable blink rates (frequency and duty cycle) between 0.591 and 152 Hz (1.69 seconds and 6.58 milliseconds)
- 256 brightness steps
- I/O not used as LED drivers can be used as regular GPIO
- Internal oscillator requires no external components
- I²C-bus interface is logic-compatible with SMBus
- Internal power-on reset

| Type number | |
|---|---|
| PCA9530 | 2-bit I²C LED dimmer, 2 HW selectable addresses |
| PCA9531 | 8-bit I²C LED dimmer, 8 HW selectable addresses |
| PCA9532 | 16-bit I²C LED dimmer, 8 HW selectable addresses |
| PCA9533 | 4-bit I²C LED dimmer |

### PCA9530 block diagram

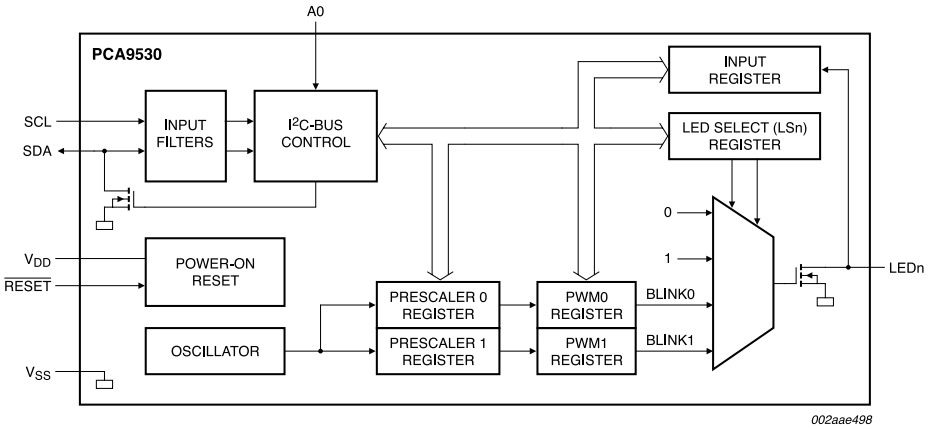

# 8. Interfaces and control

## 8.5 I²C temperature sensors

These devices can be used in power supplies and panel backlight sections of TV sets. They can also be used to check the temperature of power consuming image processing ICs, to determine the temperature or define the window for an action, such as an interrupt, an alarm, fan control, or shutdown. We offer a large selection of commonly used sensors, in a wide array of package types.

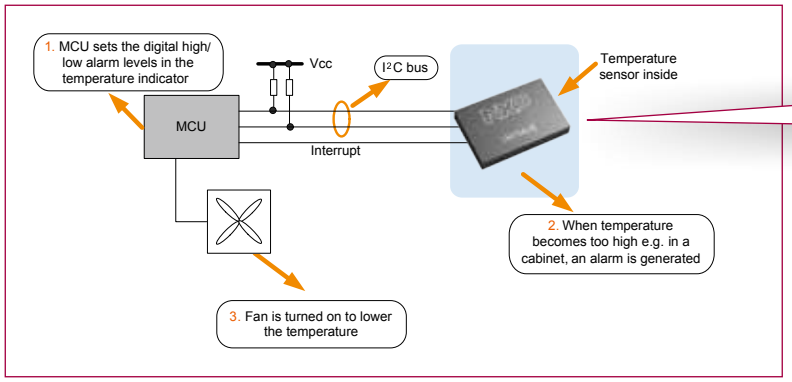


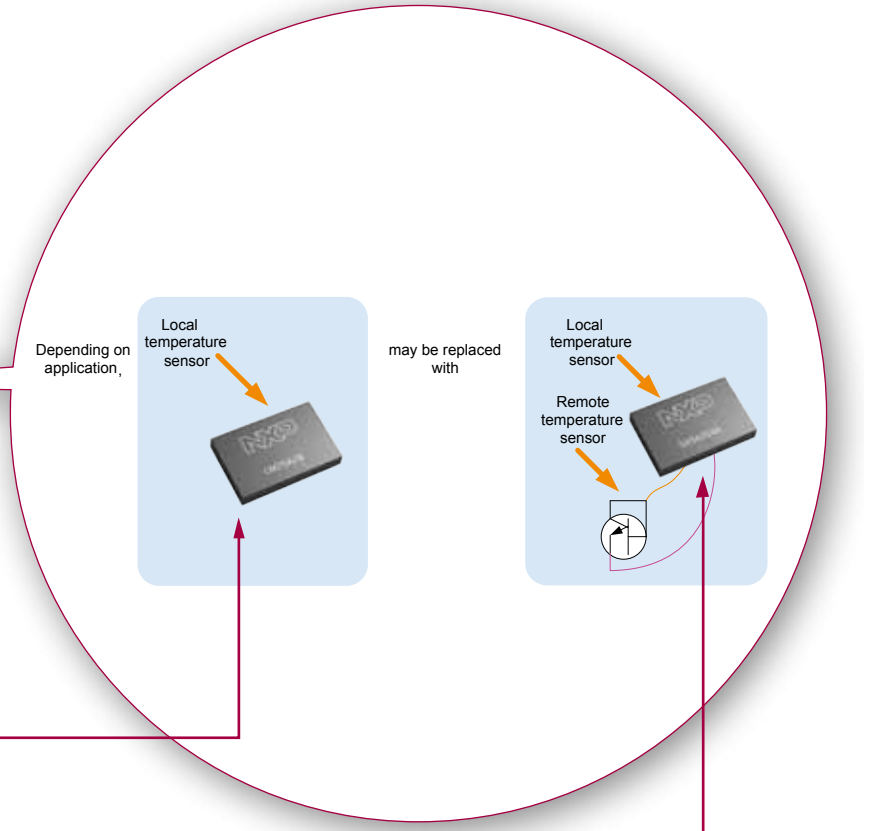


| Local sensors | |
|---|---|
| LM75A/B | ±2 °C local (thermal Watchdog, -55 to +125 °C) |
| SE95 | ±1 °C local (thermal Watchdog, -55 to +125 °C) |
| SE97 | ±1 °C local (thermal Watchdog, 2 kbit EEPROM, -20 to +125 *C) |

| Local and remote sensors | |
|---|---|
| NE1617A | ±2 to ±3 °C (0 to +125 °C) |
| NE1619 | ±2 to ±3 °C (voltage monitor, 0 to +125 °C) |
| SA56004X | ±2 to ±1 °C (alarms, -40 to +125 °C) |

# 8. Interfaces and control

### Local digital temperature sensor and thermal Watchdog timer LM75B

This highly integrated device provides advanced performance in a cost-effective format and is available in a package that measures only 2 x 3 mm.

### Features

- Pin-for-pin replacement for industry-standard LM75 and LM75A
- I²C-bus interface: up to 8 devices on the same bus
- Power supply range from 2.8 to 5.5 V
- Temperatures range from -55 to +125 °C
- Frequency range from 20 Hz to 400 kHz with bus fault time-out to prevent hanging up the bus
- 11-bit ADC with temperature resolution of 0.125 °C
- Temperature accuracy of
  - ±2 °C from -25 to +100 °C
  - ±3 °C from -55 to +125 °C
- Programmable temperature threshold and hysteresis set points
- Max supply current of 1.0 µA in shutdown mode
- Standalone operation as thermostat at power-up
- ESD protection exceeds 4500 V HBM per JESD22-A114 and 2000 V CDM per JESD22-C101
- Small 8-pin package types: SO8, TSSOP8, XSON8U and HWSON8

| Type number | Topside mark | Package | | |
|---|---|---|---|---|
| | | Name | Description | Version |
| LM75BD | LM75BD | SO8 | Plastic small outline package; 8 leads; body width 3.9 mm | SOT96-1 |
| LM75BDP | LM75B | TSSOP8 | Plastic thin shrink small outline package; 8 leads; body width 3 mm | SOT505-1 |
| LM75BGD | 75B | XSON8U | Plastic extremely thin small outline package; no leads; 8 terminals; UTLP based; body 3 x 2 x 0.5 mm | SOT996-2 |
| LM75BDP | M75 | HWSON8 | Plastic thermal enhanced very very thin small outline package; no leads; 8 terminals; 2 x 3 x 0.8 mm | SOT1069-2 |

# 8. Interfaces and control

## 8.6 I²C level shifters

These devices provide digital logic level translation between a host processor and a slave device. This is an important part of voltage level shifting, since the host processor's I²C voltage continues to go down while the voltages used by the peripheral devices remain unchanged. We offer a very large selection of active and passive level shifters, and have evolved our NVT20xx family to include widths of 1, 2, 3, 4, 6, 8, and 10 bits.

| Device | Description | Normal I/O | Static level offset I/O | Accelerator | Idle stop detect for hot swap | Interrupt | ESD (HBM) |
|---|---|---|---|---|---|---|---|
| PCA9507 | 2.7 to 5.5 V level shifter | A side | B side | • (A side) | | | 5 kV |
| PCA9508 | 0.9 to 5.5 V level shifter with offset free hot-swap | A side | B side | | • | | 6 kV |
| PCA9509 | 1.0 to 5.5 V level shifter | B side | A side | | | | 2 kV |
| PCA9517A | 0.9 to 5.5 V level shifter | A side | B side | | | | 5 kV |
| PCA9519 | 1.1 to 5.5 V quad level shifter | B side | A side | | | | 2 kV |
| PCA9527 | 3.0 to 5.5 V level shifter | A side | B side | • (A side) | | • | 8 kV |

# 8. Interfaces and control

## 8.7 I²C bridges (SPI, UART) and 16C-compatible UARTs

### SPI-to-I²C bridge SC18IS600/601

Control multiple I²C devices using a main processor equipped with an SPI interface, or use its I²C interface for other purposes. The SC18IS600 has a maximum SPI clock rate of 1 Mbps and uses an internal oscillator. The SC18IS601 has a maximum SPI clock rate of 3 Mbps and uses an external oscillator.

### Features

- SPI host interface
- I²C bus controller
- Multi-master capability
- 5 configurable I/O ports
- High-speed I²C: 400 Kbps
- 96-byte Rx and Tx FIFOs
- Operating range: 2.4 to 3.6 V
- Power-down mode with wakeup pin
- Small, 16-pin TSSOP package

### SC18IS601 block diagram

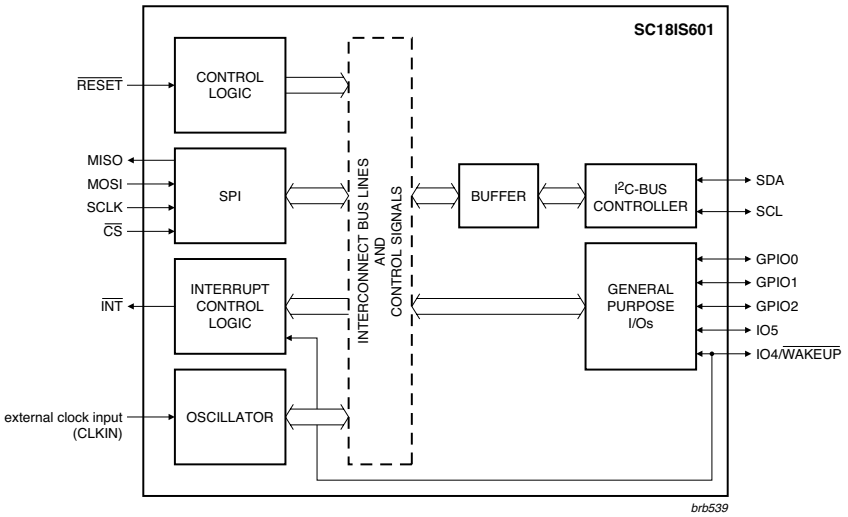

# 8. Interfaces and control

### UART-to-I²C bridge SC18IM700

Use this device to add an RS-232 interface to the design, or when implementing development, on-site debug, service, or maintenance functions.

### Features

- UART host interface
- I²C master bus controller
- High-speed RS-232 with baud rate up to 460.8 Kbps
- Fast-mode I²C with speed up to 400 kbps
- 16-byte Rx and Tx FIFO
- 8 programmable I/O pins
- Programmable baud rate generator
- Operating range: 2.3 to 3.6 V
- Input pins tolerant to 5 V
- Sleep mode (power down)
- I²C-like RS-232 Protocol in ASCII format
- Master, multi-master capability
- Fixed 8N1 RS-232 format (1 start, 8 data, 1 stop, no parity bit)
- Supports hardware reset
- After reset, the baud rate is 9600 bps (can then be changed via Baud Rate Generator)
- Wakeup pin
- Very small 16-pin TSSOP package

### 16C-compatible UARTs

Our UARTs, available with 1, 2, or 4 channels, deliver low-power operation with data rates up to 5 Mbps. They support 2.5, 3.3, and 5 V operation, and include IrDA for wireless links.

| Channel | FIFO byte | HVQFN-32 | HVQFN-48 | LFBGA-64 | LQFP64 |
|---|---|---|---|---|---|
| | | 5 x 5 x 0.85 | 6 x 6 x 0.85 | 6 x 6 x 1.05 | 7 x 7 x 1.4 |
| 1 | 16 | 16C550BIBS | | | |
| 1 | 32 | 16C650BIBS | | | |
| 1 | 64 | 16C750BIBS | | | |
| 2 | 16 | 16C2550BIBS | | | |
| 2 | 32 | 16C652BIBS | | | |
| 2 | 64 | 16C752BIBS | | | |
| 4 | 16 | | 16C554BIBS | | 16C554BIBM |
| 4 | 64 | | 16C654BIBS | 16C654BIEC | 16C654BIBM |
| 4 | 64 | | | | 16C754BIBM |

# 8. Interfaces and control

## 8.8 I²C real-time clocks (RTCs)

Our I²C portfolio includes high-accuracy RTCs that need no calibration, low-power RTCs that use less than 150 nA, and RTCs with an extended temperature range for reliable performance in the harshest conditions.

| Accurate RTCs | |
|---|---|
| PCF2127A | ±3ppm (typ) over -20 to +70 °C, calibrated at $V_{dd}$ = 3.3 V, I²C & SPI, RAM |
| PCF2129A | ±3ppm (typ) over -20 to +70 °C, calibrated at $V_{dd}$ = 3.3 V, I²C & SPI, cost-optimized |

| Low-power RTCs | |
|---|---|
| PCF8593 | Low power, 1/100 s resolution |
| PCF8583 | Low power, 240 scratch-pad RAM |
| PCF8563 | Very low power (250 nA) |
| PCF2123 | Extremely low power (as low as 100 nA), SPI, electronic frequency tuning register |

| RTCs with extended temperature range | |
|---|---|
| PCA8565 | Low power, extended temp range to 125 °C, I²C |
| PCA2125 | Extended temp range to 125 °C, SPI |

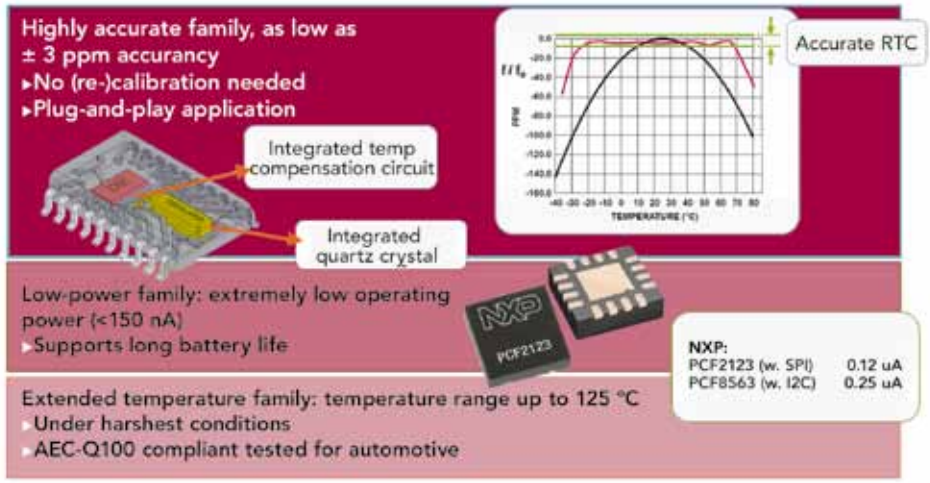

# 8. Interfaces and control

## 8.9 I²C design tools and tech support

As a leading provider of I²C solutions, we have one of the largest portfolios in the industry, with hundreds of options for all kinds of applications. We support all our I²C product families with an extensive array of development tools, application notes, sample designs, and discussion forums.

**I²C demo board I2C2005-1**

This kit is an easy-to-use tool for experimentation and training. It includes I²C-bus I/O ports, temperature sensors, LED drivers, and real-time clocks. It employs a USB interface to connect to a Windows PC or laptop and for power. To place an order, go to www.demoboard.com or visit eTools.

## 8.10 Logic functions

We offer a wide range of logic functions in state-of-the-art packages. Our portfolio includes the industry-leading HC/T and LVC families, our new AUP family, plus translator and bus functions.

Packages include the ultra-compact DQFN, HVQFN, MicroPak XSON, and PicoGate. The PicoGate format is especially useful for adding functions with minimal PCB rework or expansion. There are two versions of DQFN: one with accessible pads, for easy signal probes during system validation, test, and production, and one without access to signals, to prevent probes, for use in applications with higher security requirements.

## 8.11 Memory termination regulator

**DDR memory termination regulator NE578xx**

Designed for TV sets using DDR-type SDRAM, these devices include a standby mode and deliver enhanced efficiency.

**Features**

- Fast transient response time
- Over-temperature and over-current protection
- High bandwidth drivers minimize requirement for output hold-up filter capacitors
- Internal divider maintains termination voltage at 1/2 memory supply voltage

# 9. Discrete components for the main processing board

## 9.1 Power solutions

Since integrated circuits typically use a lower core supply voltage than interfaces and memory devices, most boards require a number of different supply voltages. Our power solutions include a variety of devices, including medium-power Schottky diodes, bipolar transistors, and MOSFETs, to help create efficient, cost-effective linear regulators and DC/DC converters.

- The PBSS4041PZ can be used as a linear PNP regulator to generate 2.5 and 1.5 V analog supplies. It delivers excellent gain up to 15 A ICM while supporting 5.7 A of continuous current.
- Supporting 1.2 or 1.8 V, the PMEG2005EH, PMEG4010EH, and PMEG4030ER are excellent options for the freewheeling Schottky diodes commonly used in DC/DC conversion.
- The BSP030, a 10 A, N-channel MOSFET in an SOT233 package, can be used as an external MOSFET for synchronous rectification.
- The TL431xxSDT series of shunt regulators, along with the BC847, a general-purpose transistor, are recommended for low-power, discrete linear voltage regulators.

| Schottky diodes | | Protection diodes | | MOSFETs | | BJTs | | Analog ICs | |
|---|---|---|---|---|---|---|---|---|---|
| PMEG2005EH | SOD123F | PTVS12VS1UR | SOT123W | BSP030 | SOT223 | PBSS306P2 | SOT223 | TL431xxSDT | SOT23 |
| PMEG4010EH | SOD123F | | | | | PBSS4041PZ | SOT223 | NX1117C/CE SERIES | SOT223 (SC73) |
| PMEG4030ER | SOD123W | | | | | | | | |

# 9. Discrete components for the main processing board

## 9.2 Special functions and general-purpose devices

To complement function-specific solutions, such as USB and audio-interface devices, we offer general-purpose discrete devices that are well suited for use on the main processing board.

For audio muting, there is the low-noise low $V_{CEsat}$ (BISS) transistor PBSS2515E, which is housed in an ultra-small SOT416 package, and the PBSS4140T, housed in the cost-efficient, high-volume SOT23 package.

Discrete PESD5V0xx protection diodes are also available for USB, memory, audio, video, and HDMI interfaces. Please refer to the specific chapters in this guide for details.

# 10. Components for the backlight and panel

## 10.1 LED drivers for panel backlight unit

Our LED backlight solutions use a power-efficient boundary conduction mode of operation. This enables use of a smaller inductor value and avoids reverse recovery losses in the freewheel diode. It also enables use of a single, loosely controlled input voltage for multiple LED strings.

### UBA3070 LED driver for TV backlight

**Features**

- Switch-mode buck converter capable of driving LED strings up to 600 V
- Direct PWM dimming
- Fast transient response through cycle-by-cycle current control
  - Prevents LED current over- and undershoots
- Zero-current switching at switch-on
- Zero-voltage or valley switching at switch-on
- Over-current and over-temperature protection, under-voltage lockout and leading edge blanking
- Available in DIP8 and SO8 packages

**UBA3070 pin configuration (SO8 and DIP8)**

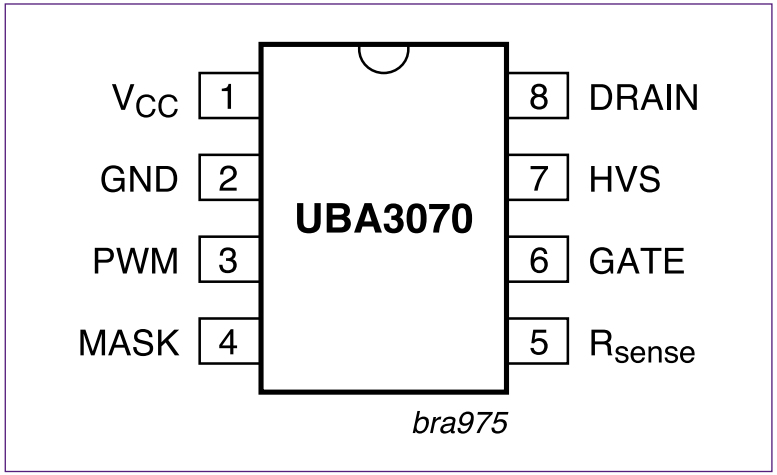

# 10. Components for the backlight and panel

## 10.2 Discretes for backlight and panel

Our discretes portfolio increases efficiency in LED backlight units. The high-voltage, low-voltage, and low $V_{CEsat}$ transistors enable cost-efficient emitter switches for high-voltage LED drivers and single switches in low-voltage LED strings. The small-signal MOSFETs are well suited for use in general-purpose single switches in low-voltage LED strings. The medium-power Schottky diodes can operate as freewheeling diodes that offer the lowest forward voltage drops, high power density, and superior efficiency.

Our discretes portfolio covers other functions, too, including power for LCD source drivers, LCD backplane and digital controls, charge pumps, and load switches from 1 to 3 A. For example, the Schottky diodes can be used for buck, boost, and negative/positive charge pumps. The low $V_{CEsat}$ transistors support high-current load switches and $V_{com}$ buffers, and the medium-power transistors can be used for external, low-power linear regulators.

| Medium-power, high-voltage, and low $V_{CEsat}$ transistors | | MOSFETs | |
|---|---|---|---|
| PBHV8115T | 150 V, 1 A, low saturation voltage, SOT23 | PMF280UN (N-Channel) | 20 V, 5 A 50 mΩ $R_{DSon}$, SOT23 |
| PBSS4540X | 40 V, 5 A low $V_{CEsat}$ transistor, SOT89 | PHT4NQ10LT (N-Channel) | 100 V, 3.5 A, 200 mΩ $R_{DSon}$, SOT223 |
| PBSS4120NZ | 30 V, 5.4 A, low $V_{CEsat}$ switching transistor, SOT223 | | |
| PMBT2222A(NPN) | 30 V, 600 mA, fast switching, SOT23 | | |

| Schottky diodes | | Zener diodes | | General purpose / digital transistors / low $V_{CEsat}$ transistors | | MOSFETs | | Analog ICs | |
|---|---|---|---|---|---|---|---|---|---|
| PMEG3020ER | SOD123W | BZX84J-series | SOD323F | PDTC114ET | SOT23 | PMK30XP | SOT96 (SO8) | TL431 | SOT23 |
| PMEG3020CEP | SOD128 | | | BC8x7B | SOT23 | BSN20 | SOT23 | NX1117C/CE series | SOT223 (SC73) |
| BAT54S | SOT23 | | | BCX868 | SOT89 (SC62) | BSP250 | SOT223 | | |
| | | | | BCP68 | SOT223 | | | | |
| | | | | PBLS2002S | SOT96 (SO8) | | | | |
| | | | | PBSS4021PZ | SOT223 | | | | |
| | | | | PBSS303PZ | SOT223 | | | | |
| | | | | PBSS4240DPN | SOT457 | | | | |

# 11. RF communication with remote control unit

To meet the growing demand to replace IR remote control with low-power, robust RF communication, NXP offers solutions based on the RF4CE standard protocol.

The JN5148 is especially well suited for high-end and connected TV applications, where it can be used as the core of a remote controller. It has the processing power to include "TV mouse" motion-sensing algorithms as well as running the RF4CE protocol. It can also be used as the power-management and wake-up controller of the TV set itself. In universal remotes, its dual-boot capability can be used to control consumer appliances running the RF4CE protocol as well as home-automation systems running ZigBee-HA or -SE protocols.

## Features: RF transceiver

- 2.4 GHz IEEE802.15.4 compliant
- Very low power - Rx 17.5 mA, Tx 15.0 mA
- Deep sleep current 100 nA
- Sleep current with active sleep timer 1.25 µA
- Receiver sensitivity -95 dBm
- Transmit power 2.5 dBm
- 128-bit AES security processor
- MAC accelerator with packet formatting, CRCs, address check, autoacks, timers
- 500 & 667 kbps data rate modes
- Time of Flight ranging engine
- On-chip power regulation for battery operation from 2.0 to 3.6 V
- Minimal number of external components

## JN5148 block diagram

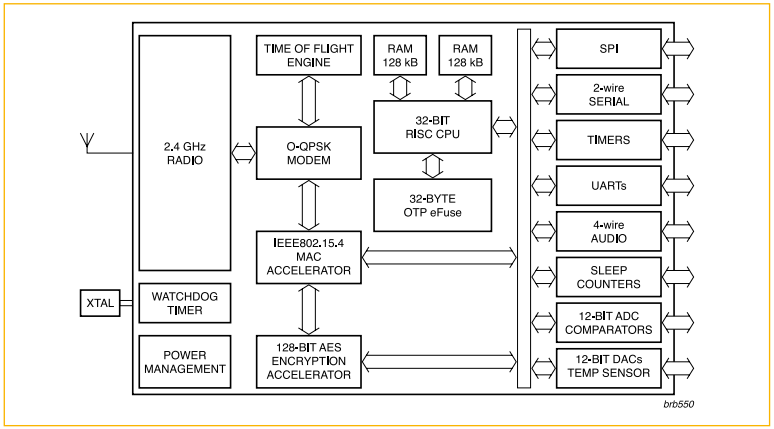


## Features: microcontroller

- Low-power, high performance 32-bit RISC CPU
- Clock speed 4 to 32 MHz
- Variable instruction width for high coding efficiency
- Multi-stage instruction pipeline
- 128 kB ROM and 128 kB RAM for bootloaded program code & data
- Up to 21 Digital IO
- JTAG debug interface
- 4-input 12-bit ADC, two 12-bit DACs, two comparators
- 3 application timer/counters
- 2 UARTs
- SPI port with 5 selects
- $I^2C$ bus interface
- 4-wire digital audio interface
- Watchdog timer
- Low-power pulse counters available in sleep

# Additional resources

The listed web pages provide access to additional information about NXP and its product lines.

**Application notes**
www.nxp.com/all_appnotes

**Datasheets (all released products and product families)**
www.nxp.com/all_datasheets

**Interactive selection guides**
www.nxp.com/selectionguides/all-selectionguides.html

**Sales literature (product leaflets, brochures)**
www.nxp.com/all_literature

**X-reference tool (search tool for NXP website, for use offline)**
www.nxp.com/search/advanced

**NXP Chinese website (simplified characters)**
www.cn.nxp.com

**NXP Chinese website (traditional characters)**
www.tw.nxp.com

GreenChip is a trademark of NXP Semiconductors N.V.

www.nxp.com

**© 2012 NXP Semiconductors N.V.**

All rights reserved. Reproduction in whole or in part is prohibited without the prior written consent of the copyright owner. The information presented in this document does not form part of any quotation or contract, is believed to be accurate and reliable and may be changed without notice. No liability will be accepted by the publisher for any consequence of its use. Publication thereof does not convey nor imply any license under patent- or other industrial or intellectual property rights.

Date of release: February 2012

Document order number: 9397 750 17085

Printed in the Netherlands