PIC24F04KA201 Family Data Sheet

14/20-Pin General Purpose, 16-Bit Flash Microcontrollers with nanoWatt XLP™ Technology

© 2009 Microchip Technology Inc.

Note the following details of the code protection feature on Microchip devices:

- Microchip products meet the specification contained in their particular Microchip Data Sheet.
- Microchip believes that its family of products is one of the most secure families of its kind on the market today, when used in the intended manner and under normal conditions.
- There are dishonest and possibly illegal methods used to breach the code protection feature. All of these methods, to our knowledge, require using the Microchip products in a manner outside the operating specifications contained in Microchip's Data Sheets. Most likely, the person doing so is engaged in theft of intellectual property.
- Microchip is willing to work with the customer who is concerned about the integrity of their code.
- Neither Microchip nor any other semiconductor manufacturer can guarantee the security of their code. Code protection does not mean that we are guaranteeing the product as "unbreakable."

Code protection is constantly evolving. We at Microchip are committed to continuously improving the code protection features of our products. Attempts to break Microchip's code protection feature may be a violation of the Digital Millennium Copyright Act. If such acts allow unauthorized access to your software or other copyrighted work, you may have a right to sue for relief under that Act.

Information contained in this publication regarding device applications and the like is provided only for your convenience and may be superseded by updates. It is your responsibility to ensure that your application meets with your specifications. MICROCHIP MAKES NO REPRESENTATIONS OR WARRANTIES OF ANY KIND WHETHER EXPRESS OR IMPLIED, WRITTEN OR ORAL, STATUTORY OR OTHERWISE, RELATED TO THE INFORMATION, INCLUDING BUT NOT LIMITED TO ITS CONDITION, QUALITY, PERFORMANCE, MERCHANTABILITY OR FITNESS FOR PURPOSE**.** Microchip disclaims all liability arising from this information and its use. Use of Microchip devices in life support and/or safety applications is entirely at the buyer's risk, and the buyer agrees to defend, indemnify and hold harmless Microchip from any and all damages, claims, suits, or expenses resulting from such use. No licenses are conveyed, implicitly or otherwise, under any Microchip intellectual property rights.

Trademarks

The Microchip name and logo, the Microchip logo, Accuron, dsPIC, KEELOQ, KEELOQ logo, MPLAB, PIC, PICmicro, PICSTART, rfPIC, SmartShunt and UNI/O are registered trademarks of Microchip Technology Incorporated in the U.S.A. and other countries.

FilterLab, Hampshire, Linear Active Thermistor, MXDEV, MXLAB, SEEVAL, SmartSensor and The Embedded Control Solutions Company are registered trademarks of Microchip Technology Incorporated in the U.S.A.

Analog-for-the-Digital Age, Application Maestro, CodeGuard, dsPICDEM, dsPICDEM.net, dsPICworks, dsSPEAK, ECAN, ECONOMONITOR, FanSense, In-Circuit Serial Programming, ICSP, ICEPIC, Mindi, MiWi, MPASM, MPLAB Certified logo, MPLIB, MPLINK, mTouch, nanoWatt XLP, PICkit, PICDEM, PICDEM.net, PICtail, PIC^{32} logo, PowerCal, PowerInfo, PowerMate, PowerTool, REAL ICE, rfLAB, Select Mode, Total Endurance, TSHARC, WiperLock and ZENA are trademarks of Microchip Technology Incorporated in the U.S.A. and other countries.

SQTP is a service mark of Microchip Technology Incorporated in the U.S.A.

All other trademarks mentioned herein are property of their respective companies.

© 2009, Microchip Technology Incorporated, Printed in the U.S.A., All Rights Reserved.

Printed on recycled paper.

QUALITY MANAGEMENT SYSTEM
CERTIFIED BY DNV
ISO/TS 16949:2002

Microchip received ISO/TS-16949:2002 certification for its worldwide headquarters, design and wafer fabrication facilities in Chandler and Tempe, Arizona; Gresham, Oregon and design centers in California and India. The Company's quality system processes and procedures are for its PIC® MCUs and dsPIC® DSCs, KEELOQ® code hopping devices, Serial EEPROMs, microperipherals, nonvolatile memory and analog products. In addition, Microchip's quality system for the design and manufacture of development systems is ISO 9001:2000 certified.

PIC24F04KA201 FAMILY

14/20-Pin General Purpose, 16-Bit Flash Microcontrollers with nanoWatt XLP™ Technology

Power Management Modes:

- Run – CPU, Flash, SRAM and Peripherals On
- Doze – CPU Clock Runs Slower than Peripherals
- Idle – CPU Off, Flash, SRAM and Peripherals On
- Sleep – CPU, Flash and Peripherals Off and SRAM On
- Deep Sleep – CPU, Flash, SRAM and Most Peripherals Off
- Run mode Currents Down to 8 μA Typical
- Idle mode Currents Down to 2 μA Typical
- Deep Sleep mode Currents Down to 20 nA Typical
- Watchdog Timer 350 nA, 1.8V Typical

High-Performance CPU:

- Modified Harvard Architecture
- Up to 16 MIPS Operation @ 32 MHz
- 8 MHz Internal Oscillator with 4x PLL Option and Multiple Divide Options
- 17-Bit by 17-Bit Single-Cycle Hardware Multiplier
- 32-Bit by 16-Bit Hardware Divider
- 16-Bit x 16-Bit Working Register Array
- C Compiler Optimized Instruction Set Architecture

Peripheral Features:

- Serial Communication modules:
  - SPI, I^2C™ and UART modules
- Three 16-Bit Timers/Counters with Programmable Prescaler
- 16-Bit Capture Inputs
- 16-Bit Compare/PWM Output
- Configurable Open-Drain Outputs on Digital I/O Pins
- Up to Three External Interrupt Sources

Analog Features:

- 10-Bit, up to 9-Channel Analog-to-Digital Converter:
  - 500 ksps conversion rate
  - Conversion available during Sleep and Idle
- Dual Analog Comparators with Programmable Input/Output Configuration
- Charge Time Measurement Unit (CTMU):
  - Used for capacitance sensing
  - Compatible with mTouch™ capacitive sensing
  - Time measurement, down to 1 ns resolution
  - Delay/pulse generation, down to 1 ns resolution

Special Microcontroller Features:

- Operating Voltage Range of 1.8V to 3.6V
- High-Current Sink/Source (18 mA/18 mA) on All I/O Pins
- Flash Program Memory:
  - Erase/write cycles: 10000 minimum
  - 40 years data retention minimum
- Fail-Safe Clock Monitor
- System Frequency Range Declaration bits:
  - Declaring the frequency range helps in optimizing the current consumption.
- Flexible Watchdog Timer (WDT) with On-Chip, Low-Power RC Oscillator for Reliable Operation
- In-Circuit Serial Programming™ (ICSP™)
- Programmable High/Low-Voltage Detect (HLVD)
- Brown-out Reset (BOR):
  - Standard BOR with three programmable trip points; can be disabled in Sleep
- Extreme Low-Power DSBOR for Deep Sleep, LPBOR for all other modes

PIC24F Device	Pins	Program Memory (bytes)	SRAM (bytes)	Timers 16-Bit	Input Capture	Output Compare/ PWM	UART/ IrDA®	SPI	I^2C™	10-Bit A/D (ch)	Comparators	CTMU (ch)
04KA200	14	4K	512	3	1	1	1	1	1	7	2	7
04KA201	20	4K	512	3	1	1	1	1	1	9	2	9

Pin Diagrams

14-Pin PDIP, TSSOP(1)

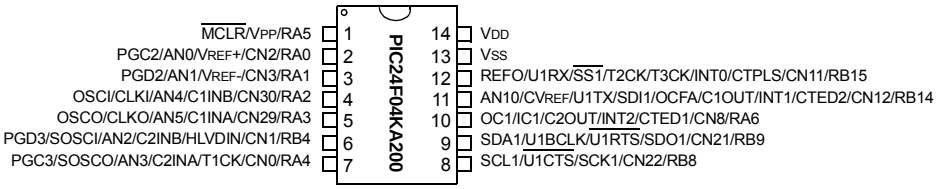

20-Pin PDIP, SSOP, SOIC(1)

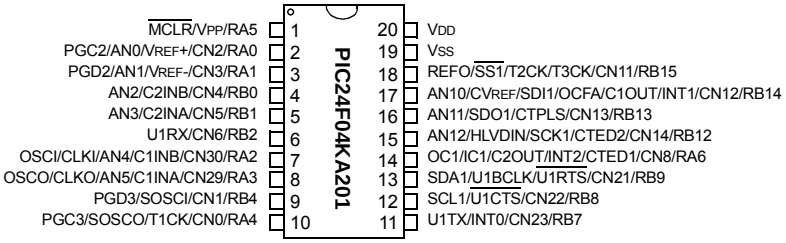

Note 1: All device pins have a maximum voltage of 3.6V and are not 5V tolerant.

 © 2009 Microchip Technology Inc.

Pin Diagrams (Continued)

20-Pin QFN(1,2)

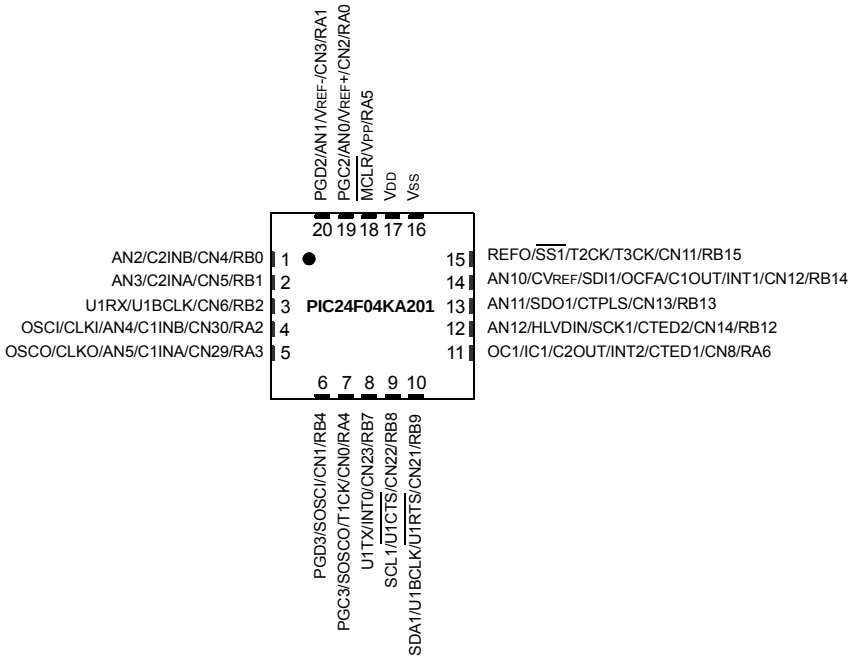

Note 1: Connecting the bottom pad to Vss is recommended.
2: All device pins have a maximum voltage of 3.6V and are not 5V tolerant.

Table of Contents

1.0 Device Overview 7
2.0 Guidelines for Getting Started with 16-Bit Microcontrollers 15
3.0 CPU 19
4.0 Memory Organization 25
5.0 Flash Program Memory 43
6.0 Resets 51
7.0 Interrupt Controller 57
8.0 Oscillator Configuration 81
9.0 Power-Saving Features 91
10.0 I/O Ports 99
11.0 Timer1 101
12.0 Timer2/3 103
13.0 Input Capture 109
14.0 Output Compare 111
15.0 Serial Peripheral Interface (SPI) 117
16.0 Inter-Integrated Circuit (I^2C™) 125
17.0 Universal Asynchronous Receiver Transmitter (UART) 133
18.0 High/Low-Voltage Detect (HLVD) 141
19.0 10-Bit High-Speed A/D Converter 143
20.0 Comparator Module 153
21.0 Comparator Voltage Reference 157
22.0 Charge Time Measurement Unit (CTMU) 159
23.0 Special Features 163
24.0 Development Support 173
25.0 Instruction Set Summary 177
26.0 Electrical Characteristics 185
27.0 Packaging Information 205
Appendix A: Revision History 213
Index 215
The Microchip Web Site 219
Customer Change Notification Service 219
Customer Support 219
Reader Response 220
Product Identification System 221

 © 2009 Microchip Technology Inc.

TO OUR VALUED CUSTOMERS

It is our intention to provide our valued customers with the best documentation possible to ensure successful use of your Microchip products. To this end, we will continue to improve our publications to better suit your needs. Our publications will be refined and enhanced as new volumes and updates are introduced.

If you have any questions or comments regarding this publication, please contact the Marketing Communications Department via E-mail at **docerrors@microchip.com** or fax the **Reader Response Form** in the back of this data sheet to (480) 792-4150. We welcome your feedback.

Most Current Data Sheet

To obtain the most up-to-date version of this data sheet, please register at our Worldwide Web site at:

http://www.microchip.com

You can determine the version of a data sheet by examining its literature number found on the bottom outside corner of any page. The last character of the literature number is the version number, (e.g., DS30000A is version A of document DS30000).

Errata

An errata sheet, describing minor operational differences from the data sheet and recommended workarounds, may exist for current devices. As device/documentation issues become known to us, we will publish an errata sheet. The errata will specify the revision of silicon and revision of document to which it applies.

To determine if an errata sheet exists for a particular device, please check with one of the following:

- Microchip's Worldwide Web site; http://www.microchip.com
- Your local Microchip sales office (see last page)

When contacting a sales office, please specify which device, revision of silicon and data sheet (include literature number) you are using.

Customer Notification System

Register on our web site at **www.microchip.com** to receive the most current information on all of our products.

NOTES:

 © 2009 Microchip Technology Inc.

1.0 DEVICE OVERVIEW

This document contains device-specific information for the following devices:

- PIC24F04KA200
- PIC24F04KA201

The PIC24F04KA201 family introduces a new line of extreme low-power Microchip devices: a 16-bit micro-controller family with a broad peripheral feature set and enhanced computational performance. It also offers a new migration option for those high-performance applications, which may be outgrowing their 8-bit platforms, but do not require the numerical processing power of a digital signal processor.

1.1 Core Features

1.1.1 16-BIT ARCHITECTURE

Central to all PIC24F devices is the 16-bit modified Harvard architecture, first introduced with Microchip's dsPIC® digital signal controllers. The PIC24F CPU core offers a wide range of enhancements, such as:

- 16-bit data and 24-bit address paths with the ability to move information between data and memory spaces
- Linear addressing of up to 12 Mbytes (program space) and 64 Kbytes (data)
- A 16-element working register array with built-in software stack support
- A 17 x 17 hardware multiplier with support for integer math
- Hardware support for 32-bit by 16-bit division
- An instruction set that supports multiple addressing modes and is optimized for high-level languages, such as C
- Operational performance up to 16 MIPS

1.1.2 POWER-SAVING TECHNOLOGY

The PIC24F04KA200 and PIC24F04KA201 devices incorporate a range of features that can significantly reduce power consumption during operation. Key items include:

- **On-the-Fly Clock Switching:** The device clock can be changed under software control to the Timer1 source or the internal, low-power RC oscillator during operation, allowing users to incorporate power-saving ideas into their software designs.
- **Doze Mode Operation:** When timing-sensitive applications, such as serial communications, require the uninterrupted operation of peripherals, the CPU clock speed can be selectively reduced, allowing incremental power savings without missing a beat.
- **Instruction-Based Power-Saving Modes:** There are three instruction-based power-saving modes:
  - Idle Mode: The core is shut down while leaving the peripherals active.
  - Sleep Mode: The core and peripherals that require the system clock are shut down, leaving the peripherals that use their own clock, or the clock from other devices, active.
  - Deep Sleep Mode: The core, peripherals (except DSWDT), Flash and SRAM are shut down.

1.1.3 OSCILLATOR OPTIONS AND FEATURES

The PIC24F04KA201 family offers five different oscillator options, allowing users a range of choices in developing application hardware. These include:

- Two Crystal modes using crystals or ceramic resonators.
- Two External Clock modes offering the option of a divide-by-2 clock output.
- Two fast internal oscillators (FRCs): One with a nominal 8 MHz output and the other with nominal 500 kHz output. These outputs can also be divided under software control to provide clock speed as low as 31 kHz or 2 kHz.
- A Phase Locked Loop (PLL) frequency multiplier, available to the External Oscillator modes and the 8 MHz FRC oscillator, which allows clock speeds of up to 32 MHz.
- A separate internal RC oscillator (LPRC) with a fixed 31 kHz output, which provides a low-power option for timing-insensitive applications.

The internal oscillator block also provides a stable reference source for the Fail-Safe Clock Monitor (FSCM). This option constantly monitors the main clock source against a reference signal provided by the internal oscillator and enables the controller to switch to the internal oscillator, allowing for continued low-speed operation or a safe application shutdown.

1.1.4 EASY MIGRATION

Regardless of the memory size, all the devices share the same rich set of peripherals, allowing for a smooth migration path as applications grow and evolve.

The consistent pinout scheme used throughout the entire family also helps in migrating to the next larger device. This is true when moving between devices with the same pin count, or even jumping from 14-pin to 20-pin devices. The PIC24F16KA102 family is directly compatible for migration to larger program and data memory.

The PIC24F family is pin compatible with devices in the dsPIC33 family, and shares some compatibility with the pinout schema for PIC18 and dsPIC30. This extends the ability of applications to grow from the relatively simple, to the powerful and complex.

1.2 Other Special Features

- **Communications:** The PIC24F04KA201 family incorporates a range of serial communication peripherals to handle a range of application requirements. There is an I^2C™ module that supports both the Master and Slave modes of operation. It also comprises a UART with built-in IrDA® encoders/decoders and an SPI module.
- **10-Bit A/D Converter:** This module incorporates programmable acquisition time, allowing for a channel to be selected and a conversion to be initiated without waiting for a sampling period, and faster sampling speed. The 16-deep result buffer can be used either in Sleep to reduce power, or in Active mode to improve throughput.
- **Charge Time Measurement Unit (CTMU) Interface:** The PIC24F04KA201 family includes the new CTMU interface module, which can be used for capacitive touch sensing using Microchip's mTouch™ technology, proximity sensing and also for precision time measurement and pulse generation.

1.3 Details on Individual Family Members

Devices in the PIC24F04KA201 family are available in 14-pin and 20-pin packages. The general block diagram for all devices is displayed in Figure 1-1.

The devices are different from each other in two ways:

1. Number of ADC channels (9 channels on 20-pin parts, 7 channels on 14-pin parts).
2. Available I/O pins and ports (12 pins on two ports for 14-pin devices and 18 pins on two ports for 20-pin devices).

All other features for devices in this family are identical; these are summarized in Table 1-1.

A list of the pin features available on the PIC24F04KA201 family devices, sorted by function, is provided in Table 1-2.

Note:	Table 1-1 provides the pin location of individual peripheral features and not how they are multiplexed on the same pin. This information is provided in the pinout diagrams on pages 2 and 3 of the data sheet. Multiplexed features are sorted by the priority given to a feature, with the highest priority peripheral being listed first.

1.4 Differences from PIC24F16KA102 Family

The PIC24F04KA201 family architecture is very similar to that of the PIC24F16KA102 family. The PIC24F04KA201 family is a subset of the PIC24F16KA102 devices.

The PIC24F16KA102 family has the following additional features:

- Larger Program Memory
- Larger Data Memory
- CRC Module
- Debugging Capabilities through ICSP™
- Additional I/O on 20-Pin Devices (up to 24 I/O pins)
- Data EEPROM memory
- Boot Segment and General Segments for Program Code (with available code protection)
- One Additional UART (2 total)

 © 2009 Microchip Technology Inc.

TABLE 1-1: DEVICE FEATURES FOR THE PIC24F04KA201 FAMILY

Features	PIC24F04KA200	PIC24F04KA201
Operating Frequency	DC – 32 MHz	
Program Memory (bytes)	4K	
Program Memory (instructions)	1408	
Data Memory (bytes)	512	
Interrupt Sources (soft vectors/NMI traps)	25 (21/4)	
I/O Ports	PORTA<6:0> PORTB<15:14, 9:8, 4>	PORTA<6:0> PORTB<15:12, 9:7, 4, 2:0>
Total I/O Pins	12	18
Timers: Total Number (16-bit) 32-Bit (from paired 16-bit timers)	3 1	
Input Capture Channels	1	
Output Compare/PWM Channels	1	
Input Change Notification Interrupt	11	17
Serial Communications: UART SPI (3-wire/4-wire) I^2C™	1 1 1	
10-Bit Analog-to-Digital Module (input channels)	7	9
Analog Comparators	2	
Resets (and delays)	POR, BOR, RESET Instruction, $\overline{\text{MCLR}}$, WDT, Illegal Opcode, REPEAT Instruction, Hardware Traps, Configuration Word Mismatch (PWRT, OST, PLL Lock)	
Instruction Set	76 Base Instructions, Multiple Addressing Mode Variations	
Packages	14-Pin PDIP/TSSOP	20-Pin PDIP/SSOP/SOIC/QFN

FIGURE 1-1: PIC24F04KA201 FAMILY GENERAL BLOCK DIAGRAM

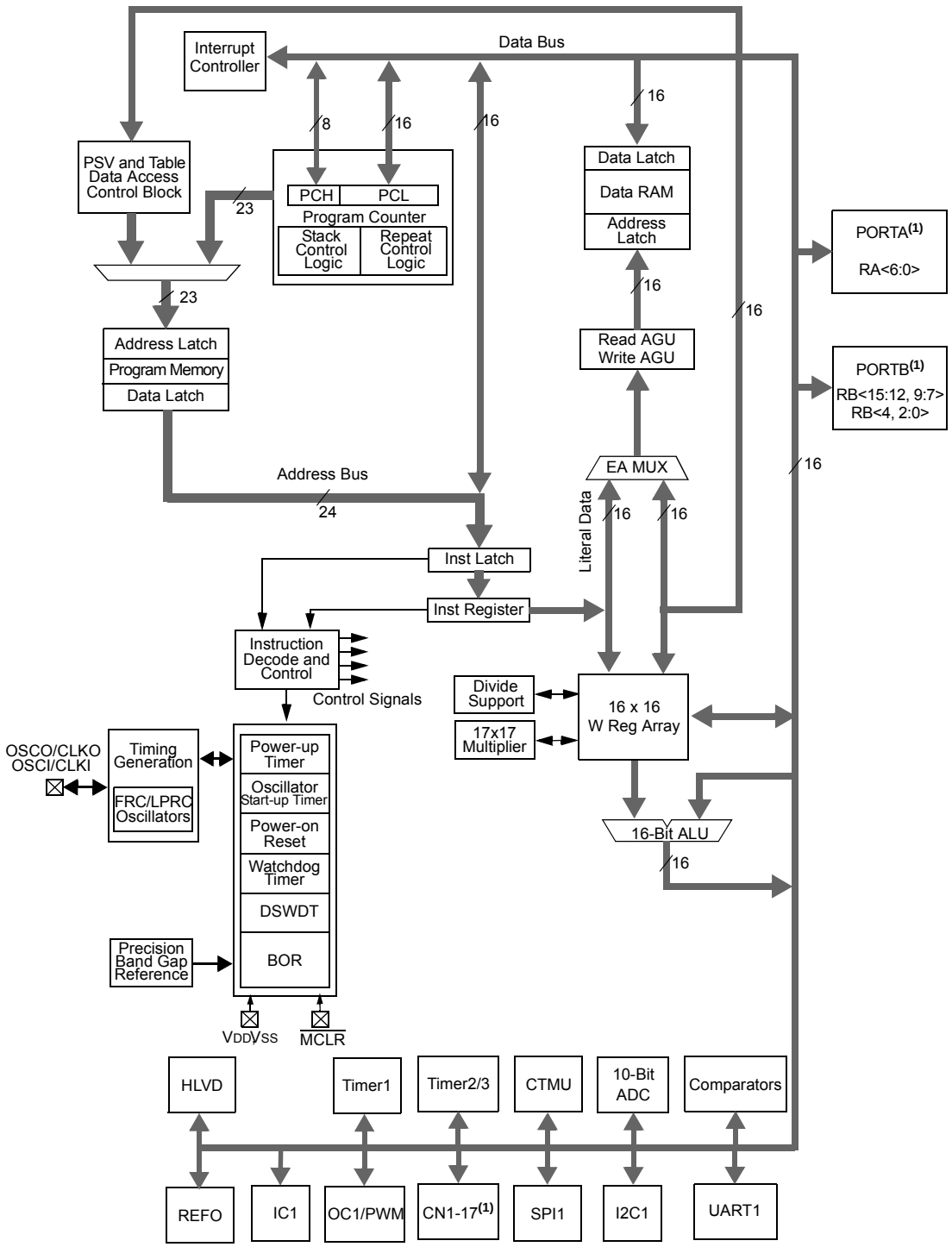

Note 1: All pins or features are not implemented on all device pinout configurations. See Table 1-2 for I/O port pin descriptions.

 © 2009 Microchip Technology Inc.

TABLE 1-2: PIC24F04KA201 FAMILY PINOUT DESCRIPTIONS

Function	Pin Number			I/O	Input Buffer	Description
	14-Pin PDIP/TSSOP/ SOIC	20-Pin PDIP/SSOP/ SOIC	20-Pin QFN			
AN0	2	2	19	I	ANA	A/D Analog Inputs
AN1	3	3	20	I	ANA	
AN2	6	4	1	I	ANA	
AN3	7	5	2	I	ANA	
AN4	4	7	4	I	ANA	
AN5	5	8	5	I	ANA	
AN10	11	17	14	I	ANA	
AN11	—	16	13	I	ANA	
AN12	—	15	12	I	ANA	
U1BCLK	9	13	10	O	—	UART1 IrDA® Baud Clock
C1INA	5	8	5	I	ANA	Comparator 1 Input A (Positive input)
C1INB	4	7	4	I	ANA	Comparator 1 Input B (Negative input option 1)
C1OUT	11	17	14	O	—	Comparator 1 Output
C2INA	7	5	2	I	ANA	Comparator 2 Input A (Positive input)
C2INB	6	4	1	I	ANA	Comparator 2 Input B (Negative input option 1)
C2OUT	10	14	11	O	—	Comparator 2 Output
CLKI	4	7	4	I	ANA	Main Clock Input Connection
CLKO	5	8	5	O	—	System Clock Output
CN0	7	10	7	I	ST	Interrupt-on-Change Inputs
CN1	6	9	6	I	ST	
CN2	2	2	19	I	ST	
CN3	3	3	20	I	ST	
CN4	—	4	1	I	ST	
CN5	—	5	2	I	ST	
CN6	—	6	3	I	ST	
CN8	10	14	11	I	ST	
CN11	12	18	15	I	ST	
CN12	11	17	14	I	ST	
CN13	—	16	13	I	ST	
CN14	—	15	12	I	ST	
CN21	9	13	10	I	ST	
CN22	8	12	9	I	ST	
CN23	—	11	8	I	ST	
CN29	5	8	5	I	ST	
CN30	4	7	4	I	ST	
CVREF	11	17	14	O	ANA	Comparator Voltage Reference Output
CTED1	10	14	11	I	ST	CTMU Trigger Edge Input 1
CTED2	11	15	12	I	ST	CTMU Trigger Edge Input 2
CTPLS	12	16	13	O	—	CTMU Pulse Output
IC1	10	14	11	I	ST	Input Capture 1 Input
INT0	12	11	8	I	ST	External Interrupt Inputs
INT1	11	17	14	I	ST	
INT2	10	14	11	I	ST	

Legend: ST = Schmitt Trigger input buffer, ANA = Analog level input/output, I^2C™ = I^2C/SMBus input buffer

TABLE 1-2: PIC24F04KA201 FAMILY PINOUT DESCRIPTIONS (CONTINUED)

Function	Pin Number			I/O	Input Buffer	Description
	14-Pin PDIP/TSSOP/ SOIC	20-Pin PDIP/SSOP/ SOIC	20-Pin QFN			
HLVDIN	6	15	12	I	ANA	HLVD Voltage Input
$\overline{\text{MCLR}}$	1	1	18	I	ST	Master Clear (device Reset) Input
OC1	10	14	11	O	—	Output Compare/PWM Outputs
OCFA	11	17	14	I	—	Output Compare Fault A
OSCI	4	7	4	I	ANA	Main Oscillator Input Connection
OSCO	5	8	5	O	ANA	Main Oscillator Output Connection
PGC2	2	2	19	I/O	ST	In-Circuit Debugger and ICSP Programming Clock
PGD2	3	3	20	I/O	ST	In-Circuit Debugger and ICSP Programming Data
PGC3	7	10	7	I/O	ST	In-Circuit Debugger and ICSP Programming Clock
PGD3	6	9	6	I/O	ST	In-Circuit Debugger and ICSP Programming Data
RA0	2	2	19	I/O	ST	PORTA Digital I/O
RA1	3	3	20	I/O	ST	
RA2	4	7	4	I/O	ST	
RA3	5	8	5	I/O	ST	
RA4	7	10	7	I/O	ST	
RA5	1	1	18	I/O	ST	
RA6	10	14	11	I/O	ST	
RB0	—	4	1	I/O	ST	PORTB Digital I/O
RB1	—	5	2	I/O	ST	
RB2	—	6	3	I/O	ST	
RB4	6	9	6	I/O	ST	
RB8	8	12	9	I/O	ST	
RB9	9	13	10	I/O	ST	
RB12	—	15	12	I/O	ST	
RB13	—	16	13	I/O	ST	
RB14	11	17	14	I/O	ST	
RB15	12	18	15	I/O	ST	
REFO	12	18	15	O	—	Reference Clock Output
SCK1	8	15	12	I/O	ST	SPI1 Serial Clock Input/Output
SCL1	8	12	9	I/O	I^2C	I2C1 Synchronous Serial Clock Input/Output
SDA1	9	13	10	I/O	I^2C	I2C1 Data Input/Output
SDI1	11	17	14	I	ST	SPI1 Serial Data Input
SDO1	9	16	13	O	—	SPI1 Serial Data Output
SOSCI	6	9	6	I	ANA	Secondary Oscillator Input
SOSCO	7	10	7	O	ANA	Secondary Oscillator Output
$\overline{\text{SS1}}$	12	18	15	I/O	ST	Slave Select Input/Frame Select Output (SPI1)
T1CK	7	10	7	I	ST	Timer1 Clock
T2CK	12	18	15	I	ST	Timer2 Clock
T3CK	12	18	15	I	ST	Timer3 Clock
$\overline{\text{U1CTS}}$	8	12	9	I	ST	UART1 Clear to Send Input
$\overline{\text{U1RTS}}$	9	13	10	O	—	UART1 Request to Send Output
U1RX	12	6	3	I	ST	UART1 Receive
U1TX	11	11	8	O	—	UART1 Transmit Output

Legend: ST = Schmitt Trigger input buffer, ANA = Analog level input/output, I^2C™ = I^2C/SMBus input buffer

 © 2009 Microchip Technology Inc.

TABLE 1-2: PIC24F04KA201 FAMILY PINOUT DESCRIPTIONS (CONTINUED)

Function	Pin Number			I/O	Input Buffer	Description
	14-Pin PDIP/TSSOP/ SOIC	20-Pin PDIP/SSOP/ SOIC	20-Pin QFN			
VDD	14	20	17	P	—	Positive Supply for Peripheral Digital Logic and I/O Pins
VPP	1	1	18	P	—	Programming Mode Entry Voltage
VREF-	3	3	20	I	ANA	A/D and Comparator Reference Voltage (low) Input
VREF+	2	2	19	I	ANA	A/D and Comparator Reference Voltage (high) Input
VSS	13	19	16	P	—	Ground Reference for Logic and I/O Pin

Legend: ST = Schmitt Trigger input buffer, ANA = Analog level input/output, I^2C™ = I^2C/SMBus input buffer

NOTES:

 © 2009 Microchip Technology Inc.

2.0 GUIDELINES FOR GETTING STARTED WITH 16-BIT MICROCONTROLLERS

2.1 Basic Connection Requirements

Getting started with the PIC24FXXXX of 16-bit microcontrollers requires attention to a minimal set of device pin connections before proceeding with development.

The following pins must always be connected:

- All VDD and VSS pins
  (see **Section 2.2 "Power Supply Pins"**)
- All AVDD and AVSS pins, regardless of whether or not the analog device features are used
  (see **Section 2.2 "Power Supply Pins"**)
- $\overline{\text{MCLR}}$ pin
  (see **Section 2.3 "Master Clear (MCLR) Pin"**)
- ENVREG/DISVREG and VCAP/VDDCORE pins (PIC24F devices only)
  (see **Section 2.4 "Voltage Regulator Pins (ENVREG/DISVREG and VCAP/VDDCORE)"**)

These pins must also be connected if they are being used in the end application:

- PGECx/PGEDx pins used for In-Circuit Serial Programming™ (ICSP™) and debugging purposes
  (see **Section 2.5 "ICSP Pins"**)
- OSCI and OSCO pins when an external oscillator source is used
  (see **Section 2.6 "External Oscillator Pins"**)

Additionally, the following pins may be required:

- VREF+/VREF- pins used when external voltage reference for analog modules is implemented

Note:	The AVDD and AVSS pins must always be connected, regardless of whether any of the analog modules are being used.

The minimum mandatory connections are shown in Figure 2-1.

FIGURE 2-1: RECOMMENDED MINIMUM CONNECTIONS

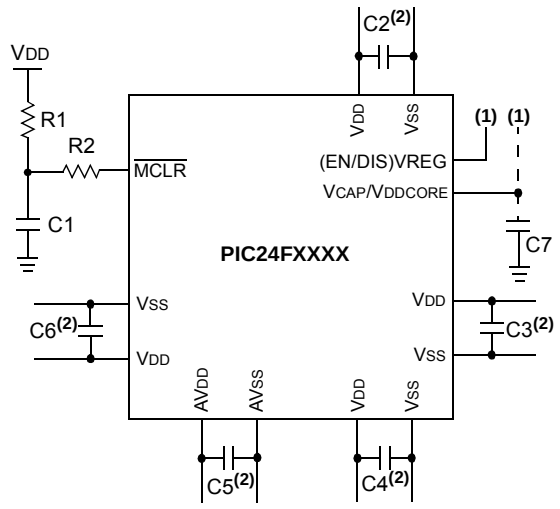

Key (all values are recommendations):

C1 through C6: 0.1 μF, 20V ceramic

C7: 10 μF, 6.3V or greater, tantalum or ceramic

R1: 10 kΩ

R2: 100Ω to 470Ω

Note 1: See **Section 2.4 "Voltage Regulator Pins (ENVREG/DISVREG and VCAP/VDDCORE)"** for explanation of ENVREG/DISVREG pin connections.

2: The example shown is for a PIC24F device with five VDD/VSS and AVDD/AVSS pairs. Other devices may have more or less pairs; adjust the number of decoupling capacitors appropriately.

2.2 Power Supply Pins

2.2.1 DECOUPLING CAPACITORS

The use of decoupling capacitors on every pair of power supply pins, such as V_{DD}, V_{SS}, AV_{DD} and AV_{SS}, is required.

Consider the following criteria when using decoupling capacitors:

- **Value and type of capacitor:** A 0.1 μF (100 nF), 10-20V capacitor is recommended. The capacitor should be a low-ESR device with a resonance frequency in the range of 200 MHz and higher. Ceramic capacitors are recommended.
- **Placement on the printed circuit board:** The decoupling capacitors should be placed as close to the pins as possible. It is recommended to place the capacitors on the same side of the board as the device. If space is constricted, the capacitor can be placed on another layer on the PCB using a via; however, ensure that the trace length from the pin to the capacitor is no greater than 0.25 inch (6 mm).
- **Handling high-frequency noise:** If the board is experiencing high-frequency noise (upward of tens of MHz), add a second ceramic type capacitor in parallel to the above described decoupling capacitor. The value of the second capacitor can be in the range of 0.01 μF to 0.001 μF. Place this second capacitor next to each primary decoupling capacitor. In high-speed circuit designs, consider implementing a decade pair of capacitances as close to the power and ground pins as possible (e.g., 0.1 μF in parallel with 0.001 μF).
- **Maximizing performance:** On the board layout from the power supply circuit, run the power and return traces to the decoupling capacitors first, and then to the device pins. This ensures that the decoupling capacitors are first in the power chain. Equally important is to keep the trace length between the capacitor and the power pins to a minimum, thereby reducing PCB trace inductance.

2.2.2 TANK CAPACITORS

On boards with power traces running longer than six inches in length, it is suggested to use a tank capacitor for integrated circuits including microcontrollers to supply a local power source. The value of the tank capacitor should be determined based on the trace resistance that connects the power supply source to the device and the maximum current drawn by the device in the application. In other words, select the tank capacitor so that it meets the acceptable voltage sag at the device. Typical values range from 4.7 μF to 47 μF.

2.3 Master Clear ($\overline{MCLR}$) Pin

The $\overline{MCLR}$ pin provides two specific device functions: device Reset, and device programming and debugging. If programming and debugging are not required in the end application, a direct connection to V_{DD} may be all that is required. The addition of other components, to help increase the application's resistance to spurious Resets from voltage sags, may be beneficial. A typical configuration is shown in Figure 2-1. Other circuit designs may be implemented depending on the application's requirements.

During programming and debugging, the resistance and capacitance that can be added to the pin must be considered. Device programmers and debuggers drive the $\overline{MCLR}$ pin. Consequently, specific voltage levels (V_{IH} and V_{IL}) and fast signal transitions must not be adversely affected. Therefore, specific values of R1 and C1 will need to be adjusted based on the application and PCB requirements. For example, it is recommended that the capacitor, C1, be isolated from the $\overline{MCLR}$ pin during programming and debugging operations by using a jumper (Figure 2-2). The jumper is replaced for normal run-time operations.

Any components associated with the $\overline{MCLR}$ pin should be placed within 0.25 inch (6 mm) of the pin.

FIGURE 2-2: EXAMPLE OF $\overline{MCLR}$ PIN CONNECTIONS

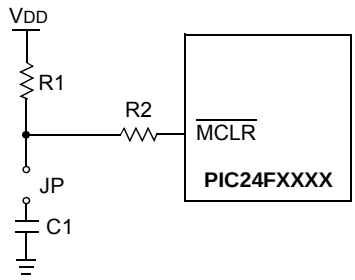

Note 1: R1 ≤ 10 kΩ is recommended. A suggested starting value is 10 kΩ. Ensure that the $\overline{MCLR}$ pin V_{IH} and V_{IL} specifications are met.

2: R2 ≤ 470Ω will limit any current flowing into $\overline{MCLR}$ from the external capacitor, C, in the event of $\overline{MCLR}$ pin breakdown, due to Electrostatic Discharge (ESD) or Electrical Overstress (EOS). Ensure that the $\overline{MCLR}$ pin V_{IH} and V_{IL} specifications are met.

 © 2009 Microchip Technology Inc.

2.4 Voltage Regulator Pins (ENVREG/DISVREG and VCAP/VDDCORE)

Note:	This section applies only to PIC24F devices with an on-chip voltage regulator.

The on-chip voltage regulator enable/disable pin (ENVREG or DISVREG, depending on the device family) must always be connected directly to either a supply voltage or to ground. The particular connection is determined by whether or not the regulator is to be used:

- For ENVREG, tie to VDD to enable the regulator or to ground to disable the regulator
- For DISVREG, tie to ground to enable the regulator or to VDD to disable the regulator

When the regulator is enabled, a low-ESR (<5Ω) capacitor is required on the VCAP/VDDCORE pin to stabilize the voltage regulator output voltage. The VCAP/VDDCORE pin must not be connected to VDD and must use a capacitor of 10 μF connected to ground. The type can be ceramic or tantalum. A suitable example is the Murata GRM21BF50J106ZE01 (10 μF, 6.3V) or equivalent. Designers may use Figure 2-3 to evaluate ESR equivalence of candidate devices.

The placement of this capacitor should be close to VCAP/VDDCORE. It is recommended that the trace length not exceed 0.25 inch (6 mm). Refer to **Section 26.0 "Electrical Characteristics"** for additional information.

When the regulator is disabled, the VCAP/VDDCORE pin must be tied to a voltage supply at the VDDCORE level. Refer to **Section 26.0 "Electrical Characteristics"** for information on VDD and VDDCORE.

FIGURE 2-3: FREQUENCY vs. ESR PERFORMANCE FOR SUGGESTED VCAP

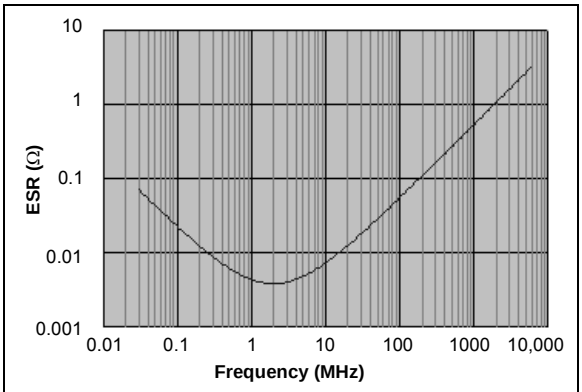

Note: Data for Murata GRM21BF50J106ZE01 shown. Measurements at 25°C, 0V DC bias.

2.5 ICSP Pins

The PGECx and PGEDx pins are used for In-Circuit Serial Programming (ICSP) and debugging purposes. It is recommended to keep the trace length between the ICSP connector and the ICSP pins on the device as short as possible. If the ICSP connector is expected to experience an ESD event, a series resistor is recommended, with the value in the range of a few tens of ohms, not to exceed 100Ω.

Pull-up resistors, series diodes and capacitors on the PGECx and PGEDx pins are not recommended as they will interfere with the programmer/debugger communications to the device. If such discrete components are an application requirement, they should be removed from the circuit during programming and debugging. Alternatively, refer to the AC/DC characteristics and timing requirements information in the respective device Flash programming specification for information on capacitive loading limits and pin input voltage high (VIH) and input low (VIL) requirements.

For device emulation, ensure that the "Communication Channel Select" (i.e., PGECx/PGEDx pins) programmed into the device matches the physical connections for the ICSP to the MPLAB® ICD 2, MPLAB ICD 3 or REAL ICE™ emulator.

For more information on the ICD 2, ICD 3 and REAL ICE emulator connection requirements, refer to the following documents that are available on the Microchip web site.

- *"MPLAB® ICD 2 In-Circuit Debugger User's Guide"* (DS51331)
- *"Using MPLAB® ICD 2"* (poster) (DS51265)
- *"MPLAB® ICD 2 Design Advisory"* (DS51566)
- *"Using MPLAB® ICD 3"* (poster) (DS51765)
- *"MPLAB® ICD 3 Design Advisory"* (DS51764)
- *"MPLAB® REAL ICE™ In-Circuit Emulator User's Guide"* (DS51616)
- *"Using MPLAB® REAL ICE™ In-Circuit Emulator"* (poster) (DS51749)

2.6 External Oscillator Pins

Many microcontrollers have options for at least two oscillators: a high-frequency primary oscillator and a low-frequency secondary oscillator (refer to **Section 8.0 "Oscillator Configuration"** for details).

The oscillator circuit should be placed on the same side of the board as the device. Place the oscillator circuit close to the respective oscillator pins with no more than 0.5 inch (12 mm) between the circuit components and the pins. The load capacitors should be placed next to the oscillator itself, on the same side of the board.

Use a grounded copper pour around the oscillator circuit to isolate it from surrounding circuits. The grounded copper pour should be routed directly to the MCU ground. Do not run any signal traces or power traces inside the ground pour. Also, if using a two-sided board, avoid any traces on the other side of the board where the crystal is placed. A suggested layout is shown in Figure 2-4.

For additional information and design guidance on oscillator circuits, please refer to these Microchip Application Notes, available at the corporate web site (www.microchip.com):

- *AN826, "Crystal Oscillator Basics and Crystal Selection for rfPIC™ and PICmicro® Devices"*
- *AN849, "Basic PICmicro® Oscillator Design"*
- *AN943, "Practical PICmicro® Oscillator Analysis and Design"*
- *AN949, "Making Your Oscillator Work"*

FIGURE 2-4: SUGGESTED PLACEMENT OF THE OSCILLATOR CIRCUIT

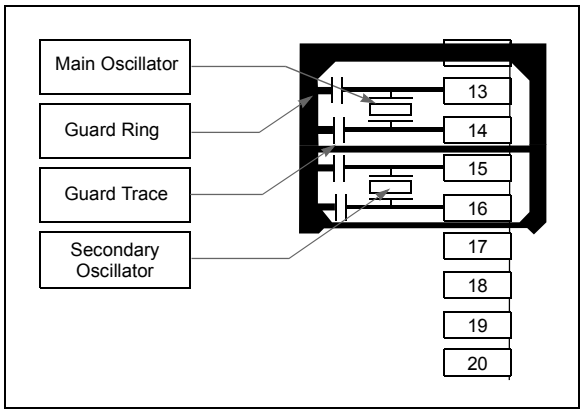

2.7 Configuration of Analog and Digital Pins During ICSP Operations

If the MPLAB ICD 2, ICD 3 or REAL ICE emulator is selected as a debugger, it automatically initializes all of the A/D input pins (ANx) as "digital" pins by setting all bits in the AD1PCFGL register.

The bits in this register that correspond to the A/D pins that are initialized by the MPLAB ICD 2, ICD 3 or REAL ICE emulator must not be cleared by the user application firmware; otherwise, communication errors will result between the debugger and the device.

If your application needs to use certain A/D pins as analog input pins during the debug session, the user application must clear the corresponding bits in the AD1PCFGL register during initialization of the ADC module.

When the MPLAB ICD 2, ICD 3 or REAL ICE emulator is used as a programmer, the user application firmware must correctly configure the AD1PCFGL register. Automatic initialization of this register is only done during debugger operation. Failure to correctly configure the register(s) will result in all A/D pins being recognized as analog input pins, resulting in the port value being read as a logic '0', which may affect user application functionality.

2.8 Unused I/Os

Unused I/O pins should be configured as outputs and driven to a logic low state. Alternatively, connect a 1 kΩ to 10 kΩ resistor to VSS on unused pins and drive the output to logic low.

 © 2009 Microchip Technology Inc.

3.0 CPU

Note:	This data sheet summarizes the features of this group of PIC24F devices. It is not intended to be a comprehensive reference source. For more information on the CPU, refer to the *"PIC24F Family Reference Manual"*, **Section 2. "CPU"** (DS39703).

The PIC24F CPU has a 16-bit (data) modified Harvard architecture with an enhanced instruction set and a 24-bit instruction word with a variable length opcode field. The Program Counter (PC) is 23 bits wide and addresses up to 4M instructions of user program memory space. A single-cycle instruction prefetch mechanism is used to help maintain throughput and provides predictable execution. All instructions execute in a single cycle, with the exception of instructions that change the program flow, the double-word move (`MOV.D`) instruction and the table instructions. Overhead-free program loop constructs are supported using the `REPEAT` instructions, which are interruptible at any point.

PIC24F devices have sixteen, 16-bit working registers in the programmer's model. Each of the working registers can act as a data, address or address offset register. The 16th working register (W15) operates as a Software Stack Pointer (SSP) for interrupts and calls.

The upper 32 Kbytes of the data space memory map can optionally be mapped into program space at any 16K word boundary of program memory defined by the 8-bit Program Space Visibility Page Address (PSVPAG) register. The program to data space mapping feature lets any instruction access program space as if it were data space.

The Instruction Set Architecture (ISA) has been significantly enhanced beyond that of the PIC18, but maintains an acceptable level of backward compatibility. All PIC18 instructions and addressing modes are supported, either directly, or through simple macros. Many of the ISA enhancements have been driven by compiler efficiency needs.

The core supports Inherent (no operand), Relative, Literal, Memory Direct and three groups of addressing modes. All modes support Register Direct and various Register Indirect modes. Each group offers up to seven addressing modes. Instructions are associated with predefined addressing modes depending upon their functional requirements.

For most instructions, the core is capable of executing a data (or program data) memory read, a working register (data) read, a data memory write and a program (instruction) memory read per instruction cycle. As a result, three parameter instructions can be supported, allowing trinary operations (that is, A + B = C) to be executed in a single cycle.

A high-speed, 17-bit by 17-bit multiplier has been included to significantly enhance the core arithmetic capability and throughput. The multiplier supports Signed, Unsigned and Mixed mode, 16-bit by 16-bit or 8-bit by 8-bit integer multiplication. All multiply instructions execute in a single cycle.

The 16-bit ALU has been enhanced with integer divide assist hardware that supports an iterative non-restoring divide algorithm. It operates in conjunction with the `REPEAT` instruction looping mechanism and a selection of iterative divide instructions to support 32-bit (or 16-bit), divided by 16-bit integer signed and unsigned division. All divide operations require 19 cycles to complete but are interruptible at any cycle boundary.

The PIC24F has a vectored exception scheme with up to eight sources of non-maskable traps and up to 118 interrupt sources. Each interrupt source can be assigned to one of seven priority levels.

A block diagram of the CPU is illustrated in Figure 3-1.

3.1 Programmer's Model

Figure 3-2 displays the programmer's model for the PIC24F. All registers in the programmer's model are memory mapped and can be manipulated directly by instructions.

Table 3-1 provides a description of each register. All registers associated with the programmer's model are memory mapped.

FIGURE 3-1: PIC24F CPU CORE BLOCK DIAGRAM

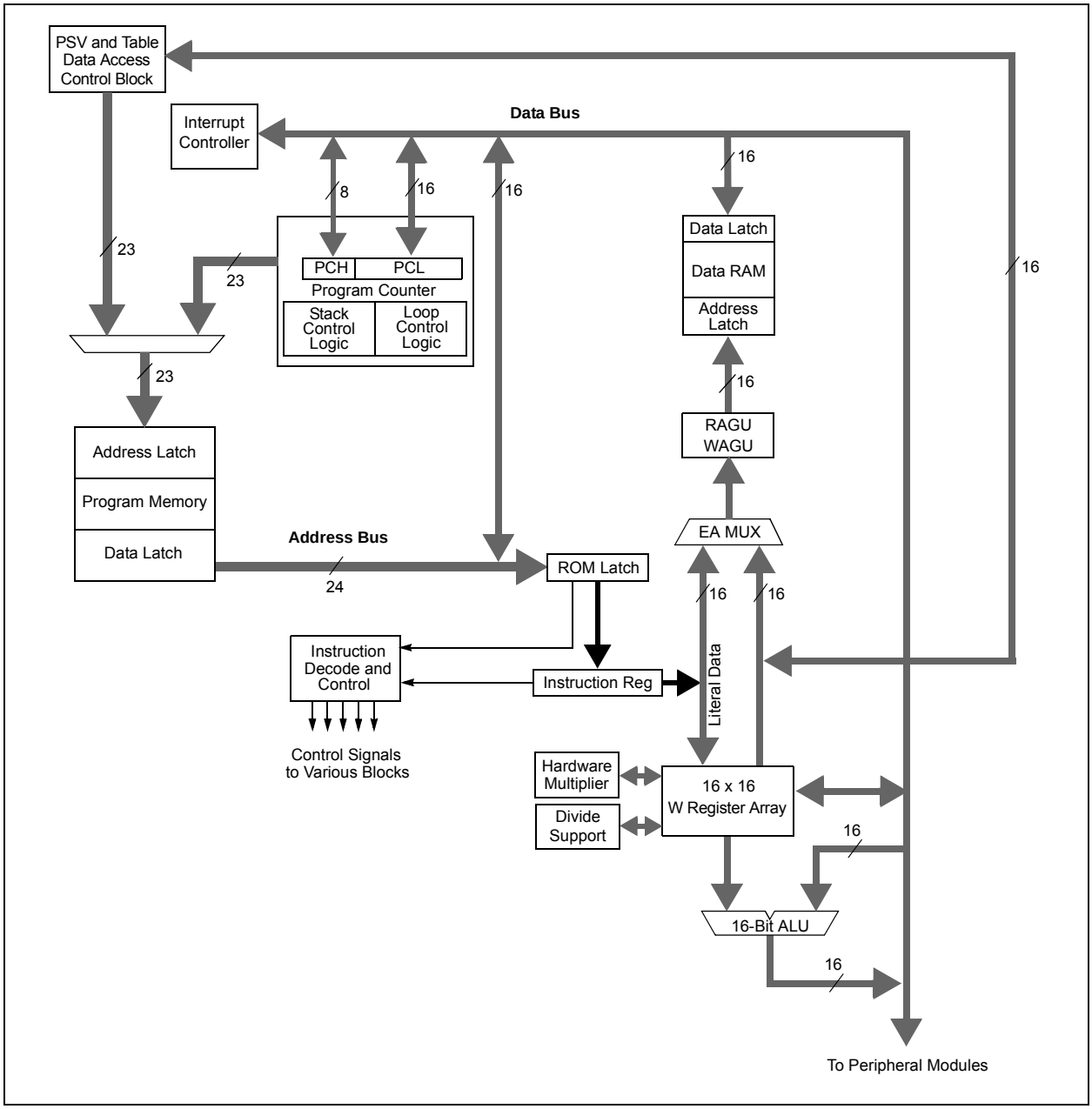

TABLE 3-1: CPU CORE REGISTERS

Register(s) Name	Description
W0 through W15	Working Register Array
PC	23-Bit Program Counter
SR	ALU STATUS Register
SPLIM	Stack Pointer Limit Value Register
TBLPAG	Table Memory Page Address Register
PSVPAG	Program Space Visibility Page Address Register
RCOUNT	Repeat Loop Counter Register
CORCON	CPU Control Register

 © 2009 Microchip Technology Inc.

FIGURE 3-2: PROGRAMMER'S MODEL

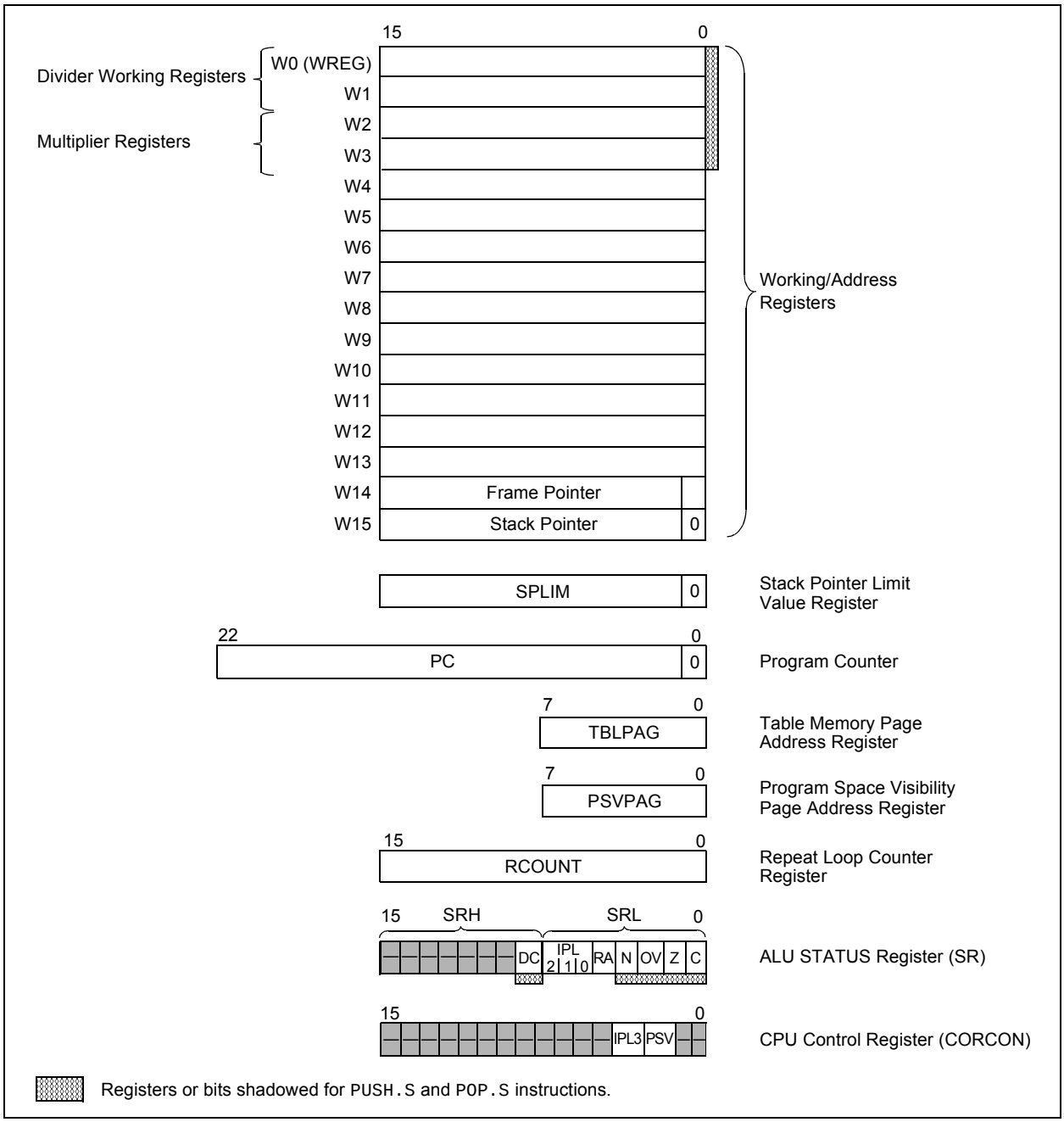

3.2 CPU Control Registers

REGISTER 3-1: SR: ALU STATUS REGISTER

U-0	U-0	U-0	U-0	U-0	U-0	U-0	R/W-0, HSC
—	—	—	—	—	—	—	DC
bit 15							bit 8

R/W-0, HSC(1)	R/W-0, HSC(1)	R/W-0, HSC(1)	R-0, HSC	R/W-0, HSC	R/W-0, HSC	R/W-0, HSC	R/W-0, HSC
IPL2(2)	IPL1(2)	IPL0(2)	RA	N	OV	Z	C
bit 7							bit 0

Legend:	HSC = Hardware Settable/Clearable bit		
R = Readable bit	W = Writable bit	U = Unimplemented bit, read as ‘0’	
-n = Value at POR	‘1’ = Bit is set	‘0’ = Bit is cleared	x = Bit is unknown

bit 15-9 **Unimplemented:** Read as ‘0’

bit 8 **DC:** ALU Half Carry/Borrow bit
1 = A carry-out from the 4th low-order bit (for byte-sized data) or 8th low-order bit (for word-sized data) of the result occurred
0 = No carry-out from the 4th or 8th low-order bit of the result has occurred

bit 7-5 **IPL<2:0>:** CPU Interrupt Priority Level Status bits(1,2)
111 = CPU interrupt priority level is 7 (15); user interrupts disabled
110 = CPU interrupt priority level is 6 (14)
101 = CPU Interrupt priority Level is 5 (13)
100 = CPU interrupt priority level is 4 (12)
011 = CPU interrupt priority level is 3 (11)
010 = CPU interrupt priority level is 2 (10)
001 = CPU interrupt priority level is 1 (9)
000 = CPU interrupt priority level is 0 (8)

bit 4 **RA:** REPEAT Loop Active bit
1 = REPEAT loop in progress
0 = REPEAT loop not in progress

bit 3 **N:** ALU Negative bit
1 = Result was negative
0 = Result was non-negative (zero or positive)

bit 2 **OV:** ALU Overflow bit
1 = Overflow occurred for signed (2’s complement) arithmetic in this arithmetic operation
0 = No overflow has occurred

bit 1 **Z:** ALU Zero bit
1 = An operation, which effects the Z bit, has set it at some time in the past
0 = The most recent operation, which effects the Z bit, has cleared it (i.e., a non-zero result)

bit 0 **C:** ALU Carry/$\overline{\text{Borrow}}$ bit
1 = A carry-out from the Most Significant bit (MSb) of the result occurred
0 = No carry-out from the Most Significant bit (MSb) of the result occurred

Note 1: The IPL Status bits are read-only when NSTDIS (INTCON1<15>) = 1.
2: The IPL Status bits are concatenated with the IPL3 bit (CORCON<3>) to form the CPU Interrupt Priority Level (IPL). The value in parentheses indicates the IPL when IPL3 = 1.

 © 2009 Microchip Technology Inc.

REGISTER 3-2: CORCON: CPU CONTROL REGISTER

U-0	U-0	U-0	U-0	U-0	U-0	U-0	U-0
—	—	—	—	—	—	—	—
bit 15							bit 8

U-0	U-0	U-0	U-0	R/C-0, HSC	R/W-0	U-0	U-0
—	—	—	—	IPL3(1)	PSV	—	—
bit 7							bit 0

Legend:	HSC = Hardware Settable/Clearable bit		
R = Readable bit	W = Writable bit	U = Unimplemented bit, read as ‘0’	
-n = Value at POR	‘1’ = Bit is set	‘0’ = Bit is cleared	x = Bit is unknown

bit 15-4 **Unimplemented:** Read as ‘0’

bit 3 **IPL3:** CPU Interrupt Priority Level Status bit(1)
1 = CPU interrupt priority level is greater than 7
0 = CPU interrupt priority level is 7 or less

bit 2 **PSV:** Program Space Visibility in Data Space Enable bit
1 = Program space visible in data space
0 = Program space not visible in data space

bit 1-0 **Unimplemented:** Read as ‘0’

Note 1: User interrupts are disabled when IPL3 = 1.

3.3 Arithmetic Logic Unit (ALU)

The PIC24F ALU is 16 bits wide and is capable of addition, subtraction, bit shifts and logic operations. Unless otherwise mentioned, arithmetic operations are 2’s complement in nature. Depending on the operation, the ALU may affect the values of the Carry (C), Zero (Z), Negative (N), Overflow (OV) and Digit Carry (DC) Status bits in the SR register. The C and DC Status bits operate as Borrow and Digit Borrow bits, respectively, for subtraction operations.

The ALU can perform 8-bit or 16-bit operations, depending on the mode of the instruction that is used. Data for the ALU operation can come from the W register array, or data memory, depending on the addressing mode of the instruction. Likewise, output data from the ALU can be written to the W register array or a data memory location.

The PIC24F CPU incorporates hardware support for both multiplication and division. This includes a dedicated hardware multiplier and support hardware division for 16-bit divisor.

3.3.1 MULTIPLIER

The ALU contains a high-speed, 17-bit x 17-bit multiplier. It supports unsigned, signed or mixed sign operation in several multiplication modes:

- 16-bit x 16-bit signed
- 16-bit x 16-bit unsigned
- 16-bit signed x 5-bit (literal) unsigned
- 16-bit unsigned x 16-bit unsigned
- 16-bit unsigned x 5-bit (literal) unsigned
- 16-bit unsigned x 16-bit signed
- 8-bit unsigned x 8-bit unsigned

3.3.2 DIVIDER

The divide block supports 32-bit/16-bit and 16-bit/16-bit signed and unsigned integer divide operations with the following data sizes:

1. 32-bit signed/16-bit signed divide
2. 32-bit unsigned/16-bit unsigned divide
3. 16-bit signed/16-bit signed divide
4. 16-bit unsigned/16-bit unsigned divide

The quotient for all divide instructions ends up in W0 and the remainder in W1. Sixteen-bit signed and unsigned `DIV` instructions can specify any W register for both the 16-bit divisor (Wn), and any W register (aligned) pair (W(m + 1):Wm) for the 32-bit dividend. The divide algorithm takes one cycle per bit of divisor, so both 32-bit/16-bit and 16-bit/16-bit instructions take the same number of cycles to execute.

3.3.3 MULTI-BIT SHIFT SUPPORT

The PIC24F ALU supports both single bit and single-cycle, multi-bit arithmetic and logic shifts. Multi-bit shifts are implemented using a shifter block, capable of performing up to a 15-bit arithmetic right shift, or up to a 15-bit left shift, in a single cycle. All multi-bit shift instructions only support Register Direct Addressing for both the operand source and result destination.

A full summary of instructions that use the shift operation is provided below in Table 3-2.

TABLE 3-2: INSTRUCTIONS THAT USE THE SINGLE AND MULTI-BIT SHIFT OPERATION

Instruction	Description
ASR	Arithmetic shift right source register by one or more bits.
SL	Shift left source register by one or more bits.
LSR	Logical shift right source register by one or more bits.

 © 2009 Microchip Technology Inc.

4.0 MEMORY ORGANIZATION

As with Harvard architecture devices, the PIC24F microcontrollers feature separate program and data memory space and busing. This architecture also allows the direct access of program memory from the data space during code execution.

4.1 Program Address Space

The program address memory space of the PIC24F devices is 4M instructions. The space is addressable by a 24-bit value derived from either the 23-bit Program Counter (PC) during program execution, or from a table operation or data space remapping, as described in **Section 4.3 "Interfacing Program and Data Memory Spaces"**.

The user access to the program memory space is restricted to the lower half of the address range (000000h to 7FFFFFh). The exception is the use of TBLRD/TBLWT operations, which use TBLPAG<7> to permit access to the Configuration bits and Device ID sections of the configuration memory space.

The memory map for the PIC24F04KA201 family of devices is displayed in Figure 4-1.

FIGURE 4-1: PROGRAM SPACE MEMORY MAP FOR PIC24F04KA201 FAMILY DEVICES

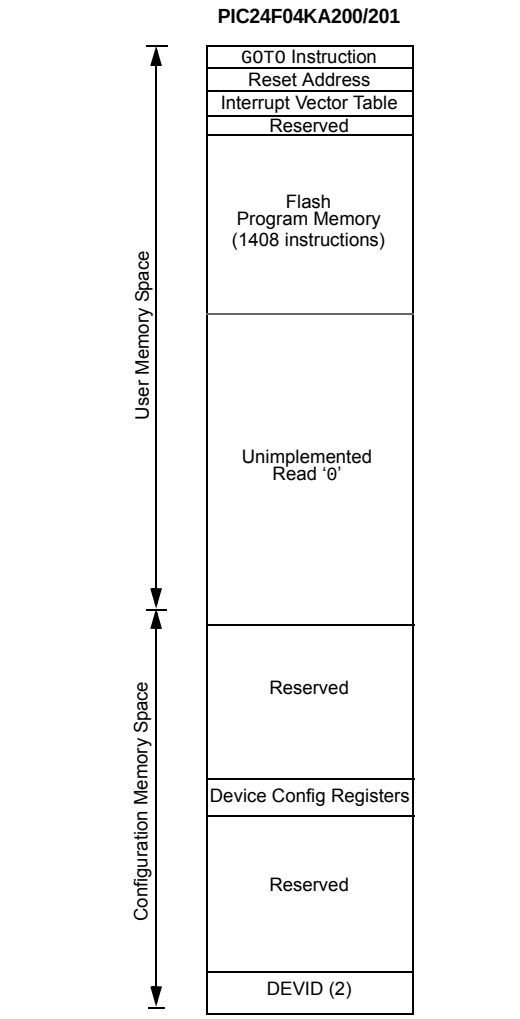

Note: Memory areas are not displayed to scale.

4.1.1 PROGRAM MEMORY ORGANIZATION

The program memory space is organized in word-addressable blocks. Although it is treated as 24 bits wide, it is more appropriate to think of each address of the program memory as a lower and upper word, with the upper byte of the upper word being unimplemented. The lower word always has an even address, while the upper word has an odd address (Figure 4-2).

Program memory addresses are always word-aligned on the lower word, and addresses are incremented or decremented by two during code execution. This arrangement also provides compatibility with data memory space addressing and makes it possible to access data in the program memory space.

4.1.2 HARD MEMORY VECTORS

All PIC24F devices reserve the addresses between 00000h and 000200h for hard coded program execution vectors. A hardware Reset vector is provided to redirect code execution from the default value of the PC on device Reset to the actual start of code. A `GOTO` instruction is programmed by the user at 000000h with the actual address for the start of code at 000002h.

PIC24F devices also have two interrupt vector tables, located from 000004h to 0000FFh and 000104h to 0001FFh. These vector tables allow each of the many device interrupt sources to be handled by separate ISRs. **Section 7.1 "Interrupt Vector (IVT) Table"** discusses the interrupt vector tables more in detail.

4.1.3 DEVICE CONFIGURATION WORDS

Table 4-1 provides the addresses of the device Configuration Words for the PIC24F04KA201 family. Their location in the memory map is displayed in Figure 4-1.

Refer to **Section 23.1 "Configuration Bits"** for more information on device Configuration Words.

TABLE 4-1: DEVICE CONFIGURATION WORDS FOR PIC24F04KA201 FAMILY DEVICES

Configuration Word	Configuration Word Addresses
FBS	F80000
FGS	F80004
FOSCSEL	F80006
FOSC	F80008
FWDT	F8000A
FPOR	F8000C
FICD	F8000E
FDS	F80010

FIGURE 4-2: PROGRAM MEMORY ORGANIZATION

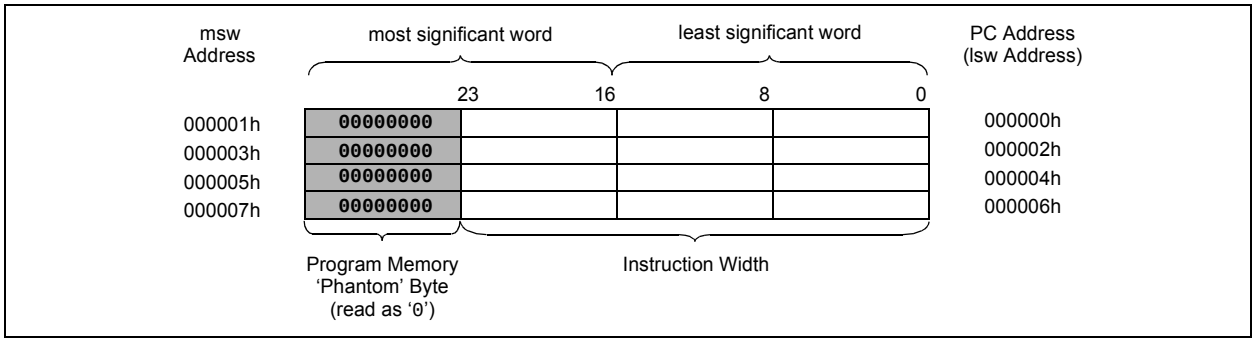

 © 2009 Microchip Technology Inc.

4.2 Data Address Space

The PIC24F core has a separate, 16-bit wide data memory space, addressable as a single linear range. The data space is accessed using two Address Generation Units (AGUs), one each for read and write operations. The data space memory map is displayed in Figure 4-3.

All Effective Addresses (EAs) in the data memory space are 16 bits wide and point to bytes within the data space. This gives a data space address range of 64 Kbytes or 32K words. The lower half of the data memory space (that is, when EA<15> = 0) is used for implemented memory addresses, while the upper half (EA<15> = 1) is reserved for the Program Space Visibility (PSV) area (see **Section 4.3.3 "Reading Data From Program Memory Using Program Space Visibility"**).

PIC24F04KA201 family devices implement a total of 768 words of data memory. Should an EA point to a location outside of this area, an all zero word or byte will be returned.

4.2.1 DATA SPACE WIDTH

The data memory space is organized in byte-addressable, 16-bit wide blocks. Data is aligned in data memory and registers as 16-bit words, but all the data space EAs resolve to bytes. The Least Significant Bytes (LSBs) of each word have even addresses, while the Most Significant Bytes (MSBs) have odd addresses.

FIGURE 4-3: DATA SPACE MEMORY MAP FOR PIC24F04KA201 FAMILY DEVICES

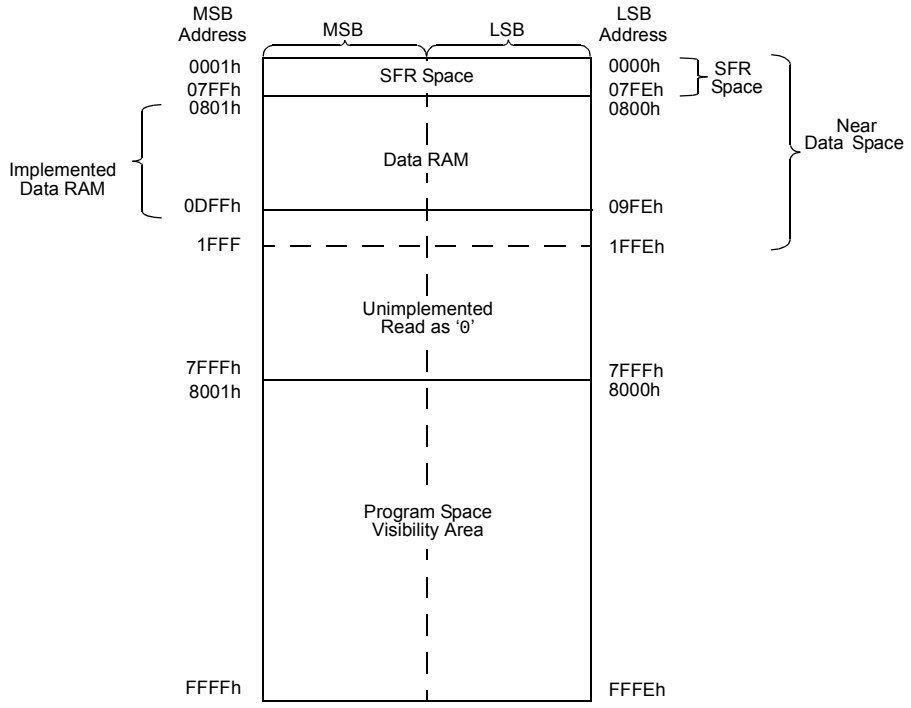

Note: Data memory areas are not shown to scale.

4.2.2 DATA MEMORY ORGANIZATION AND ALIGNMENT

To maintain backward compatibility with PIC® devices and improve data space memory usage efficiency, the PIC24F instruction set supports both word and byte operations. As a consequence of byte accessibility, all EA calculations are internally scaled to step through word-aligned memory. For example, the core recognizes that Post-Modified Register Indirect Addressing mode [Ws++] will result in a value of Ws + 1 for byte operations and Ws + 2 for word operations.

Data byte reads will read the complete word, which contains the byte, using the LSB of any EA to determine which byte to select. The selected byte is placed onto the LSB of the data path. That is, the data memory and the registers are organized as two parallel, byte-wide entities with shared (word) address decode but separate write lines. Data byte writes only write to the corresponding side of the array or register, which matches the byte address.

All word accesses must be aligned to an even address. Misaligned word data fetches are not supported, so care must be taken when mixing byte and word operations, or translating from 8-bit MCU code. If a misaligned read or write is attempted, an address error trap will be generated. If the error occurred on a read, the instruction underway is completed; if it occurred on a write, the instruction will be executed, but the write will not occur. In either case, a trap is then executed, allowing the system and/or user to examine the machine state prior to execution of the address Fault.

All byte loads into any W register are loaded into the LSB. The MSB is not modified.

A sign-extend instruction (`SE`) is provided to allow the users to translate 8-bit signed data to 16-bit signed values. Alternatively, for 16-bit unsigned data, users can clear the MSB of any W register by executing a zero-extend (`ZE`) instruction on the appropriate address.

Although most instructions are capable of operating on word or byte data sizes, it should be noted that some instructions operate only on words.

4.2.3 NEAR DATA SPACE

The 8-Kbyte area between 0000h and 1FFFh is referred to as the near data space. Locations in this space are directly addressable via a 13-bit absolute address field within all memory direct instructions. The remainder of the data space is addressable indirectly. Additionally, the whole data space is addressable using `MOV` instructions, which support Memory Direct Addressing (MDA) with a 16-bit address field. For PIC24F04KA201 family devices, the entire implemented data memory lies in Near Data Space (NDS).

4.2.4 SFR SPACE

The first 2 Kbytes of the near data space, from 0000h to 07FFh, are primarily occupied with Special Function Registers (SFRs). These are used by the PIC24F core and peripheral modules for controlling the operation of the device.

SFRs are distributed among the modules that they control and are generally grouped together by that module. Much of the SFR space contains unused addresses; these are read as '`0`'. The SFR space, where the SFRs are actually implemented, is provided in Table 4-2. Each implemented area indicates a 32-byte region where at least one address is implemented as an SFR. A complete listing of implemented SFRs, including their addresses, is provided in Table 4-3 through Table 4-21.

TABLE 4-2: IMPLEMENTED REGIONS OF SFR DATA SPACE

	SFR Space Address							
	xx00	**xx20**	**xx40**	**xx60**	**xx80**	**xxA0**	**xxC0**	**xxE0**
000h	Core			ICN	Interrupts			—
100h	Timers		Capture	—	Compare	—	—	—
200h	I^2C™	UART	SPI		—	—	I/O	
300h	ADC/CMTU		—	—	—	—	—	—
400h	—	—	—	—	—	—	—	—
500h	—	—	—	—	—	—	—	—
600h	—	Comp	—	—	—			
700h	—	—	System/DS/HLVD	NVM/PMD	—	—	—	—

Legend: — = No implemented SFRs in this block.

 © 2009 Microchip Technology Inc.

TABLE 4-3: CPU CORE REGISTERS MAP

File Name	Addr	Bit 15	Bit 14	Bit 13	Bit 12	Bit 11	Bit 10	Bit 9	Bit 8	Bit 7	Bit 6	Bit 5	Bit 4	Bit 3	Bit 2	Bit 1	Bit 0	All Resets
WREG0	0000	Working Register 0																0000
WREG1	0002	Working Register 1																0000
WREG2	0004	Working Register 2																0000
WREG3	0006	Working Register 3																0000
WREG4	0008	Working Register 4																0000
WREG5	000A	Working Register 5																0000
WREG6	000C	Working Register 6																0000
WREG7	000E	Working Register 7																0000
WREG8	0010	Working Register 8																0000
WREG9	0012	Working Register 9																0000
WREG10	0014	Working Register 10																0000
WREG11	0016	Working Register 11																0000
WREG12	0018	Working Register 12																0000
WREG13	001A	Working Register 13																0000
WREG14	001C	Working Register 14																0000
WREG15	001E	Working Register 15																0800
SPLIM	0020	Stack Pointer Limit Value Register																xxxx
PCL	002E	Program Counter Low Byte Register																0000
PCH	0030	—	—	—	—	—	—	—	—	Program Counter Register High Byte								0000
TBLPAG	0032	—	—	—	—	—	—	—	—	Table Memory Page Address Register								0000
PSVPAG	0034	—	—	—	—	—	—	—	—	Program Space Visibility Page Address Register								0000
RCOUNT	0036	REPEAT Loop Counter Register																xxxx
SR	0042	—	—	—	—	—	—	—	DC	IPL2	IPL1	IPL0	RA	N	OV	Z	C	0000
CORCON	0044	—	—	—	—	—	—	—	—	—	—	—	—	IPL3	PSV	—	—	0000
DISICNT	0052	—	—	Disable Interrupts Counter Register														xxxx

Legend: — = unimplemented, read as '0'. Reset values are shown in hexadecimal.

© 2009 Microchip Technology Inc.

TABLE 4-4: ICN REGISTER MAP

File Name	Addr	Bit 15	Bit 14	Bit 13	Bit 12	Bit 11	Bit 10	Bit 9	Bit 8	Bit 7	Bit 6	Bit 5	Bit 4	Bit 3	Bit 2	Bit 1	Bit 0	All Resets
CNEN1	0060	—	CN14IE(1)	CN13IE(1)	CN12IE	CN11IE	—	—	CN8IE	—	CN6IE(1)	CN5IE(1)	CN4IE(1)	CN3IE	CN2IE	CN1IE	CN0IE	0000
CNEN2	0062	—	CN30IE	CN29IE	—	—	—	—	—	CN23IE(1)	CN22IE	CN21IE	—	—	—	—	—	0000
CNPU1	0068	—	CN14PUE(1)	CN13PUE(1)	CN12PUE	CN11PUE	—	—	CN8PUE	—	CN6PUE(1)	CN5PUE(1)	CN4PUE(1)	CN3PUE	CN2PUE	CN1PUE	CN0PUE	0000
CNPU2	006A	—	CN30PUE	CN29PUE	—	—	—	—	—	CN23PUE(1)	CN22PUE	CN21PUE	—	—	—	—	—	0000
CNPD1	0070	—	CN14PDE(1)	CN13PDE(1)	CN12PDE	CN11PDE	—	—	CN8PDE	—	CN6PDE(1)	CN5PDE(1)	CN4PDE(1)	CN3PDE	CN2PDE	CN1PDE	CN0PDE	0000
CNPD2	0072	—	CN30PDE	CN29PDE	—	—	—	—	—	CN23PDE(1)	CN22PDE	CN21PDE	—	—	—	—	—	0000

Legend: — = unimplemented, read as '0'. Reset values are shown in hexadecimal.

Note 1: These bits are not implemented on 14-pin devices.

TABLE 4-5: INTERRUPT CONTROLLER REGISTER MAP

File Name	Addr	Bit 15	Bit 14	Bit 13	Bit 12	Bit 11	Bit 10	Bit 9	Bit 8	Bit 7	Bit 6	Bit 5	Bit 4	Bit 3	Bit 2	Bit 1	Bit 0	All Resets
INTCON1	0080	NSTDIS	—	—	—	—	—	—	—	—	—	—	MATHERR	ADDRERR	STKERR	OSCFAIL	—	0000
INTCON2	0082	ALTIVT	DISI	—	—	—	—	—	—	—	—	—	—	—	INT2EP	INT1EP	INT0EP	0000
IFS0	0084	NVMIF	—	AD1IF	U1TXIF	U1RXIF	SPI1IF	SPF1IF	T3IF	T2IF	—	—	—	T1IF	OC1IF	IC1IF	INT0IF	0000
IFS1	0086	—	—	INT2IF	—	—	—	—	—	—	—	—	INT1IF	CNIF	CMIF	MI2C1IF	SI2C1IF	0000
IFS3	008A	—	—	—	—	—	—	—	—	—	—	—	—	—	—	—	—	0000
IFS4	008C	—	—	CTMUIF	—	—	—	—	HLVDIF	—	—	—	—	—	—	U1ERIF	—	0000
IEC0	0094	NVMIE	—	AD1IE	U1TXIE	U1RXIE	SPI1IE	SPF1IE	T3IE	T2IE	—	—	—	T1IE	OC1IE	IC1IE	INT0IE	0000
IEC1	0096	—	—	INT2IE	—	—	—	—	—	—	—	—	INT1IE	CNIE	CMIE	MI2C1IE	SI2C1IE	0000
IEC3	009A	—	—	—	—	—	—	—	—	—	—	—	—	—	—	—	—	0000
IEC4	009C	—	—	CTMUIE	—	—	—	—	HLVDIE	—	—	—	—	—	—	U1ERIE	—	0000
IPC0	00A4	—	T1IP2	T1IP1	T1IP0	—	OC1IP2	OC1IP1	OC1IP0	—	IC1IP2	IC1IP1	IC1IP0	—	INT0IP2	INT0IP1	INT0IP0	4444
IPC1	00A6	—	T2IP2	T2IP1	T2IP0	—	—	—	—	—	—	—	—	—	—	—	—	4444
IPC2	00A8	—	U1RXIP2	U1RXIP1	U1RXIP0	—	SPI1IP2	SPI1IP1	SPI1IP0	—	SPF1IP2	SPF1IP1	SPF1IP0	—	T3IP2	T3IP1	T3IP0	4444
IPC3	00AA	—	NVMIP2	NVMIP1	NVMIP0	—	—	—	—	—	AD1IP2	AD1IP1	AD1IP0	—	U1TXIP2	U1TXIP1	U1TXIP0	4044
IPC4	00AC	—	CNIP2	CNIP1	CNIP0	—	CMIP2	CMIP1	CMIP0	—	MI2C1P2	MI2C1P1	MI2C1P0	—	SI2C1P2	SI2C1P1	SI2C1P0	4444
IPC5	00AE	—	—	—	—	—	—	—	—	—	—	—	—	—	INT1IP2	INT1IP1	INT1IP0	0004
IPC7	00B2	—	—	—	—	—	—	—	—	—	INT2IP2	INT2IP1	INT2IP0	—	—	—	—	4440
IPC16	00C4	—	—	—	—	—	—	—	—	—	U1ERIP2	U1ERIP1	U1ERIP0	—	—	—	—	4440
IPC18	00C8	—	—	—	—	—	—	—	—	—	—	—	—	—	HLVDIP2	HLVDIP1	HLVDIP0	0004
IPC19	00CA	—	—	—	—	—	—	—	—	—	CTMUIP2	CTMUIP1	CTMUIP0	—	—	—	—	0040
INTTREG	00E0	CPUIRQ	—	VHOLD	—	ILR3	ILR2	ILR1	ILR0	—	VECNUM6	VECNUM5	VECNUM4	VECNUM3	VECNUM2	VECNUM1	VECNUM0	0000

Legend: — = unimplemented, read as '0'. Reset values are shown in hexadecimal.

Preliminary

© 2009 Microchip Technology Inc.

TABLE 4-6: TIMER REGISTER MAP

File Name	Addr	Bit 15	Bit 14	Bit 13	Bit 12	Bit 11	Bit 10	Bit 9	Bit 8	Bit 7	Bit 6	Bit 5	Bit 4	Bit 3	Bit 2	Bit 1	Bit 0	All Resets
TMR1	0100	Timer1 Register																0000
PR1	0102	Timer1 Period Register																FFFF
T1CON	0104	TON	—	TSIDL	—	—	—	—	—	—	TGATE	TCKPS1	TCKPS0	—	TSYNC	TCS	—	0000
TMR2	0106	Timer2 Register																0000
TMR3HLD	0108	Timer3 Holding Register (for 32-bit timer operations only)																0000
TMR3	010A	Timer3 Register																0000
PR2	010C	Timer2 Period Register																FFFF
PR3	010E	Timer3 Period Register																FFFF
T2CON	0110	TON	—	TSIDL	—	—	—	—	—	—	TGATE	TCKPS1	TCKPS0	T32	—	TCS	—	0000
T3CON	0112	TON	—	TSIDL	—	—	—	—	—	—	TGATE	TCKPS1	TCKPS0	—	—	TCS	—	0000

Legend: — = unimplemented, read as '0'. Reset values are shown in hexadecimal.

TABLE 4-7: INPUT CAPTURE REGISTER MAP

File Name	Addr	Bit 15	Bit 14	Bit 13	Bit 12	Bit 11	Bit 10	Bit 9	Bit 8	Bit 7	Bit 6	Bit 5	Bit 4	Bit 3	Bit 2	Bit 1	Bit 0	All Resets
IC1BUF	0140	Input Capture 1 Register																FFFF
IC1CON	0142	—	—	ICSIDL	—	—	—	—	—	ICTMR	ICI1	ICI0	ICOV	ICBNE	ICM2	ICM1	ICM0	0000

Legend: — = unimplemented, read as '0'. Reset values are shown in hexadecimal.

TABLE 4-8: OUTPUT COMPARE REGISTER MAP

File Name	Addr	Bit 15	Bit 14	Bit 13	Bit 12	Bit 11	Bit 10	Bit 9	Bit 8	Bit 7	Bit 6	Bit 5	Bit 4	Bit 3	Bit 2	Bit 1	Bit 0	All Resets
OC1RS	0180	Output Compare 1 Secondary Register																FFFF
OC1R	0182	Output Compare 1 Register																FFFF
OC1CON	0184	—	—	OCSIDL	—	—	—	—	—	—	—	—	OCFLT	OCTSEL	OCM2	OCM1	OCM0	0000

Legend: — = unimplemented, read as '0'. Reset values are shown in hexadecimal.

© 2009 Microchip Technology Inc.

TABLE 4-9: I²C™ REGISTER MAP

File Name	Addr	Bit 15	Bit 14	Bit 13	Bit 12	Bit 11	Bit 10	Bit 9	Bit 8	Bit 7	Bit 6	Bit 5	Bit 4	Bit 3	Bit 2	Bit 1	Bit 0	All Resets
I2C1RCV	0200	—	—	—	—	—	—	—	—	I2C1 Receive Register								0000
I2C1TRN	0202	—	—	—	—	—	—	—	—	I2C1 Transmit Register								00FF
I2C1BRG	0204	—	—	—	—	—	—	—	I2C1 Baud Rate Generator Register									0000
I2C1CON	0206	I2CEN	—	I2CSIDL	SCLREL	IPMIEN	A10M	DISSLW	SMEN	GCEN	STREN	ACKDT	ACKEN	RCEN	PEN	RSEN	SEN	1000
I2C1STAT	0208	ACKSTAT	TRSTAT	—	—	—	BCL	GCSTAT	ADD10	IWCOL	I2COV	D/$\overline{A}$	P	S	R/$\overline{W}$	RBF	TBF	0000
I2C1ADD	020A	—	—	—	—	—	—	I2C1 Address Register										0000
I2C1MSK	020C	—	—	—	—	—	—	AMSK9	AMSK8	AMSK7	AMSK6	AMSK5	AMSK4	AMSK3	AMSK2	AMSK1	AMSK0	0000

Legend: — = unimplemented, read as '0'. Reset values are shown in hexadecimal.

TABLE 4-10: UART REGISTER MAP

File Name	Addr	Bit 15	Bit 14	Bit 13	Bit 12	Bit 11	Bit 10	Bit 9	Bit 8	Bit 7	Bit 6	Bit 5	Bit 4	Bit 3	Bit 2	Bit 1	Bit 0	All Resets
U1MODE	0220	UARTEN	—	USIDL	IREN	RTSMD	—	UEN1	UEN0	WAKE	LPBACK	ABAUD	RXINV	BRGH	PDSEL1	PDSEL0	STSEL	0000
U1STA	0222	UTXISEL1	UTXINV	UTXISEL0	—	UTXBRK	UTXEN	UTXBF	TRMT	URXISEL1	URXISEL0	ADDEN	RIDLE	PERR	FERR	OERR	URXDA	0110
U1TXREG	0224	—	—	—	—	—	—	—	UART1 Transmit Register									0000
U1RXREG	0226	—	—	—	—	—	—	—	UART1 Receive Register									0000
U1BRG	0228	Baud Rate Generator Prescaler Register																0000

Legend: — = unimplemented, read as '0'. Reset values are shown in hexadecimal.

TABLE 4-11: SPI REGISTER MAP

File Name	Addr	Bit 15	Bit 14	Bit 13	Bit 12	Bit 11	Bit 10	Bit 9	Bit 8	Bit 7	Bit 6	Bit 5	Bit 4	Bit 3	Bit 2	Bit 1	Bit 0	All Resets
SPI1STAT	0240	SPIEN	—	SPISIDL	—	—	SPIBEC2	SPIBEC1	SPIBEC0	SRMPT	SPIROV	SRXMPT	SISEL2	SISEL1	SISEL0	SPITBF	SPIRBF	0000
SPI1CON1	0242	—	—	—	DISSCK	DISSDO	MODE16	SMP	CKE	SSEN	CKP	MSTEN	SPRE2	SPRE1	SPRE0	PPRE1	PPRE0	0000
SPI1CON2	0244	FRMEN	SPIFSD	SPIFPOL	—	—	—	—	—	—	—	—	—	—	—	SPIFE	SPIBEN	0000
SPI1BUF	0248	SPI1 Transmit/Receive Buffer																0000

Legend: — = unimplemented, read as '0'. Reset values are shown in hexadecimal.

Preliminary
© 2009 Microchip Technology Inc.

TABLE 4-12: PORTA REGISTER MAP

File Name	Addr	Bit 15	Bit 14	Bit 13	Bit 12	Bit 11	Bit 10	Bit 9	Bit 8	Bit 7	Bit 6	Bit 5(1)	Bit 4	Bit 3	Bit 2	Bit 1	Bit 0	All Resets
TRISA	02C0	—	—	—	—	—	—	—	—	—	TRISA6	—	TRISA4	TRISA3(2,3)	TRISA2(2)	TRISA1	TRISA0	00DF
PORTA	02C2	—	—	—	—	—	—	—	—	—	RA6	RA5	RA4	RA3(2,3)	RA2(2)	RA1	RA0	xxxx
LATA	02C4	—	—	—	—	—	—	—	—	—	LATA6	—	LATA4	LATA3(2,3)	LATA2(2)	LATA1	LATA0	xxxx
ODCA	02C6	—	—	—	—	—	—	—	—	—	ODA6	—	ODA4	ODA3(2,3)	ODA2(2)	ODA1	ODA0	0000

Legend: — = unimplemented, read as '0'. Reset values are shown in hexadecimal.

Note 1: Bit available only when MCLRE = 0.
2: Bits are available only when the primary oscillator is disabled (POSCMD1:POSCMD0 = 00); otherwise read as '0'.
3: Bits are available only when the primary oscillator is disabled or EC mode is selected (POSCMD1:POSCMD0 = 00 or 11) and CLKO is disabled (OSCIOFNC = 0); otherwise read as '0'.

TABLE 4-13: PORTB REGISTER MAP

File Name	Addr	Bit 15	Bit 14	Bit 13	Bit 12	Bit 11	Bit 10	Bit 9	Bit 8	Bit 7	Bit 6	Bit 5	Bit 4	Bit 3	Bit 2	Bit 1	Bit 0	All Resets
TRISB	02C8	TRISB15	TRISB14	TRISB13(1)	TRISB12(1)	—	—	TRISB9	TRISB8	TRISB7	—	—	TRISB4	—	TRISB2(1)	TRISB1(1)	TRISB0(1)	FFFF
PORTB	02CA	RB15	RB14	RB13(1)	RB12(1)	—	—	RB9	RB8	RB7	—	—	RB4	—	RB2(1)	RB1(1)	RB0(1)	xxxx
LATB	02CC	LATB15	LATB14	LATB13(1)	LATB12(1)	—	—	LATB9	LATB8	LATB7	—	—	LATB4	—	LATB2(1)	LATB1(1)	LATB0(1)	xxxx
ODCB	02CE	ODB15	ODB14	ODB13(1)	ODB12(1)	—	—	ODB9	ODB8	ODB7	—	—	ODB4	—	ODB2(1)	ODB1(1)	ODB(1)0	0000

Legend: — = unimplemented, read as '0'. Reset values are shown in hexadecimal.

Note 1: These bits are not implemented on 14-pin devices.

TABLE 4-14: PAD CONFIGURATION REGISTER MAP

File Name	Addr	Bit 15	Bit 14	Bit 13	Bit 12	Bit 11	Bit 10	Bit 9	Bit 8	Bit 7	Bit 6	Bit 5	Bit 4	Bit 3	Bit 2	Bit 1	Bit 0	All Resets
PADCFG1	02FC	—	—	—	—	—	—	—	—	—	—	—	SMBUSDEL	OC1TRIS	—	—	—	0000

Legend: — = unimplemented, read as '0'. Reset values are shown in hexadecimal.

© 2009 Microchip Technology Inc.

TABLE 4-15: ADC REGISTER MAP

File Name	Addr	Bit 15	Bit 14	Bit 13	Bit 12	Bit 11	Bit 10	Bit 9	Bit 8	Bit 7	Bit 6	Bit 5	Bit 4	Bit 3	Bit 2	Bit 1	Bit 0	All Resets
ADC1BUF0	0300	ADC Data Buffer 0																xxxx
ADC1BUF1	0302	ADC Data Buffer 1																xxxx
ADC1BUF2	0304	ADC Data Buffer 2																xxxx
ADC1BUF3	0306	ADC Data Buffer 3																xxxx
ADC1BUF4	0308	ADC Data Buffer 4																xxxx
ADC1BUF5	030A	ADC Data Buffer 5																xxxx
ADC1BUF6	030C	ADC Data Buffer 6																xxxx
ADC1BUF7	030E	ADC Data Buffer 7																xxxx
ADC1BUF8	0310	ADC Data Buffer 8																xxxx
ADC1BUF9	0312	ADC Data Buffer 9																xxxx
ADC1BUFA	0314	ADC Data Buffer 10																xxxx
ADC1BUFB	0316	ADC Data Buffer 11																xxxx
ADC1BUFC	0318	ADC Data Buffer 12																xxxx
ADC1BUFD	031A	ADC Data Buffer 13																xxxx
ADC1BUFE	031C	ADC Data Buffer 14																xxxx
ADC1BUFF	031E	ADC Data Buffer 15																xxxx
AD1CON1	0320	ADON	—	ADSIDL	—	—	—	FORM1	FORM0	SSRC2	SSRC1	SSRC0	—	—	ASAM	SAMP	DONE	0000
AD1CON2	0322	VCFG2	VCFG1	VCFG0	OFFCAL	—	CSCNA	—	—	BUFS	—	SMPI3	SMPI2	SMPI1	SMPI0	BUFM	ALTS	0000
AD1CON3	0324	ADRC	—	—	SAMC4	SAMC3	SAMC2	SAMC1	SAMC0	—	—	ADCS5	ADCS4	ADCS3	ADCS2	ADCS1	ADCS0	0000
AD1CHS	0328	CH0NB	—	—	—	CH0SB3	CH0SB2	CH0SB1	CH0SB0	CH0NA	—	—	CH0SA4	CH0SA3	CH0SA2	CH0SA1	CH0SA0	0000
AD1PCFG	032C	—	—	—	PCFG12(1)	PCFG11(1)	PCFG10	—	—	—	—	PCFG5	PCFG4	PCFG3	PCFG2	PCFG1	PCFG0	0000
AD1CSSL	0330	—	—	—	CSSL12(1)	CSSL11(1)	CSSL10	—	—	—	—	CSSL5	CSSL4	CSSL3	CSSL2	CSSL1	CSSL0	0000

Legend: — = unimplemented, read as '0'. Reset values are shown in hexadecimal.

Note 1: These bits are not implemented on 14-pin devices.

TABLE 4-16: CTMU REGISTER MAP

File Name	Addr	Bit 15	Bit 14	Bit 13	Bit 12	Bit 11	Bit 10	Bit 9	Bit 8	Bit 7	Bit 6	Bit 5	Bit 4	Bit 3	Bit 2	Bit 1	Bit 0	All Resets
CTMUCON	033C	CTMUEN	—	CTMUSIDL	TGEN	EDGEN	EDGSEQEN	IDISSEN	CTTRIG	EDG2POL	EDG2SEL1	EDG2SEL0	EDG1POL	EDG1SEL1	EDG1SEL0	EDG2STAT	EDG1STAT	0000
CTMUICON	033E	ITRIM5	ITRIM4	ITRIM3	ITRIM2	ITRIM1	ITRIM0	IRNG1	IRNG0	—	—	—	—	—	—	—	—	0000

Legend: — = unimplemented, read as '0'. Reset values are shown in hexadecimal.

Preliminary

© 2009 Microchip Technology Inc.

TABLE 4-17: DUAL COMPARATOR REGISTER MAP

File Name	Addr	Bit 15	Bit 14	Bit 13	Bit 12	Bit 11	Bit 10	Bit 9	Bit 8	Bit 7	Bit 6	Bit 5	Bit 4	Bit 3	Bit 2	Bit 1	Bit 0	All Resets
CMSTAT	0630	CMSIDL	—	—	—	—	—	C2EVT	C1EVT	—	—	—	—	—	—	C2OUT	C1OUT	0000
CVRCON	0632	—	—	—	—	—	—	—	—	CVREN	CVROE	CVRR	CVRSS	CVR3	CVR2	CVR1	CVR0	0000
CM1CON	0634	CON	COE	CPOL	CLPWR	—	—	CEVT	COUT	EVPOL1	EVPOL0	—	CREF	—	—	CCH1	CCH0	0000
CM2CON	0636	CON	COE	CPOL	CLPWR	—	—	CEVT	COUT	EVPOL1	EVPOL0	—	CREF	—	—	CCH1	CCH0	0000

Legend: — = unimplemented, read as '0'. Reset values are shown in hexadecimal.

TABLE 4-18: CLOCK CONTROL REGISTER MAP

File Name	Addr	Bit 15	Bit 14	Bit 13	Bit 12	Bit 11	Bit 10	Bit 9	Bit 8	Bit 7	Bit 6	Bit 5	Bit 4	Bit 3	Bit 2	Bit 1	Bit 0	All Resets
RCON	0740	TRAPR	IOPUWR	SBOREN	—	—	DPSLP	—	PMSLP	EXTR	SWR	SWDTEN	WDTO	SLEEP	IDLE	BOR	POR	**(Note 1)**
OSCCON	0742	—	COSC2	COSC1	COSC0	—	NOSC2	NOSC1	NOSC0	CLKLOCK	—	LOCK	—	CF	—	SOSCEN	OSWEN	**(Note 2)**
CLKDIV	0744	ROI	DOZE2	DOZE1	DOZE0	DOZEN	RCDIV2	RCDIV1	RCDIV0	—	—	—	—	—	—	—	—	3140
OSCTUN	0748	—	—	—	—	—	—	—	—	—	—	TUN5	TUN4	TUN3	TUN2	TUN1	TUN0	0000
REFOCON	074E	ROEN	—	ROSSLP	ROSEL	RODIV3	RODIV2	RODIV1	RODIV0	—	—	—	—	—	—	—	—	0000
HLVDCON	0756	HLVDEN	—	HLSIDL	—	—	—	—	—	VDIR	BGVST	IRVST	—	HLVDL3	HLVDL2	HLVDL1	HLVDL0	0000

Legend: — = unimplemented, read as '0'. Reset values are shown in hexadecimal.

Note 1: RCON register Reset values are dependent on type of Reset.
2: OSCCON register Reset values are dependent on configuration fuses and by type of Reset.

TABLE 4-19: DEEP SLEEP REGISTER MAP

File Name	Addr	Bit 15	Bit 14	Bit 13	Bit 12	Bit 11	Bit 10	Bit 9	Bit 8	Bit 7	Bit 6	Bit 5	Bit 4	Bit 3	Bit 2	Bit 1	Bit 0	All Resets(1)
DSCON	0758	DSEN	—	—	—	—	—	—	—	—	—	—	—	—	—	DSBOR	RELEASE	0000
DSWSRC	075A	—	—	—	—	—	—	—	DSINT0	DSFLT	—	—	DSWDT	—	DSMCLR	—	DSPOR	0000
DSGPR0	075C	Deep Sleep General Purpose Register 0																0000
DSGPR1	075E	Deep Sleep General Purpose Register 1																0000

Legend: — = unimplemented, read as '0'. Reset values are shown in hexadecimal.
Note 1: The Deep Sleep registers are only reset on a VDD POR event.

© 2009 Microchip Technology Inc.

TABLE 4-20: NVM REGISTER MAP

File Name	Addr	Bit 15	Bit 14	Bit 13	Bit 12	Bit 11	Bit 10	Bit 9	Bit 8	Bit 7	Bit 6	Bit 5	Bit 4	Bit 3	Bit 2	Bit 1	Bit 0	All Resets
NVMCON	0760	WR	WREN	WRERR	PGMONLY	—	—	—	—	—	ERASE	NVMOP5	NVMOP4	NVMOP3	NVMOP2	NVMOP1	NVMOP0	0000(1)
NVMKEY	0766	—	—	—	—	—	—	—	—	NVMKEY7	NVMKEY6	NVMKEY5	NVMKEY4	NVMKEY3	NVMKEY2	NVMKEY1	NVMKEY0	0000

Legend: — = unimplemented, read as '0'. Reset values are shown in hexadecimal.

Note 1: Reset value shown is for POR only. Value on other Reset states is dependent on the state of memory write or erase operations at the time of Reset.

TABLE 4-21: PMD REGISTER MAP

File Name	Addr	Bit 15	Bit 14	Bit 13	Bit 12	Bit 11	Bit 10	Bit 9	Bit 8	Bit 7	Bit 6	Bit 5	Bit 4	Bit 3	Bit 2	Bit 1	Bit 0	All Resets
PMD1	0770	—	—	T3MD	T2MD	T1MD	—	—	—	I2C1MD	—	U1MD	—	SPI1MD	—	—	ADC1MD	0000
PMD2	0772	—	—	—	—	—	—	—	IC1MD	—	—	—	—	—	—	—	OC1MD	0000
PMD3	0774	—	—	—	—	—	CMPMD	—	—	—	—	—	—	—	—	—	—	0000
PMD4	0776	—	—	—	—	—	—	—	—	—	—	—	—	REFOMD	CTMUMD	HLVDMD	—	0000

Legend: — = unimplemented, read as '0'. Reset values are shown in hexadecimal.

Preliminary

© 2009 Microchip Technology Inc.

4.2.5 SOFTWARE STACK

In addition to its use as a working register, the W15 register in PIC24F devices is also used as a Software Stack Pointer. The pointer always points to the first available free word and grows from lower to higher addresses. It pre-decrements for stack pops and post-increments for stack pushes, as depicted in Figure 4-4.

For a PC push during any `CALL` instruction, the MSB of the PC is zero-extended before the push, ensuring that the MSB is always clear.

> **Note:** A PC push during exception processing will concatenate the SRL register to the MSB of the PC prior to the push.

The Stack Pointer Limit Value (SPLIM) register, associated with the Stack Pointer, sets an upper address boundary for the stack. SPLIM is uninitialized at Reset. As is the case for the Stack Pointer, SPLIM<0> is forced to '0' as all stack operations must be word-aligned. Whenever an EA is generated using W15 as a source or destination pointer, the resulting address is compared with the value in SPLIM. If the contents of the Stack Pointer (W15) and the SPLIM register are equal, and a push operation is performed, a stack error trap will not occur. The stack error trap will occur on a subsequent push operation.

Thus, for example, if it is desirable to cause a stack error trap when the stack grows beyond address 09FF in RAM, initialize the SPLIM with the value, 09FD.

Similarly, a Stack Pointer underflow (stack error) trap is generated when the Stack Pointer address is found to be less than 0800h. This prevents the stack from interfering with the Special Function Register (SFR) space.

> **Note:** A write to the SPLIM register should not be immediately followed by an indirect read operation using W15.

FIGURE 4-4: CALL STACK FRAME

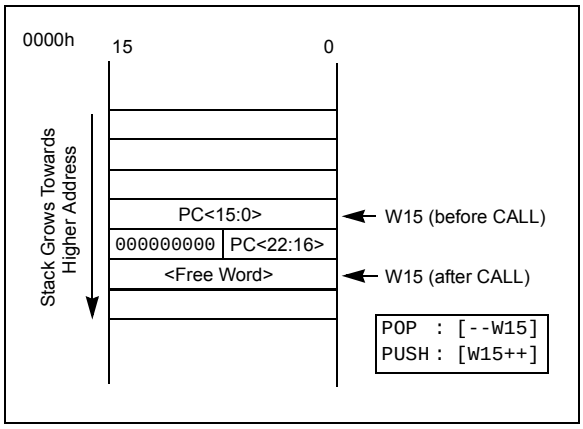

4.3 Interfacing Program and Data Memory Spaces

The PIC24F architecture uses a 24-bit wide program space and 16-bit wide data space. The architecture is also a modified Harvard scheme, meaning that data can also be present in the program space. To use this data successfully, it must be accessed in a way that preserves the alignment of information in both spaces.

Apart from the normal execution, the PIC24F architecture provides two methods by which the program space can be accessed during operation:

- Using table instructions to access individual bytes or words anywhere in the program space
- Remapping a portion of the program space into the data space, PSV

Table instructions allow an application to read or write small areas of the program memory. This makes the method ideal for accessing data tables that need to be updated from time to time. It also allows access to all bytes of the program word. The remapping method allows an application to access a large block of data on a read-only basis, which is ideal for look ups from a large table of static data. It can only access the least significant word (lsw) of the program word.

4.3.1 ADDRESSING PROGRAM SPACE

Since the address ranges for the data and program spaces are 16 and 24 bits, respectively, a method is needed to create a 23-bit or 24-bit program address from 16-bit data registers. The solution depends on the interface method to be used.

For table operations, the 8-bit Table Memory Page Address register (TBLPAG) is used to define a 32K word region within the program space. This is concatenated with a 16-bit EA to arrive at a full 24-bit program space address. In this format, the Most Significant bit (MSb) of TBLPAG is used to determine if the operation occurs in the user memory (TBLPAG<7> = `0`) or the configuration memory (TBLPAG<7> = `1`).

For remapping operations, the 8-bit Program Space Visibility Page Address register (PSVPAG) is used to define a 16K word page in the program space. When the MSb of the EA is '`1`', PSVPAG is concatenated with the lower 15 bits of the EA to form a 23-bit program space address. Unlike the table operations, this limits remapping operations strictly to the user memory area.

See Table 4-22 and Figure 4-5 to know how the program EA is created for table operations and remapping accesses from the data EA. Here, P<23:0> refers to a program space word, whereas D<15:0> refers to a data space word.

TABLE 4-22: PROGRAM SPACE ADDRESS CONSTRUCTION

Access Type	Access Space	Program Space Address				
		<23>	<22:16>	<15>	<14:1>	<0>
Instruction Access (Code Execution)	User	0	PC<22:1>			0
		0xx xxxx xxxx xxxx xxxx xxx0				
TBLRD/TBLWT (Byte/Word Read/Write)	User	TBLPAG<7:0>		Data EA<15:0>		
		0xxx xxxx		xxxx xxxx xxxx xxxx		
	Configuration	TBLPAG<7:0>		Data EA<15:0>		
		1xxx xxxx		xxxx xxxx xxxx xxxx		
Program Space Visibility (Block Remap/Read)	User	0	PSVPAG<7:0>(2)		Data EA<14:0>(1)	
		0	xxxx xxxx		xxx xxxx xxxx xxxx	

Note 1: Data EA<15> is always '1' in this case, but is not used in calculating the program space address. Bit 15 of the address is PSVPAG<0>.

2: PSVPAG can have only one value ('00' to access program memory) on the PIC24F04KA201 family.

FIGURE 4-5: DATA ACCESS FROM PROGRAM SPACE ADDRESS GENERATION

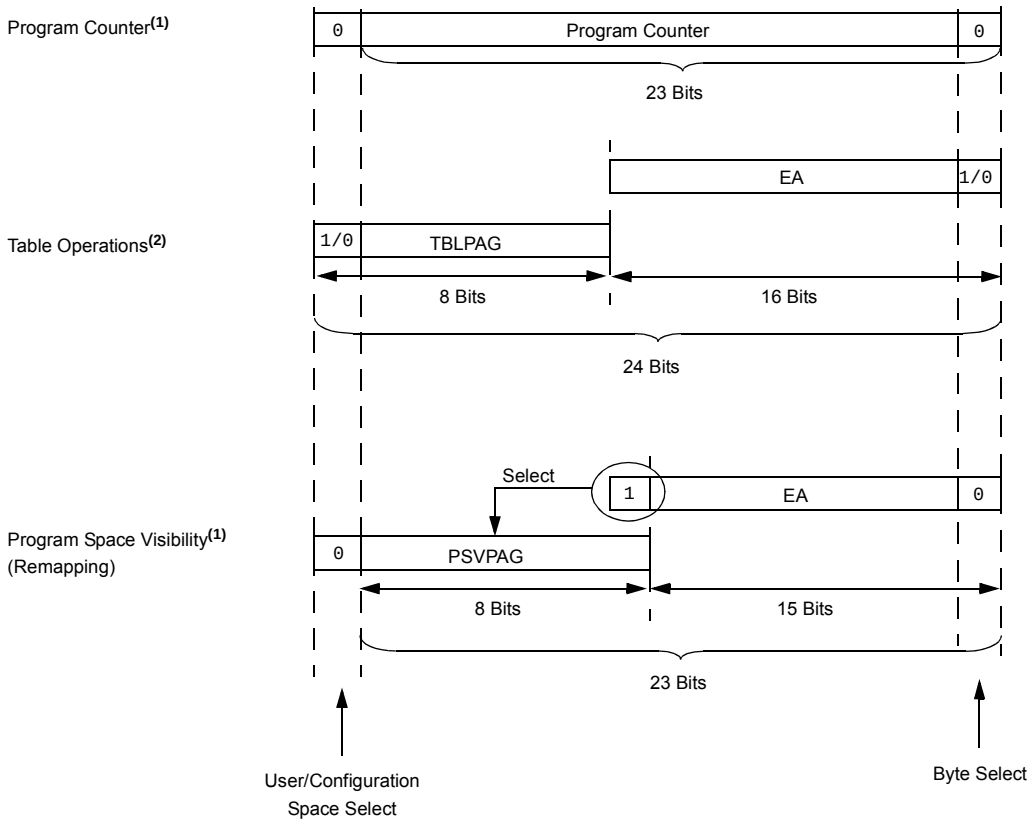

Note 1: The LSb of program space addresses is always fixed as '0' in order to maintain word alignment of data in the program and data spaces.

2: Table operations are not required to be word-aligned. Table read operations are permitted in the configuration memory space.

 © 2009 Microchip Technology Inc.

4.3.2 DATA ACCESS FROM PROGRAM MEMORY USING TABLE INSTRUCTIONS

The TBLRDL and TBLWTL instructions offer a direct method of reading or writing the lower word of any address within the program memory without going through data space. The TBLRDH and TBLWTH instructions are the only method to read or write the upper 8 bits of a program space word as data.

The PC is incremented by 2 for each successive 24-bit program word. This allows program memory addresses to directly map to data space addresses. Program memory can thus be regarded as two 16-bit word-wide address spaces, residing side by side, each with the same address range. TBLRDL and TBLWTL access the space which contains the least significant data word, and TBLRDH and TBLWTH access the space which contains the upper data byte.

Two table instructions are provided to move byte or word-sized (16-bit) data to and from program space. Both function as either byte or word operations.

1. TBLRDL (Table Read Low): In Word mode, it maps the lower word of the program space location (P<15:0>) to a data address (D<15:0>).

   In Byte mode, either the upper or lower byte of the lower program word is mapped to the lower byte of a data address. The upper byte is selected when byte select is ‘1’; the lower byte is selected when it is ‘0’.

2. TBLRDH (Table Read High): In Word mode, it maps the entire upper word of a program address (P<23:16>) to a data address. Note that D<15:8>, the ‘phantom’ byte, will always be ‘0’.

   In Byte mode, it maps the upper or lower byte of the program word to D<7:0> of the data address, as above. Note that the data will always be ‘0’ when the upper ‘phantom’ byte is selected (byte select = 1).

In a similar fashion, two table instructions, TBLWTH and TBLWTL, are used to write individual bytes or words to a program space address. The details of their operation are explained in **Section 5.0 “Flash Program Memory”**.

For all table operations, the area of program memory space to be accessed is determined by the Table Memory Page Address register (TBLPAG). TBLPAG covers the entire program memory space of the device, including user and configuration spaces. When TBLPAG<7> = 0, the table page is located in the user memory space. When TBLPAG<7> = 1, the page is located in configuration space.

Note:	Only table read operations will execute in the configuration memory space, and only then, in implemented areas such as the Device ID. Table write operations are not allowed.

FIGURE 4-6: ACCESSING PROGRAM MEMORY WITH TABLE INSTRUCTIONS

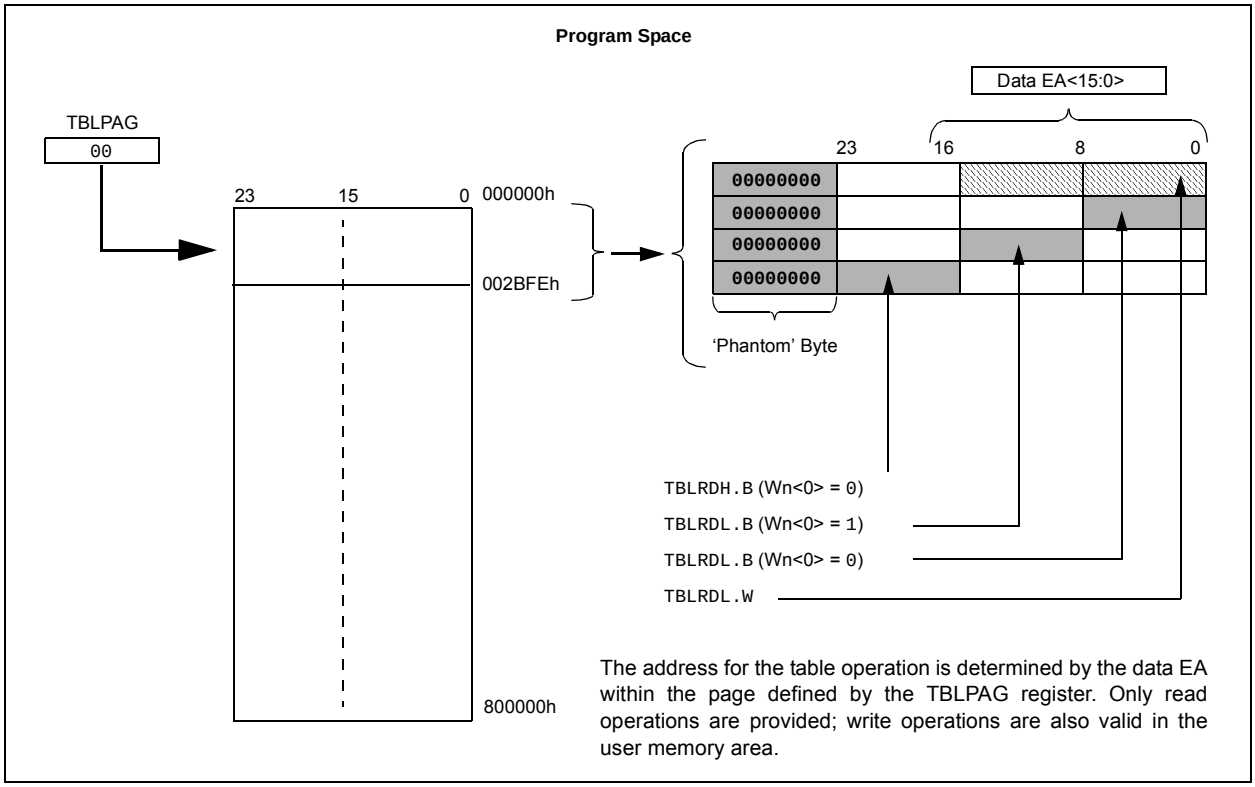

4.3.3 READING DATA FROM PROGRAM MEMORY USING PROGRAM SPACE VISIBILITY

The upper 32 Kbytes of data space may optionally be mapped into an 8K word page (in PIC24F08KA1XX devices) and a 16K word page (in PIC24F16KA1XX devices) of the program space. This provides transparent access of stored constant data from the data space without the need to use special instructions (i.e., `TBLRDL/H`).

Program space access through the data space occurs if the MSb of the data space EA is '1', and PSV is enabled by setting the PSV bit in the CPU Control (CORCON<2>) register. The location of the program memory space to be mapped into the data space is determined by the Program Space Visibility Page Address register (PSVPAG). This 8-bit register defines any one of 256 possible pages of 16K words in program space. In effect, PSVPAG functions as the upper 8 bits of the program memory address, with the 15 bits of the EA functioning as the lower bits.

By incrementing the PC by 2 for each program memory word, the lower 15 bits of data space addresses directly map to the lower 15 bits in the corresponding program space addresses.

Data reads from this area add an additional cycle to the instruction being executed, since two program memory fetches are required.

Although each data space address, 8000h and higher, maps directly into a corresponding program memory address (see Figure 4-7), only the lower 16 bits of the 24-bit program word are used to contain the data. The upper 8 bits of any program space locations used as data should be programmed with '`1111 1111`' or '`0000 0000`' to force a `NOP`. This prevents possible issues should the area of code ever be accidentally executed.

Note:	PSV access is temporarily disabled during table reads/writes.

For operations that use PSV and are executed outside a `REPEAT` loop, the `MOV` and `MOV.D` instructions will require one instruction cycle in addition to the specified execution time. All other instructions will require two instruction cycles in addition to the specified execution time.

For operations that use PSV, which are executed inside a `REPEAT` loop, there will be some instances that require two instruction cycles in addition to the specified execution time of the instruction:

- Execution in the first iteration
- Execution in the last iteration
- Execution prior to exiting the loop due to an interrupt
- Execution upon re-entering the loop after an interrupt is serviced

 © 2009 Microchip Technology Inc.

Any other iteration of the REPEAT loop will allow the instruction accessing data, using PSV, to execute in a single cycle.

FIGURE 4-7: PROGRAM SPACE VISIBILITY OPERATION

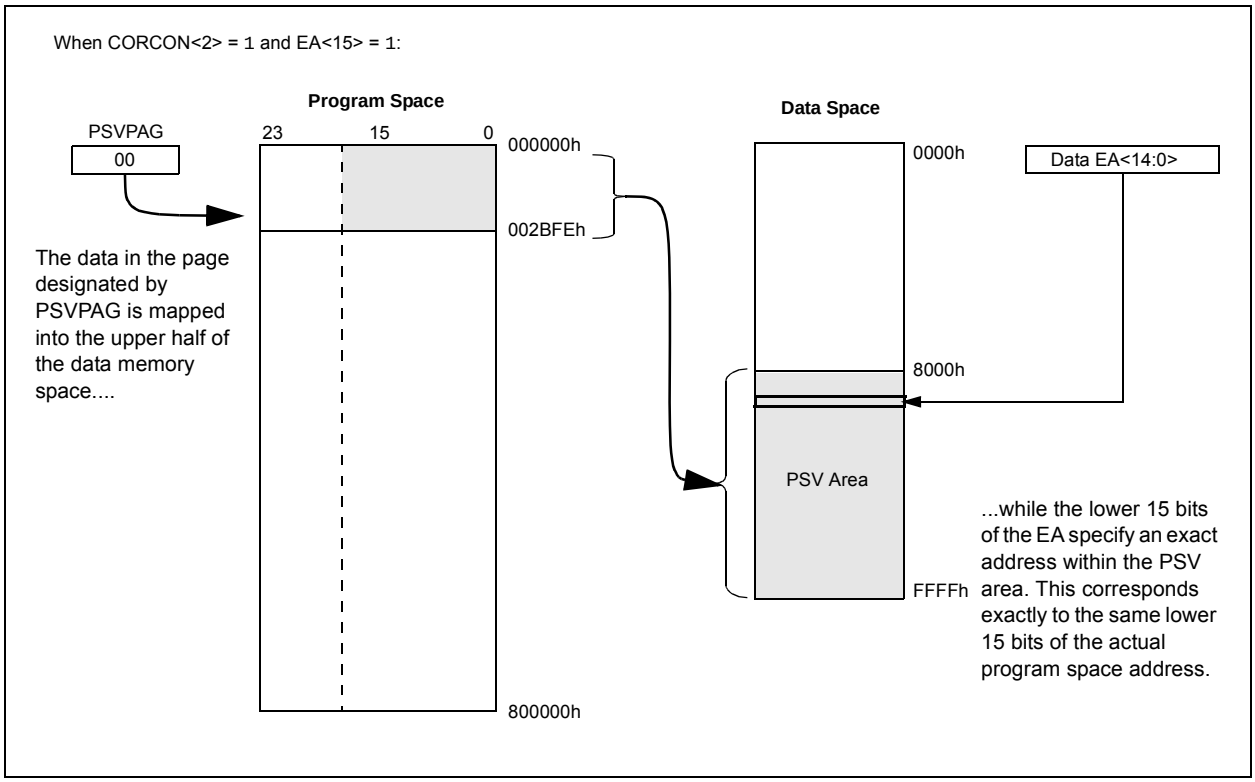

NOTES:

 © 2009 Microchip Technology Inc.

5.0 FLASH PROGRAM MEMORY

Note:	This data sheet summarizes the features of this group of PIC24F devices. It is not intended to be a comprehensive reference source. For more information on Flash programming, refer to the *"PIC24F Family Reference Manual"*, **Section 4. "Program Memory"** (DS39715).

The PIC24F04KA201 family of devices contains internal Flash program memory for storing and executing application code. The memory is readable, writable and erasable when operating with VDD over 1.8V.

Flash memory can be programmed in three ways:

- In-Circuit Serial Programming™ (ICSP™)
- Run-Time Self Programming (RTSP)
- Enhanced In-Circuit Serial Programming (Enhanced ICSP)

ICSP allows a PIC24FXXXX device to be serially programmed while in the end application circuit. This is simply done with two lines for the programming clock and programming data (which are named PGCx and PGDx, respectively), and three other lines for power (VDD), ground (VSS) and Master Clear/Program Mode Entry Voltage (MCLR/VPP). This allows customers to manufacture boards with unprogrammed devices and then program the microcontroller just before shipping the product. This also allows the most recent firmware or custom firmware to be programmed.

Real-Time Streaming Protocol (RTSP) is accomplished using TBLRD (table read) and TBLWT (table write) instructions. With RTSP, the user may write program memory data in blocks of 32 instructions (96 bytes) at a time, and erase program memory in blocks of 32, 64 and 128 instructions (96,192 and 384 bytes) at a time.

The NVMOP<1:0> (NVMCON<1:0>) bits decide the erase block size.

5.1 Table Instructions and Flash Programming

Regardless of the method used, Flash memory programming is done with the table read and write instructions. These allow direct read and write access to the program memory space from the data memory while the device is in normal operating mode. The 24-bit target address in the program memory is formed using the TBLPAG<7:0> bits and the Effective Address (EA) from a W register, specified in the table instruction, as depicted in Figure 5-1.

The TBLRDL and the TBLWTL instructions are used to read or write to bits<15:0> of program memory. TBLRDL and TBLWTL can access program memory in both Word and Byte modes.

The TBLRDH and TBLWTH instructions are used to read or write to bits<23:16> of program memory. TBLRDH and TBLWTH can also access program memory in Word or Byte mode.

FIGURE 5-1: ADDRESSING FOR TABLE REGISTERS

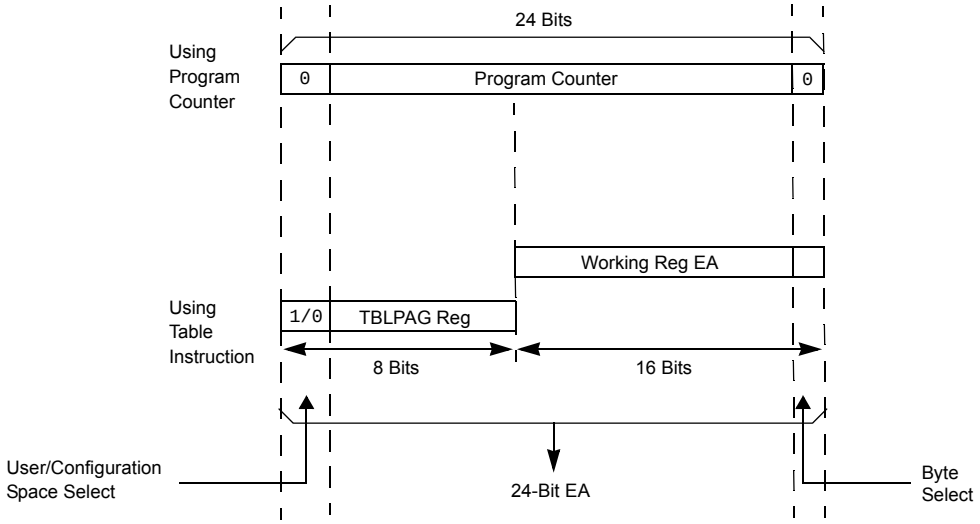

5.2 RTSP Operation

The PIC24F Flash program memory array is organized into rows of 32 instructions or 96 bytes. RTSP allows the user to erase blocks of 1 row, 2 rows and 4 rows (32, 64 and 128 instructions) at a time and to program one row at a time. It is also possible to program single words.

The 1-row (96 bytes), 2-row (192 bytes) and 4-row (384 bytes) erase blocks and single row write block (96 bytes) are edge-aligned, from the beginning of program memory.

When data is written to program memory using `TBLWT` instructions, the data is not written directly to memory. Instead, data written using table writes is stored in holding latches until the programming sequence is executed.

Any number of `TBLWT` instructions can be executed and a write will be successfully performed. However, 32 `TBLWT` instructions are required to write the full row of memory.

The basic sequence for RTSP programming is to set up a Table Pointer, then do a series of `TBLWT` instructions to load the buffers. Programming is performed by setting the control bits in the NVMCON register.

Data can be loaded in any order and the holding registers can be written to multiple times before performing a write operation. Subsequent writes, however, will wipe out any previous writes.

Note:	Writing to a location multiple times without erasing it is not recommended.

All of the table write operations are single-word writes (two instruction cycles), because only the buffers are written. A programming cycle is required for programming each row.

5.3 Enhanced In-Circuit Serial Programming

Enhanced ICSP uses an on-board bootloader, known as the program executive, to manage the programming process. Using an SPI data frame format, the program executive can erase, program and verify program memory. For more information on Enhanced ICSP, see the device programming specification.

5.4 Control Registers

There are two SFRs used to read and write the program Flash memory: NVMCON and NVMKEY.

The NVMCON register (Register 5-1) controls the blocks that need to be erased, which memory type is to be programmed and when the programming cycle starts.

NVMKEY is a write-only register that is used for write protection. To start a programming or erase sequence, the user must consecutively write 55h and AAh to the NVMKEY register. Refer to **Section 5.5 “Programming Operations”** for further details.

5.5 Programming Operations

A complete programming sequence is necessary for programming or erasing the internal Flash in RTSP mode. During a programming or erase operation, the processor stalls (waits) until the operation is finished. Setting the WR bit (NVMCON<15>) starts the operation and the WR bit is automatically cleared when the operation is finished.

 © 2009 Microchip Technology Inc.

REGISTER 5-1: NVMCON: FLASH MEMORY CONTROL REGISTER

R/SO-0, HC	R/W-0	R/W-0	R/W-0	U-0	U-0	U-0	U-0
WR	WREN	WRERR	PGMONLY	—	—	—	—
bit 15							bit 8

U-0	R/W-0	R/W-0	R/W-0	R/W-0	R/W-0	R/W-0	R/W-0
—	ERASE	NVMOP5(1)	NVMOP4(1)	NVMOP3(1)	NVMOP2(1)	NVMOP1(1)	NVMOP0(1)
bit 7							bit 0

Legend:	SO = Settable Only bit	HC = Hardware Clearable bit	
-n = Value at POR	‘1’ = Bit is set	R = Readable bit	W = Writable bit
‘0’ = Bit is cleared	x = Bit is unknown	U = Unimplemented bit, read as ‘0’	

bit 15 **WR:** Write Control bit
- 1 = Initiates a Flash memory program or erase operation. The operation is self-timed and the bit is cleared by hardware once the operation is complete
- 0 = Program or erase operation is complete and inactive

bit 14 **WREN:** Write Enable bit
- 1 = Enable Flash program/erase operations
- 0 = Inhibit Flash program/erase operations

bit 13 **WRERR:** Write Sequence Error Flag bit
- 1 = An improper program or erase sequence attempt or termination has occurred (bit is set automatically on any set attempt of the WR bit)
- 0 = The program or erase operation completed normally

bit 12 **PGMONLY:** Program Only Enable bit

bit 11-7 **Unimplemented:** Read as ‘0’

bit 6 **ERASE:** Erase/Program Enable bit
- 1 = Perform the erase operation specified by NVMOP<5:0> on the next WR command
- 0 = Perform the program operation specified by NVMOP<5:0> on the next WR command

bit 5-0 **NVMOP<5:0>:** Programming Operation Command Byte bits(1)

Erase Operations (when ERASE bit is ‘1’):
- 1010xx = Erase entire boot block (including code-protected boot block)(2)
- 1001xx = Erase entire memory (including boot block, configuration block, general block)(2)
- 011010 = Program/erase 4 rows of Flash memory(3)
- 011001 = Program/erase 2 rows of Flash memory(3)
- 011000 = Program/erase 1 row of Flash memory(3)
- 0101xx = Erase entire configuration block (except code protection bits)
- 0011xx = Erase entire general memory block programming operations

Note 1: All other combinations of NVMOP<5:0> are no operation.
2: Available in ICSP™ mode only. Refer to device programming specification.
3: The address in the Table Pointer decides which rows will be erased.

5.5.1 PROGRAMMING ALGORITHM FOR FLASH PROGRAM MEMORY

The user can program one row of Flash program memory at a time by erasing the programmable row. The general process is:

1. Read a row of program memory (32 instructions) and store in data RAM.
2. Update the program data in RAM with the desired new data.
3. Erase a row (see Example 5-1):
   a) Set the NVMOP bits (NVMCON<5:0>) to '011000' to configure for row erase. Set the ERASE (NVMCON<6>) and WREN (NVMCON<14>) bits.
   b) Write the starting address of the block to be erased into the TBLPAG and W registers.
   c) Write 55h to NVMKEY.
   d) Write AAh to NVMKEY.
   e) Set the WR bit (NVMCON<15>). The erase cycle begins and the CPU stalls for the duration of the erase cycle. When the erase is done, the WR bit is cleared automatically.
4. Write the first 32 instructions from data RAM into the program memory buffers (see Example 5-1).
5. Write the program block to Flash memory:
   a) Set the NVMOP bits to '011000' to configure for row programming. Clear the ERASE bit and set the WREN bit.
   b) Write 55h to NVMKEY.
   c) Write AAh to NVMKEY.
   d) Set the WR bit. The programming cycle begins and the CPU stalls for the duration of the write cycle. When the write to Flash memory is done, the WR bit is cleared automatically.

For protection against accidental operations, the write initiate sequence for NVMKEY must be used to allow any erase or program operation to proceed. After the programming command has been executed, the user must wait for the programming time until programming is complete. The two instructions following the start of the programming sequence should be NOPs, as displayed in Example 5-5.

EXAMPLE 5-1: ERASING A PROGRAM MEMORY ROW – ASSEMBLY LANGUAGE CODE

```
; Set up NVMCON for row erase operation
        MOV     #0x4058, W0                 ;
        MOV     W0, NVMCON                  ; Initialize NVMCON
; Init pointer to row to be ERASED
        MOV     #tblpage(PROG_ADDR), W0     ;
        MOV     W0, TBLPAG                  ; Initialize PM Page Boundary SFR
        MOV     #tbloffset(PROG_ADDR), W0   ; Initialize in-page EA[15:0] pointer
        TBLWTL  W0, [W0]                    ; Set base address of erase block
        DISI    #5                          ; Block all interrupts
                                              for next 5 instructions
        MOV     #0x55, W0
        MOV     W0, NVMKEY                  ; Write the 55 key
        MOV     #0xAA, W1                   ;
        MOV     W1, NVMKEY                  ; Write the AA key
        BSET    NVMCON, #WR                 ; Start the erase sequence
        NOP                                 ; Insert two NOPs after the erase
        NOP                                 ; command is asserted
```

 © 2009 Microchip Technology Inc.

EXAMPLE 5-2: ERASING A PROGRAM MEMORY ROW – 'C' LANGUAGE CODE

```
// C example using MPLAB C30

int __attribute__ ((space(auto_psv))) progAddr = &progAddr;  // Variable located in Pgm Memory
    unsigned int offset;

//Set up pointer to the first memory location to be written

    TBLPAG = __builtin_tblpage(&progAddr);                   // Initialize PM Page Boundary SFR
    offset = &progAddr & 0xFFFF;                             // Initialize lower word of address

    __builtin_tblwtl(offset, 0x0000);                        // Set base address of erase block
                                                             // with dummy latch write

    NVMCON = 0x4058;                                         // Initialize NVMCON

    asm("DISI #5");                                          // Block all interrupts for next 5 instructions
    __builtin_write_NVM();                                   // C30 function to perform unlock
                                                             // sequence and set WR
```

EXAMPLE 5-3: LOADING THE WRITE BUFFERS – ASSEMBLY LANGUAGE CODE

```
; Set up NVMCON for row programming operations
        MOV     #0x4004, W0                   ;
        MOV     W0, NVMCON                    ; Initialize NVMCON
; Set up a pointer to the first program memory location to be written
; program memory selected, and writes enabled
        MOV     #0x0000, W0                   ;
        MOV     W0, TBLPAG                    ; Initialize PM Page Boundary SFR
        MOV     #0x6000, W0                   ; An example program memory address
; Perform the TBLWT instructions to write the latches
; 0th_program_word
        MOV     #LOW_WORD_0, W2               ;
        MOV     #HIGH_BYTE_0, W3              ;
        TBLWTL  W2, [W0]                      ; Write PM low word into program latch
        TBLWTH  W3, [W0++]                    ; Write PM high byte into program latch
; 1st_program_word
        MOV     #LOW_WORD_1, W2               ;
        MOV     #HIGH_BYTE_1, W3              ;
        TBLWTL  W2, [W0]                      ; Write PM low word into program latch
        TBLWTH  W3, [W0++]                    ; Write PM high byte into program latch
;  2nd_program_word
        MOV     #LOW_WORD_2, W2               ;
        MOV     #HIGH_BYTE_2, W3              ;
        TBLWTL  W2, [W0]                      ; Write PM low word into program latch
        TBLWTH  W3, [W0++]                    ; Write PM high byte into program latch
        •
        •
        •
; 32nd_program_word
        MOV     #LOW_WORD_31, W2              ;
        MOV     #HIGH_BYTE_31, W3             ;
        TBLWTL  W2, [W0]                      ; Write PM low word into program latch
        TBLWTH  W3, [W0]                      ; Write PM high byte into program latch
```

EXAMPLE 5-4: LOADING THE WRITE BUFFERS – ‘C’ LANGUAGE CODE

```
// C example using MPLAB C30

   #define NUM_INSTRUCTION_PER_ROW 64
int __attribute__ ((space(auto_psv))) progAddr = &progAddr; // Variable located in Pgm Memory
   unsigned int offset;
   unsigned int i;
   unsigned int progData[2*NUM_INSTRUCTION_PER_ROW];        // Buffer of data to write

   //Set up NVMCON for row programming
   NVMCON = 0x4001;                                         // Initialize NVMCON

   //Set up pointer to the first memory location to be written
   TBLPAG = __builtin_tblpage(&progAddr);                   // Initialize PM Page Boundary SFR
   offset = &progAddr & 0xFFFF;                             // Initialize lower word of address

   //Perform TBLWT instructions to write necessary number of latches
   for(i=0; i < 2*NUM_INSTRUCTION_PER_ROW; i++)
   {
       __builtin_tblwtl(offset, progData[i++]);             // Write to address low word
       __builtin_tblwth(offset, progData[i]);               // Write to upper byte
       offset = offset + 2;                                 // Increment address
   }
```

 © 2009 Microchip Technology Inc.

EXAMPLE 5-5: INITIATING A PROGRAMMING SEQUENCE – ASSEMBLY LANGUAGE CODE

```
        DISI    #5                      ; Block all interrupts
                                          for next 5 instructions
        MOV     #0x55, W0
        MOV     W0, NVMKEY              ; Write the 55 key
        MOV     #0xAA, W1               ;
        MOV     W1, NVMKEY              ; Write the AA key
        BSET    NVMCON, #WR             ; Start the erase sequence
        NOP                             ; 2 NOPs required after setting WR
        NOP                             ;
        BTSC    NVMCON, #15             ; Wait for the sequence to be completed
        BRA     $-2                     ;
```

EXAMPLE 5-6: INITIATING A PROGRAMMING SEQUENCE – 'C' LANGUAGE CODE

```
// C example using MPLAB C30

asm("DISI #5");               // Block all interrupts for next 5 instructions

__builtin_write_NVM();        // Perform unlock sequence and set WR
```

EXAMPLE 5-7: PROGRAMMING A SINGLE WORD OF FLASH PROGRAM MEMORY

```
; Setup a pointer to data Program Memory
MOV     #tblpage(PROG_ADDR), W0         ;
MOV     W0, TBLPAG                      ;Initialize PM Page Boundary SFR
MOV     #tbloffset(PROG_ADDR), W0       ;Initialize a register with program memory address
MOV     #LOW_WORD_N, W2                 ;
MOV     #HIGH_BYTE_N, W3                ;
TBLWTL  W2, [W0]                        ; Write PM low word into program latch
TBLWTH  W3, [W0++]                      ; Write PM high byte into program latch
; Setup NVMCON for programming one word to data Program Memory
MOV     #0x4003, W0                     ;
MOV     W0, NVMCON                      ; Set NVMOP bits to 0011
DISI    #5                              ; Disable interrupts while the KEY sequence is written
MOV     #0x55, W0                       ; Write the key sequence
MOV     W0, NVMKEY
MOV     #0xAA, W0
MOV     W0, NVMKEY
BSET    NVMCON, #WR                     ; Start the write cycle
```

NOTES:

 © 2009 Microchip Technology Inc.

6.0 RESETS

Note:	This data sheet summarizes the features of this group of PIC24F devices. It is not intended to be a comprehensive reference source. For more information on Resets, refer to the *"PIC24F Family Reference Manual"*, **Section 40. "Reset with Programmable Brown-out Reset"** (DS39728).

The Reset module combines all Reset sources and controls the device Master Reset Signal, $\overline{\text{SYSRST}}$. The following is a list of device Reset sources:

- POR: Power-on Reset
- $\overline{\text{MCLR}}$: Pin Reset
- SWR: RESET Instruction
- WDTR: Watchdog Timer Reset
- BOR: Brown-out Reset
- Low-Power BOR/Deep Sleep BOR
- TRAPR: Trap Conflict Reset
- IOPUWR: Illegal Opcode Reset
- UWR: Uninitialized W Register Reset

Figure 6-1 displays a simplified block diagram of the Reset module.

Any active source of Reset will make the $\overline{\text{SYSRST}}$ signal active. Many registers associated with the CPU and peripherals are forced to a known Reset state. Most registers are unaffected by a Reset; their status is unknown on Power-on Reset (POR) and unchanged by all other Resets.

Note:	Refer to the specific peripheral or CPU section of this manual for register Reset states.

All types of device Reset will set a corresponding status bit in the RCON register to indicate the type of Reset (see Register 6-1). A POR will clear all bits except for the BOR and POR bits (RCON<1:0>) which are set. The user may set or clear any bit at any time during code execution. The RCON bits only serve as status bits. Setting a particular Reset status bit in software will not cause a device Reset to occur.

The RCON register also has other bits associated with the Watchdog Timer (WDT) and device power-saving states. The function of these bits is discussed in other sections of this manual.

Note:	The status bits in the RCON register should be cleared after they are read so that the next RCON register value after a device Reset will be meaningful.

FIGURE 6-1: RESET SYSTEM BLOCK DIAGRAM

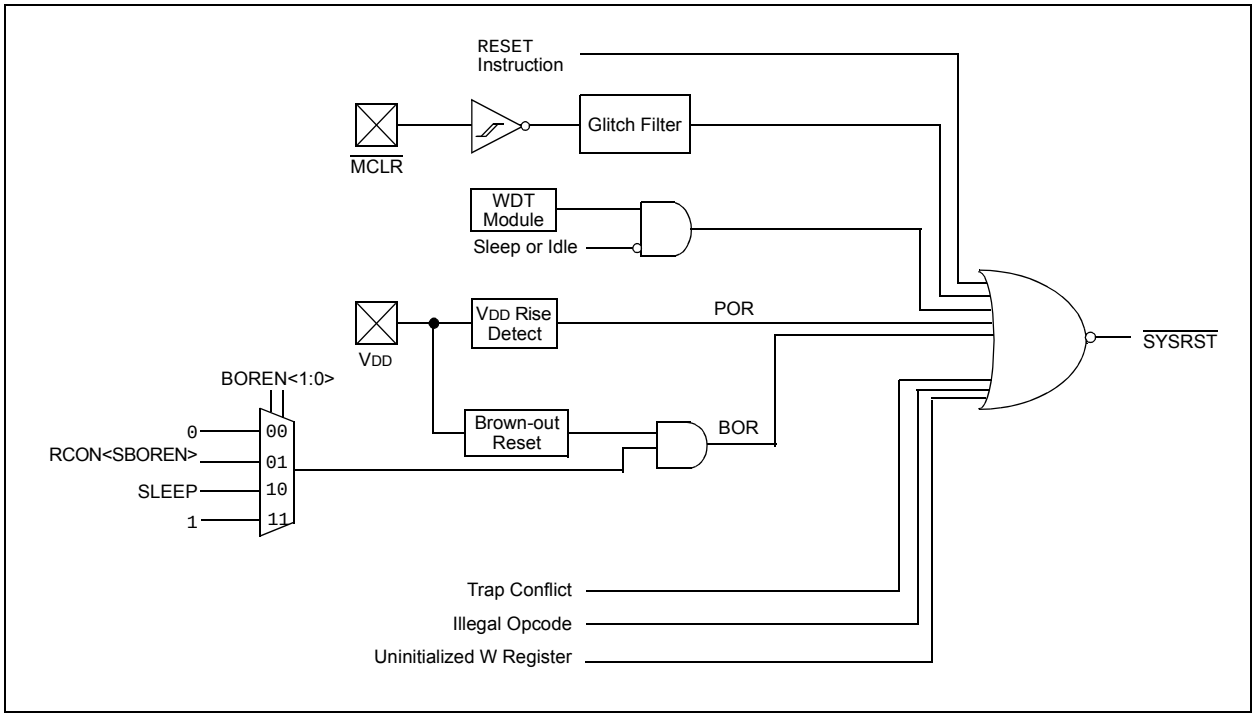

REGISTER 6-1: RCON: RESET CONTROL REGISTER(1)

R/W-0, HS	R/W-0, HS	R/W-0	U-0	U-0	R/C-0, HS	U-0	R/W-0
TRAPR	IOPUWR	SBOREN	—	—	DPSLP	—	PMSLP
bit 15							bit 8

R/W-0, HS	R/W-0, HS	R/W-0, HS	R/W-0, HS	R/W-0, HS	R/W-0, HS	R/W-1, HS	R/W-1, HS
EXTR	SWR	SWDTEN(2)	WDTO	SLEEP	IDLE	BOR	POR
bit 7							bit 0

Legend:	C = Clearable bit	HS = Hardware Settable bit	
R = Readable bit	W = Writable bit	U = Unimplemented bit, read as ‘0’	
-n = Value at POR	‘1’ = Bit is set	‘0’ = Bit is cleared	x = Bit is unknown

bit 15 **TRAPR:** Trap Reset Flag bit
1 = A Trap Conflict Reset has occurred
0 = A Trap Conflict Reset has not occurred

bit 14 **IOPUWR:** Illegal Opcode or Uninitialized W Access Reset Flag bit
1 = An illegal opcode detection, an illegal address mode or uninitialized W register used as an Address Pointer caused a Reset
0 = An illegal opcode or uninitialized W Reset has not occurred

bit 13 **SBOREN:** Software Enable/Disable of BOR bit
1 = BOR is turned on in software
0 = BOR is turned off in software

bit 12-11 **Unimplemented:** Read as ‘0’

bit 10 **DPSLP:** Deep Sleep Mode Flag bit
1 = Deep Sleep has occurred
0 = Deep Sleep has not occurred

bit 9 **Unimplemented:** Read as ‘0’

bit 8 **PMSLP:** Program Memory Power During Sleep/Idle bit
1 = Program memory bias voltage remains powered during Sleep/Idle
0 = Program memory bias voltage is powered down during Sleep/Idle

bit 7 **EXTR:** External Reset ($\overline{\text{MCLR}}$) Pin bit
1 = A Master Clear (pin) Reset has occurred
0 = A Master Clear (pin) Reset has not occurred

bit 6 **SWR:** Software Reset (Instruction) Flag bit
1 = A RESET instruction has been executed
0 = A RESET instruction has not been executed

bit 5 **SWDTEN:** Software Enable/Disable of WDT bit(2)
1 = WDT is enabled
0 = WDT is disabled

bit 4 **WDTO:** Watchdog Timer Time-out Flag bit
1 = WDT time-out has occurred
0 = WDT time-out has not occurred

bit 3 **SLEEP:** Wake-up from Sleep Flag bit
1 = Device has been in Sleep mode
0 = Device has not been in Sleep mode

bit 2 **IDLE:** Wake-up from Idle Flag bit
1 = Device has been in Idle mode
0 = Device has not been in Idle mode

bit 1 **BOR:** Brown-out Reset Flag bit
1 = A Brown-out Reset has occurred (the BOR is also set after a POR)
0 = A Brown-out Reset has not occurred

 © 2009 Microchip Technology Inc.

REGISTER 6-1: RCON: RESET CONTROL REGISTER(1) (CONTINUED)

bit 0 **POR:** Power-on Reset Flag bit
1 = A Power-up Reset has occurred
0 = A Power-up Reset has not occurred

Note 1: All of the Reset status bits may be set or cleared in software. Setting one of these bits in software does not cause a device Reset.

2: If the FWDTEN Configuration bit is '1' (unprogrammed), the WDT is always enabled, regardless of the SWDTEN bit setting.

TABLE 6-1: RESET FLAG BIT OPERATION

Flag Bit	Setting Event	Clearing Event
TRAPR (RCON<15>)	Trap Conflict Event	POR
IOPUWR (RCON<14>)	Illegal Opcode or Uninitialized W Register Access	POR
CM (RCON<9>)	Configuration Mismatch Reset	POR
EXTR (RCON<7>)	$\overline{\text{MCLR}}$ Reset	POR
SWR (RCON<6>)	RESET Instruction	POR
WDTO (RCON<4>)	WDT Time-out	PWRSAV Instruction, POR
SLEEP (RCON<3>)	PWRSAV #SLEEP Instruction	POR
IDLE (RCON<2>)	PWRSAV #IDLE Instruction	POR
BOR (RCON<1>)	POR, BOR	—
POR (RCON<0>)	POR	—
DPSLP (RCON<10>)	PWRSAV #SLEEP instruction with DSCON <DSEN> set	POR

Note: All Reset flag bits may be set or cleared by the user software.

6.1 Clock Source Selection at Reset

If clock switching is enabled, the system clock source at device Reset is chosen as shown in Table 6-2. If clock switching is disabled, the system clock source is always selected according to the oscillator Configuration bits. Refer to **Section 8.0 "Oscillator Configuration"** for further details.

TABLE 6-2: OSCILLATOR SELECTION vs. TYPE OF RESET (CLOCK SWITCHING ENABLED)

Reset Type	Clock Source Determinant
POR	FNOSC Configuration bits (FNOSC<10:8>)
BOR	
$\overline{\text{MCLR}}$	COSC Control bits (OSCCON<14:12>)
WDTO	
SWR	

6.2 Device Reset Times

The Reset times for various types of device Reset are summarized in Table 6-3. Note that the system Reset signal, $\overline{\text{SYSRST}}$, is released after the POR and PWRT delay times expire.

The time at which the device actually begins to execute code will also depend on the system oscillator delays, which include the Oscillator Start-up Timer (OST) and the PLL lock time. The OST and PLL lock times occur in parallel with the applicable $\overline{\text{SYSRST}}$ delay times.

The FSCM delay determines the time at which the FSCM begins to monitor the system clock source after the $\overline{\text{SYSRST}}$ signal is released.

TABLE 6-3: RESET DELAY TIMES FOR VARIOUS DEVICE RESETS

Reset Type	Clock Source	$\overline{\text{SYSRST}}$ Delay	System Clock Delay	Notes
POR(6)	EC	TPOR + TPWRT	—	**1, 2**
	FRC, FRCDIV	TPOR + TPWRT	TFRC	**1, 2, 3**
	LPRC	TPOR + TPWRT	TLPRC	**1, 2, 3**
	ECPLL	TPOR + TPWRT	TLOCK	**1, 2, 4**
	FRCPLL	TPOR + TPWRT	TFRC + TLOCK	**1, 2, 3, 4**
	XT, HS, SOSC	TPOR+ TPWRT	TOST	**1, 2, 5**
	XTPLL, HSPLL	TPOR + TPWRT	TOST + TLOCK	**1, 2, 4, 5**
BOR	EC	TPWRT	—	**2**
	FRC, FRCDIV	TPWRT	TFRC	**2, 3**
	LPRC	TPWRT	TLPRC	**2, 3**
	ECPLL	TPWRT	TLOCK	**2, 4**
	FRCPLL	TPWRT	TFRC + TLOCK	**2, 3, 4**
	XT, HS, SOSC	TPWRT	TOST	**2, 5**
	XTPLL, HSPLL	TPWRT	TFRC + TLOCK	**2, 3, 4**
All Others	Any Clock	—	—	**None**

Note 1: TPOR = Power-on Reset delay.

2: TPWRT = 64 ms nominal if the Power-up Timer is enabled; otherwise, it is zero.

3: TFRC and TLPRC = RC Oscillator start-up times.

4: TLOCK = PLL lock time.

5: TOST = Oscillator Start-up Timer (OST). A 10-bit counter waits 1024 oscillator periods before releasing oscillator clock to the system.

6: If Two-Speed Start-up is enabled, regardless of the Primary Oscillator selected, the device starts with FRC, and in such cases, FRC start-up time is valid.

Note: For detailed operating frequency and timing specifications, see **Section 29.0 “Electrical Characteristics”**.

 © 2009 Microchip Technology Inc.

6.3 Brown-out Reset (BOR)

The PIC24F04KA201 family devices implement a BOR circuit, which provides the user several configuration and power-saving options. The BOR is controlled by the <BORV1:BORV0> and (BOREN<1:0>) Configuration bits (FPOR<6:5,1:0>). There are a total of four BOR configurations, which are provided in Table 6.3.1.

The BOR threshold is set by the BORV<1:0> bits. If BOR is enabled (any values of BOREN<1:0>, except '00'), any drop of V_{DD} below the set threshold point will reset the device. The chip will remain in BOR until V_{DD} rises above threshold.

If the Power-up Timer is enabled, it will be invoked after V_{DD} rises above the threshold; it, then, will keep the chip in Reset for an additional time delay, T_{PWRT}, if V_{DD} drops below the threshold while the power-up timer is running. The chip goes back into a BOR and the Power-up Timer will be initialized. Once V_{DD} rises above the threshold, the Power-up Timer will execute the additional time delay.

BOR and the Power-up Timer are independently configured. Enabling the BOR Reset does not automatically enable the PWRT.

6.3.1 SOFTWARE ENABLED BOR

When BOREN<1:0> = 01, the BOR can be enabled or disabled by the user in software. This is done with the control bit, SBOREN (RCON<13>). Setting SBOREN enables the BOR to function as previously described. Clearing the SBOREN disables the BOR entirely. The SBOREN bit operates only in this mode; otherwise, it is read as '0'.

Placing BOR under software control gives the user the additional flexibility of tailoring the application to its environment without having to reprogram the device to change the BOR configuration. It also allows the user to tailor the incremental current that the BOR consumes. While the BOR current is typically very small, it may have some impact in low-power applications.

Note:	Even when the BOR is under software control, the BOR Reset voltage level is still set by the BORV1:BORV0 Configuration bits. It can not be changed in software.

6.3.2 DETECTING BOR

When BOR is enabled, the BOR bit (RCON<1>) is always reset to '1' on any BOR or POR event. This makes it difficult to determine if a BOR event has occurred just by reading the state of BOR alone. A more reliable method is to simultaneously check the state of both POR and BOR. This assumes that the POR and BOR bits are reset to '0' in the software immediately after any POR event. If the BOR bit is '1' while POR is '0', it can be reliably assumed that a BOR event has occurred.

Note:	Even when the device exits from Deep Sleep mode, both the POR and BOR are set.

6.3.3 DISABLING BOR IN SLEEP MODE

When BOREN<1:0> = 10, BOR remains under hardware control and operates as previously described. However, whenever the device enters Sleep mode, BOR is automatically disabled. When the device returns to any other operating mode, BOR is automatically re-enabled.

This mode allows for applications to recover from brown-out situations, while actively executing code, when the device requires BOR protection the most. At the same time, it saves additional power in Sleep mode by eliminating the small incremental BOR current.

6.3.4 DEEP SLEEP BOR (DSBOR)

Deep Sleep BOR is a very low-power BOR circuitry. Due to low current consumption, accuracy may vary. DSBOR occurs anywhere between 1.55V and 1.95V.

DSBOR is selected in configuration through the BORV<1:0> (FPOR<6:5>) bits = 00.

DSBOR re-arms the POR anywhere between 1.55V and 1.95V; however, below 1.55V, the POR is asserted.

6.3.5 POR AND LONG OSCILLATOR START-UP TIMES

The oscillator start-up circuitry and its associated delay timers are not linked to the device Reset delays that occur at power-up. Some crystal circuits (especially low-frequency crystals) will have a relatively long start-up time. Therefore, one or more of the following conditions is possible after $\overline{\text{SYSRST}}$ is released:

- The oscillator circuit has not begun to oscillate.
- The Oscillator Start-up Timer has not expired (if a crystal oscillator is used).
- The PLL has not achieved a lock (if PLL is used).

The device will not begin to execute code until a valid clock source has been released to the system. Therefore, the oscillator and PLL start-up delays must be considered when the Reset delay time must be known.

6.3.6 FAIL-SAFE CLOCK MONITOR (FSCM) AND DEVICE RESETS

If the FSCM is enabled, it will begin to monitor the system clock source when $\overline{\text{SYSRST}}$ is released. If a valid clock source is not available at this time, the device will automatically switch to the FRC Oscillator and the user can switch to the desired crystal oscillator in the Trap Service Routine (TSR).

6.4 Special Function Register Reset States

Most of the Special Function Registers (SFRs) associated with the PIC24F CPU and peripherals are reset to a particular value at a device Reset. The SFRs are grouped by their peripheral or CPU function and their Reset values are specified in each section of this manual.

The Reset value for each SFR does not depend on the type of Reset with the exception of four registers. The Reset value for the Reset Control register, RCON, will depend on the type of device Reset. The Reset value for the Oscillator Control register, OSCCON, will depend on the type of Reset and the programmed values of the FNOSC bits in Flash Configuration Word (FOSCSEL); see Table 6-2. The RCFGCAL and NVMCON registers are only affected by a POR.

6.5 Deep Sleep BOR (DSBOR)

Deep Sleep BOR is a very low-power BOR circuitry, used when the device is in Deep Sleep mode. Due to low-current consumption, accuracy may vary.

The DSBOR trip point is around 2.0V. DSBOR is enabled by configuring FDS <DSLPBOR> = 1. DSLPBOR will re-arm the POR to ensure the device will reset if V_{DD} drops below the POR threshold.

 © 2009 Microchip Technology Inc.

7.0 INTERRUPT CONTROLLER

Note:	This data sheet summarizes the features of this group of PIC24F devices. It is not intended to be a comprehensive reference source. For more information on the Interrupt Controller, refer to the *"PIC24F Family Reference Manual"*, **Section 8. "Interrupts"** (DS39707).

The PIC24F interrupt controller reduces the numerous peripheral interrupt request signals to a single interrupt request signal to the CPU. It has the following features:

- Up to eight processor exceptions and software traps
- Seven user-selectable priority levels
- Interrupt Vector Table (IVT) with up to 118 vectors
- Unique vector for each interrupt or exception source
- Fixed priority within a specified user priority level
- Fixed interrupt entry and return latencies

7.1 Interrupt Vector (IVT) Table

The IVT is displayed in Figure 7-1. The IVT resides in the program memory, starting at location 000004h. The IVT contains 126 vectors, consisting of eight non-maskable trap vectors, plus, up to 118 sources of interrupt. In general, each interrupt source has its own vector. Each interrupt vector contains a 24-bit wide address. The value programmed into each interrupt vector location is the starting address of the associated Interrupt Service Routine (ISR).

Interrupt vectors are prioritized in terms of their natural priority; this is linked to their position in the vector table. All other things being equal, lower addresses have a higher natural priority. For example, the interrupt associated with vector 0 will take priority over interrupts at any other vector address.

PIC24F04KA201 family devices implement non-maskable traps and unique interrupts; these are summarized in Table 7-1 and Table 7-2.

7.2 Reset Sequence

A device Reset is not a true exception because the interrupt controller is not involved in the Reset process. The PIC24F devices clear their registers in response to a Reset, which forces the Program Counter (PC) to zero. The microcontroller then begins program execution at location 000000h. The user programs a `GOTO` instruction at the Reset address, which redirects the program execution to the appropriate start-up routine.

Note:	Any unimplemented or unused vector locations in the IVT should be programmed with the address of a default interrupt handler routine that contains a `RESET` instruction.

FIGURE 7-1: PIC24F INTERRUPT VECTOR TABLE

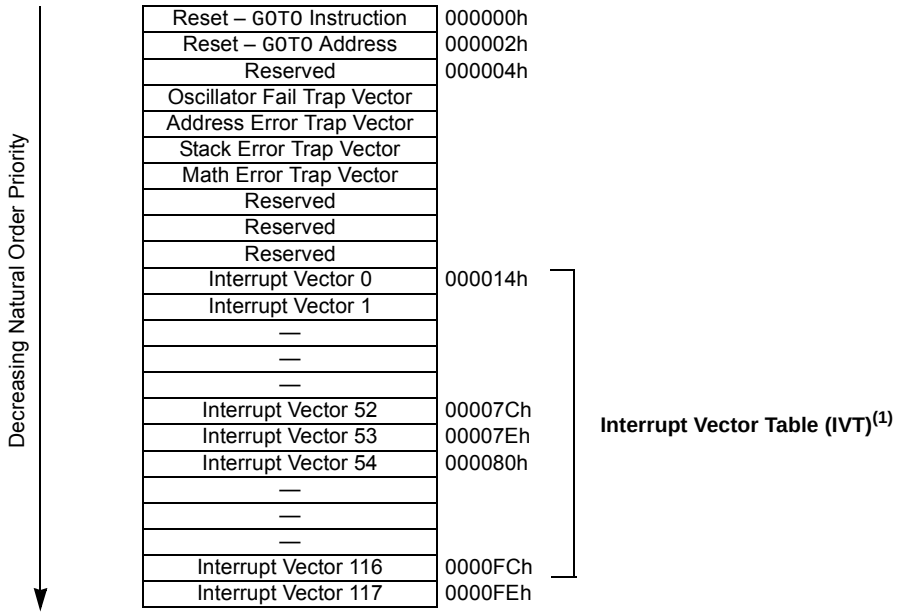

Note 1: See Table 7-2 for the interrupt vector list.

TABLE 7-1: TRAP VECTOR DETAILS

Vector Number	IVT Address	AIVT Address	Trap Source
0	000004h	000104h	Reserved
1	000006h	000106h	Oscillator Failure
2	000008h	000108h	Address Error
3	00000Ah	00010Ah	Stack Error
4	00000Ch	00010Ch	Math Error
5	00000Eh	00010Eh	Reserved
6	000010h	000110h	Reserved
7	000012h	000112h	Reserved

TABLE 7-2: IMPLEMENTED INTERRUPT VECTORS

Interrupt Source	Vector Number	IVT Address	AIVT Address	Interrupt Bit Locations		
				Flag	Enable	Priority
ADC1 Conversion Done	13	00002Eh	00012Eh	IFS0<13>	IEC0<13>	IPC3<6:4>
Comparator Event	18	000038h	000138h	IFS1<2>	IEC1<2>	IPC4<10:8>
CTMU	77	0000AEh	0001AEh	IFS4<13>	IEC4<13>	IPC19<6:4>
External Interrupt 0	0	000014h	000114h	IFS0<0>	IEC0<0>	IPC0<2:0>
External Interrupt 1	20	00003Ch	00013Ch	IFS1<4>	IEC1<4>	IPC5<2:0>
External Interrupt 2	29	00004Eh	00014Eh	IFS1<13>	IEC1<13>	IPC7<6:4>
I2C1 Master Event	17	000036h	000136h	IFS1<1>	IEC1<1>	IPC4<6:4>
I2C1 Slave Event	16	000034h	000134h	IFS1<0>	IEC1<0>	IPC4<2:0>
Input Capture1	1	000016h	000116h	IFS0<1>	IEC0<1>	IPC0<6:4>
Input Change Notification	19	00003Ah	00013Ah	IFS1<3>	IEC1<3>	IPC4<14:12>
HLVD High/Low-Voltage Detect	72	0000A4h	0001A4h	IFS4<8>	IEC4<8>	IPC17<2:0>
NVM – NVM Write Complete	15	000032h	000132h	IFS0<15>	IEC0<15>	IPC3<14:12>
Output Compare 1	2	000018h	000118h	IFS0<2>	IEC0<2>	IPC0<10:8>
SPI1 Error	9	000026h	000126h	IFS0<9>	IEC0<9>	IPC2<6:4>
SPI1 Event	10	000028h	000128h	IFS0<10>	IEC0<10>	IPC2<10:8>
Timer1	3	00001Ah	00011Ah	IFS0<3>	IEC0<3>	IPC0<14:12>
Timer2	7	000022h	000122h	IFS0<7>	IEC0<7>	IPC1<14:12>
Timer3	8	000024h	000124h	IFS0<8>	IEC0<8>	IPC2<2:0>
UART1 Error	65	000096h	000196h	IFS4<1>	IEC4<1>	IPC16<6:4>
UART1 Receiver	11	00002Ah	00012Ah	IFS0<11>	IEC0<11>	IPC2<14:12>
UART1 Transmitter	12	00002Ch	00012Ch	IFS0<12>	IEC0<12>	IPC3<2:0>

 © 2009 Microchip Technology Inc.

7.3 Interrupt Control and Status Registers

The PIC24F04KA201 family of devices implements a total of 23 registers for the interrupt controller:

- INTCON1
- INTCON2
- IFS0, IFS1, IFS3 and IFS4
- IEC0, IEC1, IEC3 and IEC4
- IPC0 through IPC5, IPC7 and IPC15 through IPC19
- INTTREG

Global interrupt control functions are controlled from INTCON1 and INTCON2. INTCON1 contains the Interrupt Nesting Disable (NSTDIS) bit, as well as the control and status flags for the processor trap sources. The INTCON2 register controls the external interrupt request signal behavior and the use of the AIV table.

The IFSx registers maintain all of the interrupt request flags. Each source of interrupt has a status bit, which is set by the respective peripherals, or external signal, and is cleared via software.

The IECx registers maintain all of the interrupt enable bits. These control bits are used to individually enable interrupts from the peripherals or external signals.

The IPCx registers are used to set the interrupt priority level for each source of interrupt. Each user interrupt source can be assigned to one of eight priority levels.

The INTTREG register contains the associated interrupt vector number and the new CPU interrupt priority level, which are latched into the Vector Number (VECNUM<6:0>) and the Interrupt Level (ILR<3:0>) bit fields in the INTTREG register. The new interrupt priority level is the priority of the pending interrupt.

The interrupt sources are assigned to the IFSx, IECx and IPCx registers in the same sequence listed in Table 7-2. For example, the INT0 (External Interrupt 0) is depicted as having a vector number and a natural order priority of 0. Thus, the INT0IF status bit is found in IFS0<0>, the INT0IE enable bit in IEC0<0> and the INT0IP<2:0> priority bits in the first position of IPC0 (IPC0<2:0>).

Although they are not specifically part of the interrupt control hardware, two of the CPU control registers contain bits that control interrupt functionality. The ALU STATUS register (SR) contains the IPL<2:0> bits (SR<7:5>). These indicate the current CPU interrupt priority level. The user may change the current CPU priority level by writing to the IPL bits.

The CORCON register contains the IPL3 bit, which together with IPL<2:0>, also indicates the current CPU priority level. IPL3 is a read-only bit so that the trap events cannot be masked by the user's software.

All interrupt registers are described in Register 7-1 through Register 7-18, in the following sections.

REGISTER 7-1: SR: ALU STATUS REGISTER

U-0	U-0	U-0	U-0	U-0	U-0	U-0	R-0, HSC
—	—	—	—	—	—	—	DC(1)
bit 15							bit 8

R/W-0, HSC	R/W-0, HSC	R/W-0, HSC	R-0, HSC	R/W-0, HSC	R/W-0, HSC	R/W-0, HSC	R/W-0, HSC
IPL2(2,3)	IPL1(2,3)	IPL0(2,3)	RA(1)	N(1)	OV(1)	Z(1)	C(1)
bit 7							bit 0

Legend:	HSC = Hardware Settable/Clearable bit		
R = Readable bit	W = Writable bit	U = Unimplemented bit, read as ‘0’	
-n = Value at POR	‘1’ = Bit is set	‘0’ = Bit is cleared	x = Bit is unknown

bit 15-9 **Unimplemented:** Read as ‘0’

bit 7-5 **IPL<2:0>:** CPU Interrupt Priority Level Status bits(2,3)
111 = CPU interrupt priority level is 7 (15); user interrupts disabled
110 = CPU interrupt priority level is 6 (14)
101 = CPU interrupt priority level is 5 (13)
100 = CPU interrupt priority level is 4 (12)
011 = CPU interrupt priority level is 3 (11)
010 = CPU interrupt priority level is 2 (10)
001 = CPU interrupt priority level is 1 (9)
000 = CPU interrupt priority level is 0 (8)

Note 1: See Register 3-1 for the description of these bits, which are not dedicated to interrupt control functions.
2: The IPL bits are concatenated with the IPL3 bit (CORCON<3>) to form the CPU interrupt priority level. The value in parentheses indicates the interrupt priority level if IPL3 = 1.
3: The IPL Status bits are read-only when NSTDIS (INTCON1<15>) = 1.

Note: Bit 8 and bits 4 through 0 are described in **Section 3.0 “CPU”**.

 © 2009 Microchip Technology Inc.

REGISTER 7-2: CORCON: CPU CONTROL REGISTER

U-0	U-0	U-0	U-0	U-0	U-0	U-0	U-0
—	—	—	—	—	—	—	—
bit 15							bit 8

U-0	U-0	U-0	U-0	R/C-0, HSC	R/W-0	U-0	U-0
—	—	—	—	IPL3(2)	PSV(1)	—	—
bit 7							bit 0

Legend:	C = Clearable bit	HSC = Hardware Settable/Clearable bit	
R = Readable bit	W = Writable bit	U = Unimplemented bit, read as ‘0’	
-n = Value at POR	‘1’ = Bit is set	‘0’ = Bit is cleared	x = Bit is unknown

bit 15-4 **Unimplemented:** Read as ‘0’

bit 3 **IPL3:** CPU Interrupt Priority Level Status bit(2)
1 = CPU interrupt priority level is greater than 7
0 = CPU interrupt priority level is 7 or less

bit 1-0 **Unimplemented:** Read as ‘0’

Note 1: See Register 3-1 for the description of this bit, which is not dedicated to interrupt control functions.
2: The IPL3 bit is concatenated with the IPL<2:0> bits (SR<7:5>) to form the CPU interrupt priority level.

Note: Bit 2 is described in **Section 3.0 “CPU”**.

REGISTER 7-3: INTCON1: INTERRUPT CONTROL REGISTER 1

R/W-0	U-0	U-0	U-0	U-0	U-0	U-0	U-0
NSTDIS	—	—	—	—	—	—	—
bit 15							bit 8

U-0	U-0	U-0	R/W-0, HS	R/W-0, HS	R/W-0, HS	R/W-0, HS	U-0
—	—	—	MATHERR	ADDRERR	STKERR	OSCFAIL	—
bit 7							bit 0

Legend:	HS = Hardware Settable bit		
R = Readable bit	W = Writable bit	U = Unimplemented bit, read as ‘0’	
-n = Value at POR	‘1’ = Bit is set	‘0’ = Bit is cleared	x = Bit is unknown

bit 15 **NSTDIS:** Interrupt Nesting Disable bit
1 = Interrupt nesting is disabled
0 = Interrupt nesting is enabled

bit 14-5 **Unimplemented:** Read as ‘0’

bit 4 **MATHERR:** Arithmetic Error Trap Status bit
1 = Overflow trap has occurred
0 = Overflow trap has not occurred

bit 3 **ADDRERR:** Address Error Trap Status bit
1 = Address error trap has occurred
0 = Address error trap has not occurred

bit 2 **STKERR:** Stack Error Trap Status bit
1 = Stack error trap has occurred
0 = Stack error trap has not occurred

bit 1 **OSCFAIL:** Oscillator Failure Trap Status bit
1 = Oscillator failure trap has occurred
0 = Oscillator failure trap has not occurred

bit 0 **Unimplemented:** Read as ‘0’

 © 2009 Microchip Technology Inc.

REGISTER 7-4: INTCON2: INTERRUPT CONTROL REGISTER2

R/W-0	R-0, HSC	U-0	U-0	U-0	U-0	U-0	U-0
ALTIVT	DISI	—	—	—	—	—	—
bit 15							bit 8

U-0	U-0	U-0	U-0	U-0	R/W-0	R/W-0	R/W-0
—	—	—	—	—	INT2EP	INT1EP	INT0EP
bit 7							bit 0

Legend:	HSC = Hardware Settable/Clearable bit		
R = Readable bit	W = Writable bit	U = Unimplemented bit, read as ‘0’	
-n = Value at POR	‘1’ = Bit is set	‘0’ = Bit is cleared	x = Bit is unknown

bit 15 **ALTIVT:** Enable Alternate Interrupt Vector Table bit
`1` = Use Alternate Interrupt Vector Table
`0` = Use standard (default) vector table

bit 14 **DISI:** `DISI` Instruction Status bit
`1` = `DISI` instruction is active
`0` = `DISI` instruction is not active

bit 13-3 **Unimplemented:** Read as ‘`0`’

bit 2 **INT2EP:** External Interrupt 2 Edge Detect Polarity Select bit
`1` = Interrupt on negative edge
`0` = Interrupt on positive edge

bit 1 **INT1EP:** External Interrupt 1 Edge Detect Polarity Select bit
`1` = Interrupt on negative edge
`0` = Interrupt on positive edge

bit 0 **INT0EP:** External Interrupt 0 Edge Detect Polarity Select bit
`1` = Interrupt on negative edge
`0` = Interrupt on positive edge

REGISTER 7-5: IFS0: INTERRUPT FLAG STATUS REGISTER 0

R/W-0, HS	U-0	R/W-0, HS	R/W-0, HS	R/W-0, HS	R/W-0, HS	R/W-0, HS	R/W-0, HS
NVMIF	—	AD1IF	U1TXIF	U1RXIF	SPI1IF	SPF1IF	T3IF
bit 15							bit 8

R/W-0, HS	U-0	U-0	U-0	R/W-0, HS	R/W-0, HS	R/W-0, HS	R/W-0, HS
T2IF	—	—	—	T1IF	OC1IF	IC1IF	INT0IF
bit 7							bit 0

Legend:	HS = Hardware Settable bit		
R = Readable bit	W = Writable bit	U = Unimplemented bit, read as ‘0’	
-n = Value at POR	‘1’ = Bit is set	‘0’ = Bit is cleared	x = Bit is unknown

bit 15 **NVMIF:** NVM Interrupt Flag Status bit
`1` = Interrupt request has occurred
`0` = Interrupt request has not occurred

bit 14 **Unimplemented:** Read as ‘`0`’

bit 13 **AD1IF:** A/D Conversion Complete Interrupt Flag Status bit
`1` = Interrupt request has occurred
`0` = Interrupt request has not occurred

bit 12 **U1TXIF:** UART1 Transmitter Interrupt Flag Status bit
`1` = Interrupt request has occurred
`0` = Interrupt request has not occurred

bit 11 **U1RXIF:** UART1 Receiver Interrupt Flag Status bit
`1` = Interrupt request has occurred
`0` = Interrupt request has not occurred

bit 10 **SPI1IF:** SPI1 Event Interrupt Flag Status bit
`1` = Interrupt request has occurred
`0` = Interrupt request has not occurred

bit 9 **SPF1IF:** SPI1 Fault Interrupt Flag Status bit
`1` = Interrupt request has occurred
`0` = Interrupt request has not occurred

bit 8 **T3IF:** Timer3 Interrupt Flag Status bit
`1` = Interrupt request has occurred
`0` = Interrupt request has not occurred

bit 7 **T2IF:** Timer2 Interrupt Flag Status bit
`1` = Interrupt request has occurred
`0` = Interrupt request has not occurred

bit 6-4 **Unimplemented:** Read as ‘`0`’

bit 3 **T1IF:** Timer1 Interrupt Flag Status bit
`1` = Interrupt request has occurred
`0` = Interrupt request has not occurred

bit 2 **OC1IF:** Output Compare Channel 1 Interrupt Flag Status bit
`1` = Interrupt request has occurred
`0` = Interrupt request has not occurred

bit 1 **IC1IF:** Input Capture Channel 1 Interrupt Flag Status bit
`1` = Interrupt request has occurred
`0` = Interrupt request has not occurred

bit 0 **INT0IF:** External Interrupt 0 Flag Status bit
`1` = Interrupt request has occurred
`0` = Interrupt request has not occurred

 © 2009 Microchip Technology Inc.

REGISTER 7-6: IFS1: INTERRUPT FLAG STATUS REGISTER 1

U-0	U-0	R/W-0, HS	U-0	U-0	U-0	U-0	U-0
—	—	INT2IF	—	—	—	—	—
bit 15							bit 8

U-0	U-0	U-0	R/W-0, HS	R/W-0, HS	R/W-0, HS	R/W-0	R/W-0
—	—	—	INT1IF	CNIF	CMIF	MI2C1IF	SI2C1IF
bit 7							bit 0

Legend:	HS = Hardware Settable bit		
R = Readable bit	W = Writable bit	U = Unimplemented bit, read as ‘0’	
-n = Value at POR	‘1’ = Bit is set	‘0’ = Bit is cleared	x = Bit is unknown

bit 15-14 **Unimplemented:** Read as ‘0’

bit 13 **INT2IF:** External Interrupt 2 Flag Status bit
1 = Interrupt request has occurred
0 = Interrupt request has not occurred

bit 12-5 **Unimplemented:** Read as ‘0’

bit 4 **INT1IF:** External Interrupt 1 Flag Status bit
1 = Interrupt request has occurred
0 = Interrupt request has not occurred

bit 3 **CNIF:** Input Change Notification Interrupt Flag Status bit
1 = Interrupt request has occurred
0 = Interrupt request has not occurred

bit 2 **CMIF:** Comparator Interrupt Flag Status bit
1 = Interrupt request has occurred
0 = Interrupt request has not occurred

bit 1 **MI2C1IF:** Master I2C1 Event Interrupt Flag Status bit
1 = Interrupt request has occurred
0 = Interrupt request has not occurred

bit 0 **SI2C1IF:** Slave I2C1 Event Interrupt Flag Status bit
1 = Interrupt request has occurred
0 = Interrupt request has not occurred

REGISTER 7-7: IFS4: INTERRUPT FLAG STATUS REGISTER 4

U-0	U-0	R/W-0, HS	U-0	U-0	U-0	U-0	R/W-0, HS
—	—	CTMUIF	—	—	—	—	HLVDIF
bit 15							bit 8

U-0	U-0	U-0	U-0	U-0	U-0	R/W-0, HS	U-0
—	—	—	—	—	—	U1ERIF	—
bit 7							bit 0

Legend:	HS = Hardware Settable bit		
R = Readable bit	W = Writable bit	U = Unimplemented bit, read as ‘0’	
-n = Value at POR	‘1’ = Bit is set	‘0’ = Bit is cleared	x = Bit is unknown

bit 15-14 **Unimplemented:** Read as ‘0’

bit 13 **CTMUIF:** CTMU Interrupt Flag Status bit
1 = Interrupt request has occurred
0 = Interrupt request has not occurred

bit 12-9 **Unimplemented:** Read as ‘0’

bit 8 **HLVDIF:** High/Low-Voltage Detect Interrupt Flag Status bit
1 = Interrupt request has occurred
0 = Interrupt request has not occurred

bit 7-2 **Unimplemented:** Read as ‘0’

bit 1 **U1ERIF:** UART1 Error Interrupt Flag Status bit
1 = Interrupt request has occurred
0 = Interrupt request has not occurred

bit 0 **Unimplemented:** Read as ‘0’

 © 2009 Microchip Technology Inc.

REGISTER 7-8: IEC0: INTERRUPT ENABLE CONTROL REGISTER 0

R/W-0	U-0	R/W-0	R/W-0	R/W-0	R/W-0	R/W-0	R/W-0
NVMIE	—	AD1IE	U1TXIE	U1RXIE	SPI1IE	SPF1IE	T3IE
bit 15							bit 8

R/W-0	U-0	U-0	U-0	R/W-0	R/W-0	R/W-0	R/W-0
T2IE	—	—	—	T1IE	OC1IE	IC1IE	INT0IE
bit 7							bit 0

Legend:			
R = Readable bit	W = Writable bit	U = Unimplemented bit, read as ‘0’	
-n = Value at POR	‘1’ = Bit is set	‘0’ = Bit is cleared	x = Bit is unknown

bit 15 **NVMIE:** NVM Interrupt Enable bit
1 = Interrupt request enabled
0 = Interrupt request not enabled

bit 14 **Unimplemented:** Read as ‘0’

bit 13 **AD1IE:** A/D Conversion Complete Interrupt Enable bit
1 = Interrupt request enabled
0 = Interrupt request not enabled

bit 12 **U1TXIE:** UART1 Transmitter Interrupt Enable bit
1 = Interrupt request enabled
0 = Interrupt request not enabled

bit 11 **U1RXIE:** UART1 Receiver Interrupt Enable bit
1 = Interrupt request enabled
0 = Interrupt request not enabled

bit 10 **SPI1IE:** SPI1 Transfer Complete Interrupt Enable bit
1 = Interrupt request enabled
0 = Interrupt request not enabled

bit 9 **SPF1IE:** SPI1 Fault Interrupt Enable bit
1 = Interrupt request enabled
0 = Interrupt request not enabled

bit 8 **T3IE:** Timer3 Interrupt Enable bit
1 = Interrupt request enabled
0 = Interrupt request not enabled

bit 7 **T2IE:** Timer2 Interrupt Enable bit
1 = Interrupt request enabled
0 = Interrupt request not enabled

bit 6-4 **Unimplemented:** Read as ‘0’

bit 3 **T1IE:** Timer1 Interrupt Enable bit
1 = Interrupt request enabled
0 = Interrupt request not enabled

bit 2 **OC1IE:** Output Compare Channel 1 Interrupt Enable bit
1 = Interrupt request enabled
0 = Interrupt request not enabled

bit 1 **IC1IE:** Input Capture Channel 1 Interrupt Enable bit
1 = Interrupt request enabled
0 = Interrupt request not enabled

bit 0 **INT0IE:** External Interrupt 0 Enable bit
1 = Interrupt request enabled
0 = Interrupt request not enabled

REGISTER 7-9: IEC1: INTERRUPT ENABLE CONTROL REGISTER 1

U-0	U-0	R/W-0	U-0	U-0	U-0	U-0	U-0
—	—	INT2IE	—	—	—	—	—
bit 15							bit 8

U-0	U-0	U-0	R/W-0	R/W-0	R/W-0	R/W-0	R/W-0
—	—	—	INT1IE	CNIE	CMIE	MI2C1IE	SI2C1IE
bit 7							bit 0

Legend:			
R = Readable bit	W = Writable bit	U = Unimplemented bit, read as ‘0’	
-n = Value at POR	‘1’ = Bit is set	‘0’ = Bit is cleared	x = Bit is unknown

bit 15-14 **Unimplemented:** Read as ‘0’

bit 13 **INT2IE:** External Interrupt 2 Enable bit
1 = Interrupt request enabled
0 = Interrupt request not enabled

bit 12-5 **Unimplemented:** Read as ‘0’

bit 4 **INT1IE:** External Interrupt 1 Enable bit
1 = Interrupt request enabled
0 = Interrupt request not enabled

bit 3 **CNIE:** Input Change Notification Interrupt Enable bit
1 = Interrupt request enabled
0 = Interrupt request not enabled

bit 2 **CMIE:** Comparator Interrupt Enable bit
1 = Interrupt request enabled
0 = Interrupt request not enabled

bit 1 **MI2C1IE:** Master I2C1 Event Interrupt Enable Status bit
1 = Interrupt request has occurred
0 = Interrupt request has not occurred

bit 0 **SI2C1IE:** Slave I2C1 Event Interrupt Enable Status bit
1 = Interrupt request has occurred
0 = Interrupt request has not occurred

 © 2009 Microchip Technology Inc.

REGISTER 7-10: IEC4: INTERRUPT ENABLE CONTROL REGISTER 4

U-0	U-0	R/W-0	U-0	U-0	U-0	U-0	R/W-0
—	—	CTMUIE	—	—	—	—	HLVDIE
bit 15							bit 8

U-0	U-0	U-0	U-0	U-0	U-0	R/W-0	U-0
—	—	—	—	—	—	U1ERIE	—
bit 7							bit 0

Legend:			
R = Readable bit	W = Writable bit	U = Unimplemented bit, read as ‘0’	
-n = Value at POR	‘1’ = Bit is set	‘0’ = Bit is cleared	x = Bit is unknown

bit 15-14 **Unimplemented:** Read as ‘0’

bit 13 **CTMUIE:** CTMU Interrupt Enable bit
1 = Interrupt request enabled
0 = Interrupt request not enabled

bit 12-9 **Unimplemented:** Read as ‘0’

bit 8 **HLVDIE:** High/Low-Voltage Detect Interrupt Enable bit
1 = Interrupt request enabled
0 = Interrupt request not enabled

bit 7-2 **Unimplemented:** Read as ‘0’

bit 1 **U1ERIE:** UART1 Error Interrupt Enable bit
1 = Interrupt request enabled
0 = Interrupt request not enabled

bit 0 **Unimplemented:** Read as ‘0’

REGISTER 7-11: IPC0: INTERRUPT PRIORITY CONTROL REGISTER 0

U-0	R/W-1	R/W-0	R/W-0	U-0	R/W-1	R/W-0	R/W-0
—	T1IP2	T1IP1	T1IP0	—	OC1IP2	OC1IP1	OC1IP0
bit 15							bit 8

U-0	R/W-1	R/W-0	R/W-0	U-0	R/W-1	R/W-0	R/W-0
—	IC1IP2	IC1IP1	IC1IP0	—	INT0IP2	INT0IP1	INT0IP0
bit 7							bit 0

Legend:			
R = Readable bit	W = Writable bit	U = Unimplemented bit, read as ‘0’	
-n = Value at POR	‘1’ = Bit is set	‘0’ = Bit is cleared	x = Bit is unknown

bit 15 **Unimplemented:** Read as ‘0’

bit 14-12 **T1IP<2:0>:** Timer1 Interrupt Priority bits
111 = Interrupt is priority 7 (highest priority interrupt)
•
•
•
001 = Interrupt is priority 1
000 = Interrupt source is disabled

bit 11 **Unimplemented:** Read as ‘0’

bit 10-8 **OC1IP<2:0>:** Output Compare Channel 1 Interrupt Priority bits
111 = Interrupt is priority 7 (highest priority interrupt)
•
•
•
001 = Interrupt is priority 1
000 = Interrupt source is disabled

bit 7 **Unimplemented:** Read as ‘0’

bit 6-4 **IC1IP<2:0>:** Input Capture Channel 1 Interrupt Priority bits
111 = Interrupt is priority 7 (highest priority interrupt)
•
•
•
001 = Interrupt is priority 1
000 = Interrupt source is disabled

bit 3 **Unimplemented:** Read as ‘0’

bit 2-0 **INT0IP<2:0>:** External Interrupt 0 Priority bits
111 = Interrupt is priority 7 (highest priority interrupt)
•
•
•
001 = Interrupt is priority 1
000 = Interrupt source is disabled

 © 2009 Microchip Technology Inc.

REGISTER 7-12: IPC1: INTERRUPT PRIORITY CONTROL REGISTER 1

U-0	R/W-1	R/W-0	R/W-0	U-0	U-0	U-0	U-0
—	T2IP2	T2IP1	T2IP0	—	—	—	—
bit 15							bit 8

U-0	U-0	U-0	U-0	U-0	U-0	U-0	U-0
—	—	—	—	—	—	—	—
bit 7							bit 0

Legend:			
R = Readable bit	W = Writable bit	U = Unimplemented bit, read as ‘0’	
-n = Value at POR	‘1’ = Bit is set	‘0’ = Bit is cleared	x = Bit is unknown

bit 15 **Unimplemented:** Read as ‘0’

bit 14-12 **T2IP<2:0>:** Timer2 Interrupt Priority bits
111 = Interrupt is priority 7 (highest priority interrupt)
•
•
•
001 = Interrupt is priority 1
000 = Interrupt source is disabled

bit 11-0 **Unimplemented:** Read as ‘0’

REGISTER 7-13: IPC2: INTERRUPT PRIORITY CONTROL REGISTER 2

U-0	R/W-1	R/W-0	R/W-0	U-0	R/W-1	R/W-0	R/W-0
—	U1RXIP2	U1RXIP1	U1RXIP0	—	SPI1IP2	SPI1IP1	SPI1IP0
bit 15							bit 8

U-0	R/W-1	R/W-0	R/W-0	U-0	R/W-1	R/W-0	R/W-0
—	SPF1IP2	SPF1IP1	SPF1IP0	—	T3IP2	T3IP1	T3IP0
bit 7							bit 0

Legend:			
R = Readable bit	W = Writable bit	U = Unimplemented bit, read as ‘0’	
-n = Value at POR	‘1’ = Bit is set	‘0’ = Bit is cleared	x = Bit is unknown

bit 15 **Unimplemented:** Read as ‘0’

bit 14-12 **U1RXIP<2:0>:** UART1 Receiver Interrupt Priority bits
111 = Interrupt is priority 7 (highest priority interrupt)
•
•
•
001 = Interrupt is priority 1
000 = Interrupt source is disabled

bit 11 **Unimplemented:** Read as ‘0’

bit 10-8 **SPI1IP<2:0>:** SPI1 Event Interrupt Priority bits
111 = Interrupt is priority 7 (highest priority interrupt)
•
•
•
001 = Interrupt is priority 1
000 = Interrupt source is disabled

bit 7 **Unimplemented:** Read as ‘0’

bit 6-4 **SPF1IP<2:0>:** SPI1 Fault Interrupt Priority bits
111 = Interrupt is priority 7 (highest priority interrupt)
•
•
•
001 = Interrupt is priority 1
000 = Interrupt source is disabled

bit 3 **Unimplemented:** Read as ‘0’

bit 2-0 **T3IP<2:0>:** Timer3 Interrupt Priority bits
111 = Interrupt is priority 7 (highest priority interrupt)
•
•
•
001 = Interrupt is priority 1
000 = Interrupt source is disabled

 © 2009 Microchip Technology Inc.

REGISTER 7-14: IPC3: INTERRUPT PRIORITY CONTROL REGISTER 3

U-0	R/W-1	R/W-0	R/W-0	U-0	U-0	U-0	U-0
—	NVMIP2	NVMIP1	NVMIP0	—	—	—	—
bit 15							bit 8

U-0	R/W-1	R/W-0	R/W-0	U-0	R/W-1	R/W-0	R/W-0
—	AD1IP2	AD1IP1	AD1IP0	—	U1TXIP2	U1TXIP1	U1TXIP0
bit 7							bit 0

Legend:			
R = Readable bit	W = Writable bit	U = Unimplemented bit, read as ‘0’	
-n = Value at POR	‘1’ = Bit is set	‘0’ = Bit is cleared	x = Bit is unknown

bit 15 **Unimplemented:** Read as ‘0’

bit 14-12 **NVMIP<2:0>:** NVM Interrupt Priority bits
111 = Interrupt is priority 7 (highest priority interrupt)
•
•
•
001 = Interrupt is priority 1
000 = Interrupt source is disabled

bit 11-7 **Unimplemented:** Read as ‘0’

bit 6-4 **AD1IP<2:0>:** A/D Conversion Complete Interrupt Priority bits
111 = Interrupt is priority 7 (highest priority interrupt)
•
•
•
001 = Interrupt is priority 1
000 = Interrupt source is disabled

bit 3 **Unimplemented:** Read as ‘0’

bit 2-0 **U1TXIP<2:0>:** UART1 Transmitter Interrupt Priority bits
111 = Interrupt is priority 7 (highest priority interrupt)
•
•
•
001 = Interrupt is priority 1
000 = Interrupt source is disabled

REGISTER 7-15: IPC4: INTERRUPT PRIORITY CONTROL REGISTER 4

U-0	R/W-1	R/W-0	R/W-0	U-0	R/W-1	R/W-0	R/W-0
—	CNIP2	CNIP1	CNIP0	—	CMIP2	CMIP1	CMIP0
bit 15							bit 8

U-0	R/W-1	R/W-0	R/W-0	U-0	R/W-1	R/W-0	R/W-0
—	MI2C1P2	MI2C1P1	MI2C1P0	—	SI2C1P2	SI2C1P1	SI2C1P0
bit 7							bit 0

Legend:			
R = Readable bit	W = Writable bit	U = Unimplemented bit, read as ‘0’	
-n = Value at POR	‘1’ = Bit is set	‘0’ = Bit is cleared	x = Bit is unknown

bit 15 **Unimplemented:** Read as ‘0’

bit 14-12 **CNIP<2:0>:** Input Change Notification Interrupt Priority bits
111 = Interrupt is priority 7 (highest priority interrupt)
•
•
•
001 = Interrupt is priority 1
000 = Interrupt source is disabled

bit 11 **Unimplemented:** Read as ‘0’

bit 10-8 **CMIP<2:0>:** Comparator Interrupt Priority bits
111 = Interrupt is priority 7 (highest priority interrupt)
•
•
•
001 = Interrupt is priority 1
000 = Interrupt source is disabled

bit 7 **Unimplemented:** Read as ‘0’

bit 6-4 **MI2C1P<2:0>:** Master I2C1 Event Interrupt Priority bits
111 = Interrupt is priority 7 (highest priority interrupt)
•
•
•
001 = Interrupt is priority 1
000 = Interrupt source is disabled

bit 3 **Unimplemented:** Read as ‘0’

bit 2-0 **SI2C1P<2:0>:** Slave I2C1 Event Interrupt Priority bits
111 = Interrupt is priority 7 (highest priority interrupt)
•
•
•
001 = Interrupt is priority 1
000 = Interrupt source is disabled

 © 2009 Microchip Technology Inc.

REGISTER 7-16: IPC5: INTERRUPT PRIORITY CONTROL REGISTER 5

U-0	U-0	U-0	U-0	U-0	U-0	U-0	U-0
—	—	—	—	—	—	—	—
bit 15							bit 8

U-0	U-0	U-0	U-0	U-0	R/W-1	R/W-0	R/W-0
—	—	—	—	—	INT1IP2	INT1IP1	INT1IP0
bit 7							bit 0

Legend:			
R = Readable bit	W = Writable bit	U = Unimplemented bit, read as ‘0’	
-n = Value at POR	‘1’ = Bit is set	‘0’ = Bit is cleared	x = Bit is unknown

bit 15-3 **Unimplemented:** Read as ‘0’

bit 2-0 **INT1IP<2:0>:** External Interrupt 1 Priority bits

111 = Interrupt is priority 7 (highest priority interrupt)

•

•

•

001 = Interrupt is priority 1

000 = Interrupt source is disabled

REGISTER 7-17: IPC7: INTERRUPT PRIORITY CONTROL REGISTER 7

U-0	U-0	U-0	U-0	U-0	U-0	U-0	U-0
—	—	—	—	—	—	—	—
bit 15							bit 8

U-0	R/W-1	R/W-0	R/W-0	U-0	U-0	U-0	U-0
—	INT2IP2	INT2IP1	INT2IP0	—	—	—	—
bit 7							bit 0

Legend:			
R = Readable bit	W = Writable bit	U = Unimplemented bit, read as ‘0’	
-n = Value at POR	‘1’ = Bit is set	‘0’ = Bit is cleared	x = Bit is unknown

bit 15-7 **Unimplemented:** Read as ‘0’

bit 6-4 **INT2IP<2:0>:** External Interrupt 2 Priority bits

111 = Interrupt is priority 7 (highest priority interrupt)

•

•

•

001 = Interrupt is priority 1

000 = Interrupt source is disabled

bit 3-0 **Unimplemented:** Read as ‘0’

 © 2009 Microchip Technology Inc.

REGISTER 7-18: IPC16: INTERRUPT PRIORITY CONTROL REGISTER 16

U-0	U-0	U-0	U-0	U-0	U-0	U-0	U-0
—	—	—	—	—	—	—	—
bit 15							bit 8

U-0	R/W-1	R/W-0	R/W-0	U-0	U-0	U-0	U-0
—	U1ERIP2	U1ERIP1	U1ERIP0	—	—	—	—
bit 7							bit 0

Legend:			
R = Readable bit	W = Writable bit	U = Unimplemented bit, read as ‘0’	
-n = Value at POR	‘1’ = Bit is set	‘0’ = Bit is cleared	x = Bit is unknown

bit 15-7 **Unimplemented:** Read as ‘0’

bit 6-4 **U1ERIP<2:0>:** UART1 Error Interrupt Priority bits

111 = Interrupt is priority 7 (highest priority interrupt)

•

•

•

001 = Interrupt is priority 1

000 = Interrupt source is disabled

bit 3-0 **Unimplemented:** Read as ‘0’

REGISTER 7-19: IPC18: INTERRUPT PRIORITY CONTROL REGISTER 18

U-0	U-0	U-0	U-0	U-0	U-0	U-0	U-0
—	—	—	—	—	—	—	—
bit 15							bit 8

U-0	U-0	U-0	U-0	U-0	R/W-1	R/W-0	R/W-0
—	—	—	—	—	HLVDIP2	HLVDIP1	HLVDIP0
bit 7							bit 0

Legend:			
R = Readable bit	W = Writable bit	U = Unimplemented bit, read as ‘0’	
-n = Value at POR	‘1’ = Bit is set	‘0’ = Bit is cleared	x = Bit is unknown

bit 15-3 **Unimplemented:** Read as ‘0’

bit 2-0 **HLVDIP<2:0>:** High/Low-Voltage Detect Interrupt Priority bits
111 = Interrupt is priority 7 (highest priority interrupt)
•
•
•
001 = Interrupt is priority 1
000 = Interrupt source is disabled

REGISTER 7-20: IPC19: INTERRUPT PRIORITY CONTROL REGISTER 19

U-0	U-0	U-0	U-0	U-0	U-0	U-0	U-0
—	—	—	—	—	—	—	—
bit 15							bit 8

U-0	R/W-1	R/W-0	R/W-0	U-0	U-0	U-0	U-0
—	CTMUIP2	CTMUIP1	CTMUIP0	—	—	—	—
bit 7							bit 0

Legend:			
R = Readable bit	W = Writable bit	U = Unimplemented bit, read as ‘0’	
-n = Value at POR	‘1’ = Bit is set	‘0’ = Bit is cleared	x = Bit is unknown

bit 15-7 **Unimplemented:** Read as ‘0’

bit 6-4 **CTMUIP<2:0>:** CTMU Interrupt Priority bits
111 = Interrupt is priority 7 (highest priority interrupt)
•
•
•
001 = Interrupt is priority 1
000 = Interrupt source is disabled

bit 3-0 **Unimplemented:** Read as ‘0’

 © 2009 Microchip Technology Inc.

REGISTER 7-21: INTTREG: INTERRUPT CONTROL AND STATUS REGISTER

R-0	U-0	R/W-0	U-0	R-0	R-0	R-0	R-0
CPUIRQ	—	VHOLD	—	ILR<3:0>			
bit 15							bit 8

U-0	R-0	R-0	R-0	R-0	R-0	R-0	R-0
—	VECNUM<6:0>						
bit 7							bit 0

Legend:			
R = Readable bit	W = Writable bit	U = Unimplemented bit, read as ‘0’	
-n = Value at POR	‘1’ = Bit is set	‘0’ = Bit is cleared	x = Bit is unknown

bit 15 **CPUIRQ:** Interrupt Request from Interrupt Controller CPU bit
- 1 = An interrupt request has occurred but has not yet been Acknowledged by the CPU (this will happen when the CPU priority is higher than the interrupt priority)
- 0 = No interrupt request is left unacknowledged

bit 14 **Unimplemented:** Read as ‘0’

bit 13 **VHOLD:** Allows Vector Number Capture and Changes what Interrupt is Stored in VECNUM bit
- 1 = VECNUM will contain the value of the highest priority pending interrupt, instead of the current interrupt
- 0 = VECNUM will contain the value of the last Acknowledged interrupt (last interrupt that has occurred with higher priority than the CPU, even if other interrupts are pending)

bit 12 **Unimplemented:** Read as ‘0’

bit 11-8 **ILR<3:0>:** New CPU Interrupt Priority Level bits
- 1111 = CPU Interrupt Priority Level is 15
- •
- •
- •
- 0001 = CPU Interrupt Priority Level is 1
- 0000 = CPU Interrupt Priority Level is 0

bit 7 **Unimplemented:** Read as ‘0’

bit 6-0 **VECNUM<6:0>:** Vector Number of Pending Interrupt bits
- 0111111 = Interrupt Vector pending is number 135
- •
- •
- •
- 0000001 = Interrupt Vector pending is number 9
- 0000000 = Interrupt Vector pending is number 8

7.4 Interrupt Setup Procedures

7.4.1 INITIALIZATION

To configure an interrupt source:

1. Set the NSTDIS Control bit (INTCON1<15>) if nested interrupts are not desired.
2. Select the user-assigned priority level for the interrupt source by writing the control bits in the appropriate IPCx register. The priority level will depend on the specific application and type of interrupt source. If multiple priority levels are not desired, the IPCx register control bits for all enabled interrupt sources may be programmed to the same non-zero value.

Note:	At a device Reset, the IPCx registers are initialized, such that all user interrupt sources are assigned to priority level 4.

3. Clear the interrupt flag status bit associated with the peripheral in the associated IFSx register.
4. Enable the interrupt source by setting the interrupt enable control bit associated with the source in the appropriate IECx register.

7.4.2 INTERRUPT SERVICE ROUTINE

The method that is used to declare an ISR and initialize the IVT with the correct vector address depends on the programming language (i.e., C or assembler) and the language development toolsuite that is used to develop the application. In general, the user must clear the interrupt flag in the appropriate IFSx register for the source of the interrupt that the ISR handles. Otherwise, the ISR will be re-entered immediately after exiting the routine. If the ISR is coded in assembly language, it must be terminated using a `RETFIE` instruction to unstack the saved PC value, SRL value and old CPU priority level.

7.4.3 TRAP SERVICE ROUTINE (TSR)

A Trap Service Routine (TSR) is coded like an ISR, except that the appropriate trap status flag in the INTCON1 register must be cleared to avoid re-entry into the TSR.

7.4.4 INTERRUPT DISABLE

All user interrupts can be disabled using the following procedure:

1. Push the current SR value onto the software stack using the `PUSH` instruction.
2. Force the CPU to priority level 7 by inclusive ORing the value OEh with SRL.

To enable user interrupts, the `POP` instruction may be used to restore the previous SR value.

Only user interrupts with a priority level of 7 or less can be disabled. Trap sources (level 8-15) cannot be disabled.

The `DISI` instruction provides a convenient way to disable interrupts of priority levels 1-6 for a fixed period. Level 7 interrupt sources are not disabled by the `DISI` instruction.

 © 2009 Microchip Technology Inc.

8.0 OSCILLATOR CONFIGURATION

Note:	This data sheet summarizes the features of this group of PIC24F devices. It is not intended to be a comprehensive reference source. For more information on Oscillator Configuration, refer to the *"PIC24F Family Reference Manual"*, **Section 38. "Oscillator with 500 kHz Low-Power FRC"** (DS39726).

The oscillator system for the PIC24F04KA201 family of devices has the following features:

- A total of five external and internal oscillator options as clock sources, providing 11 different clock modes.
- On-chip 4x Phase Locked Loop (PLL) to boost internal operating frequency on select internal and external oscillator sources.
- Software-controllable switching between various clock sources.
- Software-controllable postscaler for selective clocking of CPU for system power savings.
- System frequency range declaration bits for EC mode. When using an external clock source, the current consumption is reduced by setting the declaration bits to the expected frequency range.
- A Fail-Safe Clock Monitor (FSCM) that detects clock failure and permits safe application recovery or shutdown.

Figure 8-1 provides a simplified diagram of the oscillator system.

FIGURE 8-1: PIC24F04KA201 FAMILY CLOCK DIAGRAM

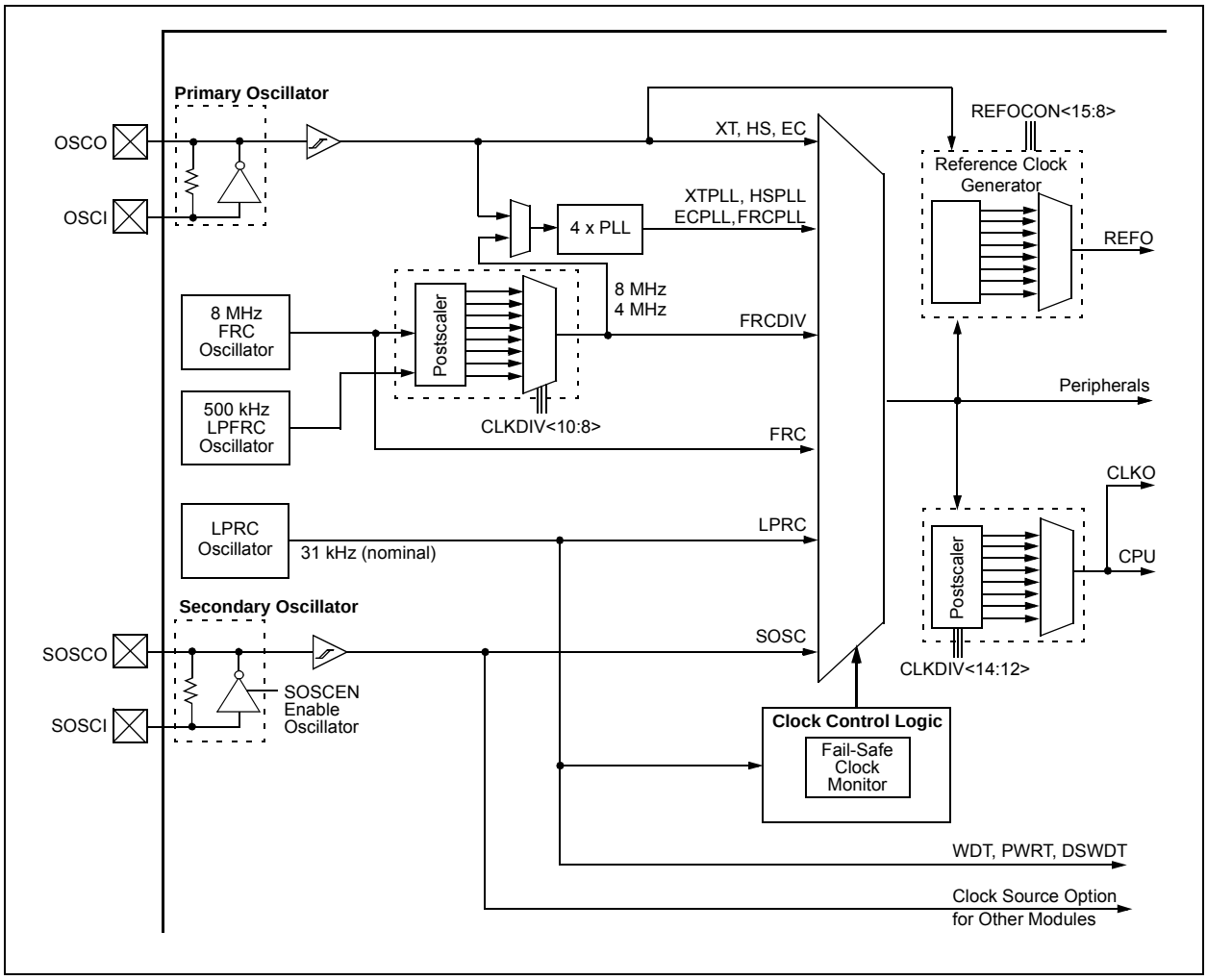

8.1 CPU Clocking Scheme

The system clock source can be provided by one of four sources:

- Primary Oscillator (POSC) on the OSCI and OSCO pins
- Secondary Oscillator (SOSC) on the SOSCI and SOSCO pins

  The PIC24F04KA201 family devices consist of two types of secondary oscillator:

  - High-Power Secondary Oscillator
  - Low-Power Secondary Oscillator

  These can be selected by using the SOSCSEL (FOSC<5>) bit.
- Fast Internal RC (FRC) Oscillator
  - 8 MHz FRC Oscillator
  - 500 kHz Lower Power FRC Oscillator
- Low-Power Internal RC (LPRC) Oscillator

The primary oscillator and 8 MHz FRC sources have the option of using the internal 4x PLL. The frequency of the FRC clock source can optionally be reduced by the programmable clock divider. The selected clock source generates the processor and peripheral clock sources.

The processor clock source is divided by two to produce the internal instruction cycle clock, FCY. In this document, the instruction cycle clock is also denoted by FOSC/2. The internal instruction cycle clock, FOSC/2, can be provided on the OSCO I/O pin for some operating modes of the primary oscillator.

8.2 Initial Configuration on POR

The oscillator source (and operating mode) that is used at a device Power-on Reset (POR) event is selected using Configuration bit settings. The oscillator Configuration bit settings are located in the Configuration registers in the program memory (refer to **Section 23.1 "Configuration Bits"** for further details). The Primary Oscillator Configuration bits, POSCMD<1:0> (FOSC<1:0>), and the Initial Oscillator Select Configuration bits, FNOSC<2:0> (FOSCSEL<2:0>), select the oscillator source that is used at a POR. The FRC primary oscillator with postscaler (FRCDIV) is the default (unprogrammed) selection. The secondary oscillator, or one of the internal oscillators, may be chosen by programming these bit locations. The EC mode frequency range Configuration bits, POSCFREQ<1:0> (FOSC<4:3>), optimize power consumption when running in EC mode. The default configuration is "frequency range is greater than 8 MHz".

The Configuration bits allow users to choose between the various clock modes, shown in Table 8-1.

8.2.1 CLOCK SWITCHING MODE CONFIGURATION BITS

The FCKSM Configuration bits (FOSC<7:6>) are used jointly to configure device clock switching and the FSCM. Clock switching is enabled only when FCKSM1 is programmed ('0'). The FSCM is enabled only when FCKSM<1:0> are both programmed ('00').

TABLE 8-1: CONFIGURATION BIT VALUES FOR CLOCK SELECTION

Oscillator Mode	Oscillator Source	POSCMD<1:0>	FNOSC<2:0>	Note
8 MHz FRC Oscillator with Postscaler (FRCDIV)	Internal	11	111	**1, 2**
500 MHz FRC Oscillator with Postscaler (LPFRCDIV)	Internal	11	110	**1**
Low-Power RC Oscillator (LPRC)	Internal	11	101	**1**
Secondary (Timer1) Oscillator (SOSC)	Secondary	00	100	**1**
Primary Oscillator (HS) with PLL Module (HSPLL)	Primary	10	011	
Primary Oscillator (EC) with PLL Module (ECPLL)	Primary	00	011	
Primary Oscillator (HS)	Primary	10	010	
Primary Oscillator (XT)	Primary	01	010	
Primary Oscillator (EC)	Primary	00	010	
8 MHz FRC Oscillator with PLL Module (FRCPLL)	Internal	11	001	**1**
8 MHz FRC Oscillator (FRC)	Internal	11	000	**1**

Note 1: OSCO pin function is determined by the OSCIOFNC Configuration bit.

2: This is the default oscillator mode for an unprogrammed (erased) device.

 © 2009 Microchip Technology Inc.

8.3 Control Registers

The operation of the oscillator is controlled by three Special Function Registers (SFRs):

- OSCCON
- CLKDIV
- OSCTUN

The OSCCON register (Register 8-1) is the main control register for the oscillator. It controls clock source switching and allows the monitoring of clock sources.

The Clock Divider register (Register 8-2) controls the features associated with Doze mode, as well as the postscaler for the FRC oscillator.

The FRC Oscillator Tune register (Register 8-3) allows the user to fine tune the FRC oscillator over a range of approximately ±12%. Each bit increment or decrement changes the factory calibrated frequency of the FRC oscillator by a fixed amount.

REGISTER 8-1: OSCCON: OSCILLATOR CONTROL REGISTER

U-0	R-0, HSC	R-0, HSC	R-0, HSC	U-0	R/W-x(1)	R/W-x(1)	R/W-x(1)
—	COSC2	COSC1	COSC0	—	NOSC2	NOSC1	NOSC0
bit 15							bit 8

R/SO-0, HSC	U-0	R-0, HSC(2)	U-0	R/CO-0, HS	U-0	R/W-0	R/W-0
CLKLOCK	—	LOCK	—	CF	—	SOSCEN	OSWEN
bit 7							bit 0

Legend:	CO = Clear Only bit	SO = Set Only bit	
	HS = Hardware Settable bit	HSC = Hardware Settable/Clearable bit	
R = Readable bit	W = Writable bit	U = Unimplemented bit, read as ‘0’	
-n = Value at POR	‘1’ = Bit is set	‘0’ = Bit is cleared	x = Bit is unknown

bit 15 **Unimplemented:** Read as ‘0’

bit 14-12 **COSC<2:0>:** Current Oscillator Selection bits

111 = 8 MHz Fast RC Oscillator with Postscaler (FRCDIV)
110 = 500 kHz Low-Power Fast RC Oscillator (FRC) with Postscaler (LPFRCDIV)
101 = Low-Power RC Oscillator (LPRC)
100 = Secondary Oscillator (SOSC)
011 = Primary Oscillator with PLL module (XTPLL, HSPLL, ECPLL)
010 = Primary Oscillator (XT, HS, EC)
001 = 8 MHz FRC Oscillator with Postscaler and PLL module (FRCPLL)
000 = 8 MHz FRC Oscillator (FRC)

bit 11 **Unimplemented:** Read as ‘0’

bit 10-8 **NOSC<2:0>:** New Oscillator Selection bits(1)

111 = 8 MHz Fast RC Oscillator with Postscaler (FRCDIV)
110 = 500 kHz Low-Power Fast RC Oscillator (FRC) with Postscaler (LPFRCDIV)
101 = Low-Power RC Oscillator (LPRC)
100 = Secondary Oscillator (SOSC)
011 = Primary Oscillator with PLL module (XTPLL, HSPLL, ECPLL)
010 = Primary Oscillator (XT, HS, EC)
001 = 8 MHz FRC Oscillator with Postscaler and PLL module (FRCPLL)
000 = 8 MHz FRC Oscillator (FRC)

Note 1: Reset values for these bits are determined by the FNOSC Configuration bits.

2: Also resets to ‘0’ during any valid clock switch or whenever a non-PLL Clock mode is selected.

REGISTER 8-1: OSCCON: OSCILLATOR CONTROL REGISTER (CONTINUED)

bit 7 **CLKLOCK:** Clock Selection Lock Enabled bit
If FSCM is enabled (FCKSM1 = 1):
1 = Clock and PLL selections are locked
0 = Clock and PLL selections are not locked and may be modified by setting the OSWEN bit
If FSCM is disabled (FCKSM1 = 0):
Clock and PLL selections are never locked and may be modified by setting the OSWEN bit.

bit 6 **Unimplemented:** Read as '0'

bit 5 **LOCK:** PLL Lock Status bit(2)
1 = PLL module is in lock or PLL module start-up timer is satisfied
0 = PLL module is out of lock, PLL start-up timer is running or PLL is disabled

bit 4 **Unimplemented:** Read as '0'

bit 3 **CF:** Clock Fail Detect bit
1 = FSCM has detected a clock failure
0 = No clock failure has been detected

bit 2 **Unimplemented:** Read as '0'

bit 1 **SOSCEN:** 32 kHz Secondary Oscillator (SOSC) Enable bit
1 = Enable secondary oscillator
0 = Disable secondary oscillator

bit 0 **OSWEN:** Oscillator Switch Enable bit
1 = Initiate an oscillator switch to clock source specified by NOSC<2:0> bits
0 = Oscillator switch is complete

Note 1: Reset values for these bits are determined by the FNOSC Configuration bits.
2: Also resets to '0' during any valid clock switch or whenever a non-PLL Clock mode is selected.

 © 2009 Microchip Technology Inc.

REGISTER 8-2: CLKDIV: CLOCK DIVIDER REGISTER

R/W-0	R/W-0	R/W-1	R/W-1	R/W-0	R/W-0	R/W-0	R/W-1
ROI	DOZE2	DOZE1	DOZE0	DOZEN(1)	RCDIV2	RCDIV1	RCDIV0
bit 15							bit 8

U-0	U-0	U-0	U-0	U-0	U-0	U-0	U-0
—	—	—	—	—	—	—	—
bit 7							bit 0

Legend:			
R = Readable bit	W = Writable bit	U = Unimplemented bit, read as ‘0’	
-n = Value at POR	‘1’ = Bit is set	‘0’ = Bit is cleared	x = Bit is unknown

bit 15 **ROI:** Recover on Interrupt bit
1 = Interrupts clear the DOZEN bit and reset the CPU and peripheral clock ratio to 1:1
0 = Interrupts have no effect on the DOZEN bit

bit 14-12 **DOZE<2:0>:** CPU and Peripheral Clock Ratio Select bits
111 = 1:128
110 = 1:64
101 = 1:32
100 = 1:16
011 = 1:8
010 = 1:4
001 = 1:2
000 = 1:1

bit 11 **DOZEN:** DOZE Enable bit(1)
1 = DOZE<2:0> bits specify the CPU and peripheral clock ratio
0 = CPU and peripheral clock ratio set to 1:1

bit 10-8 **RCDIV<2:0>:** FRC Postscaler Select bits
When OSCCON (COSC<2:0>) = 111:
111 = 31.25 kHz (divide by 256)
110 = 125 kHz (divide by 64)
101 = 250 kHz (divide by 32)
100 = 500 kHz (divide by 16)
011 = 1 MHz (divide by 8)
010 = 2 MHz (divide by 4)
001 = 4 MHz (divide by 2) (default)
000 = 8 MHz (divide by 1)
When OSCCON (COSC<2:0>) = 110:
111 = 1.95 kHz (divide by 256)
110 = 7.81 kHz (divide by 64)
101 = 15.62 kHz (divide by 32)
100 = 31.25 kHz (divide by 16)
011 = 62.5 kHz (divide by 8)
010 = 125 kHz (divide by 4)
001 = 250 kHz (divide by 2) (default)
000 = 500 kHz (divide by 1)

bit 7-0 **Unimplemented:** Read as ‘0’

Note 1: This bit is automatically cleared when the ROI bit is set and an interrupt occurs.

REGISTER 8-3: OSCTUN: FRC OSCILLATOR TUNE REGISTER

U-0	U-0	U-0	U-0	U-0	U-0	U-0	U-0
—	—	—	—	—	—	—	—
bit 15							bit 8

U-0	U-0	R/W-0	R/W-0	R/W-0	R/W-0	R/W-0	R/W-0
—	—	TUN5(1)	TUN4(1)	TUN3(1)	TUN2(1)	TUN1(1)	TUN0(1)
bit 7							bit 0

Legend:			
R = Readable bit	W = Writable bit	U = Unimplemented bit, read as ‘0’	
-n = Value at POR	‘1’ = Bit is set	‘0’ = Bit is cleared	x = Bit is unknown

bit 15-6 **Unimplemented:** Read as ‘0’

bit 5-0 **TUN<5:0>:** FRC Oscillator Tuning bits(1)

011111 = Maximum frequency deviation
011110
.
.
.
000001
000000 = Center frequency, oscillator is running at factory calibrated frequency
111111
.
.
.
100001
100000 = Minimum frequency deviation

Note 1: Increments or decrements of TUN<5:0> may not change the FRC frequency in equal steps over the FRC tuning range and may not be monotonic.

 © 2009 Microchip Technology Inc.

8.4 Clock Switching Operation

With few limitations, applications are free to switch between any of the four clock sources (POSC, SOSC, FRC and LPRC) under software control and at any time. To limit the possible side effects that could result from this flexibility, PIC24F devices have a safeguard lock built into the switching process.

Note:	The primary oscillator mode has three different submodes (XT, HS and EC), which are determined by the POSCMDx Configuration bits. While an application can switch to and from primary oscillator mode in software, it cannot switch between the different primary submodes without reprogramming the device.

8.4.1 ENABLING CLOCK SWITCHING

To enable clock switching, the FCKSM1 Configuration bit in the FOSC Configuration register must be programmed to '0'. (Refer to **Section 23.1 "Configuration Bits"** for further details.) If the FCKSM1 Configuration bit is unprogrammed ('1'), the clock switching function and FSCM function are disabled. This is the default setting.

The NOSCx control bits (OSCCON<10:8>) do not control the clock selection when clock switching is disabled. However, the COSCx bits (OSCCON<14:12>) will reflect the clock source selected by the FNOSCx Configuration bits.

The OSWEN control bit (OSCCON<0>) has no effect when clock switching is disabled; it is held at '0' at all times.

8.4.2 OSCILLATOR SWITCHING SEQUENCE

At a minimum, performing a clock switch requires this basic sequence:

1. If desired, read the COSCx bits (OSCCON<14:12>), to determine the current oscillator source.
2. Perform the unlock sequence to allow a write to the OSCCON register high byte.
3. Write the appropriate value to the NOSCx bits (OSCCON<10:8>) for the new oscillator source.
4. Perform the unlock sequence to allow a write to the OSCCON register low byte.
5. Set the OSWEN bit to initiate the oscillator switch.

Once the basic sequence is completed, the system clock hardware responds automatically as follows:

1. The clock switching hardware compares the COSCx bits with the new value of the NOSCx bits. If they are the same, then the clock switch is a redundant operation. In this case, the OSWEN bit is cleared automatically and the clock switch is aborted.
2. If a valid clock switch has been initiated, the LOCK (OSCCON<5>) and CF (OSCCON<3>) bits are cleared.
3. The new oscillator is turned on by the hardware if it is not currently running. If a crystal oscillator must be turned on, the hardware will wait until the OST expires. If the new source is using the PLL, then the hardware waits until a PLL lock is detected (LOCK = 1).
4. The hardware waits for 10 clock cycles from the new clock source and then performs the clock switch.
5. The hardware clears the OSWEN bit to indicate a successful clock transition. In addition, the NOSCx bits value is transferred to the COSCx bits.
6. The old clock source is turned off at this time, with the exception of LPRC (if WDT or FSCM with LPRC as a clock source is enabled) or SOSC (if SOSCEN remains enabled).

Note 1:	The processor will continue to execute code throughout the clock switching sequence. Timing-sensitive code should not be executed during this time.
2:	Direct clock switches between any primary oscillator mode with PLL and FRCPLL mode are not permitted. This applies to clock switches in either direction. In these instances, the application must switch to FRC mode as a transition clock source between the two PLL modes.

The following code sequence for a clock switch is recommended:

1. Disable interrupts during the OSCCON register unlock and write sequence.
2. Execute the unlock sequence for the OSCCON high byte by writing 78h and 9Ah to OSCCON<15:8> in two back-to-back instructions.
3. Write new oscillator source to the NOSCx bits in the instruction immediately following the unlock sequence.
4. Execute the unlock sequence for the OSCCON low byte by writing 46h and 57h to OSCCON<7:0> in two back-to-back instructions.
5. Set the OSWEN bit in the instruction immediately following the unlock sequence.
6. Continue to execute code that is not clock-sensitive (optional).
7. Invoke an appropriate amount of software delay (cycle counting) to allow the selected oscillator and/or PLL to start and stabilize.
8. Check to see if OSWEN is '0'. If it is, the switch was successful. If OSWEN is still set, then check the LOCK bit to determine the cause of failure.

The core sequence for unlocking the OSCCON register and initiating a clock switch is provided in Example 8-1.

EXAMPLE 8-1: BASIC CODE SEQUENCE FOR CLOCK SWITCHING

```
;Place the new oscillator selection in W0
;OSCCONH (high byte) Unlock Sequence
MOV        #OSCCONH, w1
MOV        #0x78, w2
MOV        #0x9A, w3
MOV.b      w2, [w1]
MOV.b      w3, [w1]
;Set new oscillator selection
MOV.b      WREG, OSCCONH
;OSCCONL (low byte) unlock sequence
MOV        #OSCCONL, w1
MOV        #0x46, w2
MOV        #0x57, w3
MOV.b      w2, [w1]
MOV.b      w3, [w1]
;Start oscillator switch operation
BSET       OSCCON,#0
```

8.5 Reference Clock Output

In addition to the CLKO output (FOSC/2) available in certain oscillator modes, the device clock in the PIC24F04KA201 family devices can also be configured to provide a reference clock output signal to a port pin. This feature is available in all oscillator configurations and allows the user to select a greater range of clock submultiples to drive external devices in the application.

This reference clock output is controlled by the REFOCON register (Register 8-4). Setting the ROEN bit (REFOCON<15>) makes the clock signal available on the REFO pin. The RODIV bits (REFOCON<11:8>) enable the selection of 16 different clock divider options.

The ROSSLP and ROSEL bits (REFOCON<13:12>) control the availability of the reference output during Sleep mode. The ROSEL bit determines if the oscillator on OSC1 and OSC2, or the current system clock source, is used for the reference clock output. The ROSSLP bit determines if the reference source is available on REFO when the device is in Sleep mode.

To use the reference clock output in Sleep mode, both the ROSSLP and ROSEL bits must be set. The device clock must also be configured for one of the primary modes (EC, HS or XT); otherwise, if the ROSEL bit is not also set, the oscillator on OSC1 and OSC2 will be powered down when the device enters Sleep mode. Clearing the ROSEL bit allows the reference output frequency to change as the system clock changes during any clock switches.

 © 2009 Microchip Technology Inc.

REGISTER 8-4: REFOCON: REFERENCE OSCILLATOR CONTROL REGISTER

R/W-0	U-0	R/W-0	R/W-0	R/W-0	R/W-0	R/W-0	R/W-0
ROEN	—	ROSSLP	ROSEL	RODIV3	RODIV2	RODIV1	RODIV0
bit 15							bit 8

U-0	U-0	U-0	U-0	U-0	U-0	U-0	U-0
—	—	—	—	—	—	—	—
bit 7							bit 0

Legend:			
R = Readable bit	W = Writable bit	U = Unimplemented bit, read as ‘0’	
-n = Value at POR	‘1’ = Bit is set	‘0’ = Bit is cleared	x = Bit is unknown

bit 15 **ROEN:** Reference Oscillator Output Enable bit
1 = Reference oscillator enabled on REFO pin
0 = Reference oscillator disabled

bit 14 **Unimplemented:** Read as ‘0’

bit 13 **ROSSLP:** Reference Oscillator Output Stop in Sleep bit
1 = Reference oscillator continues to run in Sleep
0 = Reference oscillator is disabled in Sleep

bit 12 **ROSEL:** Reference Oscillator Source Select bit
1 = Primary oscillator used as the base clock(1)
0 = System clock used as the base clock; base clock reflects any clock switching of the device

bit 11-8 **RODIV3:RODIV0:** Reference Oscillator Divisor Select bits
1111 = Base clock value divided by 32,768
1110 = Base clock value divided by 16,384
1101 = Base clock value divided by 8,192
1100 = Base clock value divided by 4,096
1011 = Base clock value divided by 2,048
1010 = Base clock value divided by 1,024
1001 = Base clock value divided by 512
1000 = Base clock value divided by 256
0111 = Base clock value divided by 128
0110 = Base clock value divided by 64
0101 = Base clock value divided by 32
0100 = Base clock value divided by 16
0011 = Base clock value divided by 8
0010 = Base clock value divided by 4
0001 = Base clock value divided by 2
0000 = Base clock value

bit 7-0 **Unimplemented:** Read as ‘0’

Note 1: The crystal oscillator must be enabled using the FOSC<2:0> bits; the crystal maintains the operation in Sleep mode.

NOTES:

 © 2009 Microchip Technology Inc.

9.0 POWER-SAVING FEATURES

Note:	This data sheet summarizes the features of this group of PIC24F devices. It is not intended to be a comprehensive reference source. For more information, refer to the *"PIC24F Family Reference Manual"*, **Section 39. "Power-Saving Features with Deep Sleep"** (DS39727).

The PIC24F04KA201 family of devices provides the ability to manage power consumption by selectively managing clocking to the CPU and the peripherals. In general, a lower clock frequency and a reduction in the number of circuits being clocked constitutes lower consumed power. All PIC24F devices manage power consumption in four different ways:

- Clock frequency
- Instruction-based Sleep, Idle and Deep Sleep modes
- Software controlled Doze mode
- Selective peripheral control in software

Combinations of these methods can be used to selectively tailor an application's power consumption, while still maintaining critical application features, such as timing-sensitive communications.

9.1 Clock Frequency and Clock Switching

PIC24F devices allow for a wide range of clock frequencies to be selected under application control. If the system clock configuration is not locked, users can choose low-power or high-precision oscillators by simply changing the NOSC bits. The process of changing a system clock during operation, as well as limitations to the process, are discussed in more detail in **Section 8.0 "Oscillator Configuration"**.

9.2 Instruction-Based Power-Saving Modes

PIC24F devices have two special power-saving modes that are entered through the execution of a special PWRSAV instruction. Sleep mode stops clock operation and halts all code execution; Idle mode halts the CPU and code execution, but allows peripheral modules to continue operation. Deep Sleep mode stops clock operation, code execution and all peripherals except DSWDT. It also freezes I/O states and removes power to SRAM and Flash memory.

The assembly syntax of the PWRSAV instruction is shown in Example 9-1.

Note:	SLEEP_MODE and IDLE_MODE are constants defined in the assembler include file for the selected device.

Sleep and Idle modes can be exited as a result of an enabled interrupt, WDT time-out or a device Reset. When the device exits these modes, it is said to "wake-up".

9.2.1 SLEEP MODE

Sleep mode has these features:

- The system clock source is shut down. If an on-chip oscillator is used, it is turned off.
- The device current consumption will be reduced to a minimum provided that no I/O pin is sourcing current.
- The I/O pin directions and states are frozen.
- The Fail-Safe Clock Monitor does not operate during Sleep mode since the system clock source is disabled.
- The LPRC clock will continue to run in Sleep mode if the WDT with LPRC as a clock source is enabled.
- The WDT, if enabled, is automatically cleared prior to entering Sleep mode.
- Some device features or peripherals may continue to operate in Sleep mode. This includes items such as the input change notification on the I/O ports, or peripherals that use an external clock input. Any peripheral that requires the system clock source for its operation will be disabled in Sleep mode.

The device will wake-up from Sleep mode on any of these events:

- On any interrupt source that is individually enabled
- On any form of device Reset
- On a WDT time-out

On wake-up from Sleep, the processor will restart with the same clock source that was active when Sleep mode was entered.

EXAMPLE 9-1: PWRSAV INSTRUCTION SYNTAX

```
PWRSAV     #SLEEP_MODE    ; Put the device into SLEEP mode
PWRSAV     #IDLE_MODE     ; Put the device into IDLE mode
BSET       DSCON, #DSEN   ; Enable Deep Sleep
PWRSAV     #SLEEP_MODE    ; Put the device into Deep SLEEP mode
```

9.2.2 IDLE MODE

Idle mode has these features:

- The CPU will stop executing instructions.
- The WDT is automatically cleared.
- The system clock source remains active. By default, all peripheral modules continue to operate normally from the system clock source, but can also be selectively disabled (see **Section 9.4 "Selective Peripheral Module Control"**).
- If the WDT or FSCM is enabled, the LPRC will also remain active.

The device will wake from Idle mode on any of these events:

- Any interrupt that is individually enabled
- Any device Reset
- A WDT time-out

On wake-up from Idle, the clock is reapplied to the CPU and instruction execution begins immediately, starting with the instruction following the PWRSAV instruction or the first instruction in the ISR.

9.2.3 INTERRUPTS COINCIDENT WITH POWER SAVE INSTRUCTIONS

Any interrupt that coincides with the execution of a PWRSAV instruction will be held off until entry into Sleep or Idle mode has completed. The device will then wake-up from Sleep or Idle mode.

9.2.4 DEEP SLEEP MODE

In PIC24F04KA201 family devices, Deep Sleep mode is intended to provide the lowest levels of power consumption available, without requiring the use of external switches to completely remove all power from the device. Entry into Deep Sleep mode is completely under software control. Exit from Deep Sleep mode can be triggered from any of the following events:

- POR event
- $\overline{\text{MCLR}}$ event
- External Interrupt 0
- Deep Sleep Watchdog Timer (DSWDT) time-out

The device has a dedicated Deep Sleep Brown-out Reset (DSBOR) and a Deep Sleep Watchdog Timer Reset (DSWDT) for monitoring voltage and time-out events. The DSBOR and DSWDT are independent of the standard BOR and WDT used with other power-managed modes (Sleep, Idle and Doze).

9.2.4.1 Entering Deep Sleep Mode

Deep Sleep mode is entered by setting the DSEN bit in the DSCON register, and then executing a SLEEP instruction (PWRSAV #SLEEP_MODE) within one instruction cycle to minimize the chance that Deep Sleep will be spuriously entered.

If the PWRSAV command is not given within one instruction cycle, the DSEN bit will be cleared by the hardware and must be set again by the software before entering Deep Sleep mode. The DSEN bit is also automatically cleared when exiting the Deep Sleep mode.

Note:	To re-enter Deep Sleep after a Deep Sleep wake-up, allow a delay of at least 3 TCY after clearing the RELEASE bit.

The sequence to enter Deep Sleep mode is:

1. If the application requires the Deep Sleep WDT, enable it and configure its clock source (see **Section 9.2.4.5 "Deep Sleep WDT"** for details).
2. If the application requires Deep Sleep BOR, enable it by programming the DSBOREN Configuration bit (FDS<6>).
3. If needed, save any critical application context data by writing it to the DSGPR0 and DSGPR1 registers (optional).
4. Enable Deep Sleep mode by setting the DSEN bit (DSCON<15>).
5. Enter Deep Sleep mode by issuing 3 NOP commands and then a PWRSAV #0 instruction.

Any time the DSEN bit is set, all bits in the DSWSRC register will be automatically cleared.

9.2.4.2 Exiting Deep Sleep Mode

Deep Sleep mode exits on any one of the following events:

- POR event on VDD supply. If there is no DSBOR circuit to re-arm the VDD supply POR circuit, the external VDD supply must be lowered to the natural arming voltage of the POR circuit.
- DSWDT time-out. When the DSWDT timer times out, the device exits Deep Sleep.
- Assertion ('0') of the $\overline{\text{MCLR}}$ pin.
- Assertion of the INT0 pin (if the interrupt was enabled before Deep Sleep mode was entered). The polarity configuration is used to determine the assertion level ('0' or '1') of the pin that will cause an exit from Deep Sleep mode. Exiting from Deep Sleep mode requires a change on the INT0 pin while in Deep Sleep mode.

 © 2009 Microchip Technology Inc.

Note:	Any interrupt pending when entering Deep Sleep mode is cleared,

Exiting Deep Sleep mode generally does not retain the state of the device and is equivalent to a Power-on Reset (POR) of the device. Exceptions to this include the DSGPRx registers and DSWSRC.

Wake-up events that occur from the time Deep Sleep exits until the time the POR sequence completes are ignored, and are not be captured in the DSWAKE register.

The sequence for exiting Deep Sleep mode is:

1. After a wake-up event, the device exits Deep Sleep and performs a POR. The DSEN bit is cleared automatically. Code execution resumes at the Reset vector.
2. To determine if the device exited Deep Sleep, read the Deep Sleep bit, DPSLP (RCON<10>). This bit will be set if there was an exit from Deep Sleep mode. If the bit is set, clear it.
3. Determine the wake-up source by reading the DSWAKE register.
4. Determine if a DSBOR event occurred during Deep Sleep mode by reading the DSBOR bit (DSCON<1>).
5. If application context data has been saved, read it back from the DSGPR0 and DSGPR1 registers.
6. Clear the RELEASE bit (DSCON<0>).

9.2.4.3 Saving Context Data with the DSGPR0/DSGPR1 Registers

As exiting Deep Sleep mode causes a POR, most Special Function Registers reset to their default POR values. In addition, because V_{DDCORE} power is not supplied in Deep Sleep mode, information in data RAM may be lost when exiting this mode.

Applications which require critical data to be saved prior to Deep Sleep may use the Deep Sleep General Purpose registers, DSGPR0 and DSGPR1, or data EEPROM (if available). Unlike other SFRs, the contents of these registers are preserved while the device is in Deep Sleep mode. After exiting Deep Sleep, software can restore the data by reading the registers and clearing the RELEASE bit (DSCON<0>).

9.2.4.4 I/O Pins During Deep Sleep

During Deep Sleep, the general purpose I/O pins retain their previous states and the Secondary Oscillator (SOSC) will remain running, if enabled. Pins that are configured as inputs (TRIS bit set) prior to entry into Deep Sleep remain high-impedance during Deep Sleep. Pins that are configured as outputs (TRIS bit clear) prior to entry into Deep Sleep remain as output pins during Deep Sleep. While in this mode, they continue to drive the output level determined by their corresponding LAT bit at the time of entry into Deep Sleep.

Once the device wakes back up, all I/O pins continue to maintain their previous states, even after the device has finished the POR sequence and is executing application code again. Pins configured as inputs during Deep Sleep remain high-impedance and pins configured as outputs continue to drive their previous value. After waking up, the TRIS and LAT registers, and the SOSCEN bit (OSCCON<1>) are reset. If firmware modifies any of these bits or registers, the I/O will not immediately go to the newly configured states. Once the firmware clears the RELEASE bit (DSCON<0>) the I/O pins are “released”. This causes the I/O pins to take the states configured by their respective TRIS and LAT bit values.

This means that keeping the SOSC running after waking up requires the SOSCEN bit to be set before clearing RELEASE.

If the Deep Sleep BOR (DSBOR) is enabled, and a DSBOR or a true POR event occurs during Deep Sleep, the I/O pins will be immediately released similar to clearing the RELEASE bit. All previous state information will be lost, including the general purpose DSGPR0 and DSGPR1 contents.

If a $\overline{MCLR}$ Reset event occurs during Deep Sleep, the DSGPRx, DSCON and DSWAKE registers will remain valid and the RELEASE bit will remain set. The state of the SOSC also will be retained. The I/O pins, however, will be reset to their $\overline{MCLR}$ Reset state. Since RELEASE is still set, changes to the SOSCEN bit (OSCCON<1>) cannot take effect until the RELEASE bit is cleared.

In all other Deep Sleep wake-up cases, application firmware must clear the RELEASE bit in order to reconfigure the I/O pins.

9.2.4.5 Deep Sleep WDT

To enable the DSWDT in Deep Sleep mode, program the Configuration bit, DSWDTEN (FDS<7>). The device Watchdog Timer (WDT) need not be enabled for the DSWDT to function. Entry into Deep Sleep mode automatically resets the DSWDT.

The DSWDT clock source is selected by the DSWDTOSC Configuration bit (FDS<4>). The postscaler options are programmed by the DSWDTPS<3:0> Configuration bits (FDS<3:0>). The minimum time-out period that can be achieved is 2.1 ms and the maximum is 25.7 days. For more details on the FDS Configuration register and DSWDT configuration options, refer to **Section 23.0 "Special Features"**.

9.2.4.6 Switching Clocks in Deep Sleep Mode

The DSWDT may run from either SOSC or the LPRC clock source. This allows the DSWDT to run without requiring both the LPRC and SOSC to be enabled together, reducing power consumption.

Under certain circumstances, it is possible for the DSWDT clock source to be off when entering Deep Sleep mode. In this case, the clock source is turned on automatically (if DSWDT is enabled), without the need for software intervention. However, this can cause a delay in the start of the DSWDT counters. In order to avoid this delay when using SOSC as a clock source, the application can activate SOSC prior to entering Deep Sleep mode.

9.2.4.7 Checking and Clearing the Status of Deep Sleep

Upon entry into Deep Sleep mode, the status bit, DPSLP (RCON<10>), becomes set and must be cleared by the software.

On power-up, the software should read this status bit to determine if the Reset was due to an exit from Deep Sleep mode and clear the bit if it is set. Of the four possible combinations of DPSLP and POR bit states, three cases can be considered:

- Both the DPSLP and POR bits are cleared. In this case, the Reset was due to some event other than a Deep Sleep mode exit.
- The DPSLP bit is clear, but the POR bit is set. This is a normal POR.
- Both the DPSLP and POR bits are set. This means that Deep Sleep mode was entered, the device was powered down and Deep Sleep mode was exited.

9.2.4.8 Power-on Resets (PORs)

V_{DD} voltage is monitored to produce PORs. Since exiting from Deep Sleep functionally looks like a POR, the technique described in **Section 9.2.4.7 "Checking and Clearing the Status of Deep Sleep"** should be used to distinguish between Deep Sleep and a true POR event.

When a true POR occurs, the entire device including all Deep Sleep logic, (Deep Sleep registers, DSWDT, etc.) is reset.

9.2.4.9 Summary of Deep Sleep Sequence

To review, these are the necessary steps involved in invoking and exiting Deep Sleep mode:

1. Device exits Reset and begins to execute its application code.
2. If DSWDT functionality is required, program the appropriate Configuration bit.
3. Select the appropriate clock(s) for the DSWDT (optional).
4. Enable and configure the DSWDT (optional).
5. Write context data to the DSGPRx registers (optional).
6. Enable the INT0 interrupt (optional).
7. Set the DSEN bit in the DSCON register.
8. Enter Deep Sleep by issuing a `PWRSV #SLEEP_MODE` command.
9. Device exits Deep Sleep when a wake-up event occurs.
10. The DSEN bit is automatically cleared.
11. Read and clear the DPSLP status bit in RCON, and the DSWAKE status bits.
12. Read the DSGPRx registers (optional).
13. Once all state related configurations are complete, clear the RELEASE bit.
14. Application resumes normal operation.

 © 2009 Microchip Technology Inc.

REGISTER 9-1: DSCON: DEEP SLEEP CONTROL REGISTER(1)

R/W-0	U-0	U-0	U-0	U-0	U-0	U-0	U-0
DSEN	—	—	—	—	—	—	—
bit 15							bit 8

U-0	U-0	U-0	U-0	U-0	U-0	R/W-0	R/C-0, HS
—	—	—	—	—	—	DSBOR(2)	RELEASE
bit 7							bit 0

Legend:	C = Clearable bit	HS = Hardware Settable bit	
R = Readable bit	W = Writable bit	U = Unimplemented bit, read as ‘0’	
-n = Value at POR	‘1’ = Bit is set	‘0’ = Bit is cleared	x = Bit is unknown

bit 15 **DSEN:** Deep Sleep Enable bit
`1` = Enters Deep Sleep on execution of `PWRSAV #0`
`0` = Enters normal Sleep on execution of `PWRSAV #0`

bit 14-2 **Unimplemented:** Read as ‘`0`’

bit 1 **DSBOR:** Deep Sleep BOR Event bit(2)
`1` = The DSBOR was active and a BOR event was detected during Deep Sleep
`0` = The DSBOR was not active, or was active but did not detect a BOR event during Deep Sleep

bit 0 **RELEASE:** I/O Pin State Release bit
`1` = Upon waking from Deep Sleep, I/O pins maintain their states previous to Deep Sleep entry
`0` = Release I/O pins from their state previous to Deep Sleep entry, and allow their respective TRIS and LAT bits to control their states

Note 1: All register bits are reset only in the case of a POR event outside of Deep Sleep mode.
2: Unlike all other events, a Deep Sleep BOR event will NOT cause a wake-up from Deep Sleep; this re-arms POR.

REGISTER 9-2: DSWSRC: DEEP SLEEP WAKE-UP SOURCE REGISTER(1)

U-0	U-0	U-0	U-0	U-0	U-0	U-0	R/W-0, HS
—	—	—	—	—	—	—	DSINT0
bit 15							bit 8

R/W-0, HS	U-0	U-0	R/W-0, HS	U-0	R/W-0, HS	U-0	R/W-0, HS
DSFLT	—	—	DSWDT	—	DSMCLR	—	DSPOR(2,3)
bit 7							bit 0

Legend:	HS = Hardware Settable bit		
R = Readable bit	W = Writable bit	U = Unimplemented bit, read as ‘0’	
-n = Value at POR	‘1’ = Bit is set	‘0’ = Bit is cleared	x = Bit is unknown

bit 15-9 **Unimplemented:** Read as ‘0’

bit 8 **DSINT0:** Interrupt-on-Change bit
1 = Interrupt-on-change was asserted during Deep Sleep
0 = Interrupt-on-change was not asserted during Deep Sleep

bit 7 **DSFLT:** Deep Sleep Fault Detected bit
1 = A Fault occurred during Deep Sleep, and some Deep Sleep configuration settings may have been corrupted
0 = No Fault was detected during Deep Sleep

bit 6-5 **Unimplemented:** Read as ‘0’

bit 4 **DSWDT:** Deep Sleep Watchdog Timer Time-out bit
1 = The Deep Sleep Watchdog Timer timed out during Deep Sleep
0 = The Deep Sleep Watchdog Timer did not time out during Deep Sleep

bit 3 **Unimplemented:** Read as ‘0’

bit 2 **DSMCLR:** $\overline{\text{MCLR}}$ Event bit
1 = The $\overline{\text{MCLR}}$ pin was active and was asserted during Deep Sleep
0 = The $\overline{\text{MCLR}}$ pin was not active, or was active, but not asserted during Deep Sleep

bit 1 **Unimplemented:** Read as ‘0’

bit 0 **DSPOR:** Power-on Reset Event bit(2,3)
1 = The V_{DD} supply POR circuit was active and a POR event was detected
0 = The V_{DD} supply POR circuit was not active, or was active but did not detect a POR event

Note 1: All register bits are cleared when the DSCON<DSEN> bit is set.
2: All register bits are reset only in the case of a POR event outside Deep Sleep mode, except the DSPOR bit, which does not reset on a POR event that is caused due to a Deep Sleep exit.
3: Unlike the other bits in this register, this bit can be set outside of Deep Sleep.

 © 2009 Microchip Technology Inc.

9.2.5 INTERRUPTS COINCIDENT WITH POWER SAVE INSTRUCTIONS

Any interrupt that coincides with the execution of a PWRSAV instruction will be held off until entry into Sleep or Idle mode is completed. The device will then wake-up from Sleep or Idle mode.

9.3 Doze Mode

Generally, changing clock speed and invoking one of the power-saving modes are the preferred strategies for reducing power consumption. There may be circumstances, however, where this is not practical. For example, it may be necessary for an application to maintain uninterrupted synchronous communication, even while it is doing nothing else. Reducing system clock speed may introduce communication errors, while using a power-saving mode may stop communications completely.

Doze mode is a simple and effective alternative method to reduce power consumption while the device is still executing code. In this mode, the system clock continues to operate from the same source and at the same speed. Peripheral modules continue to be clocked at the same speed while the CPU clock speed is reduced. Synchronization between the two clock domains is maintained, allowing the peripherals to access the SFRs while the CPU executes code at a slower rate.

Doze mode is enabled by setting the DOZEN bit (CLKDIV<11>). The ratio between peripheral and core clock speed is determined by the DOZE<2:0> bits (CLKDIV<14:12>). There are eight possible configurations, from 1:1 to 1:128, with 1:1 being the default.

It is also possible to use Doze mode to selectively reduce power consumption in event driven applications. This allows clock-sensitive functions, such as synchronous communications, to continue without interruption while the CPU Idles, waiting for something to invoke an interrupt routine. Enabling the automatic return to full-speed CPU operation on interrupts is enabled by setting the ROI bit (CLKDIV<15>). By default, interrupt events have no effect on Doze mode operation.

9.4 Selective Peripheral Module Control

Idle and Doze modes allow users to substantially reduce power consumption by slowing or stopping the CPU clock. Even so, peripheral modules still remain clocked, and thus, consume power. There may be cases where the application needs what these modes do not provide: the allocation of power resources to CPU processing with minimal power consumption from the peripherals.

PIC24F devices address this requirement by allowing peripheral modules to be selectively disabled, reducing or eliminating their power consumption. This can be done with two control bits:

- The Peripheral Enable bit, generically named, “XXXEN”, located in the module’s main control SFR.
- The Peripheral Module Disable (PMD) bit, generically named, “XXXMD”, located in one of the PMD Control registers.

Both bits have similar functions in enabling or disabling its associated module. Setting the PMD bit for a module disables all clock sources to that module, reducing its power consumption to an absolute minimum. In this state, the control and status registers associated with the peripheral will also be disabled, so writes to those registers will have no effect and read values will be invalid. Many peripheral modules have a corresponding PMD bit.

In contrast, disabling a module by clearing its XXXEN bit disables its functionality, but leaves its registers available to be read and written to. Power consumption is reduced, but not by as much as the PMD bits are used. Most peripheral modules have an enable bit; exceptions include capture and compare modules.

To achieve more selective power savings, peripheral modules can also be selectively disabled when the device enters Idle mode. This is done through the control bit of the generic name format, “XXXIDL”. By default, all modules that can operate during Idle mode will do so. Using the disable on Idle feature disables the module while in Idle mode, allowing further reduction of power consumption during Idle mode, enhancing power savings for extremely critical power applications.

NOTES:

 © 2009 Microchip Technology Inc.

10.0 I/O PORTS

Note:	This data sheet summarizes the features of this group of PIC24F devices. It is not intended to be a comprehensive reference source. For more information on the I/O Ports, refer to the *"PIC24F Family Reference Manual"*, **Section 12. "I/O Ports with Peripheral Pin Select (PPS)"** (DS39711). Note that the PIC24F04KA201 family devices do not support Peripheral Pin Select features.

All of the device pins (except VDD and VSS) are shared between the peripherals and the parallel I/O ports. All I/O input ports feature Schmitt Trigger inputs for improved noise immunity.

10.1 Parallel I/O (PIO) Ports

A parallel I/O port that shares a pin with a peripheral is, in general, subservient to the peripheral. The peripheral's output buffer data and control signals are provided to a pair of multiplexers. The multiplexers select whether the peripheral or the associated port has ownership of the output data and control signals of the I/O pin. The logic also prevents "loop through", in which a port's digital output can drive the input of a peripheral that shares the same pin. Figure 10-1 displays how ports are shared with other peripherals and the associated I/O pin to which they are connected.

When a peripheral is enabled and the peripheral is actively driving an associated pin, the use of the pin as a general purpose output pin is disabled. The I/O pin may be read, but the output driver for the parallel port bit will be disabled. If a peripheral is enabled, but the peripheral is not actively driving a pin, that pin may be driven by a port.

All port pins have three registers directly associated with their operation as digital I/O. The Data Direction register (TRISx) determines whether the pin is an input or an output. If the data direction bit is a '1', then the pin is an input. All port pins are defined as inputs after a Reset. Reads from the Data Latch register (LATx), read the latch. Writes to the latch, write the latch. Reads from the port (PORTx), read the port pins, while writes to the port pins, write the latch.

Any bit and its associated data and control registers that are not valid for a particular device will be disabled. That means the corresponding LATx and TRISx registers and the port pin will read as zeros.

When a pin is shared with another peripheral or function that is defined as an input only, it is nevertheless regarded as a dedicated port because there is no other competing source of outputs.

Note:	The I/O pins retain their state during Deep Sleep. They will retain this state at wake-up until the software restore bit (RELEASE) is cleared.

FIGURE 10-1: BLOCK DIAGRAM OF A TYPICAL SHARED PORT STRUCTURE

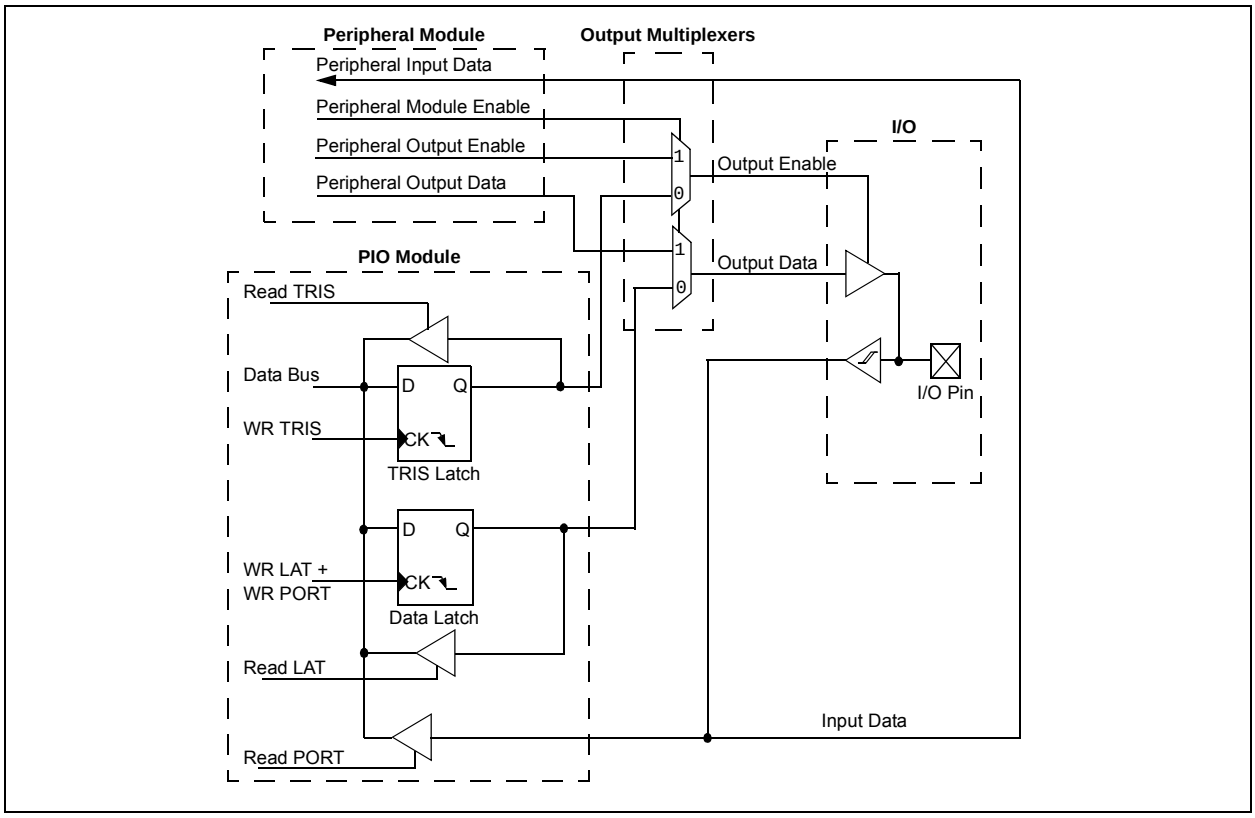

10.1.1 OPEN-DRAIN CONFIGURATION

In addition to the PORT, LAT and TRIS registers for data control, each port pin can also be individually configured for either digital or open-drain output. This is controlled by the Open-Drain Control register, ODCx, associated with each port. Setting any of the bits configures the corresponding pin to act as an open-drain output.

The maximum open-drain voltage allowed is the same as the maximum V_{IH} specification.

10.2 Configuring Analog Port Pins

The use of the AD1PCFG and TRIS registers control the operation of the A/D port pins. The port pins that are desired as analog inputs must have their corresponding TRIS bit set (input). If the TRIS bit is cleared (output), the digital output level (V_{OH} or V_{OL}) will be converted.

When reading the PORT register, all pins configured as analog input channels will read as cleared (a low level). Analog levels on any pin that is defined as a digital input (including the ANx pins) may cause the input buffer to consume current that exceeds the device specifications.

10.2.1 I/O PORT WRITE/READ TIMING

One instruction cycle is required between a port direction change or port write operation and a read operation of the same port. Typically, this instruction would be a `NOP`.

10.3 Input Change Notification

The input change notification function of the I/O ports allows the PIC24F04KA201 family of devices to generate interrupt requests to the processor in response to a change of state on selected input pins. This feature is capable of detecting input change of states even in Sleep mode, when the clocks are disabled. Depending on the device pin count, there are up to 17 external signals (11 on 14-pin devices) that may be selected (enabled) for generating an interrupt request on a change of state.

There are six control registers associated with the CN module. The CNEN1 and CNEN2 registers contain the interrupt enable control bits for each of the CN input pins. Setting any of these bits enables a CN interrupt for the corresponding pins.

Each CN pin also has a weak pull-up/pull-down connected to it. The pull-ups act as a current source that is connected to the pin and the pull-downs act as a current sink to eliminate the need for external resistors when push button or keypad devices are connected.

On any pin, only the pull-up resistor or the pull-down resistor should be enabled, but not both of them. If the push button or the keypad is connected to V_{DD}, enable the pull-down, or if they are connected to V_{SS}, enable the pull-up resistors. The pull-ups are enabled separately using the CNPU1 and CNPU2 registers, which contain the control bits for each of the CN pins.

Setting any of the control bits enables the weak pull-ups for the corresponding pins. The pull-downs are enabled separately using the CNPD1 and CNPD2 registers, which contain the control bits for each of the CN pins. Setting any of the control bits enables the weak pull-downs for the corresponding pins.

When the internal pull-up is selected, the pin uses V_{DD} as the pull-up source voltage. When the internal pull-down is selected, the pins are pulled down to V_{SS} by an internal resistor. Make sure that there is no external pull-up source/pull-down sink when the internal pull-ups/pull-downs are enabled.

Note:	Pull-ups and pull-downs on change notification pins should always be disabled whenever the port pin is configured as a digital output.

EXAMPLE 10-1: PORT WRITE/READ EXAMPLE

```
MOV   0xFF00, W0;          //Configure PORTB<15:8> as inputs and PORTB<7:0> as outputs
MOV   W0, TRISBB;
NOP;                       //Delay 1 cycle
BTSS  PORTB, #13;          //Next Instruction

Equivalent 'C' Code
TRISB = 0xFF00;            //Configure PORTB<15:8> as inputs and PORTB<7:0> as outputs
NOP();                     //Delay 1 cycle
if(PORTBbits.RB13 == 1)    // execute following code if PORTB pin 13 is set.
{
}
```

 © 2009 Microchip Technology Inc.

11.0 TIMER1

Note:	This data sheet summarizes the features of this group of PIC24F devices. It is not intended to be a comprehensive reference source. For more information on Timers, refer to the *"PIC24F Family Reference Manual"*, **Section 14. "Timers"** (DS39704).

The Timer1 module is a 16-bit timer which can operate as a free-running, interval timer/counter. Timer1 can operate in three modes:

- 16-Bit Timer
- 16-Bit Synchronous Counter
- 16-Bit Asynchronous Counter

Timer1 also supports these features:

- Timer Gate Operation
- Selectable Prescaler Settings
- Timer Operation during CPU Idle and Sleep modes
- Interrupt on 16-Bit Period Register Match or Falling Edge of External Gate Signal

Figure 11-1 presents a block diagram of the 16-bit Timer1 module.

To configure Timer1 for operation:

1. Set the TON bit (= 1).
2. Select the timer prescaler ratio using the TCKPS<1:0> bits.
3. Set the Clock and Gating modes using the TCS and TGATE bits.
4. Set or clear the TSYNC bit to configure synchronous or asynchronous operation.
5. Load the timer period value into the PR1 register.
6. If interrupts are required, set the interrupt enable bit, T1IE. Use the priority bits, T1IP<2:0>, to set the interrupt priority.

FIGURE 11-1: 16-BIT TIMER1 MODULE BLOCK DIAGRAM

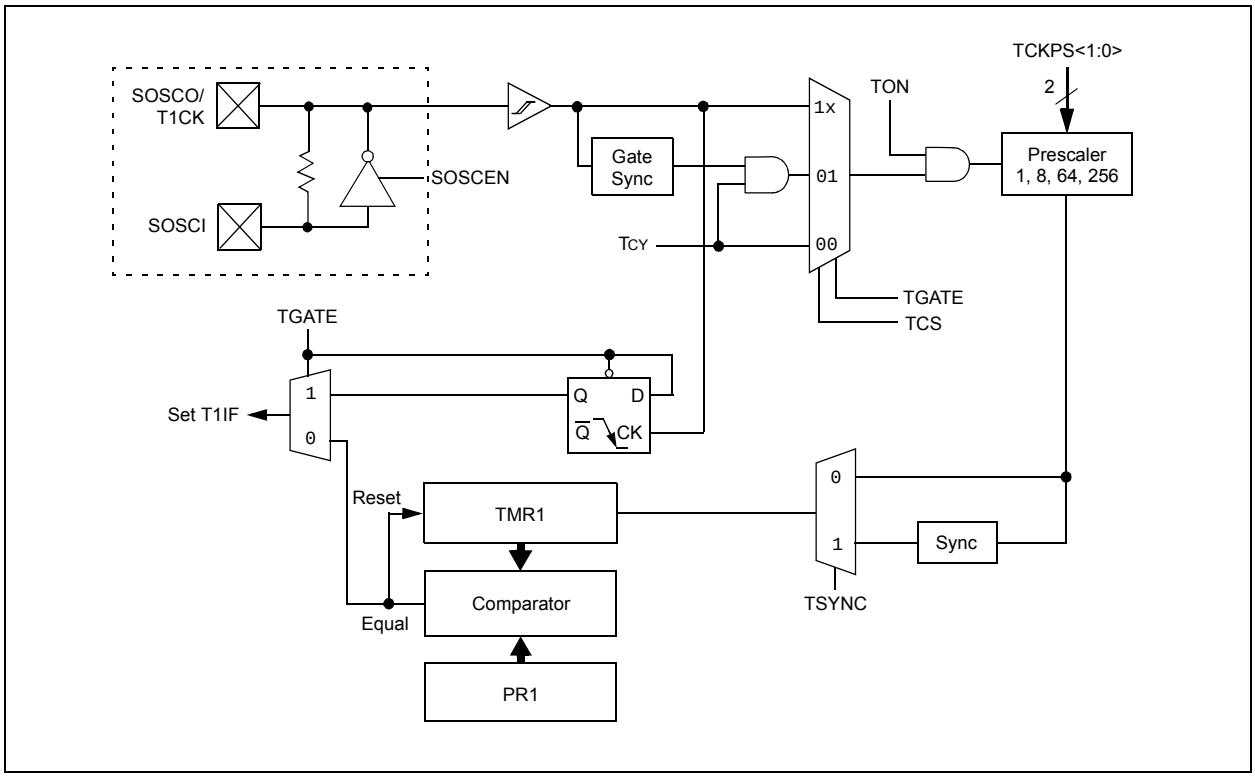

REGISTER 11-1: T1CON: TIMER1 CONTROL REGISTER

R/W-0	U-0	R/W-0	U-0	U-0	U-0	U-0	U-0
TON	—	TSIDL	—	—	—	—	—
bit 15							bit 8

U-0	R/W-0	R/W-0	R/W-0	U-0	R/W-0	R/W-0	U-0
—	TGATE	TCKPS1	TCKPS0	—	TSYNC	TCS	—
bit 7							bit 0

Legend:			
R = Readable bit	W = Writable bit	U = Unimplemented bit, read as ‘0’	
-n = Value at POR	‘1’ = Bit is set	‘0’ = Bit is cleared	x = Bit is unknown

bit 15 **TON:** Timer1 On bit
`1` = Starts 16-bit Timer1
`0` = Stops 16-bit Timer1

bit 14 **Unimplemented:** Read as ‘`0`’

bit 13 **TSIDL:** Stop in Idle Mode bit
`1` = Discontinue module operation when device enters Idle mode
`0` = Continue module operation in Idle mode

bit 12-7 **Unimplemented:** Read as ‘`0`’

bit 6 **TGATE:** Timer1 Gated Time Accumulation Enable bit
When TCS = `1`:
This bit is ignored.
When TCS = `0`:
`1` = Gated time accumulation enabled
`0` = Gated time accumulation disabled

bit 5-4 **TCKPS<1:0>:** Timer1 Input Clock Prescale Select bits
`11` = 1:256
`10` = 1:64
`01` = 1:8
`00` = 1:1

bit 3 **Unimplemented:** Read as ‘`0`’

bit 2 **TSYNC:** Timer1 External Clock Input Synchronization Select bit
When TCS = `1`:
`1` = Synchronize external clock input
`0` = Do not synchronize external clock input
When TCS = `0`:
This bit is ignored.

bit 1 **TCS:** Timer1 Clock Source Select bit
`1` = External clock from T1CK pin (on the rising edge)
`0` = Internal clock (FOSC/2)

bit 0 **Unimplemented:** Read as ‘`0`’

 © 2009 Microchip Technology Inc.

12.0 TIMER2/3

Note:	This data sheet summarizes the features of this group of PIC24F devices. It is not intended to be a comprehensive reference source. For more information on Timers, refer to the *"PIC24F Family Reference Manual"*, **Section 14. "Timers"** (DS39704).

The Timer2/3 module is a 32-bit timer, which can also be configured as two independent 16-bit timers with selectable operating modes.

As a 32-bit timer, Timer2/3 operates in three modes:

- Two independent 16-bit timers (Timer2 and Timer3) with all 16-bit operating modes (except Asynchronous Counter mode)
- Single 32-bit timer
- Single 32-bit synchronous counter

They also support these features:

- Timer gate operation
- Selectable prescaler settings
- Timer operation during Idle and Sleep modes
- Interrupt on a 32-bit Period register match
- ADC Event Trigger

Individually, both of the 16-bit timers can function as synchronous timers or counters. They also offer the features listed above, except for the ADC event trigger (this is implemented only with Timer3). The operating modes and enabled features are determined by setting the appropriate bit(s) in the T2CON and T3CON registers. T2CON and T3CON are provided in generic form in Register 12-1 and Register 12-2, respectively.

For 32-bit timer/counter operation, Timer2 is the least significant word (lsw) and Timer3 is the most significant word (msw) of the 32-bit timer.

Note:	For 32-bit operation, T3CON control bits are ignored. Only T2CON control bits are used for setup and control. Timer2 clock and gate inputs are utilized for the 32-bit timer modules, but an interrupt is generated with the Timer3 interrupt flags.

To configure Timer2/3 for 32-bit operation:

1. Set the T32 bit (T2CON<3> = 1).
2. Select the prescaler ratio for Timer2 using the TCKPS<1:0> bits.
3. Set the Clock and Gating modes using the TCS and TGATE bits.
4. Load the timer period value. PR3 will contain the msw of the value while PR2 contains the lsw.
5. If interrupts are required, set the interrupt enable bit, T3IE; use the priority bits, T3IP<2:0>, to set the interrupt priority.

   While Timer2 controls the timer, the interrupt appears as a Timer3 interrupt.
6. Set the TON bit (= 1).

The timer value, at any point, is stored in the register pair, TMR<3:2>. TMR3 always contains the msw of the count, while TMR2 contains the lsw.

To configure any of the timers for individual 16-bit operation:

1. Clear the T32 bit in T2CON<3>.
2. Select the timer prescaler ratio using the TCKPS<1:0> bits.
3. Set the Clock and Gating modes using the TCS and TGATE bits.
4. Load the timer period value into the PRx register.
5. If interrupts are required, set the interrupt enable bit, TxIE; use the priority bits, TxIP<2:0>, to set the interrupt priority.
6. Set the TON bit (TxCON<15> = 1).

FIGURE 12-1: TIMER2/3 (32-BIT) BLOCK DIAGRAM

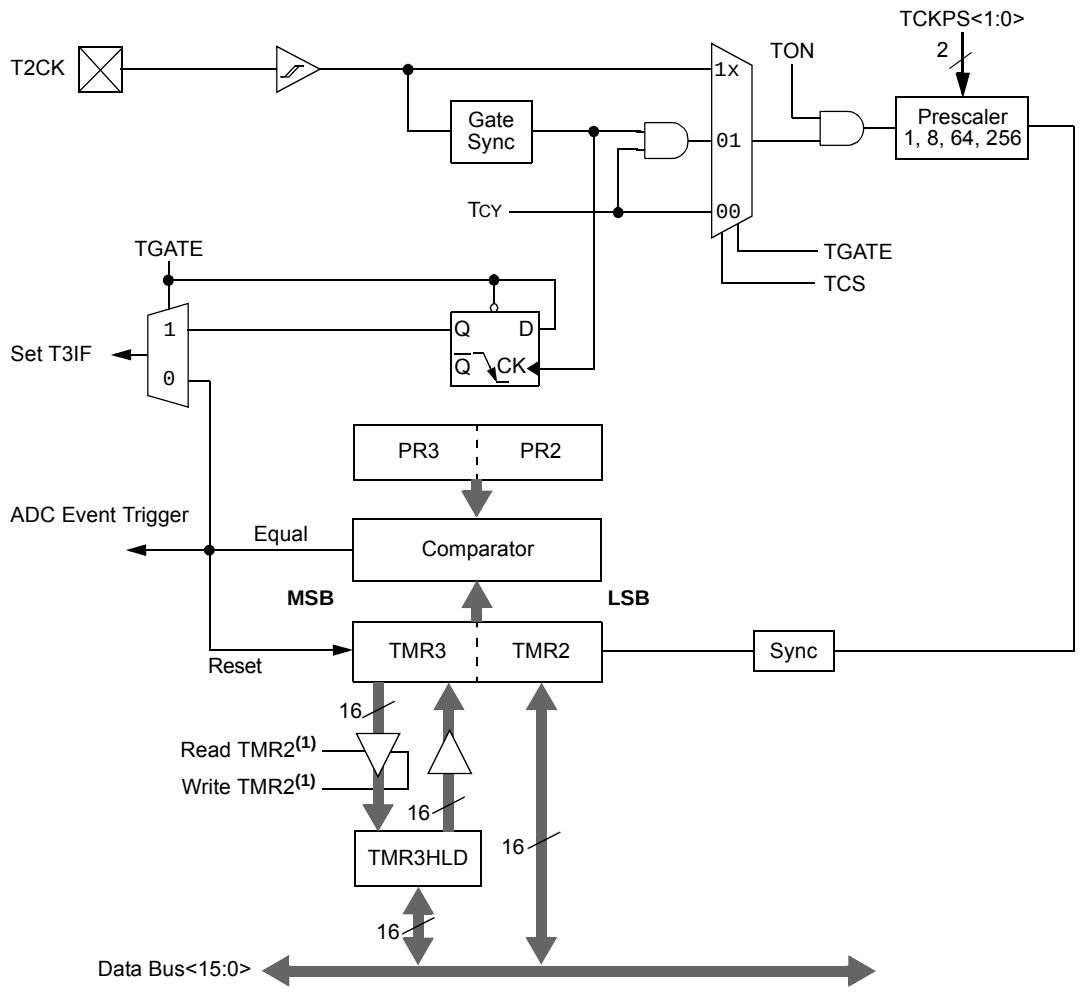

Note 1: The 32-Bit Timer Configuration (T32) bit must be set for 32-bit timer/counter operation. All control bits are respective to the T2CON register.

 © 2009 Microchip Technology Inc.

FIGURE 12-2: TIMER2 (16-BIT SYNCHRONOUS) BLOCK DIAGRAM

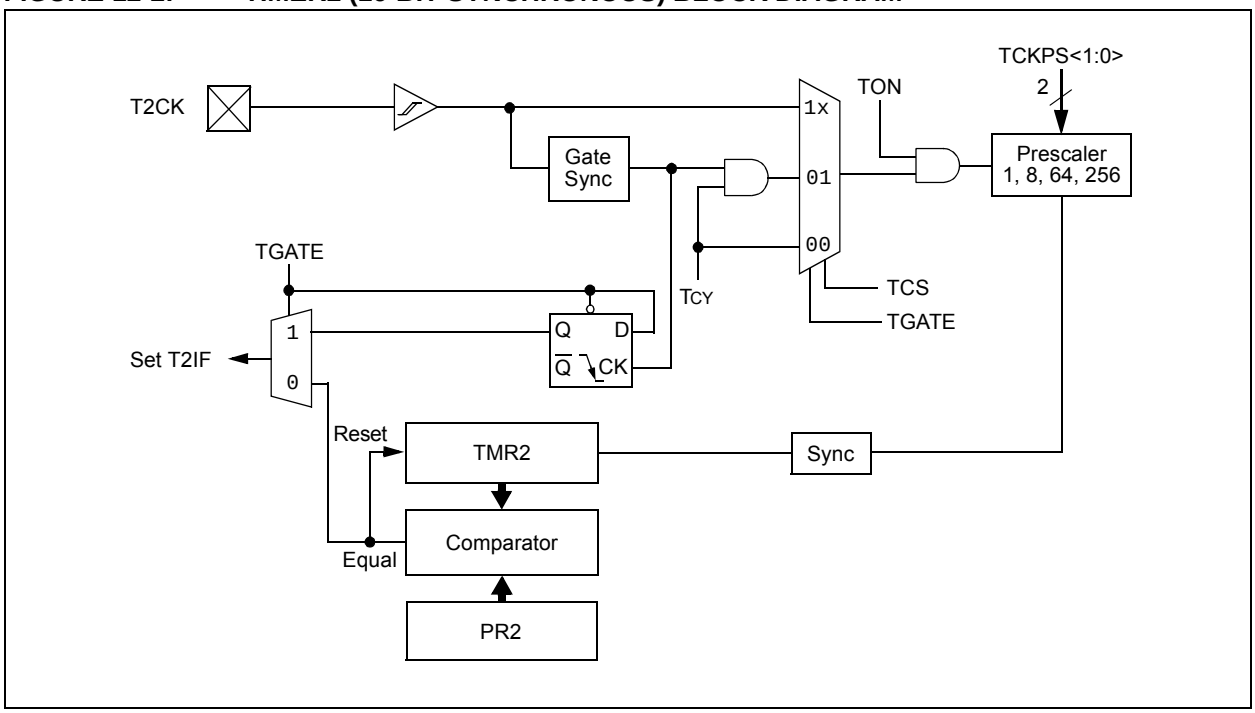

FIGURE 12-3: TIMER3 (16-BIT SYNCHRONOUS) BLOCK DIAGRAM

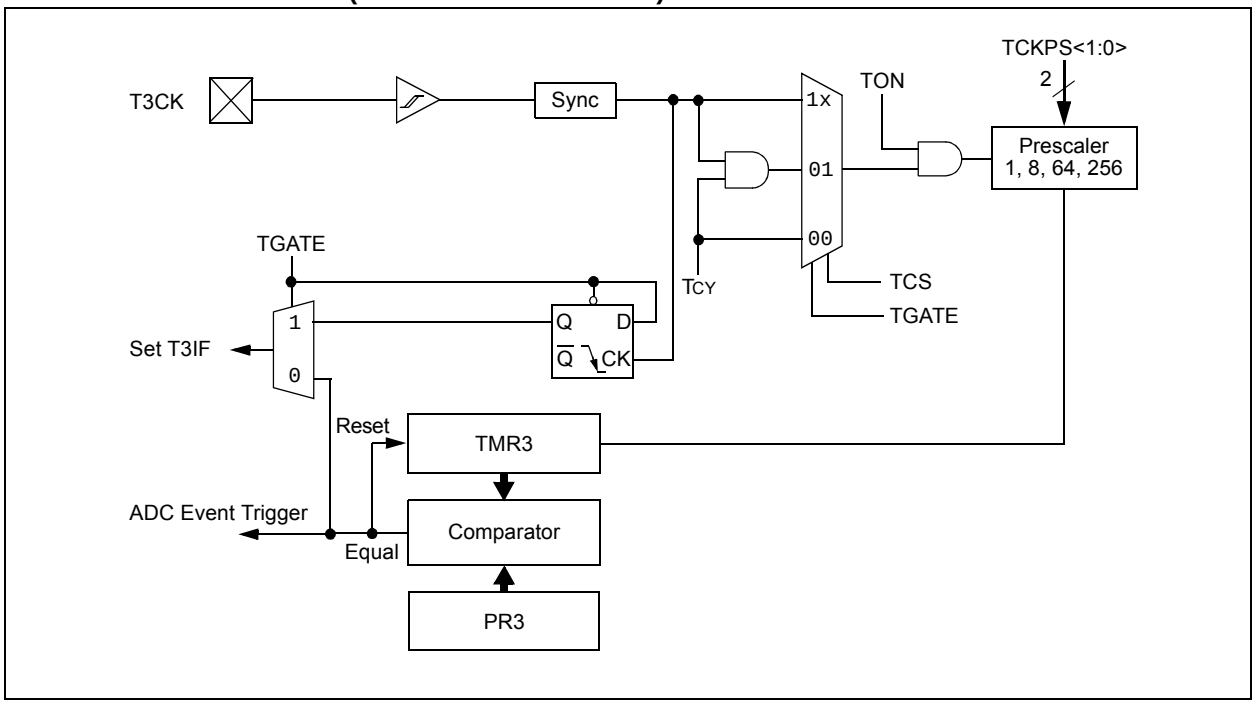

REGISTER 12-1: T2CON: TIMER2 CONTROL REGISTER

R/W-0	U-0	R/W-0	U-0	U-0	U-0	U-0	U-0
TON	—	TSIDL	—	—	—	—	—
bit 15							bit 8

U-0	R/W-0	R/W-0	R/W-0	R/W-0	U-0	R/W-0	U-0
—	TGATE	TCKPS1	TCKPS0	T32(1)	—	TCS	—
bit 7							bit 0

Legend:			
R = Readable bit	W = Writable bit	U = Unimplemented bit, read as ‘0’	
-n = Value at POR	‘1’ = Bit is set	‘0’ = Bit is cleared	x = Bit is unknown

bit 15 **TON:** Timer2 On bit
When T2CON<3> = 1:
1 = Starts 32-bit Timer2/3
0 = Stops 32-bit Timer2/3
When T2CON<3> = 0:
1 = Starts 16-bit Timer2
0 = Stops 16-bit Timer2

bit 14 **Unimplemented:** Read as ‘0’

bit 13 **TSIDL:** Stop in Idle Mode bit
1 = Discontinue module operation when device enters Idle mode
0 = Continue module operation in Idle mode

bit 12-7 **Unimplemented:** Read as ‘0’

bit 6 **TGATE:** Timer2 Gated Time Accumulation Enable bit
When TCS = 1:
This bit is ignored.
When TCS = 0:
1 = Gated time accumulation enabled
0 = Gated time accumulation disabled

bit 5-4 **TCKPS<1:0>:** Timer2 Input Clock Prescale Select bits
11 = 1:256
10 = 1:64
01 = 1:8
00 = 1:1

bit 3 **T32:** 32-Bit Timer Mode Select bit(1)
1 = Timer2 and Timer3 form a single 32-bit timer
0 = Timer2 and Timer3 act as two 16-bit timers

bit 2 **Unimplemented:** Read as ‘0’

bit 1 **TCS:** Timer2 Clock Source Select bit
1 = External clock from pin, T2CK (on the rising edge)
0 = Internal clock (FOSC/2)

bit 0 **Unimplemented:** Read as ‘0’

Note 1: In 32-bit mode, the T3CON control bits do not affect 32-bit timer operation.

 © 2009 Microchip Technology Inc.

REGISTER 12-2: T3CON: TIMER3 CONTROL REGISTER

R/W-0	U-0	R/W-0	U-0	U-0	U-0	U-0	U-0
TON(1)	—	TSIDL(1)	—	—	—	—	—
bit 15							bit 8

U-0	R/W-0	R/W-0	R/W-0	U-0	U-0	R/W-0	U-0
—	TGATE(1)	TCKPS1(1)	TCKPS0(1)	—	—	TCS(1)	—
bit 7							bit 0

Legend:			
R = Readable bit	W = Writable bit	U = Unimplemented bit, read as ‘0’	
-n = Value at POR	‘1’ = Bit is set	‘0’ = Bit is cleared	x = Bit is unknown

bit 15 **TON:** Timer3 On bit(1)
1 = Starts 16-bit Timer3
0 = Stops 16-bit Timer3

bit 14 **Unimplemented:** Read as ‘0’

bit 13 **TSIDL:** Stop in Idle Mode bit(1)
1 = Discontinue module operation when device enters Idle mode
0 = Continue module operation in Idle mode

bit 12-7 **Unimplemented:** Read as ‘0’

bit 6 **TGATE:** Timer3 Gated Time Accumulation Enable bit(1)
When TCS = 1:
This bit is ignored.
When TCS = 0:
1 = Gated time accumulation enabled
0 = Gated time accumulation disabled

bit 5-4 **TCKPS<1:0>:** Timer3 Input Clock Prescale Select bits(1)
11 = 1:256
10 = 1:64
01 = 1:8
00 = 1:1

bit 3-2 **Unimplemented:** Read as ‘0’

bit 1 **TCS:** Timer3 Clock Source Select bit(1)
1 = External clock from the T3CK pin (on the rising edge)
0 = Internal clock (FOSC/2)

bit 0 **Unimplemented:** Read as ‘0’

Note 1: When 32-bit operation is enabled (T2CON<3> = 1), these bits have no effect on Timer3 operation; all timer functions are set through T2CON.

NOTES:

 © 2009 Microchip Technology Inc.

13.0 INPUT CAPTURE

Note:	This data sheet summarizes the features of this group of PIC24F devices. It is not intended to be a comprehensive reference source. For more information on Input Capture, refer to the *"PIC24F Family Reference Manual"*, **Section 15. "Input Capture"** (DS39701).

The input capture module is used to capture a timer value from one of two selectable time bases upon an event on an input pin.

The input capture features are quite useful in applications requiring frequency (Time Period) and pulse measurement. Figure 13-1 depicts a simplified block diagram of the input capture module.

The PIC24F04KA201 family devices have one input capture channel. The input capture module has multiple operating modes, which are selected via the IC1CON register. The operating modes include:

- Capture timer value on every falling edge of input applied at the IC1 pin
- Capture timer value on every rising edge of input applied at the IC1 pin
- Capture timer value on every 4th rising edge of input applied at the IC1 pin
- Capture timer value on every 16th rising edge of input applied at the IC1 pin
- Capture timer value on every rising and every falling edge of input applied at the IC1 pin
- Device wake-up from capture pin during CPU Sleep and Idle modes

The input capture module has a four-level FIFO buffer. The number of capture events required to generate a CPU interrupt can be selected by the user.

FIGURE 13-1: INPUT CAPTURE BLOCK DIAGRAM

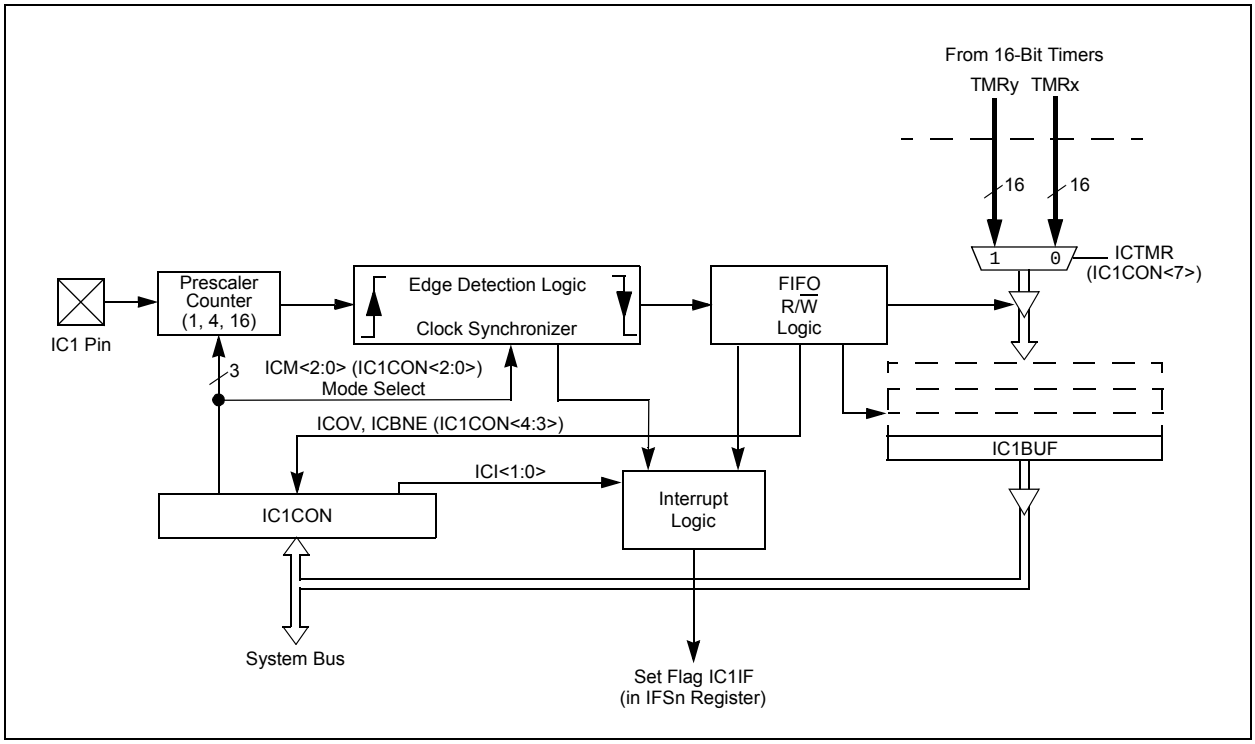

13.1 Input Capture Registers

REGISTER 13-1: IC1CON: INPUT CAPTURE 1 CONTROL REGISTER

U-0	U-0	R/W-0	U-0	U-0	U-0	U-0	U-0
—	—	ICSIDL	—	—	—	—	—
bit 15							bit 8

R/W-0	R/W-0	R/W-0	R-0, HC	R-0, HC	R/W-0	R/W-0	R/W-0
ICTMR	ICI1	ICI0	ICOV	ICBNE	ICM2	ICM1	ICM0
bit 7							bit 0

Legend:	HC = Hardware Clearable bit		
R = Readable bit	W = Writable bit	U = Unimplemented bit, read as ‘0’	
-n = Value at POR	‘1’ = Bit is set	‘0’ = Bit is cleared	x = Bit is unknown

bit 15-14 **Unimplemented:** Read as ‘0’

bit 13 **ICSIDL:** Input Capture 1 Module Stop in Idle Control bit
1 = Input capture module will halt in CPU Idle mode
0 = Input capture module will continue to operate in CPU Idle mode

bit 12-8 **Unimplemented:** Read as ‘0’

bit 7 **ICTMR:** Input Capture 1 Timer Select bit
1 = TMR2 contents are captured on capture event
0 = TMR3 contents are captured on capture event

bit 6-5 **ICI<1:0>:** Select Number of Captures per Interrupt bits
11 = Interrupt on every fourth capture event
10 = Interrupt on every third capture event
01 = Interrupt on every second capture event
00 = Interrupt on every capture event

bit 4 **ICOV:** Input Capture 1 Overflow Status Flag bit (read-only)
1 = Input capture overflow occurred
0 = No input capture overflow occurred

bit 3 **ICBNE:** Input Capture 1 Buffer Empty Status bit (read-only)
1 = Input capture buffer is not empty, at least one more capture value can be read
0 = Input capture buffer is empty

bit 2-0 **ICM<2:0>:** Input Capture 1 Mode Select bits
111 = Input capture functions as interrupt pin only when device is in Sleep or Idle mode (rising edge detect only, all other control bits are not applicable)
110 = Unused (module disabled)
101 = Capture mode, every 16th rising edge
100 = Capture mode, every 4th rising edge
011 = Capture mode, every rising edge
010 = Capture mode, every falling edge
001 = Capture mode, every edge (rising and falling) – ICI<1:0> bits do not control interrupt generation for this mode
000 = Input capture module turned off

 © 2009 Microchip Technology Inc.

14.0 OUTPUT COMPARE

Note:	This data sheet summarizes the features of this group of PIC24F devices. It is not intended to be a comprehensive reference source. For more information on Output Compare, refer to the *"PIC24F Family Reference Manual"*, **Section 16. "Output Compare"** (DS39706).

14.1 Setup for Single Output Pulse Generation

When the OCM control bits (OC1CON<2:0>) are set to '100', the selected output compare channel initializes the OC1 pin to the low state and generates a single output pulse.

To generate a single output pulse, the following steps are required (these steps assume the timer source is initially turned off, but this is not a requirement for the module operation):

1. Determine the instruction clock cycle time. Take into account the frequency of the external clock to the timer source (if one is used) and the timer prescaler settings.
2. Calculate time to the rising edge of the output pulse relative to the TMRy start value (0000h).
3. Calculate the time to the falling edge of the pulse based on the desired pulse width and the time to the rising edge of the pulse.
4. Write the values computed in steps 2 and 3 above into the Output Compare 1 register, OC1R, and the Output Compare 1 Secondary register, OC1RS, respectively.
5. Set Timer Period register, PRy, to value equal to or greater than the value in OC1RS, the Output Compare 1 Secondary register.
6. Set the OCM bits to '100' and the OCTSEL (OC1CON<3>) bit to the desired timer source. The OC1 pin state will now be driven low.
7. Set the TON (TyCON<15>) bit to '1', which enables the compare time base to count.
8. Upon the first match between TMRy and OC1R, the OC1 pin will be driven high.
9. When the incrementing timer, TMRy, matches the Output Compare 1 Secondary register, OC1RS, the second and trailing edge (high-to-low) of the pulse is driven onto the OC1 pin. No additional pulses are driven onto the OC1 pin and it remains low. As a result of the second compare match event, the OC1IF interrupt flag bit is set, which will result in an interrupt if it is enabled, by setting the OC1IE bit. For further information on peripheral interrupts, refer to **Section 7.0 "Interrupt Controller"**.
10. To initiate another single pulse output, change the Timer and Compare register settings, if needed, and then issue a write to set the OCM bits to '100'. Disabling and re-enabling of the timer and clearing the TMRy register are not required, but may be advantageous for defining a pulse from a known event time boundary.

The output compare module does not have to be disabled after the falling edge of the output pulse. Another pulse can be initiated by rewriting the value of the OC1CON register.

14.2 Setup for Continuous Output Pulse Generation

When the OCM control bits (OC1CON<2:0>) are set to '101', the selected output compare channel initializes the OC1 pin to the low state and generates output pulses on each and every compare match event.

For the user to configure the module for the generation of a continuous stream of output pulses, the following steps are required (these steps assume the timer source is initially turned off, but this is not a requirement for the module operation):

1. Determine the instruction clock cycle time. Take into account the frequency of the external clock to the timer source (if one is used) and the timer prescaler settings.
2. Calculate time to the rising edge of the output pulse relative to the TMRy start value (0000h).
3. Calculate the time to the falling edge of the pulse based on the desired pulse width and the time to the rising edge of the pulse.
4. Write the values computed in step 2 and 3 above into the Output Compare 1 register, OC1R, and the Output Compare 1 Secondary register, OC1RS, respectively.
5. Set the Timer Period register, PRy, to a value equal to or greater than the value in OC1RS.
6. Set the OCM bits to '101' and the OCTSEL bit to the desired timer source. The OC1 pin state will now be driven low.
7. Enable the compare time base by setting the TON (TyCON<15>) bit to '1'.
8. Upon the first match between TMRy and OC1R, the OC1 pin will be driven high.
9. When the compare time base, TMRy, matches the OC1RS, the second and trailing edge (high-to-low) of the pulse is driven onto the OC1 pin.
10. As a result of the second compare match event, the OC1IF interrupt flag bit is set.
11. When the compare time base and the value in its respective Timer Period register match, the TMRy register resets to 0x0000 and resumes counting.
12. Steps 8 through 11 are repeated and a continuous stream of pulses is generated indefinitely. The OC1IF flag is set on each OC1RS/TMRy compare match event.

14.3 Pulse-Width Modulation (PWM) Mode

The following steps should be taken when configuring the output compare module for PWM operation:

1. Set the PWM period by writing to the selected Timer Period register (PRy).
2. Set the PWM duty cycle by writing to the OC1RS register.
3. Write the OC1R register with the initial duty cycle.
4. Enable interrupts, if required, for the timer and output compare modules. The output compare interrupt is required for PWM Fault pin utilization.
5. Configure the output compare module for one of two PWM Operation modes by writing to the Output Compare Mode bits, OCM<2:0> (OC1CON<2:0>).
6. Set the TMRy prescale value and enable the time base by setting TON (TxCON<15>) = 1.

Note: The OC1R register should be initialized before the output compare module is first enabled. The OC1R register becomes a read-only Duty Cycle register when the module is operated in the PWM modes. The value held in OC1R will become the PWM duty cycle for the first PWM period. The contents of the Output Compare 1 Secondary register, OC1RS, will not be transferred into OC1R until a time base period match occurs.

14.3.1 PWM PERIOD

The PWM period is specified by writing to PRy, the Timer Period register. The PWM period can be calculated using Equation 14-1.

EQUATION 14-1: CALCULATING THE PWM PERIOD(1)

PWM Period = [(PRy) + 1] • TCY • (Timer Prescale Value)

where:

PWM Frequency = 1/[PWM Period]

Note 1: Based on TCY = 2 * TOSC, Doze mode and PLL are disabled.

Note: A PRy value of N will produce a PWM period of N + 1 time base count cycles. For example, a value of 7 written into the PRy register will yield a period consisting of 8 time base cycles.

14.3.2 PWM DUTY CYCLE

The PWM duty cycle is specified by writing to the OC1RS register. The OC1RS register can be written to at any time, but the duty cycle value is not latched into OC1R until a match between PRy and TMRy occurs (i.e., the period is complete). This provides a double buffer for the PWM duty cycle and is essential for glitchless PWM operation. In PWM mode, OC1R is a read-only register.

Some important boundary parameters of the PWM duty cycle include:

- If the Output Compare 1 register, OC1R, is loaded with 0000h, the OC1 pin will remain low (0% duty cycle).
- If OC1R is greater than PRy (Timer Period register), the pin will remain high (100% duty cycle).
- If OC1R is equal to PRy, the OC1 pin will be low for one time base count value and high for all other count values.

See Example 14-1 for PWM mode timing details. Table 14-1 provides an example of PWM frequencies and resolutions for a device operating at 10 MIPS.

EQUATION 14-2: CALCULATION FOR MAXIMUM PWM RESOLUTION(1)

$$\text{Maximum PWM Resolution (bits)} = \frac{\log_{10}\left(\frac{F_{CY}}{F_{PWM} \bullet (\text{Timer Prescale Value})}\right)}{\log_{10}(2)} \text{ bits}$$

Note 1: Based on FCY = FOSC/2, Doze mode and PLL are disabled.

 © 2009 Microchip Technology Inc.

EXAMPLE 14-1: PWM PERIOD AND DUTY CYCLE CALCULATIONS(1)

1. Find the Timer Period register value for a desired PWM frequency of 52.08 kHz, where FOSC = 8 MHz with PLL (32 MHz device clock rate) and a Timer2 prescaler setting of 1:1.

   TCY = 2 * TOSC = 62.5 ns

   PWM Period = 1/PWM Frequency = 1/52.08 kHz = 19.2 μs

   PWM Period = (PR2 + 1) • TCY • (Timer 2 Prescale Value)

   19.2 μs = (PR2 + 1) • 62.5 ns • 1

   PR2 = 306

2. Find the maximum resolution of the duty cycle that can be used with a 52.08 kHz frequency and a 32 MHz device clock rate:

   PWM Resolution = $\log_{10}(F_{CY}/F_{PWM})/\log_{10}2)$ bits

   = $(\log_{10}(16\text{ MHz}/52.08\text{ kHz})/\log_{10}2)$ bits

   = 8.3 bits

Note 1: Based on TCY = 2 * TOSC, Doze mode and PLL are disabled.

TABLE 14-1: EXAMPLE PWM FREQUENCIES AND RESOLUTIONS AT 4 MIPS (FCY = 4 MHz)(1)

PWM Frequency	7.6 Hz	61 Hz	122 Hz	977 Hz	3.9 kHz	31.3 kHz	125 kHz
Timer Prescaler Ratio	8	1	1	1	1	1	1
Period Register Value	FFFFh	FFFFh	7FFFh	0FFFh	03FFh	007Fh	001Fh
Resolution (bits)	16	16	15	12	10	7	5

Note 1: Based on FCY = FOSC/2, Doze mode and PLL are disabled.

TABLE 14-2: EXAMPLE PWM FREQUENCIES AND RESOLUTIONS AT 16 MIPS (FCY = 16 MHz)(1)

PWM Frequency	30.5 Hz	244 Hz	488 Hz	3.9 kHz	15.6 kHz	125 kHz	500 kHz
Timer Prescaler Ratio	8	1	1	1	1	1	1
Period Register Value	FFFFh	FFFFh	7FFFh	0FFFh	03FFh	007Fh	001Fh
Resolution (bits)	16	16	15	12	10	7	5

Note 1: Based on FCY = FOSC/2, Doze mode and PLL are disabled.

FIGURE 14-1: OUTPUT COMPARE MODULE BLOCK DIAGRAM

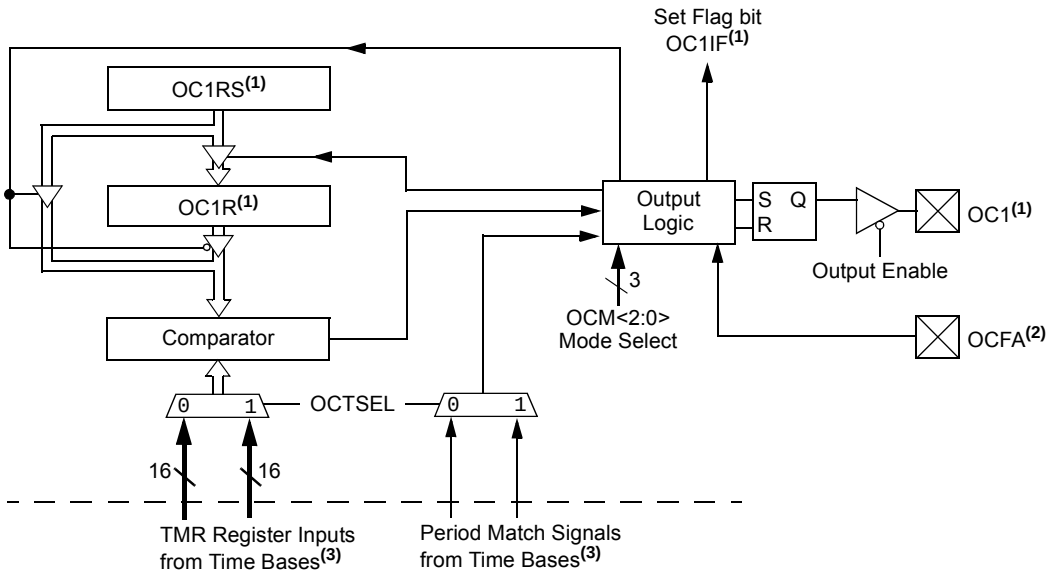

Note 1: Where 'x' is depicted, reference is made to the registers associated with the respective Output Compare Channel 1.
2: OCFA pin controls OC1 channel.
3: Each output compare channel can use one of two selectable time bases. Refer to the device data sheet for the time bases associated with the module.

 © 2009 Microchip Technology Inc.

14.4 Output Compare Register

REGISTER 14-1: OC1CON: OUTPUT COMPARE 1 CONTROL REGISTER

U-0	U-0	R/W-0	U-0	U-0	U-0	U-0	U-0
—	—	OCSIDL	—	—	—	—	—
bit 15							bit 8

U-0	U-0	U-0	R-0, HC	R/W-0	R/W-0	R/W-0	R/W-0
—	—	—	OCFLT	OCTSEL	OCM2	OCM1	OCM0
bit 7							bit 0

Legend:	HC = Hardware Clearable bit		
R = Readable bit	W = Writable bit	U = Unimplemented bit, read as ‘0’	
-n = Value at POR	‘1’ = Bit is set	‘0’ = Bit is cleared	x = Bit is unknown

bit 15-14 **Unimplemented:** Read as ‘0’

bit 13 **OCSIDL:** Stop Output Compare 1 in Idle Mode Control bit
1 = Output Compare 1 will halt in CPU Idle mode
0 = Output Compare 1 will continue to operate in CPU Idle mode

bit 12-5 **Unimplemented:** Read as ‘0’

bit 4 **OCFLT:** PWM Fault Condition Status bit
1 = PWM Fault condition has occurred (cleared in HW only)
0 = No PWM Fault condition has occurred (this bit is only used when OCM<2:0> = 111)

bit 3 **OCTSEL:** Output Compare 1 Timer Select bit
1 = Timer3 is the clock source for Output Compare 1
0 = Timer2 is the clock source for Output Compare 1
Refer to the device data sheet for specific time bases available to the output compare module.

bit 2-0 **OCM<2:0>:** Output Compare 1 Mode Select bits
111 = PWM mode on OC1, Fault pin; OFCA enabled(1)
110 = PWM mode on OC1, Fault pin; OFCA disabled(1)
101 = Initialize OC1 pin low, generate continuous output pulses on OC1 pin
100 = Initialize OC1 pin low, generate single output pulse on OC1 pin
011 = Compare event toggles OC1 pin
010 = Initialize OC1 pin high, compare event forces OC1 pin low
001 = Initialize OC1 pin low, compare event forces OC1 pin high
000 = Output compare channel is disabled

Note 1: OCFA pin controls OC1 channel.

REGISTER 14-2: PADCFG1: PAD CONFIGURATION CONTROL REGISTER

U-0	U-0	U-0	U-0	U-0	U-0	U-0	U-0
—	—	—	—	—	—	—	—
bit 15							bit 8

U-0	U-0	U-0	R/W-0	R/W-0	U-0	U-0	R/W-0
—	—	—	SMBUSDEL(2)	OC1TRIS(1)	—	—	—
bit 7							bit 0

Legend:			
R = Readable bit	W = Writable bit	U = Unimplemented bit, read as ‘0’	
-n = Value at POR	‘1’ = Bit is set	‘0’ = Bit is cleared	x = Bit is unknown

bit 15-5 **Unimplemented:** Read as ‘0’

bit 3 **OC1TRIS:** OC1 Output Tri-State Select bit(1)
1 = OC1 output will not be active on the pin; OCPWM1 can still be used for internal triggers
0 = OC1 output will be active on the pin based on the OCPWM1 module settings

bit 2-0 **Unimplemented:** Read as ‘0’

Note 1: To enable the actual OC1 output, the OCPWM1 module has to be enabled.
2: Bit 4 is described in **Section 16.0 “Inter-Integrated Circuit (I^2C™)”**.

 © 2009 Microchip Technology Inc.

15.0 SERIAL PERIPHERAL INTERFACE (SPI)

Note:	This data sheet summarizes the features of this group of PIC24F devices. It is not intended to be a comprehensive reference source. For more information on the Serial Peripheral Interface, refer to the *"PIC24F Family Reference Manual"*, **Section 23. "Serial Peripheral Interface (SPI)"** (DS39699).

The Serial Peripheral Interface (SPI) module is a synchronous serial interface useful for communicating with other peripheral or microcontroller devices. These peripheral devices may be serial data EEPROMs, shift registers, display drivers, A/D Converters, etc. The SPI module is compatible with Motorola's SPI and SIOP interfaces.

The module supports operation in two buffer modes. In Standard mode, data is shifted through a single serial buffer. In Enhanced Buffer mode, data is shifted through an 8-level FIFO buffer.

Note:	Do not perform read-modify-write operations (such as bit-oriented instructions) on the SPI1BUF register in either Standard or Enhanced Buffer mode.

The module also supports a basic framed SPI protocol while operating in either Master or Slave mode. A total of four framed SPI configurations are supported.

The SPI serial interface consists of four pins:

- SDI1: Serial Data Input
- SDO1: Serial Data Output
- SCK1: Shift Clock Input or Output
- $\overline{\text{SS1}}$: Active-Low Slave Select or Frame Synchronization I/O Pulse

The SPI module can be configured to operate using 2, 3 or 4 pins. In the 3-pin mode, $\overline{\text{SS1}}$ is not used. In the 2-pin mode, both SDO1 and $\overline{\text{SS1}}$ are not used.

Block diagrams of the module in Standard and Enhanced Buffer modes are displayed in Figure 15-1 and Figure 15-2.

The devices of the PIC24F04KA201 family offer one SPI module on a device.

Note:	In this section, the SPI module is referred to as SPI1, or separately as SPI1. Special Function Registers (SFRs) will follow a similar notation. For example, SPI1CON1 or SPI1CON2 refers to the control register for the SPI1 module.

To set up the SPI module for the Standard Master mode of operation:

1. If using interrupts:
   a) Clear the respective SPI1IF bit in the IFS0 register.
   b) Set the respective SPI1IE bit in the IEC0 register.
   c) Write the respective SPI1IPx bits in the IPC2 register to set the interrupt priority.
2. Write the desired settings to the SPI1CON1 and SPI1CON2 registers with the MSTEN bit (SPI1CON1<5>) = 1.
3. Clear the SPIROV bit (SPI1STAT<6>).
4. Enable SPI operation by setting the SPIEN bit (SPI1STAT<15>).
5. Write the data to be transmitted to the SPI1BUF register. Transmission (and reception) will start as soon as data is written to the SPI1BUF register.

To set up the SPI module for the Standard Slave mode of operation:

1. Clear the SPI1BUF register.
2. If using interrupts:
   a) Clear the respective SPI1IF bit in the IFS0 register.
   b) Set the respective SPI1IE bit in the IEC0 register.
   c) Write the respective SPI1IP bits in the IPC2 register to set the interrupt priority.
3. Write the desired settings to the SPI1CON1 and SPI1CON2 registers with the MSTEN bit (SPI1CON1<5>) = 0.
4. Clear the SMP bit.
5. If the CKE bit is set, then the SSEN bit (SPI1CON1<7>) must be set to enable the $\overline{\text{SS1}}$ pin.
6. Clear the SPIROV bit (SPI1STAT<6>).
7. Enable SPI operation by setting the SPIEN bit (SPI1STAT<15>).

FIGURE 15-1: SPI1 MODULE BLOCK DIAGRAM (STANDARD BUFFER MODE)

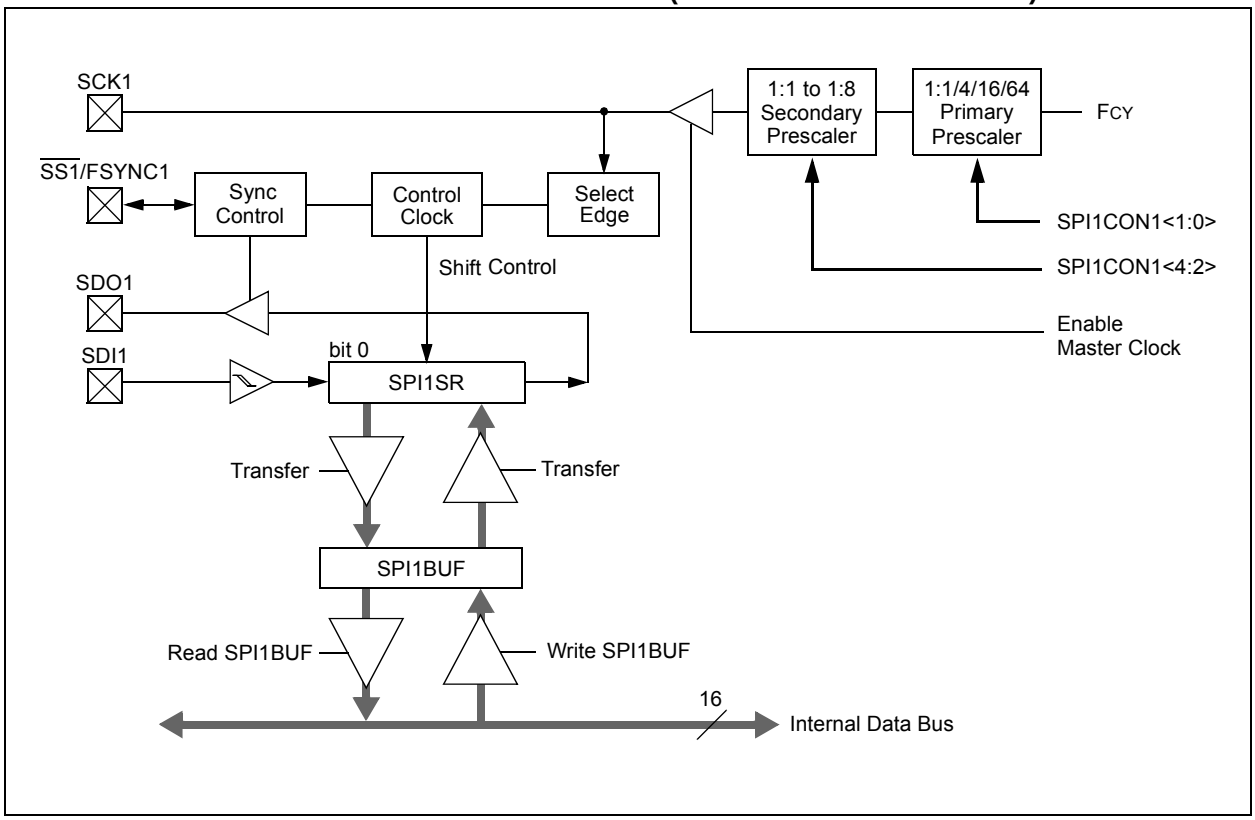

 © 2009 Microchip Technology Inc.

To set up the SPI module for the Enhanced Buffer Master (EBM) mode of operation:

1. If using interrupts:
   a) Clear the respective SPI1IF bit in the IFS0 register.
   b) Set the respective SPI1IE bit in the IEC0 register.
   c) Write the respective SPI1IPx bits in the IPC2 register.
2. Write the desired settings to the SPI1CON1 and SPI1CON2 registers with the MSTEN bit (SPI1CON1<5>) = 1.
3. Clear the SPIROV bit (SPI1STAT<6>).
4. Select Enhanced Buffer mode by setting the SPIBEN bit (SPI1CON2<0>).
5. Enable SPI operation by setting the SPIEN bit (SPI1STAT<15>).
6. Write the data to be transmitted to the SPI1BUF register. Transmission (and reception) will start as soon as data is written to the SPI1BUF register.

To set up the SPI module for the Enhanced Buffer Slave mode of operation:

1. Clear the SPI1BUF register.
2. If using interrupts:
   a) Clear the respective SPI1IF bit in the IFS0 register.
   b) Set the respective SPI1IE bit in the IEC0 register.
   c) Write the respective SPI1IPx bits in the IPC2 register to set the interrupt priority.
3. Write the desired settings to the SPI1CON1 and SPI1CON2 registers with the MSTEN bit (SPI1CON1<5>) = 0.
4. Clear the SMP bit.
5. If the CKE bit is set, then the SSEN bit must be set, thus enabling the $\overline{SS1}$ pin.
6. Clear the SPIROV bit (SPI1STAT<6>).
7. Select Enhanced Buffer mode by setting the SPIBEN bit (SPI1CON2<0>).
8. Enable SPI operation by setting the SPIEN bit (SPI1STAT<15>).

FIGURE 15-2: SPI1 MODULE BLOCK DIAGRAM (ENHANCED BUFFER MODE)

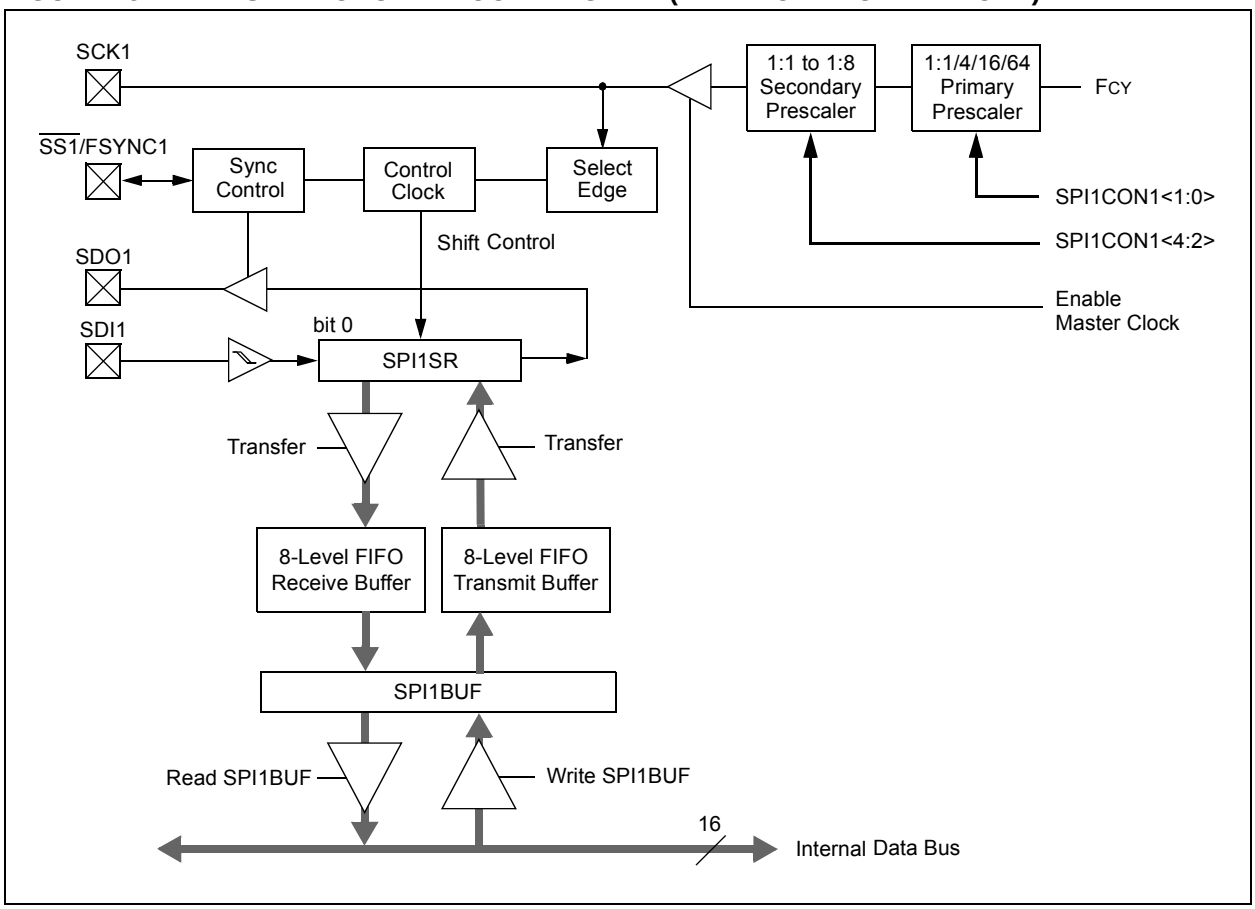

REGISTER 15-1: SPI1STAT: SPI1 STATUS AND CONTROL REGISTER

R/W-0	U-0	R/W-0	U-0	U-0	R-0, HSC	R-0, HSC	R-0, HSC
SPIEN	—	SPISIDL	—	—	SPIBEC2	SPIBEC1	SPIBEC0
bit 15							bit 8

R-0,HSC	R/C-0, HS	R/W-0, HSC	R/W-0	R/W-0	R/W-0	R-0, HSC	R-0, HSC
SRMPT	SPIROV	SRXMPT	SISEL2	SISEL1	SISEL0	SPITBF	SPIRBF
bit 7							bit 0

Legend:	HS = Hardware Settable bit	HSC = Hardware Settable/Clearable bit	C = Clearable bit
R = Readable bit	W = Writable bit	U = Unimplemented bit, read as ‘0’	
-n = Value at POR	‘1’ = Bit is set	‘0’ = Bit is cleared	x = Bit is unknown

bit 15 **SPIEN:** SPI1 Enable bit
`1` = Enables module and configures SCK1, SDO1, SDI1 and $\overline{SS1}$ as serial port pins
`0` = Disables module

bit 14 **Unimplemented:** Read as ‘`0`’

bit 13 **SPISIDL:** Stop in Idle Mode bit
`1` = Discontinues module operation when device enters Idle mode
`0` = Continues module operation in Idle mode

bit 12-11 **Unimplemented:** Read as ‘`0`’

bit 10-8 **SPIBEC<2:0>:** SPI1 Buffer Element Count bits (valid in Enhanced Buffer mode)
Master mode:
Number of SPI transfers pending.
Slave mode:
Number of SPI transfers unread.

bit 7 **SRMPT:** Shift Register (SPI1SR) Empty bit (valid in Enhanced Buffer mode)
`1` = SPI1 Shift register is empty and ready to send or receive
`0` = SPI1 Shift register is not empty

bit 6 **SPIROV:** Receive Overflow Flag bit
`1` = A new byte/word is completely received and discarded. The user software has not read the previous data in the SPI1BUF register.
`0` = No overflow has occurred

bit 5 **SRXMPT:** Receive FIFO Empty bit (valid in Enhanced Buffer mode)
`1` = Receive FIFO is empty
`0` = Receive FIFO is not empty

bit 4-2 **SISEL<2:0>:** SPI1 Buffer Interrupt Mode bits (valid in Enhanced Buffer mode)
`111` = Interrupt when SPI1 transmit buffer is full (SPITBF bit is set)
`110` = Interrupt when last bit is shifted into SPI1SR; as a result, the TX FIFO is empty
`101` = Interrupt when the last bit is shifted out of SPI1SR; now the transmit is complete
`100` = Interrupt when one data byte is shifted into the SPI1SR; as a result, the TX FIFO has one open spot
`011` = Interrupt when SPI1 receive buffer is full (SPIRBF bit set)
`010` = Interrupt when SPI1 receive buffer is 3/4 or more full
`001` = Interrupt when data is available in receive buffer (SRMPT bit is set)
`000` = Interrupt when the last data in the receive buffer is read; as a result, the buffer is empty (SRXMPT bit is set)

 © 2009 Microchip Technology Inc.

REGISTER 15-1: SPI1STAT: SPI1 STATUS AND CONTROL REGISTER (CONTINUED)

bit 1 **SPITBF:** SPI1 Transmit Buffer Full Status bit

1 = Transmit not yet started, SPI1TXB is full
0 = Transmit started, SPI1TXB is empty

In Standard Buffer mode:
Automatically set in hardware when CPU writes SPI1BUF location, loading SPI1TXB.
Automatically cleared in hardware when SPI1 module transfers data from SPI1TXB to SPI1SR.

In Enhanced Buffer mode:
Automatically set in hardware when CPU writes SPI1BUF location, loading the last available buffer location.
Automatically cleared in hardware when a buffer location is available for a CPU write.

bit 0 **SPIRBF:** SPI1 Receive Buffer Full Status bit

1 = Receive complete, SPI1RXB is full
0 = Receive is not complete, SPI1RXB is empty

In Standard Buffer mode:
Automatically set in hardware when SPI1 transfers data from SPI1SR to SPI1RXB.
Automatically cleared in hardware when core reads SPI1BUF location, reading SPI1RXB.

In Enhanced Buffer mode:
Automatically set in hardware when SPI1 transfers data from SPI1SR to buffer, filling the last unread buffer location.
Automatically cleared in hardware when a buffer location is available for a transfer from SPI1SR.

REGISTER 15-2: SPI1CON1: SPI1 CONTROL REGISTER 1

U-0	U-0	U-0	R/W-0	R/W-0	R/W-0	R/W-0	R/W-0
—	—	—	DISSCK	DISSDO	MODE16	SMP	CKE(1)
bit 15							bit 8

R/W-0	R/W-0	R/W-0	R/W-0	R/W-0	R/W-0	R/W-0	R/W-0
SSEN	CKP	MSTEN	SPRE2	SPRE1	SPRE0	PPRE1	PPRE0
bit 7							bit 0

Legend:			
R = Readable bit	W = Writable bit	U = Unimplemented bit, read as ‘0’	
-n = Value at POR	‘1’ = Bit is set	‘0’ = Bit is cleared	x = Bit is unknown

bit 15-13 **Unimplemented:** Read as ‘0’

bit 12 **DISSCK:** Disable SCK1 pin bit (SPI Master modes only)
1 = Internal SPI clock is disabled, pin functions as I/O
0 = Internal SPI clock is enabled

bit 11 **DISSDO:** Disables SDO1 pin bit
1 = SDO1 pin is not used by module; pin functions as I/O
0 = SDO1 pin is controlled by the module

bit 10 **MODE16:** Word/Byte Communication Select bit
1 = Communication is word-wide (16 bits)
0 = Communication is byte-wide (8 bits)

bit 9 **SMP:** SPI1 Data Input Sample Phase bit
Master mode:
1 = Input data sampled at end of data output time
0 = Input data sampled at middle of data output time
Slave mode:
SMP must be cleared when SPI1 is used in Slave mode.

bit 8 **CKE:** SPI1 Clock Edge Select bit(1)
1 = Serial output data changes on transition from active clock state to Idle clock state (see bit 6)
0 = Serial output data changes on transition from Idle clock state to active clock state (see bit 6)

bit 7 **SSEN:** Slave Select Enable bit (Slave mode)
1 = $\overline{SS1}$ pin used for Slave mode
0 = $\overline{SS1}$ pin not used by module; pin controlled by port function

bit 6 **CKP:** Clock Polarity Select bit
1 = Idle state for clock is a high level; active state is a low level
0 = Idle state for clock is a low level; active state is a high level

bit 5 **MSTEN:** Master Mode Enable bit
1 = Master mode
0 = Slave mode

bit 4-2 **SPRE<2:0>:** Secondary Prescale bits (Master mode)
111 = Secondary prescale 1:1
110 = Secondary prescale 2:1
.
.
.
000 = Secondary prescale 8:1

Note 1: The CKE bit is not used in the Framed SPI modes. The user should program this bit to ‘0’ for the Framed SPI modes (FRMEN = 1).

 © 2009 Microchip Technology Inc.

REGISTER 15-2: SPI1CON1: SPI1 CONTROL REGISTER 1 (CONTINUED)

bit 1-0 **PPRE<1:0>:** Primary Prescale bits (Master mode)
11 = Primary prescale 1:1
10 = Primary prescale 4:1
01 = Primary prescale 16:1
00 = Primary prescale 64:1

Note 1: The CKE bit is not used in the Framed SPI modes. The user should program this bit to '0' for the Framed SPI modes (FRMEN = 1).

REGISTER 15-3: SPI1CON2: SPI1 CONTROL REGISTER 2

R/W-0	R/W-0	R/W-0	U-0	U-0	U-0	U-0	U-0
FRMEN	SPIFSD	SPIFPOL	—	—	—	—	—
bit 15							bit 8

U-0	U-0	U-0	U-0	U-0	U-0	R/W-0	R/W-0
—	—	—	—	—	—	SPIFE	SPIBEN
bit 7							bit 0

Legend:			
R = Readable bit	W = Writable bit	U = Unimplemented bit, read as '0'	
-n = Value at POR	'1' = Bit is set	'0' = Bit is cleared	x = Bit is unknown

bit 15 **FRMEN:** Framed SPI1 Support bit
1 = Framed SPI1 support enabled
0 = Framed SPI1 support disabled

bit 14 **SPIFSD:** Frame Sync Pulse Direction Control on $\overline{SS1}$ Pin bit
1 = Frame sync pulse input (slave)
0 = Frame sync pulse output (master)

bit 13 **SPIFPOL:** Frame Sync Pulse Polarity bit (Frame mode only)
1 = Frame sync pulse is active-high
0 = Frame sync pulse is active-low

bit 12-2 **Unimplemented:** Read as '0'

bit 1 **SPIFE:** Frame Sync Pulse Edge Select bit
1 = Frame sync pulse coincides with first bit clock
0 = Frame sync pulse precedes first bit clock

bit 0 **SPIBEN:** Enhanced Buffer Enable bit
1 = Enhanced Buffer enabled
0 = Enhanced Buffer disabled (Legacy mode)

EQUATION 15-1: RELATIONSHIP BETWEEN DEVICE AND SPI CLOCK SPEED(1)

$$F_{SCK} = \frac{F_{CY}}{\text{Primary Prescaler} * \text{Secondary Prescaler}}$$

Note 1: Based on $F_{CY} = F_{OSC}/2$, Doze mode and PLL are disabled.

TABLE 15-1: SAMPLE SCK FREQUENCIES(1,2)

FCY = 16 MHz		**Secondary Prescaler Settings**				
		1:1	**2:1**	**4:1**	**6:1**	**8:1**
Primary Prescaler Settings	1:1	Invalid	8000	4000	2667	2000
	4:1	4000	2000	1000	667	500
	16:1	1000	500	250	167	125
	64:1	250	125	63	42	31
FCY = 5 MHz						
Primary Prescaler Settings	1:1	5000	2500	1250	833	625
	4:1	1250	625	313	208	156
	16:1	313	156	78	52	39
	64:1	78	39	20	13	10

Note 1: Based on $F_{CY} = F_{OSC}/2$, Doze mode and PLL are disabled.
2: SCK1 frequencies indicated in kHz.

 © 2009 Microchip Technology Inc.

16.0 INTER-INTEGRATED CIRCUIT (I^2C™)

Note:	This data sheet summarizes the features of this group of PIC24F devices. It is not intended to be a comprehensive reference source. For more information on the Inter-Integrated Circuit, refer to the *"PIC24F Family Reference Manual"*, **Section 24. "Inter-Integrated Circuit (I^2C™)"** (DS39702).

The Inter-Integrated Circuit (I^2C™) module is a serial interface useful for communicating with other peripheral or microcontroller devices. These peripheral devices may be serial data EEPROMs, display drivers, A/D Converters, etc.

The I^2C module supports these features:

- Independent master and slave logic
- 7-bit and 10-bit device addresses
- General call address, as defined in the I^2C protocol
- Clock stretching to provide delays for the processor to respond to a slave data request
- Both 100 kHz and 400 kHz bus specifications
- Configurable address masking
- Multi-Master modes to prevent loss of messages in arbitration
- Bus Repeater mode, allowing the acceptance of all messages as a slave regardless of the address
- Automatic SCL

Figure 16-1 illustrates a block diagram of the module.

16.1 Pin Remapping Options

The I^2C module is tied to a fixed pin. To allow flexibility with peripheral multiplexing, the I2C1 module in 20-pin devices can be reassigned to the alternate pins, designated as SCL1 and SDA1 during device configuration.

Pin assignment is controlled by the I2C1SEL Configuration bit. Programming this bit (= 0) multiplexes the module to the SCL1 and SDA1 pins.

16.2 Communicating as a Master in a Single Master Environment

The details of sending a message in Master mode depends on the communications protocol for the device being communicated with. Typically, the sequence of events is as follows:

1. Assert a Start condition on SDA1 and SCL1.
2. Send the I^2C device address byte to the slave with a write indication.
3. Wait for and verify an Acknowledge from the slave.
4. Send the first data byte (sometimes known as the command) to the slave.
5. Wait for and verify an Acknowledge from the slave.
6. Send the serial memory address low byte to the slave.
7. Repeat steps 4 and 5 until all data bytes are sent.
8. Assert a Repeated Start condition on SDA1 and SCL1.
9. Send the device address byte to the slave with a read indication.
10. Wait for and verify an Acknowledge from the slave.
11. Enable master reception to receive serial memory data.
12. Generate an ACK or NACK condition at the end of a received byte of data.
13. Generate a Stop condition on SDA1 and SCL1.

FIGURE 16-1: I²C™ BLOCK DIAGRAM

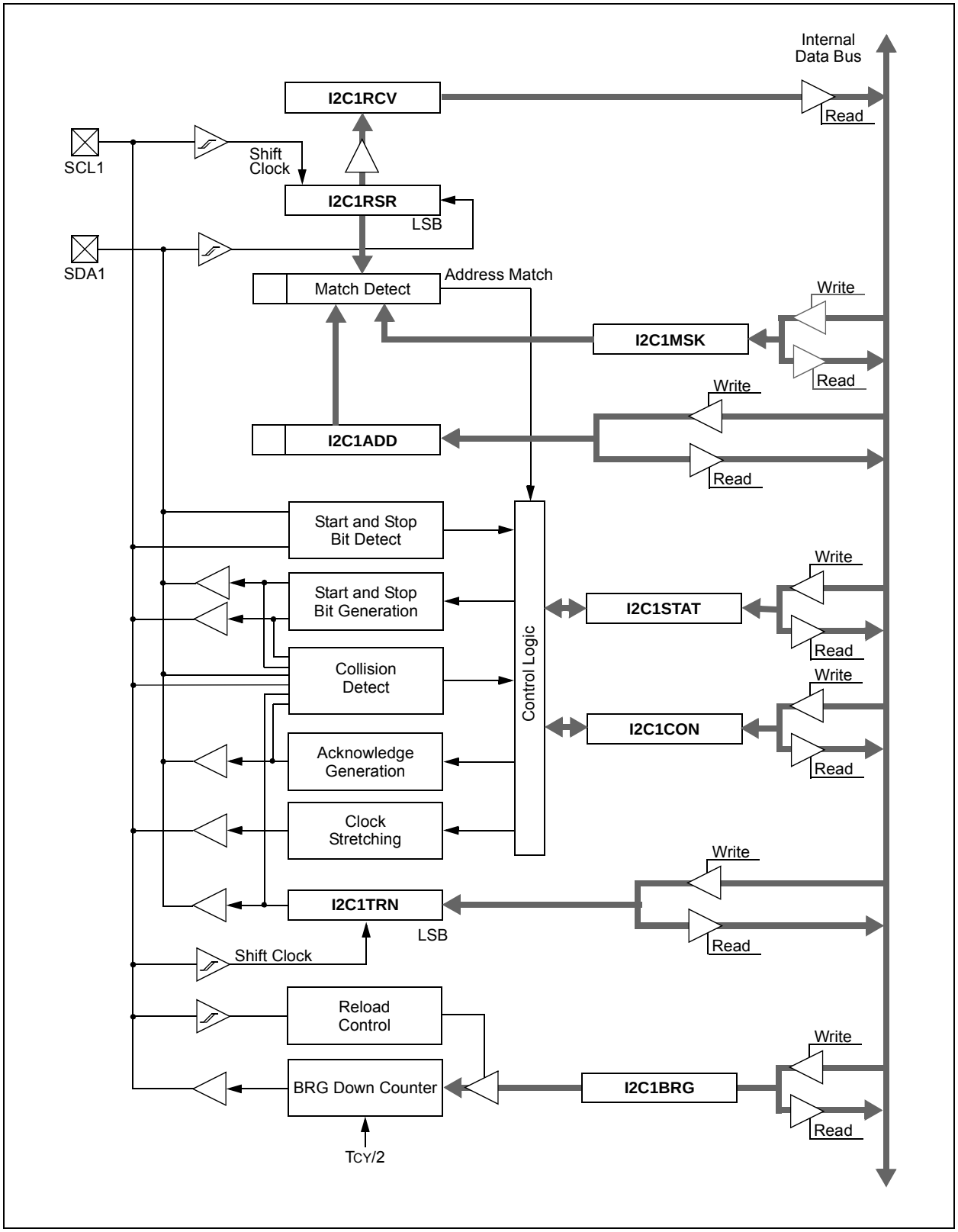

 © 2009 Microchip Technology Inc.

16.3 Setting Baud Rate When Operating as a Bus Master

To compute the Baud Rate Generator (BRG) reload value, use Equation 16-1.

EQUATION 16-1: COMPUTING BAUD RATE RELOAD VALUE(1)

$$F_{SCL} = \frac{F_{CY}}{I2C1BRG + 1 + \frac{F_{CY}}{10,000,000}}$$

or

$$I2C1BRG = \left(\frac{F_{CY}}{F_{SCL}} - \frac{F_{CY}}{10,000,000}\right) - 1$$

Note 1: Based on $F_{CY} = F_{OSC}/2$, Doze mode and PLL are disabled.

16.4 Slave Address Masking

The I2C1MSK register (Register 16-3) designates address bit positions as “don’t care” for both 7-Bit and 10-Bit Addressing modes. Setting a particular bit location (= 1) in the I2C1MSK register causes the slave module to respond whether the corresponding address bit value is ‘0’ or ‘1’. For example, when I2C1MSK is set to ‘00100000’, the slave module will detect both addresses: ‘0000000’ and ‘00100000’.

To enable address masking, the Intelligent Peripheral Management Interface (IPMI) must be disabled by clearing the IPMIEN bit (I2C1CON<11>).

Note: As a result of changes in the I²C protocol, the addresses in Table 16-2 are reserved and will not be Acknowledged in Slave mode. This includes any address mask settings that include any of these addresses.

TABLE 16-1: I²C™ CLOCK RATES(1)

Required System F_{SCL}	F_{CY}	I2C1BRG Value		Actual F_{SCL}
		(Decimal)	(Hexadecimal)	
100 kHz	16 MHz	157	9D	100 kHz
100 kHz	8 MHz	78	4E	100 kHz
100 kHz	4 MHz	39	27	99 kHz
400 kHz	16 MHz	37	25	404 kHz
400 kHz	8 MHz	18	12	404 kHz
400 kHz	4 MHz	9	9	385 kHz
400 kHz	2 MHz	4	4	385 kHz
1 MHz	16 MHz	13	D	1.026 MHz
1 MHz	8 MHz	6	6	1.026 MHz
1 MHz	4 MHz	3	3	0.909 MHz

Note 1: Based on $F_{CY} = F_{OSC}/2$, Doze mode and PLL are disabled.

TABLE 16-2: I²C™ RESERVED ADDRESSES(1)

Slave Address	R/$\overline{W}$ Bit	Description
0000 000	0	General Call Address(2)
0000 000	1	Start Byte
0000 001	x	Cbus Address
0000 010	x	Reserved
0000 011	x	Reserved
0000 1xx	x	HS Mode Master Code
1111 1xx	x	Reserved
1111 0xx	x	10-Bit Slave Upper Byte(3)

Note 1: The address bits listed here will never cause an address match, independent of the address mask settings.
2: Address will be Acknowledged only if GCEN = 1.
3: Match on this address can only occur on the upper byte in 10-Bit Addressing mode.

REGISTER 16-1: I2C1CON: I2C1 CONTROL REGISTER

R/W-0	U-0	R/W-0	R/W-1 HC	R/W-0	R/W-0	R/W-0	R/W-0
I2CEN	—	I2CSIDL	SCLREL	IPMIEN	A10M	DISSLW	SMEN
bit 15							bit 8

R/W-0	R/W-0	R/W-0	R/W-0, HC	R/W-0, HC	R/W-0, HC	R/W-0, HC	R/W-0, HC
GCEN	STREN	ACKDT	ACKEN	RCEN	PEN	RSEN	SEN
bit 7							bit 0

Legend:	HC = Hardware Clearable bit		
R = Readable bit	W = Writable bit	U = Unimplemented bit, read as ‘0’	
-n = Value at POR	‘1’ = Bit is set	‘0’ = Bit is cleared	x = Bit is unknown

bit 15 **I2CEN:** I2C1 Enable bit
1 = Enables the I2C1 module and configures the SDA1 and SCL1 pins as serial port pins
0 = Disables the I2C1 module; all I^2C™ pins are controlled by port functions

bit 14 **Unimplemented:** Read as ‘0’

bit 13 **I2CSIDL:** Stop in Idle Mode bit
1 = Discontinues module operation when device enters an Idle mode
0 = Continues module operation in Idle mode

bit 12 **SCLREL:** SCL1 Release Control bit (when operating as I^2C slave)
1 = Releases SCL1 clock
0 = Holds SCL1 clock low (clock stretch)
If STREN = 1:
Bit is R/$\overline{W}$ (i.e., software may write ‘0’ to initiate stretch and write ‘1’ to release clock). Hardware clear at beginning of slave transmission. Hardware clear at end of slave reception.
If STREN = 0:
Bit is R/S (i.e., software may only write ‘1’ to release clock). Hardware clear at beginning of slave transmission.

bit 11 **IPMIEN:** Intelligent Peripheral Management Interface (IPMI) Enable bit
1 = IPMI Support mode is enabled; all addresses Acknowledged
0 = IPMI Support mode is disabled

bit 10 **A10M:** 10-Bit Slave Addressing bit
1 = I2C1ADD is a 10-bit slave address
0 = I2C1ADD is a 7-bit slave address

bit 9 **DISSLW:** Disable Slew Rate Control bit
1 = Slew rate control disabled
0 = Slew rate control enabled

bit 8 **SMEN:** SMBus Input Levels bit
1 = Enables I/O pin thresholds compliant with the SMBus specification
0 = Disables the SMBus input thresholds

bit 7 **GCEN:** General Call Enable bit (when operating as I^2C slave)
1 = Enables interrupt when a general call address is received in the I2C1RSR (module is enabled for reception)
0 = General call address disabled

bit 6 **STREN:** SCL1 Clock Stretch Enable bit (when operating as I^2C slave)
Used in conjunction with the SCLREL bit.
1 = Enables software or receive clock stretching
0 = Disables software or receive clock stretching

 © 2009 Microchip Technology Inc.

REGISTER 16-1: I2C1CON: I2C1 CONTROL REGISTER (CONTINUED)

bit 5 **ACKDT:** Acknowledge Data bit (when operating as I^2C master; applicable during master receive)
Value that will be transmitted when the software initiates an Acknowledge sequence.
1 = Sends NACK during Acknowledge
0 = Sends ACK during Acknowledge

bit 4 **ACKEN:** Acknowledge Sequence Enable bit
(when operating as I^2C master; applicable during master receive)
1 = Initiates Acknowledge sequence on SDA1 and SCL1 pins and transmits ACKDT data bit; hardware clear at end of master Acknowledge sequence
0 = Acknowledge sequence not in progress

bit 3 **RCEN:** Receive Enable bit (when operating as I^2C master)
1 = Enables Receive mode for I^2C; hardware clear at end of eighth bit of master receive data byte
0 = Receive sequence not in progress

bit 2 **PEN:** Stop Condition Enable bit (when operating as I^2C master)
1 = Initiates Stop condition on SDA1 and SCL1 pins; hardware clear at end of master Stop sequence
0 = Stop condition not in progress

bit 1 **RSEN:** Repeated Start Condition Enable bit (when operating as I^2C master)
1 = Initiates Repeated Start condition on SDA1 and SCL1 pins; hardware clear at end of master Repeated Start sequence
0 = Repeated Start condition not in progress

bit 0 **SEN:** Start Condition Enable bit (when operating as I^2C master)
1 = Initiates Start condition on SDA1 and SCL1 pins; hardware clear at end of master Start sequence
0 = Start condition not in progress

REGISTER 16-2: I2C1STAT: I2C1 STATUS REGISTER

R-0, HSC	R-0, HSC	U-0	U-0	U-0	R/C-0, HS	R-0, HSC	R-0, HSC
ACKSTAT	TRSTAT	—	—	—	BCL	GCSTAT	ADD10
bit 15							bit 8

R/C-0, HS	R/C-0, HS	R-0, HSC	R/C-0, HSC	R/C-0, HSC	R-0, HSC	R-0, HSC	R-0, HSC
IWCOL	I2COV	D/$\overline{A}$	P	S	R/$\overline{W}$	RBF	TBF
bit 7							bit 0

Legend:	C = Clearable bit	HS = Hardware Settable bit	HSC = Hardware Settable/Clearable bit
R = Readable bit	W = Writable bit	U = Unimplemented bit, read as ‘0’	
-n = Value at POR	‘1’ = Bit is set	‘0’ = Bit is cleared	x = Bit is unknown

bit 15 **ACKSTAT:** Acknowledge Status bit
1 = NACK was detected last
0 = ACK was detected last
Hardware set or clear at end of Acknowledge.

bit 14 **TRSTAT:** Transmit Status bit
(When operating as I^{2}C™ master; applicable to master transmit operation.)
1 = Master transmit is in progress (8 bits + ACK)
0 = Master transmit is not in progress
Hardware set at beginning of master transmission; hardware clear at end of slave Acknowledge.

bit 13-11 **Unimplemented:** Read as ‘0’

bit 10 **BCL:** Master Bus Collision Detect bit
1 = A bus collision has been detected during a master operation
0 = No collision
Hardware set at detection of bus collision.

bit 9 **GCSTAT:** General Call Status bit
1 = General call address was received
0 = General call address was not received
Hardware set when address matches general call address; hardware clear at Stop detection.

bit 8 **ADD10:** 10-Bit Address Status bit
1 = 10-bit address was matched
0 = 10-bit address was not matched
Hardware set at match of 2nd byte of matched 10-bit address; hardware clear at Stop detection.

bit 7 **IWCOL:** Write Collision Detect bit
1 = An attempt to write to the I2C1TRN register failed because the I^{2}C module is busy
0 = No collision
Hardware set at occurrence of write to I2C1TRN while busy (cleared by software).

bit 6 **I2COV:** Receive Overflow Flag bit
1 = A byte was received while the I2C1RCV register is still holding the previous byte
0 = No overflow
Hardware set at attempt to transfer I2C1RSR to I2C1RCV (cleared by software).

bit 5 **D/$\overline{A}$:** Data/$\overline{\text{Address}}$ bit (when operating as I^{2}C slave)
1 = Indicates that the last byte received was data
0 = Indicates that the last byte received was the device address
Hardware clear at device address match; hardware set by write to I2C1TRN or by reception of slave byte.

bit 4 **P:** Stop bit
1 = Indicates that a Stop bit has been detected last
0 = Stop bit was not detected last
Hardware set or clear when Start, Repeated Start or Stop detected.

 © 2009 Microchip Technology Inc.

REGISTER 16-2: I2C1STAT: I2C1 STATUS REGISTER (CONTINUED)

bit 3 **S:** Start bit
1 = Indicates that a Start (or Repeated Start) bit has been detected last
0 = Start bit was not detected last
Hardware set or clear when Start, Repeated Start or Stop detected.

bit 2 **R/$\overline{W}$:** Read/$\overline{\text{Write}}$ Information bit (when operating as I^2C slave)
1 = Read – indicates data transfer is output from slave
0 = Write – indicates data transfer is input to slave
Hardware set or clear after reception of I^2C device address byte.

bit 1 **RBF:** Receive Buffer Full Status bit
1 = Receive complete, I2C1RCV is full
0 = Receive not complete, I2C1RCV is empty
Hardware set when I2C1RCV is written with received byte; hardware clear when software reads I2C1RCV.

bit 0 **TBF:** Transmit Buffer Full Status bit
1 = Transmit in progress, I2C1TRN is full
0 = Transmit complete, I2C1TRN is empty
Hardware set when software writes to I2C1TRN; hardware clear at completion of data transmission.

REGISTER 16-3: I2C1MSK: I2C1 SLAVE MODE ADDRESS MASK REGISTER

U-0	U-0	U-0	U-0	U-0	U-0	R/W-0	R/W-0
—	—	—	—	—	—	AMSK9	AMSK8
bit 15							bit 8

R/W-0	R/W-0	R/W-0	R/W-0	R/W-0	R/W-0	R/W-0	R/W-0
AMSK7	AMSK6	AMSK5	AMSK4	AMSK3	AMSK2	AMSK1	AMSK0
bit 7							bit 0

Legend:			
R = Readable bit	W = Writable bit	U = Unimplemented bit, read as ‘0’	
-n = Value at POR	‘1’ = Bit is set	‘0’ = Bit is cleared	x = Bit is unknown

bit 15-10 **Unimplemented:** Read as ‘0’

bit 9-0 **AMSK<9:0>:** Mask for Address Bit x Select bits
1 = Enable masking for bit x of incoming message address; bit match not required in this position
0 = Disable masking for bit x; bit match required in this position

REGISTER 16-4: PADCFG1: PAD CONFIGURATION CONTROL REGISTER

U-0	U-0	U-0	U-0	U-0	U-0	U-0	U-0
—	—	—	—	—	—	—	—
bit 15							bit 8

U-0	U-0	U-0	R/W-0	R/W-0	U-0	U-0	U-0
—	—	—	SMBUSDEL	OC1TRIS(1,2)	—	—	—
bit 7							bit 0

Legend:			
R = Readable bit	W = Writable bit	U = Unimplemented bit, read as ‘0’	
-n = Value at POR	‘1’ = Bit is set	‘0’ = Bit is cleared	x = Bit is unknown

bit 15-5 **Unimplemented:** Read as ‘0’

bit 4 **SMBUSDEL:** SMBus SDA Input Delay Select bit
1 = The I^2C™ module is configured for a longer SMBus input delay (nominal 300 ns delay)
0 = The 1^2C module is configured for a legacy input delay (nominal 150 ns delay)

bit 2-0 **Unimplemented:** Read as ‘0’

Note 1: To enable the actual OC1 output, the OCPWM1 module has to be enabled.
2: Bit 3 is described in related chapters.

 © 2009 Microchip Technology Inc.

17.0 UNIVERSAL ASYNCHRONOUS RECEIVER TRANSMITTER (UART)

Note:	This data sheet summarizes the features of this group of PIC24F devices. It is not intended to be a comprehensive reference source. For more information on the Universal Asynchronous Receiver Transmitter, refer to the *"PIC24F Family Reference Manual"*, **Section 21. "UART"** (DS39708).

The Universal Asynchronous Receiver Transmitter (UART) module is one of the serial I/O modules available in this PIC24F device family. The UART is a full-duplex asynchronous system that can communicate with peripheral devices, such as personal computers, LIN, RS-232 and RS-485 interfaces. This module also supports a hardware flow control option with the $\overline{\text{U1CTS}}$ and $\overline{\text{U1RTS}}$ pins, and also includes an IrDA® encoder and decoder.

The primary features of the UART module are:

- Full-Duplex, 8-Bit or 9-Bit Data Transmission through the U1TX and U1RX pins
- Even, Odd or No Parity Options (for 8-bit data)
- One or Two Stop bits
- Hardware Flow Control Option with $\overline{\text{U1CTS}}$ and $\overline{\text{U1RTS}}$ pins
- Fully Integrated Baud Rate Generator (IBRG) with 16-Bit Prescaler
- Baud Rates Ranging from 1 Mbps to 15 bps at 16 MIPS
- 4-Deep, First-In-First-Out (FIFO) Transmit Data Buffer
- 4-Deep FIFO Receive Data Buffer
- Parity, Framing and Buffer Overrun Error Detection
- Support for 9-Bit mode with Address Detect (9th bit = 1)
- Transmit and Receive Interrupts
- Loopback mode for Diagnostic Support
- Support for Sync and Break Characters
- Supports Automatic Baud Rate Detection
- IrDA Encoder and Decoder Logic
- 16x Baud Clock Output for IrDA Support

A simplified block diagram of the UART is displayed in Figure 17-1. The UART module consists of these important hardware elements:

- Baud Rate Generator
- Asynchronous Transmitter
- Asynchronous Receiver

FIGURE 17-1: UART SIMPLIFIED BLOCK DIAGRAM

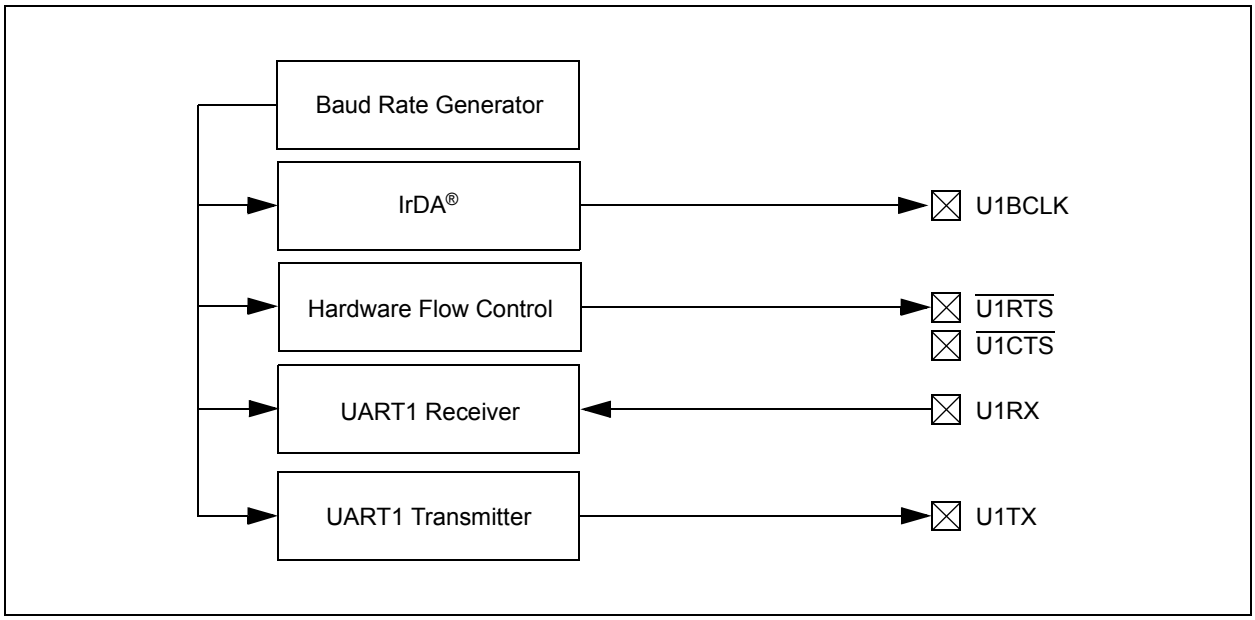

17.1 UART Baud Rate Generator (BRG)

The UART module includes a dedicated 16-bit Baud Rate Generator (BRG). The U1BRG register controls the period of a free-running, 16-bit timer. Equation 17-1 provides the formula for computation of the baud rate with BRGH = 0.

EQUATION 17-1: UART BAUD RATE WITH BRGH = 0(1)

$$\text{Baud Rate} = \frac{F_{CY}}{16 \cdot (U1BRG + 1)}$$

$$U1BRG = \frac{F_{CY}}{16 \cdot \text{Baud Rate}} - 1$$

Note 1: Based on $F_{CY} = F_{OSC}/2$, Doze mode and PLL are disabled.

Example 17-1 provides the calculation of the baud rate error for the following conditions:

- F_{CY} = 4 MHz
- Desired Baud Rate = 9600

The maximum baud rate (BRGH = 0) possible is $F_{CY}/16$ (for U1BRG = 0) and the minimum baud rate possible is $F_{CY}/(16 * 65536)$.

Equation 17-2 provides the formula for computation of the baud rate with BRGH = 1.

EQUATION 17-2: UART BAUD RATE WITH BRGH = 1(1)

$$\text{Baud Rate} = \frac{F_{CY}}{4 \cdot (U1BRG + 1)}$$

$$U1BRG = \frac{F_{CY}}{4 \cdot \text{Baud Rate}} - 1$$

Note 1: Based on $F_{CY} = F_{OSC}/2$, Doze mode and PLL are disabled.

The maximum baud rate (BRGH = 1) possible is $F_{CY}/4$ (for U1BRG = 0) and the minimum baud rate possible is $F_{CY}/(4 * 65536)$.

Writing a new value to the U1BRG register causes the BRG timer to be reset (cleared). This ensures the BRG does not wait for a timer overflow before generating the new baud rate.

EXAMPLE 17-1: BAUD RATE ERROR CALCULATION (BRGH = 0)(1)

Desired Baud Rate = $F_{CY}/(16\ (U1BRG + 1))$

Solving for UxBRG value:

U1BRG = $((F_{CY}/\text{Desired Baud Rate})/16) - 1$
U1BRG = $((4000000/9600)/16) - 1$
U1BRG = 25

Calculated Baud Rate = 4000000/(16 (25 + 1))
= 9615

Error = (Calculated Baud Rate – Desired Baud Rate) / Desired Baud Rate
= (9615 – 9600)/9600
= 0.16%

Note 1: Based on $F_{CY} = F_{OSC}/2$, Doze mode and PLL are disabled.

 © 2009 Microchip Technology Inc.

17.2 Transmitting in 8-Bit Data Mode

1. Set up the UART:
   a) Write appropriate values for data, parity and Stop bits.
   b) Write appropriate baud rate value to the U1BRG register.
   c) Set up transmit and receive interrupt enable and priority bits.
2. Enable the UART.
3. Set the UTXEN bit (causes a transmit interrupt two cycles after being set).
4. Write data byte to lower byte of U1TXREG word. The value will be immediately transferred to the Transmit Shift Register (TSR), and the serial bit stream will start shifting out with the next rising edge of the baud clock.
5. Alternately, the data byte may be transferred while UTXEN = 0, and then, the user may set UTXEN. This will cause the serial bit stream to begin immediately because the baud clock will start from a cleared state.
6. A transmit interrupt will be generated as per interrupt control bit, UTXISEL1.

17.3 Transmitting in 9-Bit Data Mode

1. Set up the UART (as described in **Section 17.2 "Transmitting in 8-Bit Data Mode"**).
2. Enable the UART.
3. Set the UTXEN bit (causes a transmit interrupt two cycles after being set).
4. Write U1TXREG as a 16-bit value only.
5. A word write to U1TXREG triggers the transfer of the 9-bit data to the TSR. The serial bit stream will start shifting out with the first rising edge of the baud clock.
6. A transmit interrupt will be generated as per the setting of control bit, UTXISEL1.

17.4 Break and Sync Transmit Sequence

The following sequence will send a message frame header made up of a Break, followed by an auto-baud Sync byte.

1. Configure the UART for the desired mode.
2. Set UTXEN and UTXBRK – sets up the Break character.
3. Load the U1TXREG with a dummy character to initiate transmission (value is ignored).
4. Write '55h' to U1TXREG – loads the Sync character into the transmit FIFO.
5. After the Break has been sent, the UTXBRK bit is reset by hardware. The Sync character now transmits.

17.5 Receiving in 8-Bit or 9-Bit Data Mode

1. Set up the UART (as described in **Section 17.2 "Transmitting in 8-Bit Data Mode"**).
2. Enable the UART.
3. A receive interrupt will be generated when one or more data characters have been received as per interrupt control bit, URXISEL1.
4. Read the OERR bit to determine if an overrun error has occurred. The OERR bit must be reset in software.
5. Read U1RXREG.

The act of reading the UxRXREG character will move the next character to the top of the receive FIFO, including a new set of PERR and FERR values.

17.6 Operation of $\overline{\text{U1CTS}}$ and $\overline{\text{U1RTS}}$ Control Pins

UART1 Clear to Send ($\overline{\text{U1CTS}}$) and Request to Send ($\overline{\text{U1RTS}}$) are the two hardware-controlled pins that are associated with the UART module. These two pins allow the UART to operate in Simplex and Flow Control modes. They are implemented to control the transmission and reception between the Data Terminal Equipment (DTE). The UEN<1:0> bits in the U1MODE register configure these pins.

17.7 Infrared Support

The UART module provides two types of infrared UART support: one is the IrDA clock output to support an external IrDA encoder and decoder device (legacy module support), and the other is the full implementation of the IrDA encoder and decoder.

As the IrDA modes require a 16x baud clock, they will only work when the BRGH bit (U1MODE<3>) is '0'.

17.7.1 EXTERNAL IrDA SUPPORT – IrDA CLOCK OUTPUT

To support external IrDA encoder and decoder devices, the U1BCLK pin (same as the $\overline{\text{U1RTS}}$ pin) can be configured to generate the 16x baud clock. When UEN<1:0> = 11, the U1BCLK pin will output the 16x baud clock if the UART module is enabled; it can be used to support the IrDA codec chip.

17.7.2 BUILT-IN IrDA ENCODER AND DECODER

The UART has full implementation of the IrDA encoder and decoder as part of the UART module. The built-in IrDA encoder and decoder functionality is enabled using the IREN bit (U1MODE<12>). When enabled (IREN = 1), the receive pin (U1RX) acts as the input from the infrared receiver. The transmit pin (U1TX) acts as the output to the infrared transmitter.

REGISTER 17-1: U1MODE: UART1 MODE REGISTER

R/W-0	U-0	R/W-0	R/W-0	R/W-0	U-0	R/W-0(2)	R/W-0(2)
UARTEN	—	USIDL	IREN(1)	RTSMD	—	UEN1	UEN0
bit 15							bit 8

R/C-0, HC	R/W-0	R/W-0, HC	R/W-0	R/W-0	R/W-0	R/W-0	R/W-0
WAKE	LPBACK	ABAUD	RXINV	BRGH	PDSEL1	PDSEL0	STSEL
bit 7							bit 0

Legend:	C = Clearable bit	HC = Hardware Clearable bit	
R = Readable bit	W = Writable bit	U = Unimplemented bit, read as ‘0’	
-n = Value at POR	‘1’ = Bit is set	‘0’ = Bit is cleared	x = Bit is unknown

bit 15 **UARTEN:** UART1 Enable bit
- 1 = UART1 is enabled; all UART1 pins are controlled by UART1 as defined by UEN<1:0>
- 0 = UART1 is disabled; all UART1 pins are controlled by port latches; UART1 power consumption is minimal

bit 14 **Unimplemented:** Read as ‘0’

bit 13 **USIDL:** Stop in Idle Mode bit
- 1 = Discontinue module operation when device enters Idle mode
- 0 = Continue module operation in Idle mode

bit 12 **IREN:** IrDA® Encoder and Decoder Enable bit(1)
- 1 = IrDA encoder and decoder enabled
- 0 = IrDA encoder and decoder disabled

bit 11 **RTSMD:** Mode Selection for $\overline{\text{U1RTS}}$ Pin bit
- 1 = $\overline{\text{U1RTS}}$ pin in Simplex mode
- 0 = $\overline{\text{U1RTS}}$ pin in Flow Control mode

bit 10 **Unimplemented:** Read as ‘0’

bit 9-8 **UEN<1:0>:** UART1 Enable bits(2)
- 11 = U1TX, U1RX and U1BCLK pins are enabled and used; $\overline{\text{U1CTS}}$ pin controlled by port latches
- 10 = U1TX, U1RX, $\overline{\text{U1CTS}}$ and $\overline{\text{U1RTS}}$ pins are enabled and used
- 01 = U1TX, U1RX and $\overline{\text{U1RTS}}$ pins are enabled and used; $\overline{\text{U1CTS}}$ pin controlled by port latches
- 00 = U1TX and UxRX pins are enabled and used; $\overline{\text{U1CTS}}$ and $\overline{\text{U1RTS}}$/U1BCLK pins controlled by port latches

bit 7 **WAKE:** Wake-up on Start Bit Detect During Sleep Mode Enable bit
- 1 = UART1 will continue to sample the U1RX pin; interrupt generated on falling edge, bit cleared in hardware on following rising edge
- 0 = No wake-up enabled

bit 6 **LPBACK:** UART1 Loopback Mode Select bit
- 1 = Enable Loopback mode
- 0 = Loopback mode is disabled

bit 5 **ABAUD:** Auto-Baud Enable bit
- 1 = Enable baud rate measurement on the next character – requires reception of a Sync field (55h); cleared in hardware upon completion
- 0 = Baud rate measurement disabled or completed

bit 4 **RXINV:** Receive Polarity Inversion bit
- 1 = U1RX Idle state is ‘0’
- 0 = U1RX Idle state is ‘1’

Note 1: This feature is only available for the 16x BRG mode (BRGH = 0).
2: Bit availability depends on pin availability.

 © 2009 Microchip Technology Inc.

REGISTER 17-1: U1MODE: UART1 MODE REGISTER (CONTINUED)

bit 3 **BRGH:** High Baud Rate Enable bit
1 = BRG generates 4 clocks per bit period (4x baud clock, High-Speed mode)
0 = BRG generates 16 clocks per bit period (16x baud clock, Standard mode)

bit 2-1 **PDSEL<1:0>:** Parity and Data Selection bits
11 = 9-bit data, no parity
10 = 8-bit data, odd parity
01 = 8-bit data, even parity
00 = 8-bit data, no parity

bit 0 **STSEL:** Stop Bit Selection bit
1 = Two Stop bits
0 = One Stop bit

Note 1: This feature is only available for the 16x BRG mode (BRGH = 0).
2: Bit availability depends on pin availability.

REGISTER 17-2: U1STA: UART1 STATUS AND CONTROL REGISTER

R/W-0	R/W-0	R/W-0	U-0	R/W-0, HC	R/W-0	R-0, HSC	R-1, HSC
UTXISEL1	UTXINV	UTXISEL0	—	UTXBRK	UTXEN	UTXBF	TRMT
bit 15							bit 8

R/W-0	R/W-0	R/W-0	R-1, HSC	R-0, HSC	R-0, HSC	R/C-0, HS	R-0, HSC
URXISEL1	URXISEL0	ADDEN	RIDLE	PERR	FERR	OERR	URXDA
bit 7							bit 0

Legend:	C = Clearable bit	HC = Hardware Clearable bit	
	HS = Hardware Settable bit	HSC = Hardware Settable/Clearable bit	
R = Readable bit	W = Writable bit	U = Unimplemented bit, read as ‘0’	
-n = Value at POR	‘1’ = Bit is set	‘0’ = Bit is cleared	x = Bit is unknown

bit 15,13 **UTXISEL<1:0>:** Transmission Interrupt Mode Selection bits
- 11 = Reserved; do not use
- 10 = Interrupt when a character is transferred to the Transmit Shift Register (TSR), and as a result, the transmit buffer becomes empty
- 01 = Interrupt when the last character is shifted out of the Transmit Shift Register; all transmit operations are completed
- 00 = Interrupt when a character is transferred to the Transmit Shift Register (this implies there is at least one character open in the transmit buffer)

bit 14 **UTXINV:** IrDA® Encoder Transmit Polarity Inversion bit

If IREN = 0:
- 1 = U1TX Idle ‘0’
- 0 = U1TX Idle ‘1’

If IREN = 1:
- 1 = U1TX Idle ‘1’
- 0 = U1TX Idle ‘0’

bit 12 **Unimplemented:** Read as ‘0’

bit 11 **UTXBRK:** Transmit Break bit
- 1 = Send Sync Break on next transmission – Start bit, followed by twelve ‘0’ bits, followed by Stop bit; cleared by hardware upon completion
- 0 = Sync Break transmission disabled or completed

bit 10 **UTXEN:** Transmit Enable bit
- 1 = Transmit enabled, U1TX pin controlled by UART1
- 0 = Transmit disabled, any pending transmission is aborted and buffer is reset. U1TX pin controlled by the PORT register.

bit 9 **UTXBF:** Transmit Buffer Full Status bit (read-only)
- 1 = Transmit buffer is full
- 0 = Transmit buffer is not full, at least one more character can be written

bit 8 **TRMT:** Transmit Shift Register Empty bit (read-only)
- 1 = Transmit Shift Register is empty and transmit buffer is empty (the last transmission has completed)
- 0 = Transmit Shift Register is not empty, a transmission is in progress or queued

bit 7-6 **URXISEL<1:0>:** Receive Interrupt Mode Selection bits
- 11 = Interrupt is set on RSR transfer, making the receive buffer full (i.e., has 4 data characters)
- 10 = Interrupt is set on RSR transfer, making the receive buffer 3/4 full (i.e., has 3 data characters)
- 0x = Interrupt is set when any character is received and transferred from the RSR to the receive buffer. Receive buffer has one or more characters.

 © 2009 Microchip Technology Inc.

REGISTER 17-2: U1STA: UART1 STATUS AND CONTROL REGISTER (CONTINUED)

bit 5 **ADDEN:** Address Character Detect bit (bit 8 of received data = 1)
1 = Address Detect mode enabled. If 9-bit mode is not selected, this does not take effect.
0 = Address Detect mode disabled

bit 4 **RIDLE:** Receiver Idle bit (read-only)
1 = Receiver is Idle
0 = Receiver is active

bit 3 **PERR:** Parity Error Status bit (read-only)
1 = Parity error has been detected for the current character (character at the top of the receive FIFO)
0 = Parity error has not been detected

bit 2 **FERR:** Framing Error Status bit (read-only)
1 = Framing error has been detected for the current character (character at the top of the receive FIFO)
0 = Framing error has not been detected

bit 1 **OERR:** Receive Buffer Overrun Error Status bit (clear/read-only)
1 = Receive buffer has overflowed
0 = Receive buffer has not overflowed (clearing a previously set OERR bit (1 → 0 transition) will reset the receiver buffer and the RSR to the empty state)

bit 0 **URXDA:** Receive Buffer Data Available bit (read-only)
1 = Receive buffer has data; at least one more character can be read
0 = Receive buffer is empty

REGISTER 17-3: U1TXREG: UART1 TRANSMIT REGISTER

U-x	U-x	U-x	U-x	U-x	U-x	U-x	W-x
—	—	—	—	—	—	—	UTX8
bit 15							bit 8

W-x	W-x	W-x	W-x	W-x	W-x	W-x	W-x
UTX7	UTX6	UTX5	UTX4	UTX3	UTX2	UTX1	UTX0
bit 7							bit 0

Legend:			
R = Readable bit	W = Writable bit	U = Unimplemented bit, read as ‘0’	
-n = Value at POR	‘1’ = Bit is set	‘0’ = Bit is cleared	x = Bit is unknown

bit 15-9 **Unimplemented:** Read as ‘0’
bit 8 **UTX8:** Data of the Transmitted Character bit (in 9-bit mode)
bit 7-0 **UTX<7:0>:** Data of the Transmitted Character bits

REGISTER 17-4: U1RXREG: UART1 RECEIVE REGISTER

U-0	U-0	U-0	U-0	U-0	U-0	U-0	R-0, HSC
—	—	—	—	—	—	—	URX8
bit 15							bit 8

R-0, HSC	R-0, HSC	R-0, HSC	R-0, HSC	R-0, HSC	R-0, HSC	R-0, HSC	R-0, HSC
URX7	URX6	URX5	URX4	URX3	URX2	URX1	URX0
bit 7							bit 0

Legend:	HSC = Hardware Settable/Clearable bit		
R = Readable bit	W = Writable bit	U = Unimplemented bit, read as ‘0’	
-n = Value at POR	‘1’ = Bit is set	‘0’ = Bit is cleared	x = Bit is unknown

bit 15-9 **Unimplemented:** Read as ‘0’
bit 8 **URX8:** Data of the Received Character bit (in 9-bit mode)
bit 7-0 **URX<7:0>:** Data of the Received Character bits

 © 2009 Microchip Technology Inc.

18.0 HIGH/LOW-VOLTAGE DETECT (HLVD)

Note:	This data sheet summarizes the features of this group of PIC24F devices. It is not intended to be a comprehensive reference source. For more information on the High/Low-Voltage Detect, refer to the *"PIC24F Family Reference Manual"*, **Section 36. "High-Level Integration with Programmable High/Low-Voltage Detect (HLVD)"** (DS39725).

The High/Low-Voltage Detect module (HLVD) is a programmable circuit that allows the user to specify both the device voltage trip point and the direction of change.

An interrupt flag is set if the device experiences an excursion past the trip point in the direction of change. If the interrupt is enabled, the program execution will branch to the interrupt vector address and the software can then respond to the interrupt.

The HLVD Control register (see Register 18-1) completely controls the operation of the HLVD module. This allows the circuitry to be "turned off" by the user under software control, which minimizes the current consumption for the device.

FIGURE 18-1: HIGH/LOW-VOLTAGE DETECT (HLVD) MODULE BLOCK DIAGRAM

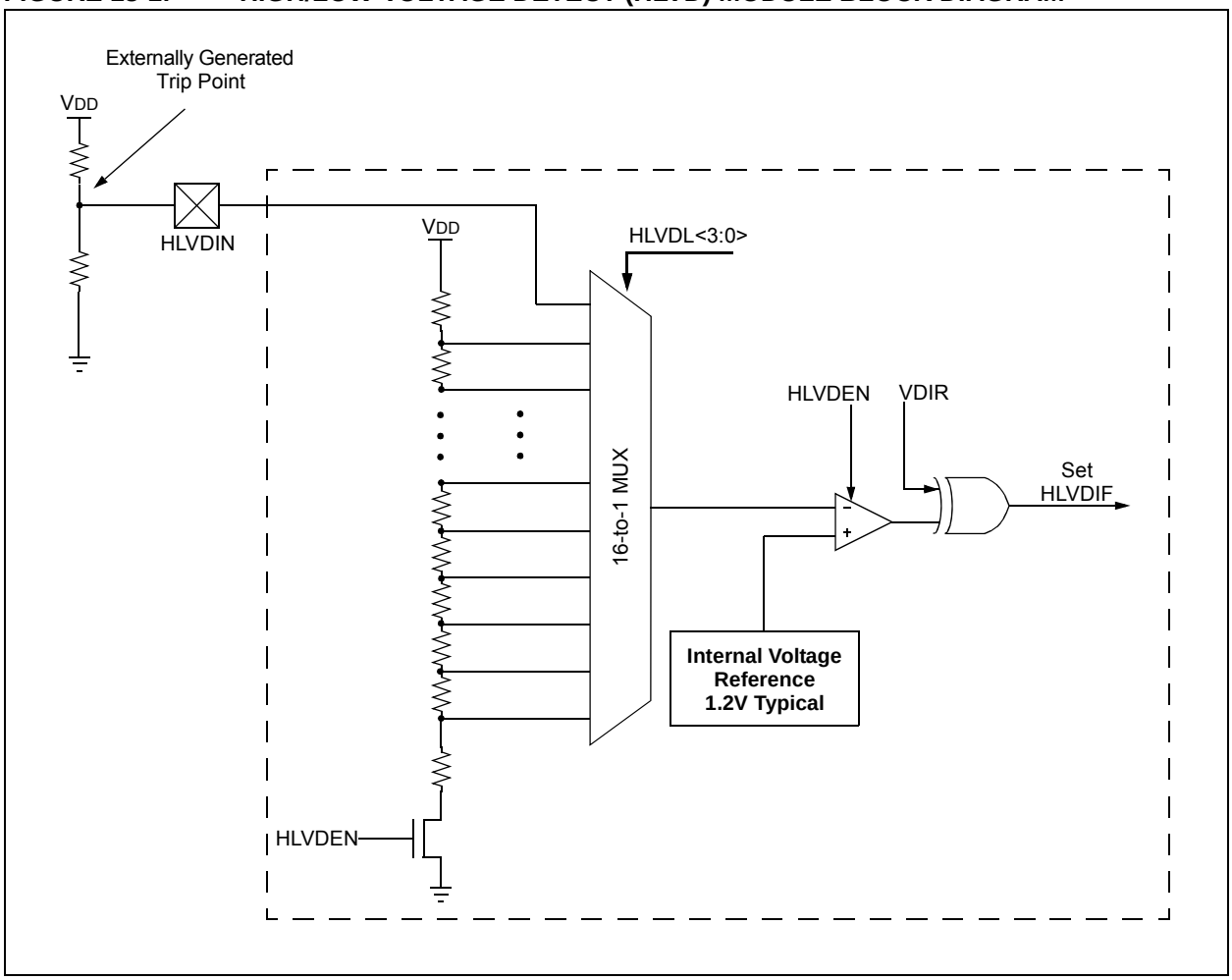

REGISTER 18-1: HLVDCON: HIGH/LOW-VOLTAGE DETECT CONTROL REGISTER

R/W-0	U-0	R/W-0	U-0	U-0	U-0	U-0	U-0
HLVDEN	—	HLSIDL	—	—	—	—	—
bit 15							bit 8

R/W-0	R/W-0	R/W-0	U-0	R/W-0	R/W-0	R/W-0	R/W-0
VDIR	BGVST	IRVST	—	HLVDL3	HLVDL2	HLVDL1	HLVDL0
bit 7							bit 0

Legend:			
R = Readable bit	W = Writable bit	U = Unimplemented bit, read as ‘0’	
-n = Value at POR	‘1’ = Bit is set	‘0’ = Bit is cleared	x = Bit is unknown

bit 15 **HLVDEN:** High/Low-Voltage Detect Power Enable bit
1 = HLVD enabled
0 = HLVD disabled

bit 14 **Unimplemented:** Read as ‘0’

bit 13 **HLSIDL:** HLVD Stop in Idle Mode bit
1 = Discontinue module operation when device enters Idle mode
0 = Continue module operation in Idle mode

bit 12-8 **Unimplemented:** Read as ‘0’

bit 7 **VDIR:** Voltage Change Direction Select bit
1 = Event occurs when voltage equals or exceeds trip point (HLVDL<3:0>)
0 = Event occurs when voltage equals or falls below trip point (HLVDL<3:0>)

bit 6 **BGVST:** Band Gap Voltage Stable Flag bit
1 = Indicates that the band gap voltage is stable
0 = Indicates that the band gap voltage is unstable

bit 5 **IRVST:** Internal Reference Voltage Stable Flag bit
1 = Indicates that the internal reference voltage is stable and the high-voltage detect logic generates the interrupt flag at the specified voltage range
0 = Indicates that the internal reference voltage is unstable and the high-voltage detect logic will not generate the interrupt flag at the specified voltage range, and the HLVD interrupt should not be enabled

bit 4 **Unimplemented:** Read as ‘0’

bit 3-0 **HLVDL<3:0>:** High/Low-Voltage Detection Limit bits
1111 = External analog input is used (input comes from the HLVDIN pin)
1110 = Trip point 1(1)
1101 = Trip point 2(1)
1100 = Trip point 3(1)
.
.
.
0000 = Trip point 15(1)

Note 1: For actual trip point, refer to **Section 26.0 “Electrical Characteristics”**.

 © 2009 Microchip Technology Inc.

19.0 10-BIT HIGH-SPEED A/D CONVERTER

Note:	This data sheet summarizes the features of this group of PIC24F devices. It is not intended to be a comprehensive reference source. For more information on the 10-Bit High-Speed A/D Converter, refer to the *"PIC24F Family Reference Manual"*, **Section 17. "10-Bit A/D Converter"** (DS39705).

The 10-bit A/D Converter has the following key features:

- Successive Approximation (SAR) conversion
- Conversion speeds of up to 500 ksps
- 9 analog input pins
- External voltage reference input pins
- Internal band gap reference inputs
- Automatic Channel Scan mode
- Selectable conversion trigger source
- 16-word conversion result buffer
- Selectable Buffer Fill modes
- Four result alignment options
- Operation during CPU Sleep and Idle modes

On all PIC24F04KA201 family devices, the 10-bit A/D Converter has nine analog input pins, designated AN0 through AN5 and AN10 through AN12. In addition, there are two analog input pins for external voltage reference connections (V_{REF+} and V_{REF-}). These voltage reference inputs may be shared with other analog input pins.

A block diagram of the A/D Converter is displayed in Figure 19-1.

To perform an A/D conversion:

1. Configure the A/D module:
   a) Configure port pins as analog inputs and/or select band gap reference inputs (AD1PCFG<15:13>, AD1PCFG<9:6>).
   b) Select voltage reference source to match expected range on analog inputs (AD1CON2<15:13>).
   c) Select the analog conversion clock to match the desired data rate with the processor clock (AD1CON3<7:0>).
   d) Select the appropriate sample/conversion sequence (AD1CON1<7:5> and AD1CON3<12:8>).
   e) Select how conversion results are presented in the buffer (AD1CON1<9:8>).
   f) Select interrupt rate (AD1CON2<5:2>).
   g) Turn on A/D module (AD1CON1<15>).
2. Configure A/D interrupt (if required):
   a) Clear the AD1IF bit.
   b) Select A/D interrupt priority.

FIGURE 19-1: 10-BIT HIGH-SPEED A/D CONVERTER BLOCK DIAGRAM

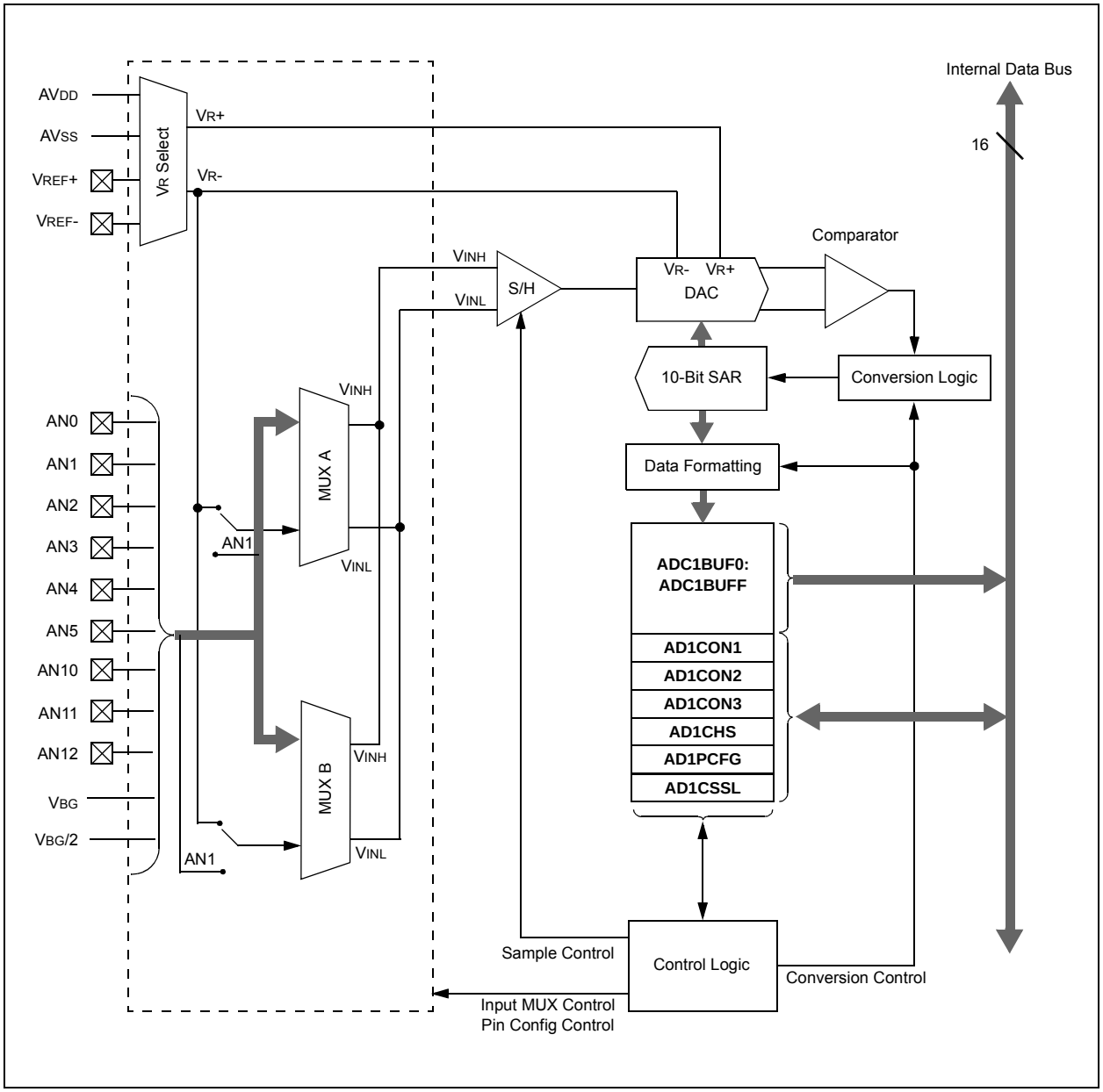

 © 2009 Microchip Technology Inc.

REGISTER 19-1: AD1CON1: A/D CONTROL REGISTER 1

R/W-0	U-0	R/W-0	U-0	U-0	U-0	R/W-0	R/W-0
ADON(1)	—	ADSIDL	—	—	—	FORM1	FORM0
bit 15							bit 8

R/W-0	R/W-0	R/W-0	U-0	U-0	R/W-0	R/W-0, HSC	R/W-0, HSC
SSRC2	SSRC1	SSRC0	—	—	ASAM	SAMP	DONE
bit 7							bit 0

Legend:	HSC = Hardware Settable/Clearable bit		
R = Readable bit	W = Writable bit	U = Unimplemented bit, read as ‘0’	
-n = Value at POR	‘1’ = Bit is set	‘0’ = Bit is cleared	x = Bit is unknown

bit 15 **ADON:** A/D Operating Mode bit(1)
`1` = A/D Converter module is operating
`0` = A/D Converter is off

bit 14 **Unimplemented:** Read as ‘`0`’

bit 13 **ADSIDL:** Stop in Idle Mode bit
`1` = Discontinue module operation when device enters Idle mode
`0` = Continue module operation in Idle mode

bit 12-10 **Unimplemented:** Read as ‘`0`’

bit 9-8 **FORM<1:0>:** Data Output Format bits
`11` = Signed fractional (`sddd dddd dd00 0000`)
`10` = Fractional (`dddd dddd dd00 0000`)
`01` = Signed integer (`ssss sssd dddd dddd`)
`00` = Integer (`0000 00dd dddd dddd`)

bit 7-5 **SSRC<2:0>:** Conversion Trigger Source Select bits
`111` = Internal counter ends sampling and starts conversion (auto-convert)
`110` = CTMU event ends sampling and starts conversion
`101` = Reserved
`100` = Reserved
`011` = Reserved
`010` = Timer3 compare ends sampling and starts conversion
`001` = Active transition on INT0 pin ends sampling and starts conversion
`000` = Clearing SAMP bit ends sampling and starts conversion

bit 4-3 **Unimplemented:** Read as ‘`0`’

bit 2 **ASAM:** A/D Sample Auto-Start bit
`1` = Sampling begins immediately after last conversion completes; SAMP bit is auto-set
`0` = Sampling begins when SAMP bit is set

bit 1 **SAMP:** A/D Sample Enable bit
`1` = A/D sample/hold amplifier is sampling input
`0` = A/D sample/hold amplifier is holding

bit 0 **DONE:** A/D Conversion Status bit
`1` = A/D conversion is done
`0` = A/D conversion is not done

Note 1: Values of ADC1BUFn registers will not retain their values once the ADON bit is cleared. Read out the conversion values from the buffer before disabling the module.

REGISTER 19-2: AD1CON2: A/D CONTROL REGISTER 2

R/W-0	R/W-0	R/W-0	R/W-0	U-0	R/W-0	U-0	U-0
VCFG2	VCFG1	VCFG0	OFFCAL(1)	—	CSCNA	—	—
bit 15							bit 8

R-0, HSC	U-0	R/W-0	R/W-0	R/W-0	R/W-0	R/W-0	R/W-0
BUFS	—	SMPI3	SMPI2	SMPI1	SMPI0	BUFM	ALTS
bit 7							bit 0

Legend:	U = Unimplemented bit, read as ‘0’		HSC = Hardware Settable/Clearable bit
R = Readable bit	W = Writable bit	r = Reserved bit’	
-n = Value at POR	‘1’ = Bit is set	‘0’ = Bit is cleared	x = Bit is unknown

bit 15-13 **VCFG<2:0>:** Voltage Reference Configuration bits

VCFG<2:0>	VR+	VR-
000	AVDD	AVSS
001	External VREF+ pin	AVSS
010	AVDD	External VREF- pin
011	External VREF+ pin	External VREF- pin
1xx	AVDD	AVSS

bit 12 **OFFCAL:** Offset Calibration bit(1)
1 = Converts to get the offset calibration value
0 = Coverts to get the actual input value

bit 11 **Unimplemented:** Read as ‘0’

bit 10 **CSCNA:** Scan Input Selections for CH0+ S/H Input for MUX A Input Multiplexer Setting bit
1 = Scan inputs
0 = Do not scan inputs

bit 9-8 **Unimplemented:** Read as ‘0’

bit 7 **BUFS:** Buffer Fill Status bit (valid only when BUFM = 1)
1 = A/D is currently filling buffer, 08-0F, user should access data in 00-07
0 = A/D is currently filling buffer, 00-07, user should access data in 08-0F

bit 6 **Unimplemented:** Read as ‘0’

bit 5-2 **SMPI<3:0>:** Sample/Convert Sequences Per Interrupt Selection bits
1111 = Interrupts at the completion of conversion for each 16th sample/convert sequence
1110 = Interrupts at the completion of conversion for each 15th sample/convert sequence
.
.
.
0001 = Interrupts at the completion of conversion for each 2nd sample/convert sequence
0000 = Interrupts at the completion of conversion for each sample/convert sequence

bit 1 **BUFM:** Buffer Mode Select bit
1 = Buffer configured as two 8-word buffers (ADC1BUFn<15:8> and ADC1BUFn<7:0>)
0 = Buffer configured as one 16-word buffer (ADC1BUFn<15:0>)

bit 0 **ALTS:** Alternate Input Sample Mode Select bit
1 = Uses MUX A input multiplexer settings for first sample, then alternates between MUX B and MUX A input multiplexer settings for all subsequent samples
0 = Always uses MUX A input multiplexer settings

Note 1: When the OFFCAL bit is set, inputs are disconnected and tied to AVSS. This sets the inputs of the A/D to zero. Then, the user can perform a conversion. Use of the Calibration mode is not affected by AD1PCFG contents nor channel input selection. Any analog input switches are disconnected from the A/D converter in this mode. The conversion result is stored by the user software and used to compensate subsequent conversions. This can be done by adding the two’s complement of the result obtained with the OFFCAL bit set to all normal A/D conversions.

 © 2009 Microchip Technology Inc.

REGISTER 19-3: AD1CON3: A/D CONTROL REGISTER 3

R/W-0	U-0	U-0	R/W-0	R/W-0	R/W-0	R/W-0	R/W-0
ADRC	—	—	SAMC4	SAMC3	SAMC2	SAMC1	SAMC0
bit 15							bit 8

U-0	U-0	R/W-0	R/W-0	R/W-0	R/W-0	R/W-0	R/W-0
—	—	ADCS5	ADCS4	ADCS3	ADCS2	ADCS1	ADCS0
bit 7							bit 0

Legend:	r = Reserved bit		
R = Readable bit	W = Writable bit	U = Unimplemented bit, read as ‘0’	
-n = Value at POR	‘1’ = Bit is set	‘0’ = Bit is cleared	x = Bit is unknown

bit 15 **ADRC:** A/D Conversion Clock Source bit
`1` = A/D internal RC clock
`0` = Clock derived from system clock

bit 14-13 **Unimplemented:** Read as ‘`0`’

bit 12-8 **SAMC<4:0>:** Auto-Sample Time bits
`11111` = 31 TAD
.
.
.
`00001` = 1 TAD
`00000` = 0 TAD (not recommended)

bit 7-6 **Unimplemented:** Read as ‘`0`’

bit 5-0 **ADCS<5:0>:** A/D Conversion Clock Select bits
`111111` = 32 • TCY
.
.
.
`000001` = TCY
`000000` = TCY/2

REGISTER 19-4: AD1CHS: A/D INPUT SELECT REGISTER

R/W-0	U-0	U-0	U-0	R/W-0	R/W-0	R/W-0	R/W-0
CH0NB	—	—	—	CH0SB3	CH0SB2	CH0SB1	CH0SB0
bit 15							bit 8

R/W-0	U-0	U-0	R/W-0	R/W-0	R/W-0	R/W-0	R/W-0
CH0NA	—	—	CH0SA4	CH0SA3	CH0SA2	CH0SA1	CH0SA0
bit 7							bit 0

Legend:			
R = Readable bit	W = Writable bit	U = Unimplemented bit, read as ‘0’	
-n = Value at POR	‘1’ = Bit is set	‘0’ = Bit is cleared	x = Bit is unknown

bit 15 **CH0NB:** Channel 0 Negative Input Select for MUX B Multiplexer Setting bit
1 = Channel 0 negative input is AN1
0 = Channel 0 negative input is V_{R-}

bit 14-12 **Unimplemented:** Read as ‘0’

bit 11-8 **CH0SB<3:0>:** Channel 0 Positive Input Select for MUX B Multiplexer Setting bits
1111 = Channel 0 positive input is band gap reference (V_{BG})
1110 = Channel 0 positive input is band gap, divided by two, reference ($V_{BG}/2$)
1101 = No channels connected (actual ADC MUX switch activates but input floats); used for CTMU
1100 = Channel 0 positive input is AN12
1011 = Channel 0 positive input is AN11
1010 = Channel 0 positive input is AN10
1001 = Reserved
1000 = Reserved
0110 = AV_{DD}
0110 = AV_{SS}
0101 = Channel 0 positive input is AN5
0100 = Channel 0 positive input is AN4
0010 = Channel 0 positive input is AN3
0010 = Channel 0 positive input is AN2
0001 = Channel 0 positive input is AN1
0000 = Channel 0 positive input is AN0

bit 7 **CH0NA:** Channel 0 Negative Input Select for MUX A Multiplexer Setting bit
1 = Channel 0 negative input is AN1
0 = Channel 0 negative input is V_{R-}

bit 6-5 **Unimplemented:** Read as ‘0’

bit 4-0 **CH0SA<4:0>:** Channel 0 Positive Input Select for Sample A bits
1111 = Channel 0 positive input is band gap reference (V_{BG})
1110 = Channel 0 positive input is band gap, divided by two, reference ($V_{BG}/2$)
1101 = No channels connected (actual ADC MUX switch activates but input floats); used for CTMU
1100 = Channel 0 positive input is AN12
1011 = Channel 0 positive input is AN11
1010 = Channel 0 positive input is AN10
1001 = Reserved
1000 = Reserved
0110 = AV_{DD}
0110 = AV_{SS}
0101 = Channel 0 positive input is AN5
0100 = Channel 0 positive input is AN4
0010 = Channel 0 positive input is AN3
0010 = Channel 0 positive input is AN2
0001 = Channel 0 positive input is AN1
0000 = Channel 0 positive input is AN0

 © 2009 Microchip Technology Inc.

REGISTER 19-5: AD1PCFG: A/D PORT CONFIGURATION REGISTER

U-0	U-0	U-0	R/W-0	R/W-0	R/W-0	U-0	U-0
—	—	—	PCFG12	PCFG11	PCFG10	—	—
bit 15							bit 8

U-0	U-0	R/W-0	R/W-0	R/W-0	R/W-0	R/W-0	R/W-0
—	—	PCFG5	PCFG4	PCFG3	PCFG2	PCFG1	PCFG0
bit 7							bit 0

Legend:			
R = Readable bit	W = Writable bit	U = Unimplemented bit, read as ‘0’	
-n = Value at POR	‘1’ = Bit is set	‘0’ = Bit is cleared	x = Bit is unknown

bit 15-13 **Unimplemented:** Read as ‘0’

bit 12-10 **PCFG<12:10>:** Analog Input Pin Configuration Control bits
1 = Pin for corresponding analog channel is configured in Digital mode; I/O port read enabled
0 = Pin configured in Analog mode; I/O port read disabled; A/D samples pin voltage

bit 9-6 **Unimplemented:** Read as ‘0’

bit 5-0 **PCFG<5:0>:** Analog Input Pin Configuration Control bits
1 = Pin for corresponding analog channel is configured in Digital mode; I/O port read enabled
0 = Pin configured in Analog mode; I/O port read disabled; A/D samples pin voltage

REGISTER 19-6: AD1CSSL: A/D INPUT SCAN SELECT REGISTER (LOW)

U-0	U-0	U-0	R/W-0	R/W-0	R/W-0	R/W-0	R/W-0
—	—	—	CSSL12	CSSL11	CSSL10	—	—
bit 15							bit 8

U-0	U-0	R/W-0	R/W-0	R/W-0	R/W-0	R/W-0	R/W-0
—	—	CSSL5	CSSL4	CSSL3	CSSL2	CSSL1	CSSL0
bit 7							bit 0

Legend:			
R = Readable bit	W = Writable bit	U = Unimplemented bit, read as ‘0’	
-n = Value at POR	‘1’ = Bit is set	‘0’ = Bit is cleared	x = Bit is unknown

bit 15-13 **Unimplemented:** Read as ‘0’

bit 12-10 **CSSL<12:10>:** A/D Input Pin Scan Selection bits
1 = Corresponding analog channel selected for input scan
0 = Analog channel omitted from input scan

bit 9-6 **Unimplemented:** Read as ‘0’

bit 5-0 **CSSL<5:0>:** A/D Input Pin Scan Selection bits
1 = Corresponding analog channel selected for input scan
0 = Analog channel omitted from input scan

EQUATION 19-1: A/D CONVERSION CLOCK PERIOD(1)

$$ADCS = \frac{T_{AD}}{T_{CY}} - 1$$

$$T_{AD} = T_{CY} \cdot (ADCS + 1)$$

Note 1: Based on T_{CY} = 2 * T_{OSC}, Doze mode and PLL are disabled.

FIGURE 19-2: 10-BIT A/D CONVERTER ANALOG INPUT MODEL

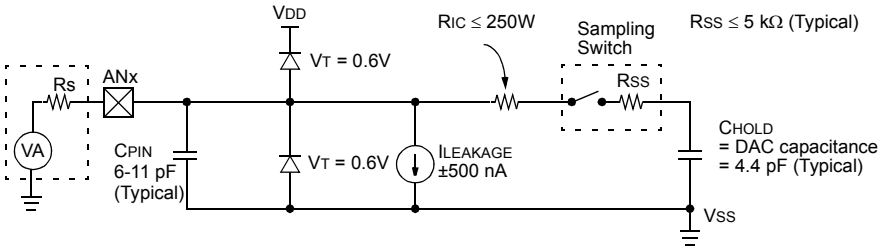

Legend:	C_{PIN}	= Input Capacitance
	V_T	= Threshold Voltage
	$I_{LEAKAGE}$	= Leakage Current at the pin due to various junctions
	R_{IC}	= Interconnect Resistance
	R_{SS}	= Sampling Switch Resistance
	C_{HOLD}	= Sample/Hold Capacitance (from DAC)

Note: C_{PIN} value depends on device package and is not tested. Effect of C_{PIN} negligible if Rs ≤ 5 kΩ.

 © 2009 Microchip Technology Inc.

FIGURE 19-3: A/D TRANSFER FUNCTION

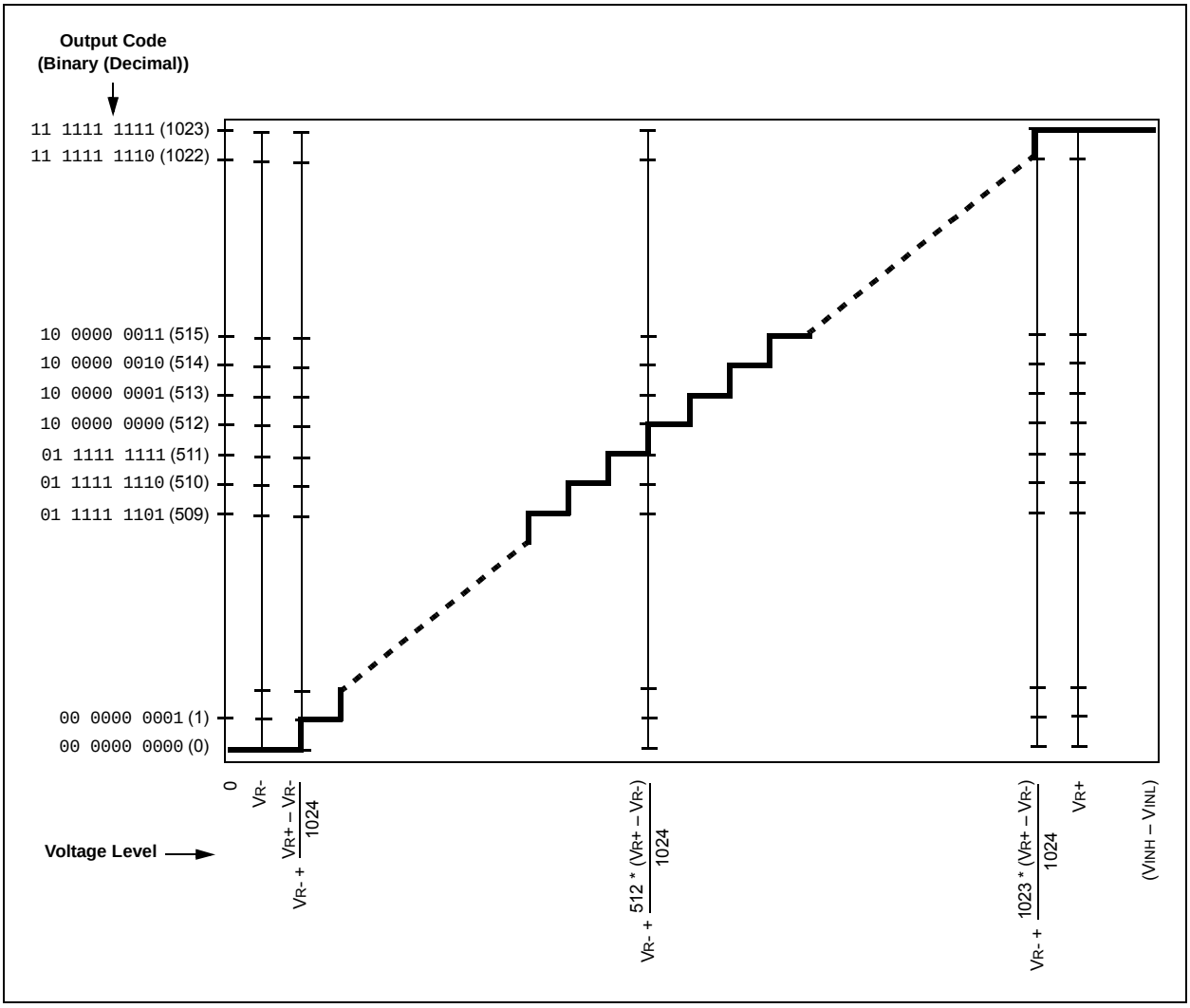

NOTES:

 © 2009 Microchip Technology Inc.

20.0 COMPARATOR MODULE

Note:	This data sheet summarizes the features of this group of PIC24F devices. It is not intended to be a comprehensive reference source. For more information on the Comparator module, refer to the *"PIC24F Family Reference Manual"*, **Section 19. "Comparator Module"** (DS39710).

The comparator module provides two dual input comparators. The inputs to the comparator can be configured to use any one of four external analog inputs, as well as a voltage reference input from either the internal band gap reference divided by 2 ($V_{BG}/2$) or the comparator voltage reference generator.

The comparator outputs may be directly connected to the CxOUT pins. When the respective COE equals '1', the I/O pad logic makes the unsynchronized output of the comparator available on the pin.

A simplified block diagram of the module is displayed in Figure 20-1. Diagrams of the possible individual comparator configurations are displayed in Figure 20-2.

Each comparator has its own control register, CMxCON (Register 20-1), for enabling and configuring its operation. The output and event status of all three comparators is provided in the CMSTAT register (Register 20-2).

FIGURE 20-1: COMPARATOR MODULE BLOCK DIAGRAM

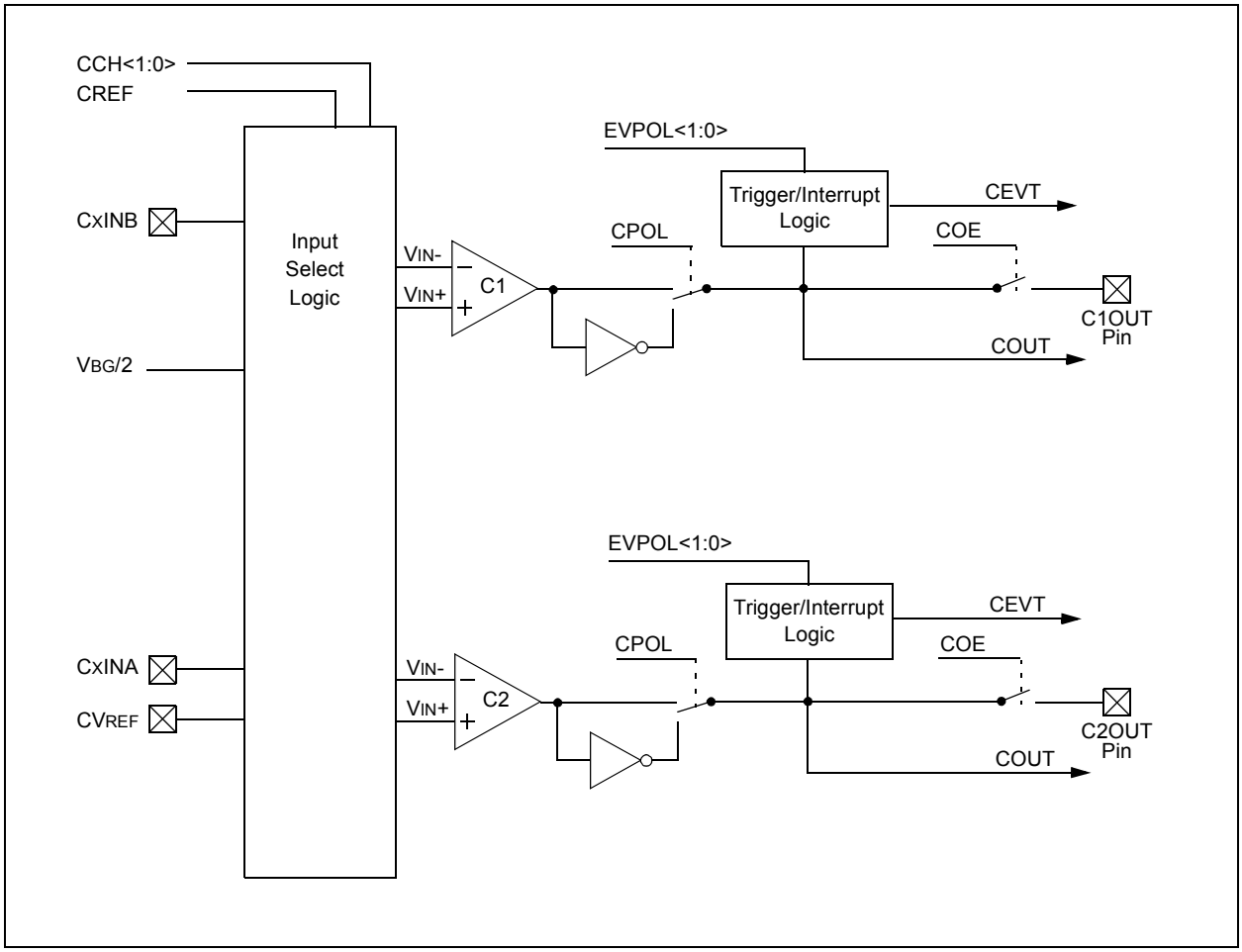

FIGURE 20-2: INDIVIDUAL COMPARATOR CONFIGURATIONS

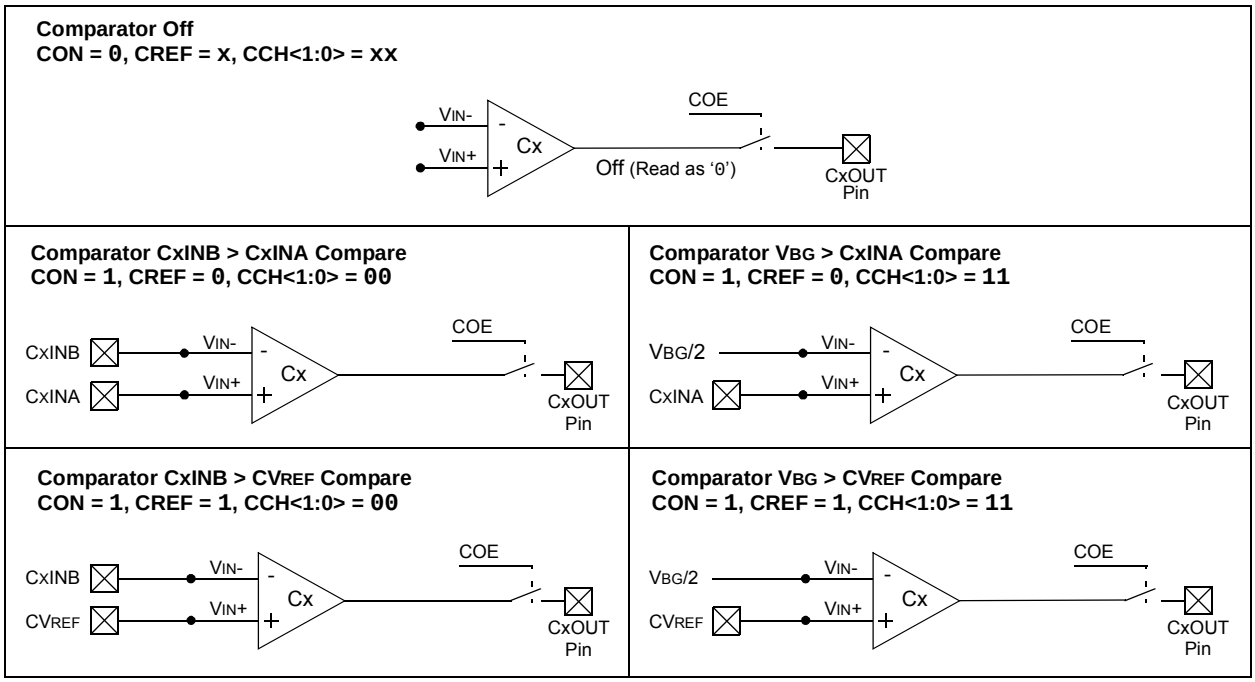

 © 2009 Microchip Technology Inc.

REGISTER 20-1: CMxCON: COMPARATOR x CONTROL REGISTERS

R/W-0	R/W-0	R/W-0	R/W-0	U-0	U-0	R/W-0	R-0
CON	COE	CPOL	CLPWR	—	—	CEVT	COUT
bit 15							bit 8

R/W-0	R/W-0	U-0	R/W-0	U-0	U-0	R/W-0	R/W-0
EVPOL1	EVPOL0	—	CREF	—	—	CCH1	CCH0
bit 7							bit 0

Legend:			
R = Readable bit	W = Writable bit	U = Unimplemented bit, read as ‘0’	
-n = Value at POR	‘1’ = Bit is set	‘0’ = Bit is cleared	x = Bit is unknown

bit 15 **CON:** Comparator Enable bit
1 = Comparator is enabled
0 = Comparator is disabled

bit 14 **COE:** Comparator Output Enable bit
1 = Comparator output is present on the CxOUT pin
0 = Comparator output is internal only

bit 13 **CPOL:** Comparator Output Polarity Select bit
1 = Comparator output is inverted
0 = Comparator output is not inverted

bit 12 **CLPWR:** Comparator Low-Power Mode Select bit
1 = Comparator operates in Low-Power mode
0 = Comparator does not operate in Low-Power mode

bit 11-10 **Unimplemented:** Read as ‘0’

bit 9 **CEVT:** Comparator Event bit
1 = Comparator event defined by EVPOL<1:0> has occurred; subsequent triggers and interrupts are disabled until the bit is cleared
0 = Comparator event has not occurred

bit 8 **COUT:** Comparator Output bit
When CPOL = 0:
1 = $V_{IN+} > V_{IN-}$
0 = $V_{IN+} < V_{IN-}$
When CPOL = 1:
1 = $V_{IN+} < V_{IN-}$
0 = $V_{IN+} > V_{IN-}$

bit 7-6 **EVPOL<1:0>:** Trigger/Event/Interrupt Polarity Select bits
11 = Trigger/event/interrupt generated on any change of the comparator output (while CEVT = 0)
10 = Trigger/event/interrupt generated on transition of the comparator output:
If CPOL = 0 (non-inverted polarity):
High-to-low transition only.
If CPOL = 1 (inverted polarity):
Low-to-high transition only.
01 = Trigger/event/interrupt generated on transition of comparator output:
If CPOL = 0 (non-inverted polarity):
Low-to-high transition only.
If CPOL = 1 (inverted polarity):
High-to-low transition only.
00 = Trigger/event/interrupt generation is disabled

bit 5 **Unimplemented:** Read as ‘0’

bit 4 **CREF:** Comparator Reference Select bits (non-inverting input)
1 = Non-inverting input connects to internal CV_{REF} voltage
0 = Non-inverting input connects to CxINA pin

bit 3-2 **Unimplemented:** Read as ‘0’

bit 1-0 **CCH<1:0>:** Comparator Channel Select bits
11 = Inverting input of comparator connects to $V_{BG}/2$
00 = Inverting input of comparator connects to CxINB pin

REGISTER 20-2: CMSTAT: COMPARATOR MODULE STATUS REGISTER

R/W-0	U-0	U-0	U-0	U-0	U-0	R-0, HSC	R-0, HSC
CMIDL	—	—	—	—	—	C2EVT	C1EVT
bit 15							bit 8

U-0	U-0	U-0	U-0	U-0	U-0	R-0, HSC	R-0, HSC
—	—	—	—	—	—	C2OUT	C1OUT
bit 7							bit 0

Legend:	HSC = Hardware Settable/Clearable bit		
R = Readable bit	W = Writable bit	U = Unimplemented bit, read as ‘0’	
-n = Value at POR	‘1’ = Bit is set	‘0’ = Bit is cleared	x = Bit is unknown

bit 15 **CMIDL:** Comparator Stop in Idle Mode bit
`1` = When device enters Idle mode, the module does not generate interrupts; it is still enabled
`0` = Continue operation of all enabled comparators in Idle mode

bit 14-10 **Unimplemented:** Read as ‘`0`’

bit 9 **C2EVT:** Comparator 2 Event Status bit (read-only)
Shows the current event status of Comparator 2 (CM2CON<9>).

bit 8 **C1EVT:** Comparator 1 Event Status bit (read-only)
Shows the current event status of Comparator 1 (CM1CON<9>).

bit 7-2 **Unimplemented:** Read as ‘`0`’

bit 1 **C2OUT:** Comparator 2 Output Status bit (read-only)
Shows the current output of Comparator 2 (CM2CON<8>).

bit 0 **C1OUT:** Comparator 1 Output Status bit (read-only)
Shows the current output of Comparator 1 (CM1CON<8>).

 © 2009 Microchip Technology Inc.

21.0 COMPARATOR VOLTAGE REFERENCE

Note: This data sheet summarizes the features of this group of PIC24F devices. It is not intended to be a comprehensive reference source. For more information on the Comparator Voltage Reference, refer to the *"PIC24F Family Reference Manual"*, **Section 20. "Comparator Voltage Reference Module"** (DS39709).

21.1 Configuring the Comparator Voltage Reference

The comparator voltage reference module is controlled through the CVRCON register (Register 21-1). The comparator voltage reference provides two ranges of output voltage, each with 16 distinct levels. The range to be used is selected by the CVRR bit (CVRCON<5>). The primary difference between the ranges is the size of the steps selected by the CVREF Selection bits (CVR<3:0>), with one range offering finer resolution.

The comparator reference supply voltage can come from either VDD and VSS, or the external VREF+ and VREF-. The voltage source is selected by the CVRSS bit (CVRCON<4>).

The settling time of the comparator voltage reference must be considered when changing the CVREF output.

FIGURE 21-1: COMPARATOR VOLTAGE REFERENCE BLOCK DIAGRAM

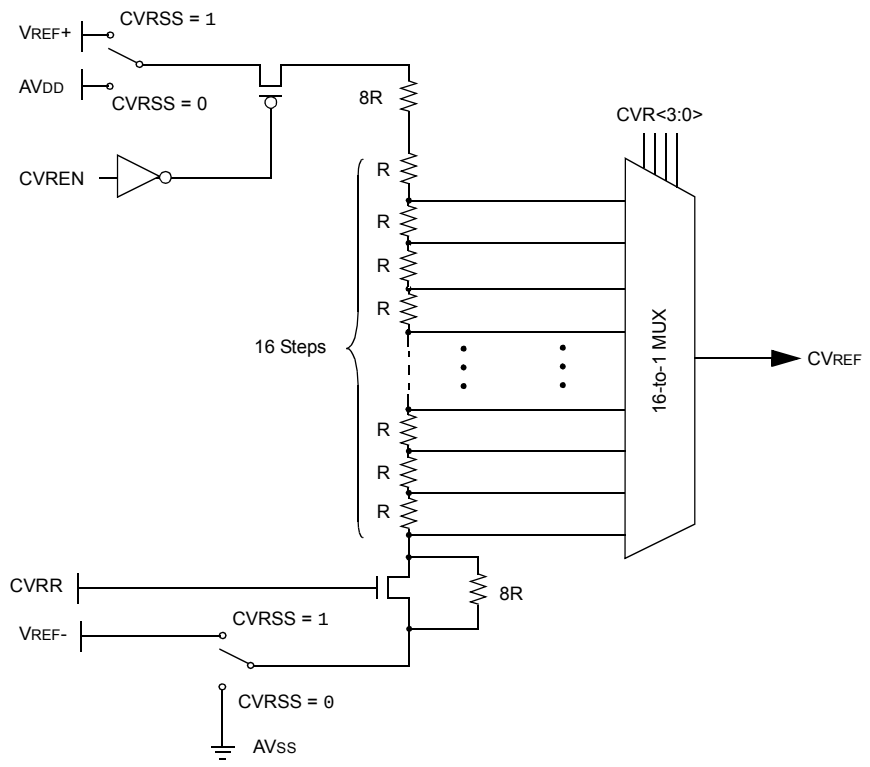

REGISTER 21-1: CVRCON: COMPARATOR VOLTAGE REFERENCE CONTROL REGISTER

U-0	U-0	U-0	U-0	U-0	U-0	U-0	U-0
—	—	—	—	—	—	—	—
bit 15							bit 8

R/W-0	R/W-0	R/W-0	R/W-0	R/W-0	R/W-0	R/W-0	R/W-0
CVREN	CVROE	CVRR	CVRSS	CVR3	CVR2	CVR1	CVR0
bit 7							bit 0

Legend:			
R = Readable bit	W = Writable bit	U = Unimplemented bit, read as ‘0’	
-n = Value at POR	‘1’ = Bit is set	‘0’ = Bit is cleared	x = Bit is unknown

bit 15-8 **Unimplemented:** Read as ‘0’

bit 7 **CVREN:** Comparator Voltage Reference Enable bit
1 = CV_{REF} circuit powered on
0 = CV_{REF} circuit powered down

bit 6 **CVROE:** Comparator V_{REF} Output Enable bit
1 = CV_{REF} voltage level is output on CV_{REF} pin
0 = CV_{REF} voltage level is disconnected from CV_{REF} pin

bit 5 **CVRR:** Comparator V_{REF} Range Selection bit
1 = CV_{RSRC} range should be 0 to 0.625 CV_{RSRC} with $CV_{RSRC}/24$ step size
0 = CV_{RSRC} range should be 0.25 to 0.719 CV_{RSRC} with $CV_{RSRC}/32$ step size

bit 4 **CVRSS:** Comparator V_{REF} Source Selection bit
1 = Comparator reference source $CV_{RSRC} = V_{REF+} – V_{REF-}$
0 = Comparator reference source $CV_{RSRC} = AV_{DD} – AV_{SS}$

bit 3-0 **CVR3:CVR0:** Comparator V_{REF} Value Selection $0 \le CVR<3:0> \le 15$ bits

When CVRR = 1 and CVRSS = 0:
$CV_{REF} = (CVR<3:0>/24) * (CV_{RSRC})$

When CVRR = 0 and CVRSS = 0:
$CV_{REF} = 1/4 (CV_{RSRC}) + (CVR<3:0>/32) * (CV_{RSRC})$

When CVRR = 1 and CVRSS = 1:
$CV_{REF} = ((CVR<3:0>/24) * (CV_{RSRC})) + V_{REF-}$

When CVRR = 0 and CVRSS = 1:
$CV_{REF} = (1/4 (CV_{RSRC}) + (CVR<3:0>/32) * (CV_{RSRC})) + V_{REF-}$

 © 2009 Microchip Technology Inc.

22.0 CHARGE TIME MEASUREMENT UNIT (CTMU)

Note:	This data sheet summarizes the features of this group of PIC24F devices. It is not intended to be a comprehensive reference source. For more information on the Charge Measurement Unit, refer to the *"PIC24F Family Reference Manual"*, **Section 11. "Charge Time Measurement Unit (CTMU)"** (DS39724).

The Charge Time Measurement Unit (CTMU) is a flexible analog module that provides charge measurement, accurate differential time measurement between pulse sources and asynchronous pulse generation. Its key features include:

- Four edge input trigger sources
- Polarity control for each edge source
- Control of edge sequence
- Control of response to edges
- Time measurement resolution of one nanosecond
- Accurate current source suitable for capacitive measurement

Together with other on-chip analog modules, the CTMU can be used to precisely measure time, measure capacitance, measure relative changes in capacitance, or generate output pulses that are independent of the system clock. The CTMU module is ideal for interfacing with capacitive-based touch sensors.

The CTMU is controlled through two registers, CTMUCON and CTMUICON. CTMUCON enables the module, and controls edge source selection, edge source polarity selection, and edge sequencing. The CTMUICON register selects the current range of current source and trims the current.

22.1 Measuring Capacitance

The CTMU module measures capacitance by generating an output pulse with a width equal to the time between edge events on two separate input channels. The pulse edge events to both input channels can be selected from four sources: two internal peripheral modules (OC1 and Timer1) and two external pins (CTEDG1 and CTEDG2). This pulse is used with the module's precision current source to calculate capacitance according to the relationship:

$$C = I \cdot \frac{dV}{dT}$$

For capacitance measurements, the A/D Converter samples an external capacitor (CAPP) on one of its input channels after the CTMU output's pulse. A precision resistor (RPR) provides current source calibration on a second A/D channel. After the pulse ends, the converter determines the voltage on the capacitor. The actual calculation of capacitance is performed in software by the application.

Figure 22-1 displays the external connections used for capacitance measurements, and how the CTMU and A/D modules are related in this application. This example also shows the edge events coming from Timer1, but other configurations using external edge sources are possible. A detailed discussion on measuring capacitance and time with the CTMU module is provided in the "*PIC24F Family Reference Manual*".

FIGURE 22-1: TYPICAL CONNECTIONS AND INTERNAL CONFIGURATION FOR CAPACITANCE MEASUREMENT

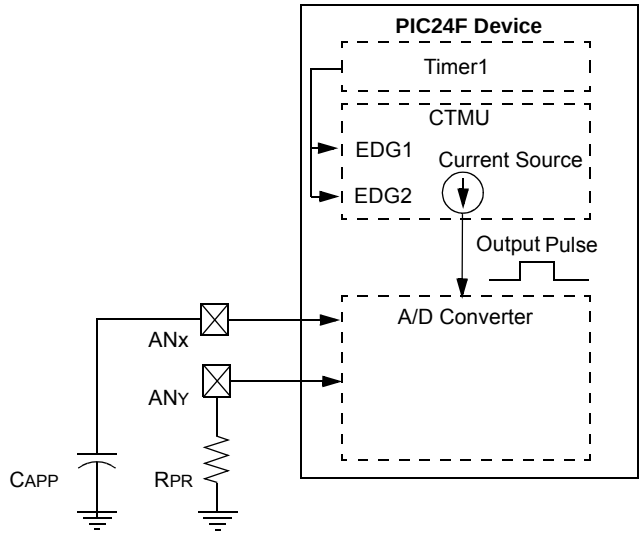

22.2 Measuring Time

Time measurements on the pulse width can be similarly performed using the A/D module's internal capacitor (C_{AD}) and a precision resistor for current calibration. Figure 22-2 displays the external connections used for time measurements, and how the CTMU and A/D modules are related in this application. This example also shows both edge events coming from the external CTEDG pins, but other configurations using internal edge sources are possible.

22.3 Pulse Generation and Delay

The CTMU module can also generate an output pulse with edges that are not synchronous with the device's system clock. More specifically, it can generate a pulse with a programmable delay from an edge event input to the module.

When the module is configured for pulse generation delay by setting the TGEN bit (CTMUCON<12>), the internal current source is connected to the B input of Comparator 2. A capacitor (C_{DELAY}) is connected to the Comparator 2 pin, C2INB, and the comparator voltage reference, CV_{REF}, is connected to C2INA. CV_{REF} is then configured for a specific trip point. The module begins to charge C_{DELAY} when an edge event is detected. When C_{DELAY} charges above the CV_{REF} trip point, a pulse is output on CTPLS. The length of the pulse delay is determined by the value of C_{DELAY} and the CV_{REF} trip point.

Figure 22-3 shows the external connections for pulse generation, as well as the relationship of the different analog modules required. While CTEDG1 is shown as the input pulse source, other options are available. A detailed discussion on pulse generation with the CTMU module is provided in the "*PIC24F Family Reference Manual*".

FIGURE 22-2: TYPICAL CONNECTIONS AND INTERNAL CONFIGURATION FOR TIME MEASUREMENT

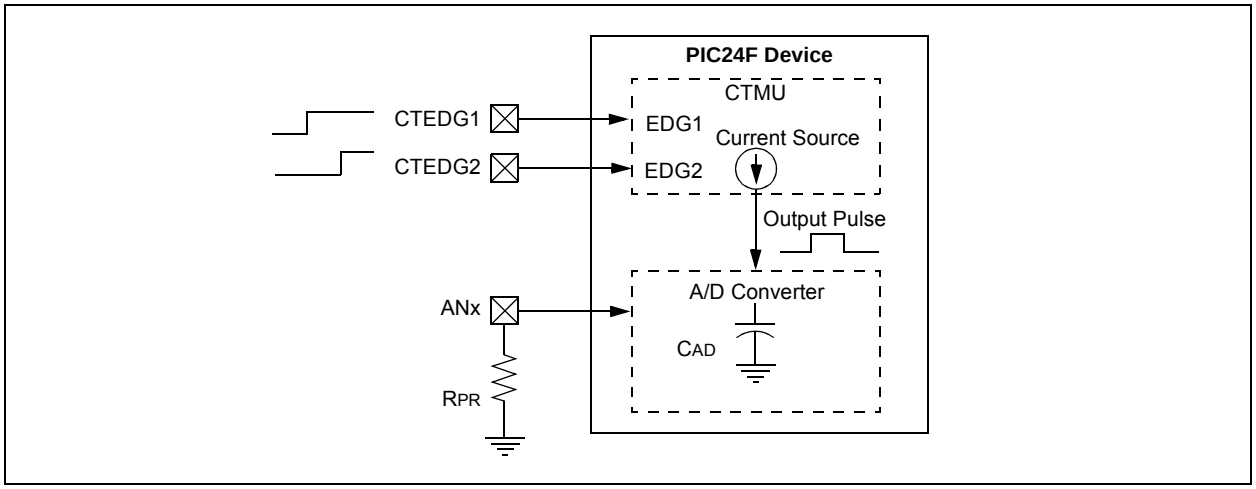

FIGURE 22-3: TYPICAL CONNECTIONS AND INTERNAL CONFIGURATION FOR PULSE DELAY GENERATION

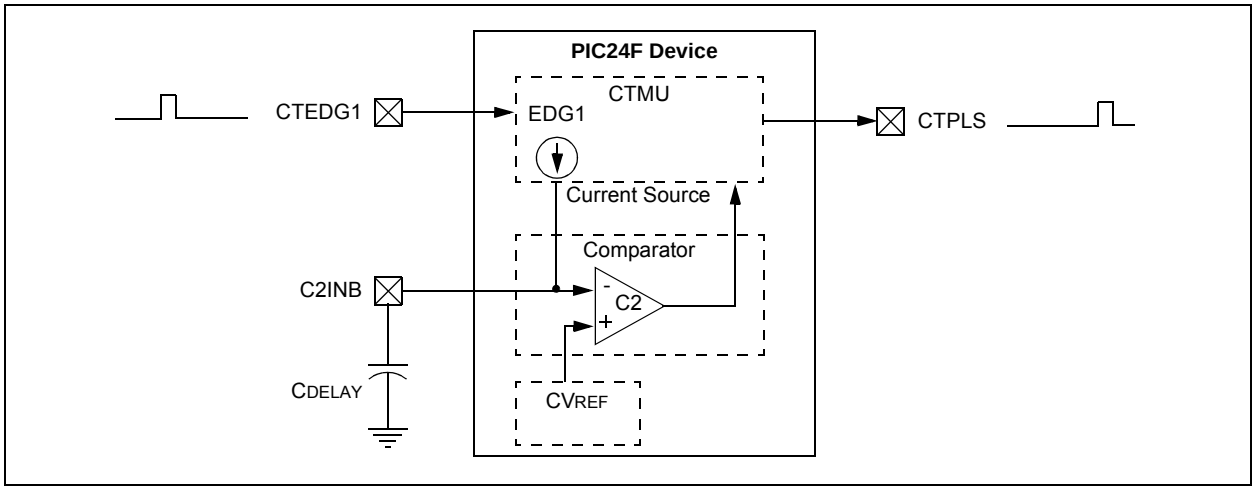

 © 2009 Microchip Technology Inc.

REGISTER 22-1: CTMUCON: CTMU CONTROL REGISTER

R/W-0	U-0	R/W-0	R/W-0	R/W-0	R/W-0	R/W-0	R/W-0
CTMUEN	—	CTMUSIDL	TGEN	EDGEN	EDGSEQEN	IDISSEN	CTTRIG
bit 15							bit 8

R/W-0	R/W-0	R/W-0	R/W-0	R/W-0	R/W-0	R/W-0	R/W-0
EDG2POL	EDG2SEL1	EDG2SEL0	EDG1POL	EDG1SEL1	EDG1SEL0	EDG2STAT	EDG1STAT
bit 7							bit 0

Legend:			
R = Readable bit	W = Writable bit	U = Unimplemented bit, read as ‘0’	
-n = Value at POR	‘1’ = Bit is set	‘0’ = Bit is cleared	x = Bit is unknown

bit 15 **CTMUEN:** CTMU Enable bit
1 = Module is enabled
0 = Module is disabled

bit 14 **Unimplemented:** Read as ‘0’

bit 13 **CTMUSIDL:** Stop in Idle Mode bit
1 = Discontinue module operation when device enters Idle mode
0 = Continue module operation in Idle mode

bit 12 **TGEN:** Time Generation Enable bit
1 = Enables edge delay generation
0 = Disables edge delay generation

bit 10 **EDGEN:** Edge Enable bit
1 = Edges are not blocked
0 = Edges are blocked

bit 10 **EDGSEQEN:** Edge Sequence Enable bit
1 = Edge 1 event must occur before Edge 2 event can occur
0 = No edge sequence is needed

bit 9 **IDISSEN:** Analog Current Source Control bit
1 = Analog current source output is grounded
0 = Analog current source output is not grounded

bit 8 **CTTRIG:** Trigger Control bit
1 = Trigger output is enabled
0 = Trigger output is disabled

bit 7 **EDG2POL:** Edge 2 Polarity Select bit
1 = Edge 2 programmed for a positive edge response
0 = Edge 2 programmed for a negative edge response

bit 6-5 **EDG2SEL<1:0>:** Edge 2 Source Select bits
11 = CTED1 pin
10 = CTED2 pin
01 = OC1 module
00 = Timer1 module

bit 4 **EDG1POL:** Edge 1 Polarity Select bit
1 = Edge 1 programmed for a positive edge response
0 = Edge 1 programmed for a negative edge response

REGISTER 22-1: CTMUCON: CTMU CONTROL REGISTER (CONTINUED)

bit 3-2 **EDG1SEL<1:0>:** Edge 1 Source Select bits
11 = CTED1 pin
10 = CTED2 pin
01 = OC1 module
00 = Timer1 module

bit 1 **EDG2STAT:** Edge 2 Status bit
1 = Edge 2 event has occurred
0 = Edge 2 event has not occurred

bit 0 **EDG1STAT:** Edge 1 Status bit
1 = Edge 1 event has occurred
0 = Edge 1 event has not occurred

REGISTER 22-2: CTMUICON: CTMU CURRENT CONTROL REGISTER

R/W-0	R/W-0	R/W-0	R/W-0	R/W-0	R/W-0	R/W-0	R/W-0
ITRIM5	ITRIM4	ITRIM3	ITRIM2	ITRIM1	ITRIM0	IRNG1	IRNG0
bit 15							bit 8

U-0	U-0	U-0	U-0	U-0	U-0	U-0	U-0
—	—	—	—	—	—	—	—
bit 7							bit 0

Legend:			
R = Readable bit	W = Writable bit	U = Unimplemented bit, read as ‘0’	
-n = Value at POR	‘1’ = Bit is set	‘0’ = Bit is cleared	x = Bit is unknown

bit 15-10 **ITRIM<5:0>:** Current Source Trim bits
011111 = Maximum positive change from nominal current
011110
.
.
.
000001 = Minimum positive change from nominal current
000000 = Nominal current output specified by IRNG<1:0>
111111 = Minimum negative change from nominal current
.
.
.
100010
100001 = Maximum negative change from nominal current

bit 9-8 **IRNG<1:0>:** Current Source Range Select bits
11 = 100 × Base current
10 = 10 × Base current
01 = Base current level (0.55 μA nominal)
00 = Current source disabled

bit 7-0 **Unimplemented:** Read as ‘0’

 © 2009 Microchip Technology Inc.

23.0 SPECIAL FEATURES

Note: This data sheet summarizes the features of this group of PIC24F devices. It is not intended to be a comprehensive reference source. For more information on the Watchdog Timer, High-Level Device Integration and Programming Diagnostics, refer to the individual sections of the *"PIC24F Family Reference Manual" provided below*:

- **Section 9. "Watchdog Timer (WDT)"** (DS39697)
- **Section 36. "High-Level Integration with Programmable High/Low-Voltage Detect (HLVD)"** (DS39725)
- **Section 33. "Programming and Diagnostics"** (DS39716)

PIC24F04KA201 family devices include several features intended to maximize application flexibility and reliability, and minimize cost through elimination of external components. These are:

- Flexible Configuration
- Watchdog Timer (WDT)
- Code Protection
- In-Circuit Serial Programming™ (ICSP™)
- In-Circuit Emulation

23.1 Configuration Bits

The Configuration bits can be programmed (read as '0'), or left unprogrammed (read as '1'), to select various device configurations. These bits are mapped starting at program memory location, F80000h. A complete list is provided in Table 23-1. A detailed explanation of the various bit functions is provided in Register 23-1 through Register 23-7.

The address, F80000h, is beyond the user program memory space. In fact, it belongs to the configuration memory space (800000h-FFFFFFh), which can only be accessed using table reads and table writes.

TABLE 23-1: CONFIGURATION REGISTERS LOCATIONS

Configuration Register	Address
FGS	F80004
FOSCSEL	F80006
FOSC	F80008
FWDT	F8000A
FPOR	F8000C
FICD	F8000E
FDS	F80010

REGISTER 23-1: FGS: GENERAL SEGMENT CONFIGURATION REGISTER

U-0	U-0	U-0	U-0	U-0	U-0	R/C-1	R/C-1
—	—	—	—	—	—	GSS0	GWRP
bit 7							bit 0

Legend:			
R = Readable bit	C = Clearable bit	U = Unimplemented bit, read as '0'	
-n = Value at POR	'1' = Bit is set	'0' = Bit is cleared	x = Bit is unknown

bit 7-2 **Unimplemented:** Read as '0'

bit 1 **GSS0:** General Segment Code Flash Code Protection bit
1 = No protection
0 = Standard security enabled

bit 0 **GWRP**: General Segment Code Flash Write Protection bit
1 = General segment may be written
0 = General segment is write-protected

REGISTER 23-2: FOSCSEL: OSCILLATOR SELECTION CONFIGURATION REGISTER

R/P-1	U-0	U-0	U-0	U-0	R/P-1	R/P-1	R/P-1
IESO	—	—	—	—	FNOSC2	FNOSC1	FNOSC0
bit 7							bit 0

Legend:			
R = Readable bit	P = Programmable bit	U = Unimplemented bit, read as ‘0’	
-n = Value at POR	‘1’ = Bit is set	‘0’ = Bit is cleared	x = Bit is unknown

bit 7 **IESO:** Internal External Switchover bit
`1` = Internal External Switchover mode enabled (Two-Speed Start-up enabled)
`0` = Internal External Switchover mode disabled (Two-Speed Start-up disabled)

bit 6-3 **Unimplemented:** Read as ‘`0`’

bit 2-0 **FNOSC<2:0>:** Oscillator Selection bits
`000` = Fast RC oscillator (FRC)
`001` = Fast RC oscillator with divide-by-N with PLL module (FRCDIV+PLL)
`010` = Primary oscillator (XT, HS, EC)
`011` = Primary oscillator with PLL module (HS+PLL, EC+PLL)
`100` = Secondary oscillator (SOSC)
`101` = Low-Power RC oscillator (LPRC)
`110` = 500 kHz Low-Power FRC oscillator with divide-by-N (LPFRCDIV)
`111` = 8 MHz FRC oscillator with divide-by-N (FRCDIV)

 © 2009 Microchip Technology Inc.

REGISTER 23-3: FOSC: OSCILLATOR CONFIGURATION REGISTER

R/P-1	R/P-1	R/P-1	R/P-1	R/P-1	R/P-1	R/P-1	R/P-1
FCKSM1	FCKSM0	SOSCSEL	POSCFREQ1	POSCFREQ0	OSCIOFNC	POSCMD1	POSCMD0
bit 7							bit 0

Legend:			
R = Readable bit	P = Programmable bit	U = Unimplemented bit, read as ‘0’	
-n = Value at POR	‘1’ = Bit is set	‘0’ = Bit is cleared	x = Bit is unknown

bit 7-6 **FCKSM<1:0>:** Clock Switching and Monitor Selection Configuration bits
`1x` = Clock switching is disabled, Fail-Safe Clock Monitor is disabled
`01` = Clock switching is enabled, Fail-Safe Clock Monitor is disabled
`00` = Clock switching is enabled, Fail-Safe Clock Monitor is enabled

bit 5 **SOSCSEL:** Secondary Oscillator Select Bit
`1` = Secondary oscillator configured for high-power operation
`0` = Secondary oscillator configured for low-power operation

bit 4-3 **POSCFREQ<1:0>:** Primary Oscillator Frequency Range Configuration bits
`11` = Primary oscillator/external clock input frequency greater than 8 MHz
`10` = Primary oscillator/external clock input frequency between 100 kHz and 8 MHz
`01` = Primary oscillator/external clock input frequency less than 100 kHz
`00` = Reserved; do not use

bit 2 **OSCIOFNC:** CLKO Enable Configuration bit
`1` = CLKO output signal active on the OSCO pin; primary oscillator must be disabled or configured for the External Clock mode (EC) for the CLKO to be active (POSCMD<1:0> = `11` or `00`)
`0` = CLKO output disabled

bit 1-0 **POSCMD<1:0>:** Primary Oscillator Configuration bits
`11` = Primary oscillator disabled
`10` = HS Oscillator mode selected
`01` = XT Oscillator mode selected
`00` = External Clock mode selected

REGISTER 23-4: FWDT: WATCHDOG TIMER CONFIGURATION REGISTER

R/P-1	R/P-1	U-0	R/P-1	R/P-1	R/P-1	R/P-1	R/P-1
FWDTEN	WINDIS	—	FWPSA	WDTPS3	WDTPS2	WDTPS1	WDTPS0
bit 7							bit 0

Legend:			
R = Readable bit	P = Programmable bit	U = Unimplemented bit, read as ‘0’	
-n = Value at POR	‘1’ = Bit is set	‘0’ = Bit is cleared	x = Bit is unknown

bit 7 **FWDTEN:** Watchdog Timer Enable bit
1 = WDT enabled
0 = WDT disabled (control is placed on the SWDTEN bit)

bit 6 **WINDIS:** Windowed Watchdog Timer Disable bit
1 = Standard WDT selected; windowed WDT disabled
0 = Windowed WDT enabled

bit 5 **Unimplemented:** Read as ‘0’

bit 4 **FWPSA:** WDT Prescaler bit
1 = WDT prescaler ratio of 1:128
0 = WDT prescaler ratio of 1:32

bit 3-0 **WDTPS<3:0>:** Watchdog Timer Postscale Select bits
1111 = 1:32,768
1110 = 1:16,384
1101 = 1:8,192
1100 = 1:4,096
1011 = 1:2,048
1010 = 1:1,024
1001 = 1:512
1000 = 1:256
0111 = 1:128
0110 = 1:64
0101 = 1:32
0100 = 1:16
0011 = 1:8
0010 = 1:4
0001 = 1:2
0000 = 1:1

 © 2009 Microchip Technology Inc.

REGISTER 23-5: FPOR: RESET CONFIGURATION REGISTER

R/P-1	R/P-1	R/P-1	U-0	R/P-1	U-0	R/P-1	R/P-1
MCLRE(1)	BORV1(2)	BORV0(2)	—	PWRTEN	—	BOREN1	BOREN0
bit 7							bit 0

Legend:			
R = Readable bit	P = Programmable bit	U = Unimplemented bit, read as ‘0’	
-n = Value at POR	‘1’ = Bit is set	‘0’ = Bit is cleared	x = Bit is unknown

bit 7 **MCLRE:** $\overline{\text{MCLR}}$ Pin Enable bit(1)
1 = $\overline{\text{MCLR}}$ pin enabled; RA5 input pin disabled
0 = RA5 input pin enabled; $\overline{\text{MCLR}}$ disabled

bit 6-5 **BORV<1:0>:** Brown-out Reset Enable bits(2)
11 = Brown-out Reset set to lowest voltage
10 = Brown-out Reset
01 = Brown-out Reset set to highest voltage
00 = Low-power Brown-out Reset occurs around 2.0V

bit 4 **Unimplemented:** Read as ‘0’

bit 3 **PWRTEN:** Power-up Timer Enable bit
0 = PWRT disabled
1 = PWRT enabled

bit 2 **Unimplemented:** Read as ‘0’

bit 1-0 **BOREN<1:0>:** Brown-out Reset Enable bits
11 = Brown-out Reset enabled in hardware; SBOREN bit disabled
10 = Brown-out Reset enabled only while device is active and disabled in Sleep; SBOREN bit disabled
01 = Brown-out Reset controlled with the SBOREN bit setting
00 = Brown-out Reset disabled in hardware; SBOREN bit disabled

Note 1: The MCLRE fuse can only be changed when using the VPP-Based ICSP™ mode entry. This prevents a user from accidentally locking out the device from the low-voltage test entry.
2: Refer to the electrical specifications for BOR voltages.

REGISTER 23-6: FICD: IN-CIRCUIT DEBUGGER CONFIGURATION REGISTER

U-0	U-0	U-0	U-0	U-0	U-0	R/P-1	R/P-1
—	—	—	—	—	—	FICD1	FICD0
bit 7							bit 0

Legend:			
R = Readable bit	P = Programmable bit	U = Unimplemented bit, read as ‘0’	
-n = Value at POR	‘1’ = Bit is set	‘0’ = Bit is cleared	x = Bit is unknown

bit 7-2 **Unimplemented:** Read as ‘0’

bit 1-0 **FICD<1:0:>** ICD Pin Select bits
10 = PGC2/PGD2 are used for programming the device
01 = PGC3/PGD3 are used for programming the device
00, 11 = Reserved; do not use

REGISTER 23-7: FDS: DEEP SLEEP CONFIGURATION REGISTER

R/P-1	R/P-1	U-0	U-0	R/P-1	R/P-1	R/P-1	R/P-1
DSWDTEN	DSLPBOR	—	—	DSWDTPS3	DSWDTPS2	DSWDTPS1	DSWDTPS0
bit 7							bit 0

Legend:			
R = Readable bit	P = Programmable bit	U = Unimplemented bit, read as ‘0’	
-n = Value at POR	‘1’ = Bit is set	‘0’ = Bit is cleared	x = Bit is unknown

bit 7 **DSWDTEN:** Deep Sleep Watchdog Timer Enable bit
1 = DSWDT enabled
0 = DSWDT disabled

bit 6 **DSLPBOR:** Deep Sleep/Low-Power BOR Enable bit (does not affect operation in non Deep Sleep modes)
1 = Deep Sleep BOR enabled in Deep Sleep
0 = Deep Sleep BOR disabled in Deep Sleep

bit 5-4 **Unimplemented:** Read as ‘0’

bit 3-0 **DSWDTPS<3:0>:** Deep Sleep Watchdog Timer Postscale Select bits
The DSWDT prescaler is 32; this creates an approximate base time unit of 1 ms.
1111 = 1:2,147,483,648 (25.7 days) nominal
1110 = 1:536,870,912 (6.4 days) nominal
1101 = 1:134,217,728 (38.5 hours) nominal
1100 = 1:33,554,432 (9.6 hours) nominal
1011 = 1:8,388,608 (2.4 hours) nominal
1010 = 1:2,097,152 (36 minutes) nominal
1001 = 1:524,288 (9 minutes) nominal
1000 = 1:131,072 (135 seconds) nominal
0111 = 1:32,768 (34 seconds) nominal
0110 = 1:8,192 (8.5 seconds) nominal
0101 = 1:2,048 (2.1 seconds) nominal
0100 = 1:512 (528 ms) nominal
0011 = 1:128 (132 ms) nominal
0010 = 1:32 (33 ms) nominal
0001 = 1:8 (8.3 ms) nominal
0000 = 1:2 (2.1 ms) nominal

 © 2009 Microchip Technology Inc.

REGISTER 23-8: DEVID: DEVICE ID REGISTER

U-0	U-0	U-0	U-0	U-0	U-0	U-0	U-0
—	—	—	—	—	—	—	—
bit 23							bit 16

R	R	R	R	R	R	R	R
FAMID7	FAMID6	FAMID5	FAMID4	FAMID3	FAMID2	FAMID1	FAMID0
bit 15							bit 8

R	R	R	R	R	R	R	R
DEV7	DEV6	DEV5	DEV4	DEV3	DEV2	DEV1	DEV0
bit 7							bit 0

Legend:			
R = Readable bit	W = Writable bit	U = Unimplemented bit, read as ‘0’	
-n = Value at POR	‘1’ = Bit is set	‘0’ = Bit is cleared	x = Bit is unknown

bit 23-16 **Unimplemented:** Read as ‘0’

bit 15-8 **FAMID<7:0>:** Device Family Identifier bits
00001011 = PIC24F04KA201 family

bit 7-0 **DEV<7:0>:** Individual Device Identifier bits
00000000 = PIC24F04KA201
00000010 = PIC24F04KA200

REGISTER 23-9: DEVREV: DEVICE REVISION REGISTER

U-0	U-0	U-0	U-0	U-0	U-0	U-0	U-0
—	—	—	—	—	—	—	—
bit 23							bit 16

U-0	U-0	U-0	U-0	U-0	U-0	U-0	U-0
—	—	—	—	—	—	—	—
bit 15							bit 8

U-0	U-0	U-0	U-0	R	R	R	R
—	—	—	—	REV3	REV2	REV1	REV0
bit 7							bit 0

Legend:			
R = Readable bit	W = Writable bit	U = Unimplemented bit, read as ‘0’	
-n = Value at POR	‘1’ = Bit is set	‘0’ = Bit is cleared	x = Bit is unknown

bit 23-4 **Unimplemented:** Read as ‘0’

bit 3-0 **REV<3:0>:** Minor Revision Identifier bits

23.2 Watchdog Timer (WDT)

For the PIC24F04KA201 family of devices, the WDT is driven by the LPRC oscillator. When the WDT is enabled, the clock source is also enabled.

The nominal WDT clock source from LPRC is 31 kHz. This feeds a prescaler that can be configured for either 5-bit (divide-by-32) or 7-bit (divide-by-128) operation. The prescaler is set by the FWPSA Configuration bit. With a 31 kHz input, the prescaler yields a nominal WDT time-out period (T_{WDT}) of 1 ms in 5-bit mode or 4 ms in 7-bit mode.

A variable postscaler divides down the WDT prescaler output and allows for a wide range of time-out periods. The postscaler is controlled by the Configuration bits, WDTPS<3:0> (FWDT<3:0>), which allow the selection of a total of 16 settings, from 1:1 to 1:32,768. Using the prescaler and postscaler, time-out periods ranging from 1 ms to 131 seconds can be achieved.

The WDT, prescaler and postscaler are reset:

- On any device Reset
- On the completion of a clock switch, whether invoked by software (i.e., setting the OSWEN bit after changing the NOSC bits) or by hardware (i.e., Fail-Safe Clock Monitor)
- When a `PWRSAV` instruction is executed (i.e., Sleep or Idle mode is entered)
- When the device exits Sleep or Idle mode to resume normal operation
- By a `CLRWDT` instruction during normal execution

If the WDT is enabled, it will continue to run during Sleep or Idle modes. When the WDT time-out occurs, the device will wake the device and code execution will continue from where the `PWRSAV` instruction was executed. The corresponding SLEEP or IDLE bits (RCON<3:2>) will need to be cleared in software after the device wakes up.

The WDT Flag bit, WDTO (RCON<4>), is not automatically cleared following a WDT time-out. To detect subsequent WDT events, the flag must be cleared in software.

Note:	The `CLRWDT` and `PWRSAV` instructions clear the prescaler and postscaler counts when executed.

23.2.1 WINDOWED OPERATION

The Watchdog Timer has an optional Fixed Window mode of operation. In this Windowed mode, `CLRWDT` instructions can only reset the WDT during the last 1/4 of the programmed WDT period. A `CLRWDT` instruction executed before that window causes a WDT Reset, similar to a WDT time-out.

Windowed WDT mode is enabled by programming the Configuration bit, WINDIS (FWDT<6>), to '`0`'.

23.2.2 CONTROL REGISTER

The WDT is enabled or disabled by the FWDTEN Configuration bit. When the FWDTEN Configuration bit is set, the WDT is always enabled.

The WDT can be optionally controlled in software when the FWDTEN Configuration bit has been programmed to '`0`'. The WDT is enabled in software by setting the SWDTEN control bit (RCON<5>). The SWDTEN control bit is cleared on any device Reset. The software WDT option allows the user to enable the WDT for critical code segments and disable the WDT during non-critical segments for maximum power savings.

FIGURE 23-1: WDT BLOCK DIAGRAM

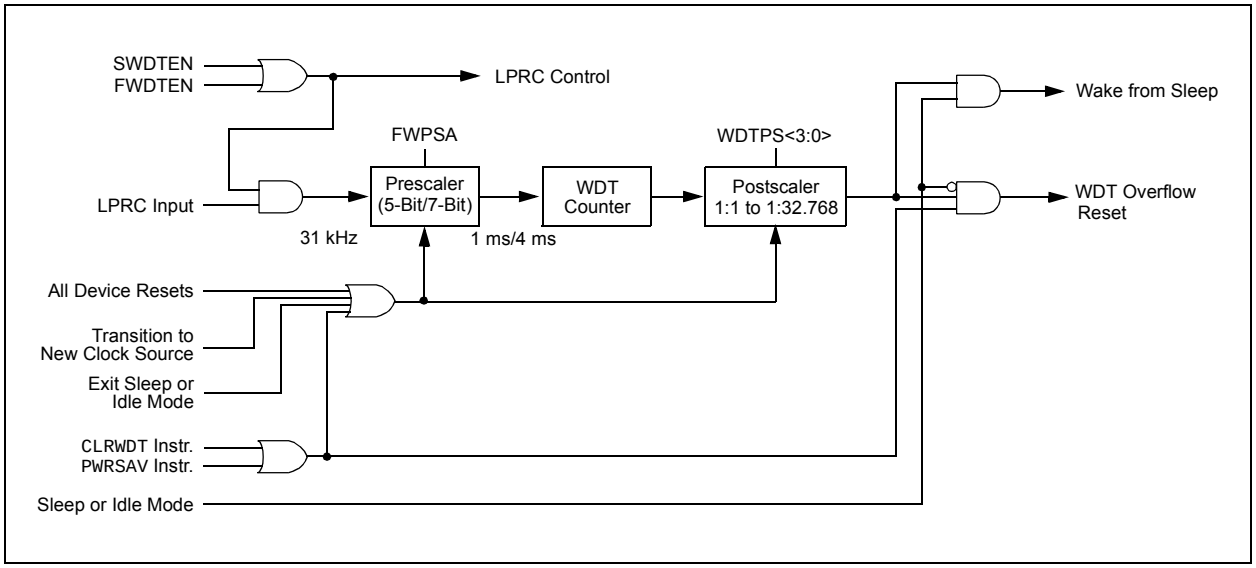

 © 2009 Microchip Technology Inc.

23.3 Deep Sleep Watchdog Timer (DSWDT)

In PIC24F04KA201 family devices, in addition to the WDT module, a DSWDT module is present which runs while the device is in Deep Sleep, if enabled. It is driven by either the SOSC or LPRC oscillator. The clock source is selected by the Configuration bit, DSWCKSEL (FDS<4>).

The DSWDT can be configured to generate a time-out at 2.1 ms to 25.7 days by selecting the respective postscaler. The postscaler can be selected by the Configuration bits, DSWDTPS<3:0> (FDS<3:0>). When the DSWDT is enabled, the clock source is also enabled.

DSWDT is one of the sources that can wake-up the device from Deep Sleep mode.

23.4 Program Verification and Code Protection

For all devices in the PIC24F04KA201 family, code protection for the general segment is controlled by the Configuration bit, GSS0. This bit inhibits external reads and writes to the program memory space; this has no direct effect in normal execution mode.

Write protection is controlled by the GWRP bit for the general segment in the Configuration Word. When this bit is programmed to '0', internal write and erase operations to program memory are blocked.

23.5 In-Circuit Serial Programming

PIC24F04KA201 family microcontrollers can be serially programmed while in the end application circuit. This is simply done with two lines for clock (PGCx) and data (PGDx) and three other lines for power, ground and the programming voltage. This allows customers to manufacture boards with unprogrammed devices and then program the microcontroller just before shipping the product. This also allows the most recent firmware or a custom firmware to be programmed.

NOTES:

 © 2009 Microchip Technology Inc.

24.0 DEVELOPMENT SUPPORT

The PIC® microcontrollers are supported with a full range of hardware and software development tools:

- Integrated Development Environment
  - MPLAB® IDE Software
- Assemblers/Compilers/Linkers
  - MPASM™ Assembler
  - MPLAB C18 and MPLAB C30 C Compilers
  - MPLINK™ Object Linker/ MPLIB™ Object Librarian
  - MPLAB ASM30 Assembler/Linker/Library
- Simulators
  - MPLAB SIM Software Simulator
- Emulators
  - MPLAB ICE 2000 In-Circuit Emulator
  - MPLAB REAL ICE™ In-Circuit Emulator
- In-Circuit Debugger
  - MPLAB ICD 2
- Device Programmers
  - PICSTART® Plus Development Programmer
  - MPLAB PM3 Device Programmer
  - PICkit™ 2 Development Programmer
- Low-Cost Demonstration and Development Boards and Evaluation Kits

24.1 MPLAB Integrated Development Environment Software

The MPLAB IDE software brings an ease of software development previously unseen in the 8/16-bit micro-controller market. The MPLAB IDE is a Windows® operating system-based application that contains:

- A single graphical interface to all debugging tools
  - Simulator
  - Programmer (sold separately)
  - Emulator (sold separately)
  - In-Circuit Debugger (sold separately)
- A full-featured editor with color-coded context
- A multiple project manager
- Customizable data windows with direct edit of contents
- High-level source code debugging
- Visual device initializer for easy register initialization
- Mouse over variable inspection
- Drag and drop variables from source to watch windows
- Extensive on-line help
- Integration of select third party tools, such as HI-TECH Software C Compilers and IAR C Compilers

The MPLAB IDE allows you to:

- Edit your source files (either assembly or C)
- One touch assemble (or compile) and download to PIC MCU emulator and simulator tools (automatically updates all project information)
- Debug using:
  - Source files (assembly or C)
  - Mixed assembly and C
  - Machine code

MPLAB IDE supports multiple debugging tools in a single development paradigm, from the cost-effective simulators, through low-cost in-circuit debuggers, to full-featured emulators. This eliminates the learning curve when upgrading to tools with increased flexibility and power.

24.2 MPASM Assembler

The MPASM Assembler is a full-featured, universal macro assembler for all PIC MCUs.

The MPASM Assembler generates relocatable object files for the MPLINK Object Linker, Intel® standard HEX files, MAP files to detail memory usage and symbol reference, absolute LST files that contain source lines and generated machine code and COFF files for debugging.

The MPASM Assembler features include:

- Integration into MPLAB IDE projects
- User-defined macros to streamline assembly code
- Conditional assembly for multi-purpose source files
- Directives that allow complete control over the assembly process

24.3 MPLAB C18 and MPLAB C30 C Compilers

The MPLAB C18 and MPLAB C30 Code Development Systems are complete ANSI C compilers for Microchip's PIC18 and PIC24 families of microcontrollers and the dsPIC30 and dsPIC33 family of digital signal controllers. These compilers provide powerful integration capabilities, superior code optimization and ease of use not found with other compilers.

For easy source level debugging, the compilers provide symbol information that is optimized to the MPLAB IDE debugger.

24.4 MPLINK Object Linker/ MPLIB Object Librarian

The MPLINK Object Linker combines relocatable objects created by the MPASM Assembler and the MPLAB C18 C Compiler. It can link relocatable objects from precompiled libraries, using directives from a linker script.

The MPLIB Object Librarian manages the creation and modification of library files of precompiled code. When a routine from a library is called from a source file, only the modules that contain that routine will be linked in with the application. This allows large libraries to be used efficiently in many different applications.

The object linker/library features include:

- Efficient linking of single libraries instead of many smaller files
- Enhanced code maintainability by grouping related modules together
- Flexible creation of libraries with easy module listing, replacement, deletion and extraction

24.5 MPLAB ASM30 Assembler, Linker and Librarian

MPLAB ASM30 Assembler produces relocatable machine code from symbolic assembly language for dsPIC30F devices. MPLAB C30 C Compiler uses the assembler to produce its object file. The assembler generates relocatable object files that can then be archived or linked with other relocatable object files and archives to create an executable file. Notable features of the assembler include:

- Support for the entire dsPIC30F instruction set
- Support for fixed-point and floating-point data
- Command line interface
- Rich directive set
- Flexible macro language
- MPLAB IDE compatibility

24.6 MPLAB SIM Software Simulator

The MPLAB SIM Software Simulator allows code development in a PC-hosted environment by simulating the PIC MCUs and dsPIC® DSCs on an instruction level. On any given instruction, the data areas can be examined or modified and stimuli can be applied from a comprehensive stimulus controller. Registers can be logged to files for further run-time analysis. The trace buffer and logic analyzer display extend the power of the simulator to record and track program execution, actions on I/O, most peripherals and internal registers.

The MPLAB SIM Software Simulator fully supports symbolic debugging using the MPLAB C18 and MPLAB C30 C Compilers, and the MPASM and MPLAB ASM30 Assemblers. The software simulator offers the flexibility to develop and debug code outside of the hardware laboratory environment, making it an excellent, economical software development tool.

 © 2009 Microchip Technology Inc.

24.7 MPLAB ICE 2000 High-Performance In-Circuit Emulator

The MPLAB ICE 2000 In-Circuit Emulator is intended to provide the product development engineer with a complete microcontroller design tool set for PIC microcontrollers. Software control of the MPLAB ICE 2000 In-Circuit Emulator is advanced by the MPLAB Integrated Development Environment, which allows editing, building, downloading and source debugging from a single environment.

The MPLAB ICE 2000 is a full-featured emulator system with enhanced trace, trigger and data monitoring features. Interchangeable processor modules allow the system to be easily reconfigured for emulation of different processors. The architecture of the MPLAB ICE 2000 In-Circuit Emulator allows expansion to support new PIC microcontrollers.

The MPLAB ICE 2000 In-Circuit Emulator system has been designed as a real-time emulation system with advanced features that are typically found on more expensive development tools. The PC platform and Microsoft® Windows® 32-bit operating system were chosen to best make these features available in a simple, unified application.

24.8 MPLAB REAL ICE In-Circuit Emulator System

MPLAB REAL ICE In-Circuit Emulator System is Microchip's next generation high-speed emulator for Microchip Flash DSC and MCU devices. It debugs and programs PIC® Flash MCUs and dsPIC® Flash DSCs with the easy-to-use, powerful graphical user interface of the MPLAB Integrated Development Environment (IDE), included with each kit.

The MPLAB REAL ICE probe is connected to the design engineer's PC using a high-speed USB 2.0 interface and is connected to the target with either a connector compatible with the popular MPLAB ICD 2 system (RJ11) or with the new high-speed, noise tolerant, Low-Voltage Differential Signal (LVDS) interconnection (CAT5).

MPLAB REAL ICE is field upgradeable through future firmware downloads in MPLAB IDE. In upcoming releases of MPLAB IDE, new devices will be supported, and new features will be added, such as software breakpoints and assembly code trace. MPLAB REAL ICE offers significant advantages over competitive emulators including low-cost, full-speed emulation, real-time variable watches, trace analysis, complex breakpoints, a ruggedized probe interface and long (up to three meters) interconnection cables.

24.9 MPLAB ICD 2 In-Circuit Debugger

Microchip's In-Circuit Debugger, MPLAB ICD 2, is a powerful, low-cost, run-time development tool, connecting to the host PC via an RS-232 or high-speed USB interface. This tool is based on the Flash PIC MCUs and can be used to develop for these and other PIC MCUs and dsPIC DSCs. The MPLAB ICD 2 utilizes the in-circuit debugging capability built into the Flash devices. This feature, along with Microchip's In-Circuit Serial Programming™ (ICSP™) protocol, offers cost-effective, in-circuit Flash debugging from the graphical user interface of the MPLAB Integrated Development Environment. This enables a designer to develop and debug source code by setting breakpoints, single stepping and watching variables, and CPU status and peripheral registers. Running at full speed enables testing hardware and applications in real time. MPLAB ICD 2 also serves as a development programmer for selected PIC devices.

24.10 MPLAB PM3 Device Programmer

The MPLAB PM3 Device Programmer is a universal, CE compliant device programmer with programmable voltage verification at V_{DDMIN} and V_{DDMAX} for maximum reliability. It features a large LCD display (128 x 64) for menus and error messages and a modular, detachable socket assembly to support various package types. The ICSP™ cable assembly is included as a standard item. In Stand-Alone mode, the MPLAB PM3 Device Programmer can read, verify and program PIC devices without a PC connection. It can also set code protection in this mode. The MPLAB PM3 connects to the host PC via an RS-232 or USB cable. The MPLAB PM3 has high-speed communications and optimized algorithms for quick programming of large memory devices and incorporates an SD/MMC card for file storage and secure data applications.

24.11 PICSTART Plus Development Programmer

The PICSTART Plus Development Programmer is an easy-to-use, low-cost, prototype programmer. It connects to the PC via a COM (RS-232) port. MPLAB Integrated Development Environment software makes using the programmer simple and efficient. The PICSTART Plus Development Programmer supports most PIC devices in DIP packages up to 40 pins. Larger pin count devices, such as the PIC16C92X and PIC17C76X, may be supported with an adapter socket. The PICSTART Plus Development Programmer is CE compliant.

24.12 PICkit 2 Development Programmer

The PICkit™ 2 Development Programmer is a low-cost programmer and selected Flash device debugger with an easy-to-use interface for programming many of Microchip's baseline, mid-range and PIC18F families of Flash memory microcontrollers. The PICkit 2 Starter Kit includes a prototyping development board, twelve sequential lessons, software and HI-TECH's PICC™ Lite C compiler, and is designed to help get up to speed quickly using PIC® microcontrollers. The kit provides everything needed to program, evaluate and develop applications using Microchip's powerful, mid-range Flash memory family of microcontrollers.

24.13 Demonstration, Development and Evaluation Boards

A wide variety of demonstration, development and evaluation boards for various PIC MCUs and dsPIC DSCs allows quick application development on fully functional systems. Most boards include prototyping areas for adding custom circuitry and provide application firmware and source code for examination and modification.

The boards support a variety of features, including LEDs, temperature sensors, switches, speakers, RS-232 interfaces, LCD displays, potentiometers and additional EEPROM memory.

The demonstration and development boards can be used in teaching environments, for prototyping custom circuits and for learning about various microcontroller applications.

In addition to the PICDEM™ and dsPICDEM™ demonstration/development board series of circuits, Microchip has a line of evaluation kits and demonstration software for analog filter design, KEELOQ® security ICs, CAN, IrDA®, PowerSmart battery management, SEEVAL® evaluation system, Sigma-Delta ADC, flow rate sensing, plus many more.

Check the Microchip web page (www.microchip.com) for the complete list of demonstration, development and evaluation kits.

 © 2009 Microchip Technology Inc.

25.0 INSTRUCTION SET SUMMARY

Note:	This chapter is a brief summary of the PIC24F instruction set architecture and is not intended to be a comprehensive reference source.

The PIC24F instruction set adds many enhancements to the previous PIC® MCU instruction sets, while maintaining an easy migration from previous PIC MCU instruction sets. Most instructions are a single program memory word. Only three instructions require two program memory locations.

Each single-word instruction is a 24-bit word divided into an 8-bit opcode, which specifies the instruction type and one or more operands, which further specify the operation of the instruction. The instruction set is highly orthogonal and is grouped into four basic categories:

- Word or byte-oriented operations
- Bit-oriented operations
- Literal operations
- Control operations

Table 25-1 lists the general symbols used in describing the instructions. The PIC24F instruction set summary in Table 25-2 lists all the instructions, along with the status flags affected by each instruction.

Most word or byte-oriented W register instructions (including barrel shift instructions) have three operands:

- The first source operand, which is typically a register ‘Wb’ without any address modifier
- The second source operand, which is typically a register ‘Ws’ with or without an address modifier
- The destination of the result, which is typically a register ‘Wd’ with or without an address modifier

However, word or byte-oriented file register instructions have two operands:

- The file register specified by the value, ‘f’
- The destination, which could either be the file register, ‘f’, or the W0 register, which is denoted as ‘WREG’

Most bit-oriented instructions (including simple rotate/shift instructions) have two operands:

- The W register (with or without an address modifier) or file register (specified by the value of ‘Ws’ or ‘f’)
- The bit in the W register or file register (specified by a literal value or indirectly by the contents of register ‘Wb’)

The literal instructions that involve data movement may use some of the following operands:

- A literal value to be loaded into a W register or file register (specified by the value of ‘k’)
- The W register or file register where the literal value is to be loaded (specified by ‘Wb’ or ‘f’)

However, literal instructions that involve arithmetic or logical operations use some of the following operands:

- The first source operand, which is a register ‘Wb’ without any address modifier
- The second source operand, which is a literal value
- The destination of the result (only if not the same as the first source operand), which is typically a register ‘Wd’ with or without an address modifier

The control instructions may use some of the following operands:

- A program memory address
- The mode of the table read and table write instructions

All instructions are a single word, except for certain double-word instructions, which were made double-word instructions so that all of the required information is available in these 48 bits. In the second word, the 8 MSbs are ‘0’s. If this second word is executed as an instruction (by itself), it will execute as a NOP.

Most single-word instructions are executed in a single instruction cycle, unless a conditional test is true or the Program Counter (PC) is changed as a result of the instruction. In these cases, the execution takes two instruction cycles, with the additional instruction cycle(s) executed as a NOP. Notable exceptions are the BRA (unconditional/computed branch), indirect CALL/GOTO, all table reads and writes, and RETURN/RETFIE instructions, which are single-word instructions but take two or three cycles.

Certain instructions that involve skipping over the subsequent instruction require either two or three cycles if the skip is performed, depending on whether the instruction being skipped is a single-word or two-word instruction. Moreover, double-word moves require two cycles. The double-word instructions execute in two instruction cycles.

TABLE 25-1: SYMBOLS USED IN OPCODE DESCRIPTIONS

Field	Description
#text	Means literal defined by "`text`"
(text)	Means "content of `text`"
[text]	Means "the location addressed by `text`"
{ }	Optional field or operation
<n:m>	Register bit field
.b	Byte mode selection
.d	Double-Word mode selection
.S	Shadow register select
.w	Word mode selection (default)
bit4	4-bit bit selection field (used in word addressed instructions) ∈ {0...15}
C, DC, N, OV, Z	MCU Status bits: Carry, Digit Carry, Negative, Overflow, Sticky Zero
Expr	Absolute address, label or expression (resolved by the linker)
f	File register address ∈ {0000h...1FFFh}
lit1	1-bit unsigned literal ∈ {0,1}
lit4	4-bit unsigned literal ∈ {0...15}
lit5	5-bit unsigned literal ∈ {0...31}
lit8	8-bit unsigned literal ∈ {0...255}
lit10	10-bit unsigned literal ∈ {0...255} for Byte mode, {0:1023} for Word mode
lit14	14-bit unsigned literal ∈ {0...16384}
lit16	16-bit unsigned literal ∈ {0...65535}
lit23	23-bit unsigned literal ∈ {0...8388608}; LSB must be '0'
None	Field does not require an entry, may be blank
PC	Program Counter
Slit10	10-bit signed literal ∈ {-512...511}
Slit16	16-bit signed literal ∈ {-32768...32767}
Slit6	6-bit signed literal ∈ {-16...16}
Wb	Base W register ∈ {W0..W15}
Wd	Destination W register ∈ { Wd, [Wd], [Wd++], [Wd--], [++Wd], [--Wd] }
Wdo	Destination W register ∈ { Wnd, [Wnd], [Wnd++], [Wnd--], [++Wnd], [--Wnd], [Wnd+Wb] }
Wm,Wn	Dividend, Divisor working register pair (direct addressing)
Wn	One of 16 working registers ∈ {W0..W15}
Wnd	One of 16 destination working registers ∈ {W0..W15}
Wns	One of 16 source working registers ∈ {W0..W15}
WREG	W0 (working register used in file register instructions)
Ws	Source W register ∈ { Ws, [Ws], [Ws++], [Ws--], [++Ws], [--Ws] }
Wso	Source W register ∈ { Wns, [Wns], [Wns++], [Wns--], [++Wns], [--Wns], [Wns+Wb] }

 © 2009 Microchip Technology Inc.

TABLE 25-2: INSTRUCTION SET OVERVIEW

Assembly Mnemonic	Assembly Syntax	Description	# of Words	# of Cycles	Status Flags Affected
ADD	ADD f	f = f + WREG	1	1	C, DC, N, OV, Z
	ADD f,WREG	WREG = f + WREG	1	1	C, DC, N, OV, Z
	ADD #lit10,Wn	Wd = lit10 + Wd	1	1	C, DC, N, OV, Z
	ADD Wb,Ws,Wd	Wd = Wb + Ws	1	1	C, DC, N, OV, Z
	ADD Wb,#lit5,Wd	Wd = Wb + lit5	1	1	C, DC, N, OV, Z
ADDC	ADDC f	f = f + WREG + (C)	1	1	C, DC, N, OV, Z
	ADDC f,WREG	WREG = f + WREG + (C)	1	1	C, DC, N, OV, Z
	ADDC #lit10,Wn	Wd = lit10 + Wd + (C)	1	1	C, DC, N, OV, Z
	ADDC Wb,Ws,Wd	Wd = Wb + Ws + (C)	1	1	C, DC, N, OV, Z
	ADDC Wb,#lit5,Wd	Wd = Wb + lit5 + (C)	1	1	C, DC, N, OV, Z
AND	AND f	f = f .AND. WREG	1	1	N, Z
	AND f,WREG	WREG = f .AND. WREG	1	1	N, Z
	AND #lit10,Wn	Wd = lit10 .AND. Wd	1	1	N, Z
	AND Wb,Ws,Wd	Wd = Wb .AND. Ws	1	1	N, Z
	AND Wb,#lit5,Wd	Wd = Wb .AND. lit5	1	1	N, Z
ASR	ASR f	f = Arithmetic Right Shift f	1	1	C, N, OV, Z
	ASR f,WREG	WREG = Arithmetic Right Shift f	1	1	C, N, OV, Z
	ASR Ws,Wd	Wd = Arithmetic Right Shift Ws	1	1	C, N, OV, Z
	ASR Wb,Wns,Wnd	Wnd = Arithmetic Right Shift Wb by Wns	1	1	N, Z
	ASR Wb,#lit5,Wnd	Wnd = Arithmetic Right Shift Wb by lit5	1	1	N, Z
BCLR	BCLR f,#bit4	Bit Clear f	1	1	None
	BCLR Ws,#bit4	Bit Clear Ws	1	1	None
BRA	BRA C,Expr	Branch if Carry	1	1 (2)	None
	BRA GE,Expr	Branch if Greater than or Equal	1	1 (2)	None
	BRA GEU,Expr	Branch if Unsigned Greater than or Equal	1	1 (2)	None
	BRA GT,Expr	Branch if Greater than	1	1 (2)	None
	BRA GTU,Expr	Branch if Unsigned Greater than	1	1 (2)	None
	BRA LE,Expr	Branch if Less than or Equal	1	1 (2)	None
	BRA LEU,Expr	Branch if Unsigned Less than or Equal	1	1 (2)	None
	BRA LT,Expr	Branch if Less than	1	1 (2)	None
	BRA LTU,Expr	Branch if Unsigned Less than	1	1 (2)	None
	BRA N,Expr	Branch if Negative	1	1 (2)	None
	BRA NC,Expr	Branch if Not Carry	1	1 (2)	None
	BRA NN,Expr	Branch if Not Negative	1	1 (2)	None
	BRA NOV,Expr	Branch if Not Overflow	1	1 (2)	None
	BRA NZ,Expr	Branch if Not Zero	1	1 (2)	None
	BRA OV,Expr	Branch if Overflow	1	1 (2)	None
	BRA Expr	Branch Unconditionally	1	2	None
	BRA Z,Expr	Branch if Zero	1	1 (2)	None
	BRA Wn	Computed Branch	1	2	None
BSET	BSET f,#bit4	Bit Set f	1	1	None
	BSET Ws,#bit4	Bit Set Ws	1	1	None
BSW	BSW.C Ws,Wb	Write C bit to Ws<Wb>	1	1	None
	BSW.Z Ws,Wb	Write Z bit to Ws<Wb>	1	1	None
BTG	BTG f,#bit4	Bit Toggle f	1	1	None
	BTG Ws,#bit4	Bit Toggle Ws	1	1	None
BTSC	BTSC f,#bit4	Bit Test f, Skip if Clear	1	1 (2 or 3)	None
	BTSC Ws,#bit4	Bit Test Ws, Skip if Clear	1	1 (2 or 3)	None

TABLE 25-2: INSTRUCTION SET OVERVIEW (CONTINUED)

Assembly Mnemonic	Assembly Syntax	Description	# of Words	# of Cycles	Status Flags Affected
BTSS	BTSS f,#bit4	Bit Test f, Skip if Set	1	1 (2 or 3)	None
	BTSS Ws,#bit4	Bit Test Ws, Skip if Set	1	1 (2 or 3)	None
BTST	BTST f,#bit4	Bit Test f	1	1	Z
	BTST.C Ws,#bit4	Bit Test Ws to C	1	1	C
	BTST.Z Ws,#bit4	Bit Test Ws to Z	1	1	Z
	BTST.C Ws,Wb	Bit Test Ws<Wb> to C	1	1	C
	BTST.Z Ws,Wb	Bit Test Ws<Wb> to Z	1	1	Z
BTSTS	BTSTS f,#bit4	Bit Test then Set f	1	1	Z
	BTSTS.C Ws,#bit4	Bit Test Ws to C, then Set	1	1	C
	BTSTS.Z Ws,#bit4	Bit Test Ws to Z, then Set	1	1	Z
CALL	CALL lit23	Call Subroutine	2	2	None
	CALL Wn	Call Indirect Subroutine	1	2	None
CLR	CLR f	f = 0x0000	1	1	None
	CLR WREG	WREG = 0x0000	1	1	None
	CLR Ws	Ws = 0x0000	1	1	None
CLRWDT	CLRWDT	Clear Watchdog Timer	1	1	WDTO, Sleep
COM	COM f	$f = \overline{f}$	1	1	N, Z
	COM f,WREG	$WREG = \overline{f}$	1	1	N, Z
	COM Ws,Wd	$Wd = \overline{Ws}$	1	1	N, Z
CP	CP f	Compare f with WREG	1	1	C, DC, N, OV, Z
	CP Wb,#lit5	Compare Wb with lit5	1	1	C, DC, N, OV, Z
	CP Wb,Ws	Compare Wb with Ws (Wb – Ws)	1	1	C, DC, N, OV, Z
CP0	CP0 f	Compare f with 0x0000	1	1	C, DC, N, OV, Z
	CP0 Ws	Compare Ws with 0x0000	1	1	C, DC, N, OV, Z
CPB	CPB f	Compare f with WREG, with Borrow	1	1	C, DC, N, OV, Z
	CPB Wb,#lit5	Compare Wb with lit5, with Borrow	1	1	C, DC, N, OV, Z
	CPB Wb,Ws	Compare Wb with Ws, with Borrow ($Wb – Ws – \overline{C}$)	1	1	C, DC, N, OV, Z
CPSEQ	CPSEQ Wb,Wn	Compare Wb with Wn, Skip if =	1	1 (2 or 3)	None
CPSGT	CPSGT Wb,Wn	Compare Wb with Wn, Skip if >	1	1 (2 or 3)	None
CPSLT	CPSLT Wb,Wn	Compare Wb with Wn, Skip if <	1	1 (2 or 3)	None
CPSNE	CPSNE Wb,Wn	Compare Wb with Wn, Skip if ≠	1	1 (2 or 3)	None
DAW	DAW Wn	Wn = Decimal Adjust Wn	1	1	C
DEC	DEC f	f = f –1	1	1	C, DC, N, OV, Z
	DEC f,WREG	WREG = f –1	1	1	C, DC, N, OV, Z
	DEC Ws,Wd	Wd = Ws – 1	1	1	C, DC, N, OV, Z
DEC2	DEC2 f	f = f – 2	1	1	C, DC, N, OV, Z
	DEC2 f,WREG	WREG = f – 2	1	1	C, DC, N, OV, Z
	DEC2 Ws,Wd	Wd = Ws – 2	1	1	C, DC, N, OV, Z
DISI	DISI #lit14	Disable Interrupts for k Instruction Cycles	1	1	None
DIV	DIV.SW Wm,Wn	Signed 16/16-bit Integer Divide	1	18	N, Z, C, OV
	DIV.SD Wm,Wn	Signed 32/16-bit Integer Divide	1	18	N, Z, C, OV
	DIV.UW Wm,Wn	Unsigned 16/16-bit Integer Divide	1	18	N, Z, C, OV
	DIV.UD Wm,Wn	Unsigned 32/16-bit Integer Divide	1	18	N, Z, C, OV
EXCH	EXCH Wns,Wnd	Swap Wns with Wnd	1	1	None
FF1L	FF1L Ws,Wnd	Find First One from Left (MSb) Side	1	1	C
FF1R	FF1R Ws,Wnd	Find First One from Right (LSb) Side	1	1	C

 © 2009 Microchip Technology Inc.

TABLE 25-2: INSTRUCTION SET OVERVIEW (CONTINUED)

Assembly Mnemonic	Assembly Syntax		Description	# of Words	# of Cycles	Status Flags Affected
GOTO	GOTO	Expr	Go to Address	2	2	None
	GOTO	Wn	Go to Indirect	1	2	None
INC	INC	f	f = f + 1	1	1	C, DC, N, OV, Z
	INC	f,WREG	WREG = f + 1	1	1	C, DC, N, OV, Z
	INC	Ws,Wd	Wd = Ws + 1	1	1	C, DC, N, OV, Z
INC2	INC2	f	f = f + 2	1	1	C, DC, N, OV, Z
	INC2	f,WREG	WREG = f + 2	1	1	C, DC, N, OV, Z
	INC2	Ws,Wd	Wd = Ws + 2	1	1	C, DC, N, OV, Z
IOR	IOR	f	f = f .IOR. WREG	1	1	N, Z
	IOR	f,WREG	WREG = f .IOR. WREG	1	1	N, Z
	IOR	#lit10,Wn	Wd = lit10 .IOR. Wd	1	1	N, Z
	IOR	Wb,Ws,Wd	Wd = Wb .IOR. Ws	1	1	N, Z
	IOR	Wb,#lit5,Wd	Wd = Wb .IOR. lit5	1	1	N, Z
LNK	LNK	#lit14	Link Frame Pointer	1	1	None
LSR	LSR	f	f = Logical Right Shift f	1	1	C, N, OV, Z
	LSR	f,WREG	WREG = Logical Right Shift f	1	1	C, N, OV, Z
	LSR	Ws,Wd	Wd = Logical Right Shift Ws	1	1	C, N, OV, Z
	LSR	Wb,Wns,Wnd	Wnd = Logical Right Shift Wb by Wns	1	1	N, Z
	LSR	Wb,#lit5,Wnd	Wnd = Logical Right Shift Wb by lit5	1	1	N, Z
MOV	MOV	f,Wn	Move f to Wn	1	1	None
	MOV	[Wns+Slit10],Wnd	Move [Wns+Slit10] to Wnd	1	1	None
	MOV	f	Move f to f	1	1	N, Z
	MOV	f,WREG	Move f to WREG	1	1	N, Z
	MOV	#lit16,Wn	Move 16-bit Literal to Wn	1	1	None
	MOV.b	#lit8,Wn	Move 8-bit Literal to Wn	1	1	None
	MOV	Wn,f	Move Wn to f	1	1	None
	MOV	Wns,[Wns+Slit10]	Move Wns to [Wns+Slit10]	1	1	None
	MOV	Wso,Wdo	Move Ws to Wd	1	1	None
	MOV	WREG,f	Move WREG to f	1	1	N, Z
	MOV.D	Wns,Wd	Move Double from W(ns):W(ns+1) to Wd	1	2	None
	MOV.D	Ws,Wnd	Move Double from Ws to W(nd+1):W(nd)	1	2	None
MUL	MUL.SS	Wb,Ws,Wnd	{Wnd+1, Wnd} = Signed(Wb) * Signed(Ws)	1	1	None
	MUL.SU	Wb,Ws,Wnd	{Wnd+1, Wnd} = Signed(Wb) * Unsigned(Ws)	1	1	None
	MUL.US	Wb,Ws,Wnd	{Wnd+1, Wnd} = Unsigned(Wb) * Signed(Ws)	1	1	None
	MUL.UU	Wb,Ws,Wnd	{Wnd+1, Wnd} = Unsigned(Wb) * Unsigned(Ws)	1	1	None
	MUL.SU	Wb,#lit5,Wnd	{Wnd+1, Wnd} = Signed(Wb) * Unsigned(lit5)	1	1	None
	MUL.UU	Wb,#lit5,Wnd	{Wnd+1, Wnd} = Unsigned(Wb) * Unsigned(lit5)	1	1	None
	MUL	f	W3:W2 = f * WREG	1	1	None
NEG	NEG	f	f = $\overline{f}$ + 1	1	1	C, DC, N, OV, Z
	NEG	f,WREG	WREG = $\overline{f}$ + 1	1	1	C, DC, N, OV, Z
	NEG	Ws,Wd	Wd = $\overline{Ws}$ + 1	1	1	C, DC, N, OV, Z
NOP	NOP		No Operation	1	1	None
	NOPR		No Operation	1	1	None
POP	POP	f	Pop f from Top-of-Stack (TOS)	1	1	None
	POP	Wdo	Pop from Top-of-Stack (TOS) to Wdo	1	1	None
	POP.D	Wnd	Pop from Top-of-Stack (TOS) to W(nd):W(nd+1)	1	2	None
	POP.S		Pop Shadow Registers	1	1	All
PUSH	PUSH	f	Push f to Top-of-Stack (TOS)	1	1	None
	PUSH	Wso	Push Wso to Top-of-Stack (TOS)	1	1	None
	PUSH.D	Wns	Push W(ns):W(ns+1) to Top-of-Stack (TOS)	1	2	None
	PUSH.S		Push Shadow Registers	1	1	None

TABLE 25-2: INSTRUCTION SET OVERVIEW (CONTINUED)

Assembly Mnemonic	Assembly Syntax		Description	# of Words	# of Cycles	Status Flags Affected
PWRSAV	PWRSAV	#lit1	Go into Sleep or Idle mode	1	1	WDTO, Sleep
RCALL	RCALL	Expr	Relative Call	1	2	None
	RCALL	Wn	Computed Call	1	2	None
REPEAT	REPEAT	#lit14	Repeat Next Instruction lit14 + 1 times	1	1	None
	REPEAT	Wn	Repeat Next Instruction (Wn) + 1 times	1	1	None
RESET	RESET		Software Device Reset	1	1	None
RETFIE	RETFIE		Return from Interrupt	1	3 (2)	None
RETLW	RETLW	#lit10,Wn	Return with Literal in Wn	1	3 (2)	None
RETURN	RETURN		Return from Subroutine	1	3 (2)	None
RLC	RLC	f	f = Rotate Left through Carry f	1	1	C, N, Z
	RLC	f,WREG	WREG = Rotate Left through Carry f	1	1	C, N, Z
	RLC	Ws,Wd	Wd = Rotate Left through Carry Ws	1	1	C, N, Z
RLNC	RLNC	f	f = Rotate Left (No Carry) f	1	1	N, Z
	RLNC	f,WREG	WREG = Rotate Left (No Carry) f	1	1	N, Z
	RLNC	Ws,Wd	Wd = Rotate Left (No Carry) Ws	1	1	N, Z
RRC	RRC	f	f = Rotate Right through Carry f	1	1	C, N, Z
	RRC	f,WREG	WREG = Rotate Right through Carry f	1	1	C, N, Z
	RRC	Ws,Wd	Wd = Rotate Right through Carry Ws	1	1	C, N, Z
RRNC	RRNC	f	f = Rotate Right (No Carry) f	1	1	N, Z
	RRNC	f,WREG	WREG = Rotate Right (No Carry) f	1	1	N, Z
	RRNC	Ws,Wd	Wd = Rotate Right (No Carry) Ws	1	1	N, Z
SE	SE	Ws,Wnd	Wnd = Sign-Extended Ws	1	1	C, N, Z
SETM	SETM	f	f = FFFFh	1	1	None
	SETM	WREG	WREG = FFFFh	1	1	None
	SETM	Ws	Ws = FFFFh	1	1	None
SL	SL	f	f = Left Shift f	1	1	C, N, OV, Z
	SL	f,WREG	WREG = Left Shift f	1	1	C, N, OV, Z
	SL	Ws,Wd	Wd = Left Shift Ws	1	1	C, N, OV, Z
	SL	Wb,Wns,Wnd	Wnd = Left Shift Wb by Wns	1	1	N, Z
	SL	Wb,#lit5,Wnd	Wnd = Left Shift Wb by lit5	1	1	N, Z
SUB	SUB	f	f = f – WREG	1	1	C, DC, N, OV, Z
	SUB	f,WREG	WREG = f – WREG	1	1	C, DC, N, OV, Z
	SUB	#lit10,Wn	Wn = Wn – lit10	1	1	C, DC, N, OV, Z
	SUB	Wb,Ws,Wd	Wd = Wb – Ws	1	1	C, DC, N, OV, Z
	SUB	Wb,#lit5,Wd	Wd = Wb – lit5	1	1	C, DC, N, OV, Z
SUBB	SUBB	f	f = f – WREG – ($\overline{C}$)	1	1	C, DC, N, OV, Z
	SUBB	f,WREG	WREG = f – WREG – ($\overline{C}$)	1	1	C, DC, N, OV, Z
	SUBB	#lit10,Wn	Wn = Wn – lit10 – ($\overline{C}$)	1	1	C, DC, N, OV, Z
	SUBB	Wb,Ws,Wd	Wd = Wb – Ws – ($\overline{C}$)	1	1	C, DC, N, OV, Z
	SUBB	Wb,#lit5,Wd	Wd = Wb – lit5 – ($\overline{C}$)	1	1	C, DC, N, OV, Z
SUBR	SUBR	f	f = WREG – f	1	1	C, DC, N, OV, Z
	SUBR	f,WREG	WREG = WREG – f	1	1	C, DC, N, OV, Z
	SUBR	Wb,Ws,Wd	Wd = Ws – Wb	1	1	C, DC, N, OV, Z
	SUBR	Wb,#lit5,Wd	Wd = lit5 – Wb	1	1	C, DC, N, OV, Z
SUBBR	SUBBR	f	f = WREG – f – ($\overline{C}$)	1	1	C, DC, N, OV, Z
	SUBBR	f,WREG	WREG = WREG – f – ($\overline{C}$)	1	1	C, DC, N, OV, Z
	SUBBR	Wb,Ws,Wd	Wd = Ws – Wb – ($\overline{C}$)	1	1	C, DC, N, OV, Z
	SUBBR	Wb,#lit5,Wd	Wd = lit5 – Wb – ($\overline{C}$)	1	1	C, DC, N, OV, Z
SWAP	SWAP.b	Wn	Wn = Nibble Swap Wn	1	1	None
	SWAP	Wn	Wn = Byte Swap Wn	1	1	None
TBLRDH	TBLRDH	Ws,Wd	Read Prog<23:16> to Wd<7:0>	1	2	None

 © 2009 Microchip Technology Inc.

TABLE 25-2: INSTRUCTION SET OVERVIEW (CONTINUED)

Assembly Mnemonic	Assembly Syntax	Description	# of Words	# of Cycles	Status Flags Affected
TBLRDL	TBLRDL Ws,Wd	Read Prog<15:0> to Wd	1	2	None
TBLWTH	TBLWTH Ws,Wd	Write Ws<7:0> to Prog<23:16>	1	2	None
TBLWTL	TBLWTL Ws,Wd	Write Ws to Prog<15:0>	1	2	None
ULNK	ULNK	Unlink Frame Pointer	1	1	None
XOR	XOR f	f = f .XOR. WREG	1	1	N, Z
	XOR f,WREG	WREG = f .XOR. WREG	1	1	N, Z
	XOR #lit10,Wn	Wd = lit10 .XOR. Wd	1	1	N, Z
	XOR Wb,Ws,Wd	Wd = Wb .XOR. Ws	1	1	N, Z
	XOR Wb,#lit5,Wd	Wd = Wb .XOR. lit5	1	1	N, Z
ZE	ZE Ws,Wnd	Wnd = Zero-Extend Ws	1	1	C, Z, N

NOTES:

 © 2009 Microchip Technology Inc.

26.0 ELECTRICAL CHARACTERISTICS

This section provides an overview of the PIC24F04KA201 family electrical characteristics. Additional information will be provided in future revisions of this document as it becomes available.

Absolute maximum ratings for the PIC24F04KA201 family are listed below. Exposure to these maximum rating conditions for extended periods may affect device reliability. Functional operation of the device at these, or any other conditions above the parameters indicated in the operation listings of this specification, is not implied.

Absolute Maximum Ratings(†)

Ambient temperature under bias ..... -40°C to +125°C
Storage temperature ..... -65°C to +150°C
Voltage on V_{DD} with respect to V_{SS} ..... -0.3V to +5.0V
Voltage on any combined analog and digital pin, with respect to V_{SS} ..... -0.3V to (V_{DD} + 0.3V)
Voltage on any digital only pin with respect to V_{SS} ..... -0.3V to (V_{DD} + 0.3V)
Voltage on $\overline{MCLR}$/V_{PP} pin with respect to V_{SS} ..... -0.3V to +9.0V
Maximum current out of V_{SS} pin ..... 300 mA
Maximum current into V_{DD} pin (1) ..... 250 mA
Maximum output current sunk by any I/O pin ..... 25 mA
Maximum output current sourced by any I/O pin ..... 25 mA
Maximum current sunk by all ports ..... 200 mA
Maximum current sourced by all ports (1) ..... 200 mA

Note 1: Maximum allowable current is a function of device maximum power dissipation (see Table 26-1).

†NOTICE: Stresses above those listed under “Absolute Maximum Ratings” may cause permanent damage to the device. This is a stress rating only and functional operation of the device at those or any other conditions above those indicated in the operation listings of this specification is not implied. Exposure to maximum rating conditions for extended periods may affect device reliability.

26.1 DC Characteristics

FIGURE 26-1: PIC24F04KA201 FAMILY VOLTAGE-FREQUENCY GRAPH (INDUSTRIAL)

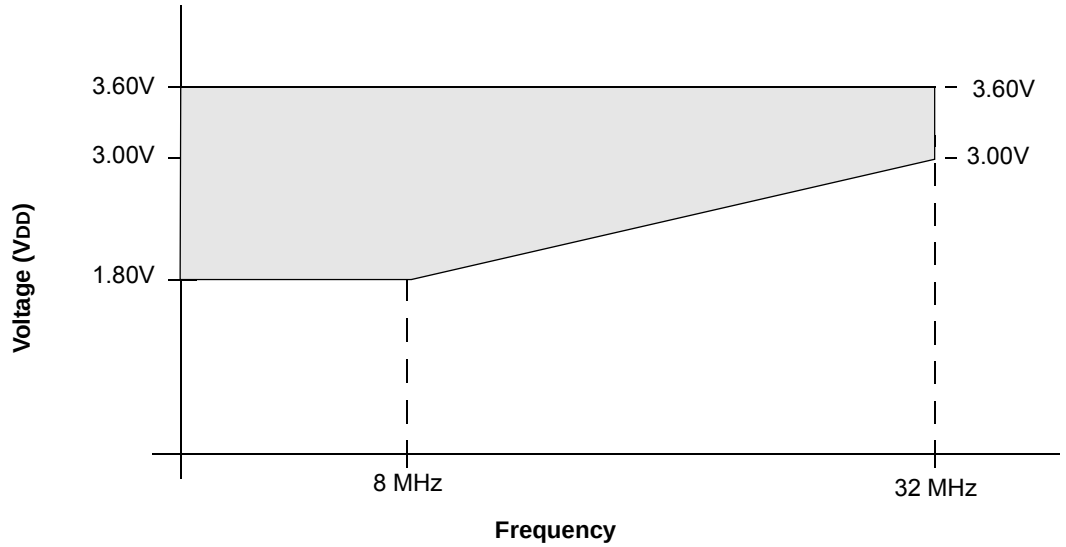

Note: For frequencies between 8 MHz and 32 MHz, F_{MAX} = 20 MHz *(V_{DD} – 1.8) + 8 MHz.

TABLE 26-1: THERMAL OPERATING CONDITIONS

Rating	Symbol	Min	Typ	Max	Unit
Operating Junction Temperature Range	T_J	-40	—	+125	°C
Operating Ambient Temperature Range	T_A	-40	—	+85	°C
Power Dissipation: Internal Chip Power Dissipation: $P_{INT} = V_{DD} \times (I_{DD} - \Sigma I_{OH})$ I/O Pin Power Dissipation: $P_{I/O} = \Sigma (\{V_{DD} - V_{OH}\} \times I_{OH}) + \Sigma (V_{OL} \times I_{OL})$	P_D	$P_{INT} + P_{I/O}$			W
Maximum Allowed Power Dissipation	P_{DMAX}	$(T_J - T_A)/\theta_{JA}$			W

TABLE 26-2: THERMAL PACKAGING CHARACTERISTICS

Characteristic	Symbol	Typ	Max	Unit	Notes
Package Thermal Resistance, 14-Pin PDIP	θ_{JA}	62.4	—	°C/W	**1**
Package Thermal Resistance, 20-Pin PDIP	θ_{JA}	60	—	°C/W	**1**
Package Thermal Resistance, 14-Pin SSOP	θ_{JA}	108	—	°C/W	**1**
Package Thermal Resistance, 20-Pin SSOP	θ_{JA}	71	—	°C/W	**1**
Package Thermal Resistance, 14-Pin SOIC	θ_{JA}	75	—	°C/W	**1**
Package Thermal Resistance, 20-Pin SOIC	θ_{JA}	80.2	—	°C/W	**1**
Package Thermal Resistance, 14-Pin QFN	θ_{JA}	43	—	°C/W	**1**
Package Thermal Resistance, 20-Pin QFN	θ_{JA}	32	—	°C/W	**1**

Note 1: Junction to ambient thermal resistance, Theta-JA (θ_{JA}) numbers are achieved by package simulations.

 © 2009 Microchip Technology Inc.

TABLE 26-3: DC CHARACTERISTICS: TEMPERATURE AND VOLTAGE SPECIFICATIONS

DC CHARACTERISTICS			Standard Operating Conditions: 1.8V to 3.6V (unless otherwise stated) Operating temperature -40°C ≤ TA ≤ +85°C for Industrial				
Param No.	**Symbol**	**Characteristic**	**Min**	**Typ(1)**	**Max**	**Units**	**Conditions**
DC10	VDD	**Supply Voltage**	1.8	—	3.6	V	
DC12	VDR	**RAM Data Retention Voltage(2)**	1.5	—	—	V	
DC16	VPOR	**VDD Start Voltage** to Ensure Internal Power-on Reset Signal	VSS	—	0.7	V	
DC17	SVDD	**VDD Rise Rate** to Ensure Internal Power-on Reset Signal	0.05	—	—	V/ms	0-3.3V in 0.1s 0-2.5V in 60 ms

Note 1: Data in "Typ" column is at 3.3V, 25°C unless otherwise stated. Parameters are for design guidance only and are not tested.

2: This is the limit to which VDD can be lowered without losing RAM data.

TABLE 26-4: HIGH/LOW–VOLTAGE DETECT CHARACTERISTICS

Standard Operating Conditions (unless otherwise stated) Operating temperature -40°C ≤ TA ≤ +85°C for industrial								
Param No.	**Symbol**	**Characteristic**		**Min**	**Typ**	**Max**	**Units**	**Conditions**
DC18	VHLVD	HLVD Voltage on VDD Transition	HLVDL<3:0> = 0000	—	1.85	1.94	V	
			HLVDL<3:0> = 0001	1.81	1.90	2.00	V	
			HLVDL<3:0> = 0010	1.85	1.95	2.05	V	
			HLVDL<3:0> = 0011	1.90	2.00	2.10	V	
			HLVDL<3:0> = 0100	1.95	2.05	2.15	V	
			HLVDL<3:0> = 0101	2.06	2.17	2.28	V	
			HLVDL<3:0> = 0110	2.12	2.23	2.34	V	
			HLVDL<3:0> = 0111	2.24	2.36	2.48	V	
			HLVDL<3:0> = 1000	2.31	2.43	2.55	V	
			HLVDL<3:0> = 1001	2.47	2.60	2.73	V	
			HLVDL<3:0> = 1010	2.64	2.78	2.92	V	
			HLVDL<3:0> = 1011	2.74	2.88	3.02	V	
			HLVDL<3:0> = 1100	2.85	3.00	3.15	V	
			HLVDL<3:0> = 1101	2.96	3.12	3.28	V	
			HLVDL<3:0> = 1110	3.22	3.39	3.56	V	

TABLE 26-5: BOR TRIP POINTS

Standard Operating Conditions (unless otherwise stated) Operating temperature -40°C ≤ TA ≤ +85°C for industrial								
Param No.	**Sym**	**Characteristic**		**Min**	**Typ**	**Max**	**Units**	**Conditions**
DC19		BOR Voltage on VDD Transition	BOR = 00	1.55	2	2.00	V	Valid for LPBOR and DSBOR
			BOR = 01	2.92	3	3.25	V	
			BOR = 10	2.63	2.7	2.92	V	
			BOR = 11	1.75	1.78	2.01	V	

TABLE 26-6: DC CHARACTERISTICS: OPERATING CURRENT (IDD)

DC CHARACTERISTICS			Standard Operating Conditions: 1.8V to 3.6V (unless otherwise stated) Operating temperature -40°C ≤ TA ≤ +85°C for Industrial			
Parameter No.	**Typical(1)**	**Max**	**Units**	**Conditions**		
IDD Current						
DC20	195	330	μA	-40°C	1.8V	0.5 MIPS, FOSC = 1 MHz
DS20a		330		+25°C		
DC20b		330		+60°C		
DC20c		330		+85°C		
DC20d	365	590	μA	-40°C	3.3V	
DC20e		590		+25°C		
DC20f		645		+60°C		
DC20g		720		+85°C		
DC22	363	600	μA	-40°C	1.8V	1 MIPS, FOSC = 2 MHz
DC22a		600		+25°C		
DC22b		600		+60°C		
DC22c		600		+85°C		
DC22d	695	1100	μA	-40°C	3.3V	
DC22e		1100		+25°C		
DC22f		1100		+60°C		
DC22g		1100		+85°C		
DC23	11	18	mA	-40°C	3.3V	16 MIPS, FOSC = 32 MHz
DC23a		18		+25°C		
DC23b		18		+60°C		
DC23c		18		+85°C		
DC27	2.25	3.40	mA	-40°C	2.5V	FRC (4 MIPS), FOSC = 8 MHz
DC27a		3.40		+25°C		
DC27b		3.40		+60°C		
DC27c		3.40		+85°C		
DC27d	3.05	4.60	mA	-40°C	3.3V	
DC27e		4.60		+25°C		
DC27f		4.60		+60°C		
DC27g		4.60		+85°C		

Note 1: Data in “Typical” column is at 3.3V, 25°C unless otherwise stated. Parameters are for design guidance only and are not tested.

2: Operating Parameters:
- EC mode with clock input driven with a square wave rail-to-rail
- I/O configured as outputs driven low
- $\overline{MCLR}$ – VDD
- WDT FSCM disabled
- SRAM, program and data memory active
- All PMD bits set except for modules being measured

 © 2009 Microchip Technology Inc.

TABLE 26-6: DC CHARACTERISTICS: OPERATING CURRENT (I_{DD}) (CONTINUED)

DC CHARACTERISTICS			Standard Operating Conditions: 1.8V to 3.6V (unless otherwise stated) Operating temperature -40°C ≤ TA ≤ +85°C for Industrial			
Parameter No.	**Typical(1)**	**Max**	**Units**	**Conditions**		
IDD Current						
DC31	8	28	μA	-40°C	1.8V	LPRC (31 kHz)
DC31a		28		+25°C		
DC31b		28		+60°C		
DC31c		28		+85°C		
DC31d	15	55	μA	-40°C	3.3V	
DC31e		55		+25°C		
DC31f		55		+60°C		
DC31g		55		+85°C		

Note 1: Data in "Typical" column is at 3.3V, 25°C unless otherwise stated. Parameters are for design guidance only and are not tested.

2: Operating Parameters:
- EC mode with clock input driven with a square wave rail-to-rail
- I/O configured as outputs driven low
- $\overline{MCLR}$ – VDD
- WDT FSCM disabled
- SRAM, program and data memory active
- All PMD bits set except for modules being measured

TABLE 26-7: DC CHARACTERISTICS: IDLE CURRENT (I_{IDLE})

DC CHARACTERISTICS			Standard Operating Conditions: 1.8V to 3.6V (unless otherwise stated) Operating temperature -40°C ≤ TA ≤ +85°C for Industrial			
Param No.	**Typical(1)**	**Max**	**Units**	**Conditions**		
Idle Current (IIDLE): Core Off, Clock on Base Current, PMD Bits are Set(2)						
DC40	48	100	μA	-40°C	1.8V	0.5 MIPS, FOSC = 1 MHz
DC40a		100		+25°C		
DC40b		100		+60°C		
DC40c		100		+85°C		
DC40d	106	215	μA	-40°C	3.3V	
DC40e		215		+25°C		
DC40f		215		+60°C		
DC40g		215		+85°C		

Note 1: Data in "Typical" column is at 3.3V, 25°C unless otherwise stated. Parameters are for design guidance only and are not tested.

2: Operating Parameters:
- Core off
- EC mode with clock input driven with a square wave rail-to-rail
- I/O configured as outputs driven low
- $\overline{MCLR}$ – VDD
- WDT FSCM disabled
- SRAM, program and data memory active
- All PMD bits set except for modules being measured

TABLE 26-7: DC CHARACTERISTICS: IDLE CURRENT (I_{IDLE}) (CONTINUED)

DC CHARACTERISTICS			Standard Operating Conditions: 1.8V to 3.6V (unless otherwise stated) Operating temperature -40°C ≤ TA ≤ +85°C for Industrial			
Param No.	**Typical(1)**	**Max**	**Units**	**Conditions**		
Idle Current (I_{IDLE}): Core Off, Clock on Base Current, PMD Bits are Set(2)						
DC42	94	200	μA	-40°C	1.8V	1 MIPS, FOSC = 2 MHz
DC42a		200		+25°C		
DC42b		200		+60°C		
DC42c		200		+85°C		
DC42d	160	395	μA	-40°C	3.3V	
DC42e		395		+25°C		
DC42f		395		+60°C		
DC42g		395		+85°C		
DC43	3.1	6.0	mA	-40°C	3.3V	16 MIPS, FOSC = 32 MHz
DC43a		6.0		+25°C		
DC43b		6.0		+60°C		
DC43c		6.0		+85°C		
DC44	0.56	0.74	mA	-40°C	1.8V	FRC (4 MIPS), FOSC = 8 MHz
DC44a		0.74		+25°C		
DC44b		0.74		+60°C		
DC44c		0.74		+85°C		
DC44d	0.95	1.50	mA	-40°C	3.3V	
DC44e		1.50		+25°C		
DC44f		1.50		+60°C		
DC44g		1.50		+85°C		
DC50	2	18	μA	-40°C	1.8V	LPRC (31 kHz)
DC50a		18		+25°C		
DC50b		18		+60°C		
DC50c		18		+85°C		
DC50d	4	40	μA	-40°C	3.3V	
DC50e		40		+25°C		
DC50f		40		+60°C		
DC50g		40		+85°C		

Note 1: Data in "Typical" column is at 3.3V, 25°C unless otherwise stated. Parameters are for design guidance only and are not tested.

2: Operating Parameters:
- Core off
- EC mode with clock input driven with a square wave rail-to-rail
- I/O configured as outputs driven low
- $\overline{MCLR}$ – VDD
- WDT FSCM disabled
- SRAM, program and data memory active
- All PMD bits set except for modules being measured

 © 2009 Microchip Technology Inc.

TABLE 26-8: DC CHARACTERISTICS: POWER-DOWN CURRENT (IPD)

DC CHARACTERISTICS			Standard Operating Conditions: 1.8V to 3.6V (unless otherwise stated) Operating temperature -40°C ≤ TA ≤ +85°C for Industrial			
Parameter No.	**Typical(1)**	**Max**	**Units**	**Conditions**		
Power-Down Current (IPD): PMD Bits are Set, PMSLP Bit is '0'(2)						
DC60	0.025	0.200	μA	-40°C	1.8V	Base Power-Down Current (Sleep)(3)
DC60a		0.200		+25°C		
DC60b		0.870		+60°C		
DC60c		1.350		+85°C		
DC60d	0.105	0.540	μA	-40°C	3.3V	
DC60e		0.540		+25°C		
DC60f		1.680		+60°C		
DC60g		2.450		+85°C		
DC70	0.020	0.150	μA	-40°C	1.8V	Base Deep Sleep Current
DC70a		0.150		+25°C		
DC70b		0.430		+60°C		
DC70c		0.630		+85°C		
DC70d	0.035	0.300	μA	-40°C	3.3V	
DC70e		0.300		+25°C		
DC70f		0.700		+60°C		
DC70g		0.980		+85°C		
DC61	0.55	0.65	μA	-40°C	1.8V	Watchdog Timer Current: WDT(3,4)
DC61a		0.65		+25°C		
DC61b		0.65		+60°C		
DC61c		0.65		+85°C		
DC61d	0.87	0.95	μA	-40°C	3.3V	
DC61e		0.95		+25°C		
DC61f		0.95		+60°C		
DC61g		0.95		+85°C		

Note 1: Data in the Typical column is at 3.3V, 25°C unless otherwise stated. Parameters are for design guidance only and are not tested.

2: Base IPD is measured with all peripherals and clocks shut down. All I/Os are configured as inputs and pulled high. WDT, etc., are all switched off.

3: The Δ current is the additional current consumed when the module is enabled. This current should be added to the base IPD current.

4: Current applies to Sleep only.

5: Current applies to Deep Sleep only.

TABLE 26-8: DC CHARACTERISTICS: POWER-DOWN CURRENT (IPD) (CONTINUED)

DC CHARACTERISTICS			Standard Operating Conditions: 1.8V to 3.6V (unless otherwise stated) Operating temperature -40°C ≤ TA ≤ +85°C for Industrial			
Parameter No.	**Typical(1)**	**Max**	**Units**	**Conditions**		
Power-Down Current (IPD): PMD Bits are Set, PMSLP Bit is '0'(2)						
DC62	0.450	0.650	μA	-40°C	1.8V	Timer1 w/32 kHz Crystal: T132 (SOSC – LP)(3)
DC62a		0.650		+25°C		
DC62b		0.650		+60°C		
DC62c		0.650		+85°C		
DC62d	0.730	0.980	μA	-40°C	3.3V	
DC62e		0.980		+25°C		
DC62f		0.980		+60°C		
DC62g		0.980		+85°C		
DC64	5.5	7.10	μA	-40°C	1.8V	HLVD(3,4)
DC64a		7.10		+25°C		
DC64b		7.80		+60°C		
DC64c		8.30		+85°C		
DC64d	6.2	7.10	μA	-40°C	3.3V	
DC64e		7.10		+25°C		
DC64f		7.80		+60°C		
DC64g		8.30		+85°C		
DC63	4.5	6.60	μA	-40°C	3.3V	BOR(3,4)
DC63a		6.60		+25°C		
DC63b		6.60		+60°C		
DC63c		6.60		+85°C		

Note 1: Data in the Typical column is at 3.3V, 25°C unless otherwise stated. Parameters are for design guidance only and are not tested.

2: Base IPD is measured with all peripherals and clocks shut down. All I/Os are configured as inputs and pulled high. WDT, etc., are all switched off.

3: The Δ current is the additional current consumed when the module is enabled. This current should be added to the base IPD current.

4: Current applies to Sleep only.

5: Current applies to Deep Sleep only.

 © 2009 Microchip Technology Inc.

TABLE 26-8: DC CHARACTERISTICS: POWER-DOWN CURRENT (IPD) (CONTINUED)

DC CHARACTERISTICS			Standard Operating Conditions: 1.8V to 3.6V (unless otherwise stated) Operating temperature -40°C ≤ TA ≤ +85°C for Industrial			
Parameter No.	**Typical(1)**	**Max**	**Units**	**Conditions**		
Power-Down Current (IPD): PMD Bits are Set, PMSLP Bit is '0'(2)						
DC70	0.045	0.200	μA	-40°C	1.8V	LPBOR(3,4)
DC70a		0.200		+25°C		
DC70b		0.200		+60°C		
DC70c		0.200		+85°C		
DC70d	0.095	0.200	μA	-40°C	3.3V	
DC70e		0.200		+25°C		
DC70f		0.200		+60°C		
DC70g		0.200		+85°C		
DC71	0.35	0.55	μA	-40°C	1.8V	Deep Sleep Watchdog Timer: DSWDT (SOSC – LP)(5)
DC71a		0.55		+25°C		
DC71b		0.55		+60°C		
DC71c		0.55		+85°C		
DC71d	0.55	0.75	μA	-40°C	3.3V	
DC71e		0.75		+25°C		
DC71f		0.75		+60°C		
DC71g		0.75		+85°C		
DC72	0.005	0.200	μA	-40°C	1.8V	Deep Sleep BOR: DSBOR(3,5)
DC72a		0.200		+25°C		
DC72b		0.200		+60°C		
DC72c		0.200		+85°C		
DC72d	0.010	0.200	μA	-40°C	3.3V	
DC72e		0.200		+25°C		
DC72f		0.200		+60°C		
DC72g		0.200		+85°C		

Note 1: Data in the Typical column is at 3.3V, 25°C unless otherwise stated. Parameters are for design guidance only and are not tested.

2: Base IPD is measured with all peripherals and clocks shut down. All I/Os are configured as inputs and pulled high. WDT, etc., are all switched off.

3: The Δ current is the additional current consumed when the module is enabled. This current should be added to the base IPD current.

4: Current applies to Sleep only.

5: Current applies to Deep Sleep only.

TABLE 26-9: DC CHARACTERISTICS: I/O PIN INPUT SPECIFICATIONS

DC CHARACTERISTICS			Standard Operating Conditions: 1.8V to 3.6V (unless otherwise stated) Operating temperature -40°C ≤ TA ≤ +85°C for Industrial				
Param No.	**Sym**	**Characteristic**	**Min**	**Typ(1)**	**Max**	**Units**	**Conditions**
	VIL	**Input Low Voltage(4)**	—	—	—	—	
DI10		I/O Pins	VSS	—	0.2 VDD	V	
DI15		$\overline{\text{MCLR}}$	VSS	—	0.2 VDD	V	
DI16		OSCI (XT mode)	VSS	—	0.2 VDD	V	
DI17		OSCI (HS mode)	VSS	—	0.2 VDD	V	
DI18		I/O Pins with I2C™ Buffer	VSS	—	0.3 VDD	V	SMBus disabled
DI19		I/O Pins with SMBus Buffer	VSS	—	0.8	V	SMBus enabled
	VIH	**Input High Voltage(4)**	—	—	—	—	
DI20		I/O Pins:					
		with Analog Functions	0.8 VDD	—	VDD	V	
		Digital Only	0.8 VDD	—	VDD	V	
DI25		$\overline{\text{MCLR}}$	0.8 VDD	—	VDD	V	
DI26		OSCI (XT mode)	0.7 VDD	—	VDD	V	
DI27		OSCI (HS mode)	0.7 VDD	—	VDD	V	
DI28		I/O Pins with I2C Buffer:					
		with Analog Functions	0.7 VDD	—	VDD	V	
		Digital Only	0.7 VDD	—	VDD	V	
DI29		I/O Pins with SMBus	2.1	—	VDD	V	2.5V ≤ VPIN ≤ VDD
DI30	ICNPU	**CNx Pull-up Current**	50	250	500	μA	VDD = 3.3V, VPIN = VSS
	IIL	**Input Leakage Current(2,3)**					
DI50		I/O Ports	—	0.050	±0.100	μA	VSS ≤ VPIN ≤ VDD, Pin at high-impedance
DI51		VREF+, VREF-, AN0, AN1	—	0.300	±0.500	μA	VSS ≤ VPIN ≤ VDD, Pin at high-impedance
DI55		$\overline{\text{MCLR}}$	—	—	±5.0	μA	VSS ≤ VPIN ≤ VDD
DI56		OSCI	—	—	±5.0	μA	VSS ≤ VPIN ≤ VDD, XT and HS modes

Note 1: Data in "Typ" column is at 3.3V, 25°C unless otherwise stated. Parameters are for design guidance only and are not tested.

2: The leakage current on the $\overline{\text{MCLR}}$ pin is strongly dependent on the applied voltage level. The specified levels represent normal operating conditions. Higher leakage current may be measured at different input voltages.

3: Negative current is defined as current sourced by the pin.

4: Refer to Table 1-2 for I/O pin buffer types.

 © 2009 Microchip Technology Inc.

TABLE 26-10: DC CHARACTERISTICS: I/O PIN OUTPUT SPECIFICATIONS

DC CHARACTERISTICS			Standard Operating Conditions: 1.8V to 3.6V (unless otherwise stated) Operating temperature -40°C ≤ TA ≤ +85°C for Industrial				
Param No.	**Sym**	**Characteristic**	**Min**	**Typ(1)**	**Max**	**Units**	**Conditions**
	VOL	**Output Low Voltage**					
DO10		All I/O Pins	—	—	0.4	V	IOL = 6.5 mA, VDD = 3.6V
			—	—	0.4	V	IOL = 3.5 mA, VDD = 2.0V
DO16		OSC2/CLKO	—	—	0.4	V	IOL = 8.0 mA, VDD = 3.6V
			—	—	0.4	V	IOL = 4.5 mA, VDD = 1.8V
	VOH	**Output High Voltage**	—	—	—	—	—
DO20		All I/O Pins	3	—	—	V	IOH = -3.0 mA, VDD = 3.6V
			1.8	—	—	V	IOH = -1.0 mA, VDD = 2.0V
DO26		OSC2/CLKO	3	—	—	V	IOH = -2.5 mA, VDD = 3.6V
			1.8	—	—	V	IOH = -1.0 mA, VDD = 2.0V

Note 1: Data in “Typ” column is at 25°C unless otherwise stated. Parameters are for design guidance only and are not tested.

TABLE 26-11: DC CHARACTERISTICS: PROGRAM MEMORY

DC CHARACTERISTICS			Standard Operating Conditions: 1.8V to 3.6V (unless otherwise stated) Operating temperature -40°C ≤ TA ≤ +85°C for Industrial				
Param No.	**Sym**	**Characteristic**	**Min**	**Typ(1)**	**Max**	**Units**	**Conditions**
		Program Flash Memory					
D130	EP	Cell Endurance	10,000(2)	—	—	E/W	
D131	VPR	VDD for Read	VMIN	—	3.6	V	VMIN = Minimum operating voltage
D132	VPEW	Supply Voltage for Self-Timed Writes	2.2	—	3.6	V	
D133A	TIW	Self-Timed Write Cycle Time	—	2	—	ms	
D134	TRETD	Characteristic Retention	40	—	—	Year	Provided no other specifications are violated
D135	IDDP	Supply Current During Programming	—	10	—	mA	

Note 1: Data in “Typ” column is at 3.3V, 25°C unless otherwise stated.
2: Self-write and block erase.

TABLE 26-12: COMPARATOR DC SPECIFICATIONS

Operating Conditions: 2.0V < VDD < 3.6V, -40°C < TA < +85°C (unless otherwise stated)							
Param No.	**Symbol**	**Characteristic**	**Min**	**Typ**	**Max**	**Units**	**Comments**
D300	VIOFF	Input Offset Voltage*	—	20	40	mV	
D301	VICM	Input Common Mode Voltage*	0	—	VDD	V	
D302	CMRR	Common Mode Rejection Ratio*	55	—	—	dB	

* Parameters are characterized but not tested.

TABLE 26-13: COMPARATOR VOLTAGE REFERENCE DC SPECIFICATIONS

Operating Conditions: 2.0V < VDD < 3.6V, -40°C < TA < +85°C (unless otherwise stated)							
Param No.	**Symbol**	**Characteristic**	**Min**	**Typ**	**Max**	**Units**	**Comments**
VRD310	CVRES	Resolution	VDD/24	—	VDD/32	LSb	
VRD311	CVRAA	Absolute Accuracy	—	—	AVDD – 1.5	LSb	
VRD312	CVRUR	Unit Resistor Value (R)	—	2k	—	Ω	

TABLE 26-14: CTMU CURRENT SOURCE SPECIFICATIONS

DC CHARACTERISTICS			Standard Operating Conditions: 2.0V to 3.6V (unless otherwise stated) Operating temperature -40°C ≤ TA ≤ +85°C for Industrial				
Param No.	**Sym**	**Characteristic**	**Min**	**Typ(1)**	**Max**	**Units**	**Conditions**
	IOUT1	CTMU Current Source, Base Range	—	550	—	nA	CTMUICON<1:0> = 01
	IOUT2	CTMU Current Source, 10x Range	—	5.5	—	μA	CTMUICON<1:0> = 10
	IOUT3	CTMU Current Source, 100x Range	—	55	—	μA	CTMUICON<1:0> = 11

Note 1: Nominal value at center point of current trim range (CTMUICON<7:2> = 000000)

TABLE 26-15: COMPARATOR TIMINGS

Param No.	Symbol	Characteristic	Min	Typ	Max	Units	Comments
300	TRESP	Response Time*(1)	—	150	400	ns	
301	TMC2OV	Comparator Mode Change to Output Valid*	—	—	10	μs	

* Parameters are characterized but not tested.

Note 1: Response time measured with one comparator input at (VDD – 1.5)/2, while the other input transitions from VSS to VDD.

TABLE 26-16: COMPARATOR VOLTAGE REFERENCE SETTLING TIME SPECIFICATIONS

Param No.	Symbol	Characteristic	Min	Typ	Max	Units	Comments
VR310	TSET	Settling Time(1)	—	—	10	μs	

Note 1: Settling time measured while CVRR = 1 and CVR<3:0> bits transition from '0000' to '1111'.

 © 2009 Microchip Technology Inc.

26.2 AC Characteristics and Timing Parameters

The information contained in this section defines the PIC24F04KA201 family AC characteristics and timing parameters.

TABLE 26-17: TEMPERATURE AND VOLTAGE SPECIFICATIONS – AC

AC CHARACTERISTICS	**Standard Operating Conditions: 1.8V to 3.6V (unless otherwise stated)** Operating temperature -40°C ≤ TA ≤ +85°C for Industrial Operating voltage VDD range as described in **Section 26.1 "DC Characteristics"**.

FIGURE 26-2: LOAD CONDITIONS FOR DEVICE TIMING SPECIFICATIONS

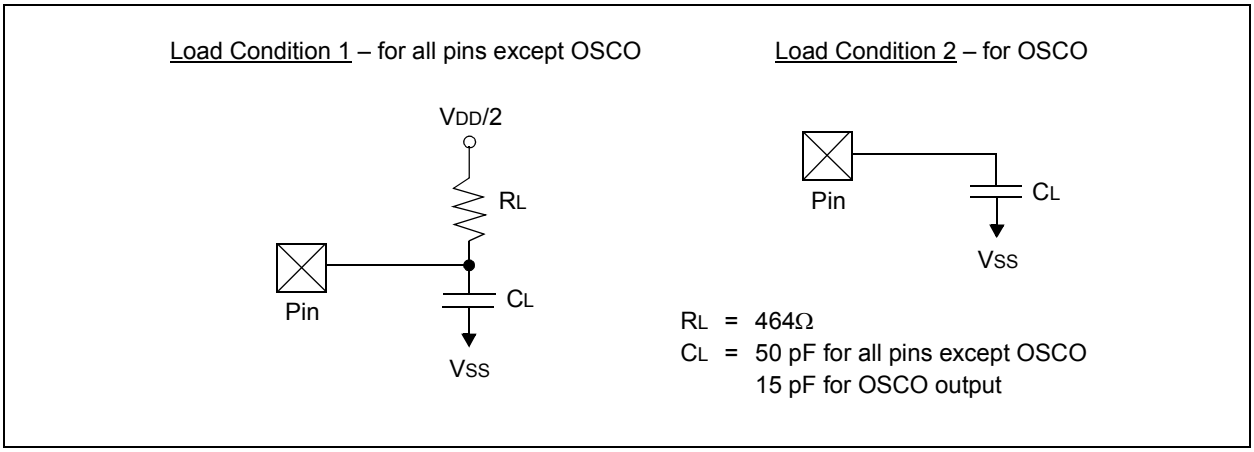

TABLE 26-18: CAPACITIVE LOADING REQUIREMENTS ON OUTPUT PINS

Param No.	Symbol	Characteristic	Min	Typ(1)	Max	Units	Conditions
DO50	COSC2	OSCO/CLKO pin	—	—	15	pF	In XT and HS modes when external clock is used to drive OSCI
DO56	CIO	All I/O Pins and OSCO	—	—	50	pF	EC mode
DO58	CB	SCLx, SDAx	—	—	400	pF	In I²C™ mode

Note 1: Data in "Typ" column is at 3.3V, 25°C unless otherwise stated. Parameters are for design guidance only and are not tested.

FIGURE 26-3: EXTERNAL CLOCK TIMING

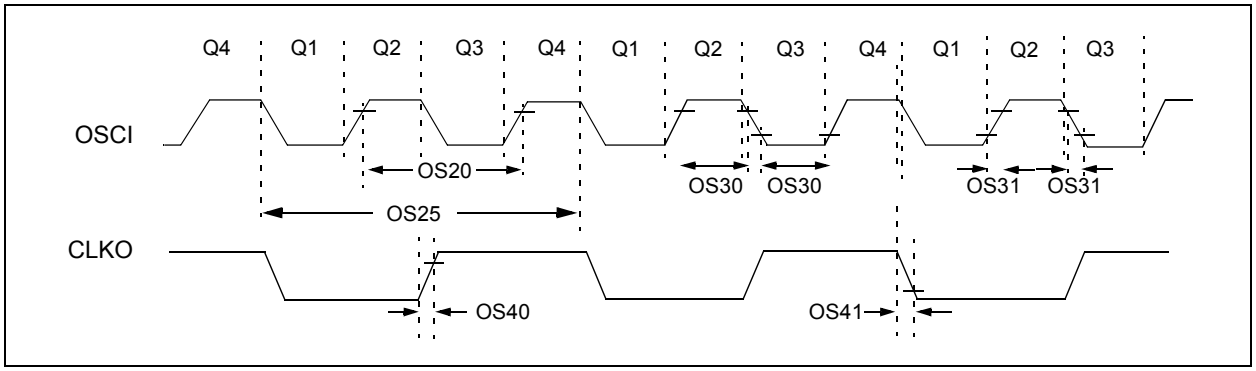

TABLE 26-19: EXTERNAL CLOCK TIMING REQUIREMENTS

AC CHARACTERISTICS			Standard Operating Conditions: 1.8 to 3.6V (unless otherwise stated) Operating temperature -40°C ≤ TA ≤ +85°C for Industrial				
Param No.	**Sym**	**Characteristic**	**Min**	**Typ(1)**	**Max**	**Units**	**Conditions**
OS10	FOSC	External CLKI Frequency (External clocks allowed only in EC mode)	DC 4	— —	32 8	MHz MHz	EC ECPLL
		Oscillator Frequency	0.2 4 4 31	— — — —	4 25 8 33	MHz MHz MHz kHz	XT HS HSPLL SOSC
OS20	TOSC	TOSC = 1/FOSC	—	—	—	—	See parameter OS10 for FOSC value
OS25	TCY	Instruction Cycle Time(2)	62.5	—	DC	ns	
OS30	TosL, TosH	External Clock in (OSCI) High or Low Time	0.45 x TOSC	—	—	ns	EC
OS31	TosR, TosF	External Clock in (OSCI) Rise or Fall Time	—	—	20	ns	EC
OS40	TckR	CLKO Rise Time(3)	—	6	10	ns	
OS41	TckF	CLKO Fall Time(3)	—	6	10	ns	

Note 1: Data in “Typ” column is at 3.3V, 25°C unless otherwise stated. Parameters are for design guidance only and are not tested.

2: Instruction cycle period (TCY) equals two times the input oscillator time base period. All specified values are based on characterization data for that particular oscillator type under standard operating conditions with the device executing code. Exceeding these specified limits may result in an unstable oscillator operation and/or higher than expected current consumption. All devices are tested to operate at “Min.” values with an external clock applied to the OSCI/CLKI pin. When an external clock input is used, the “Max.” cycle time limit is “DC” (no clock) for all devices.

3: Measurements are taken in EC mode. The CLKO signal is measured on the OSCO pin. CLKO is low for the Q1-Q2 period (1/2 TCY) and high for the Q3-Q4 period (1/2 TCY).

 © 2009 Microchip Technology Inc.

TABLE 26-20: PLL CLOCK TIMING SPECIFICATIONS (V_{DD} = 1.8V TO 3.6V)

AC CHARACTERISTICS			Standard Operating Conditions: 1.8V to 3.6V (unless otherwise stated) Operating temperature -40°C ≤ TA ≤ +85°C for Industrial				
Param No.	**Sym**	**Characteristic(1)**	**Min**	**Typ(2)**	**Max**	**Units**	**Conditions**
OS50	FPLLI	PLL Input Frequency Range	4	—	8	MHz	ECPLL, HSPLL modes
OS51	FSYS	PLL Output Frequency Range	16	—	32	MHz	
OS52	TLOCK	PLL Start-up Time (Lock Time)	—	—	2	ms	
OS53	DCLK	CLKO Stability (Jitter)	-2	1	2	%	Measured over 100 ms period

Note 1: These parameters are characterized but not tested in manufacturing.

2: Data in "Typ" column is at 3.3V, 25°C unless otherwise stated. Parameters are for design guidance only and are not tested.

TABLE 26-21: AC CHARACTERISTICS: INTERNAL RC ACCURACY

AC CHARACTERISTICS		Standard Operating Conditions: 1.8V to 3.6V (unless otherwise stated) Operating temperature -40°C ≤ TA ≤ +85°C for Industrial					
Param No.	**Characteristic**	**Min**	**Typ**	**Max**	**Units**	**Conditions**	
F20	**Internal FRC Accuracy @ 8 MHz(1)**						
	FRC	-2	—	2	%	+25°C	3.0V ≤ VDD ≤ 3.6V
		-5	—	5	%	-40°C ≤ TA ≤ +85°C	

Note 1: Frequency calibrated at 25°C and 3.3V. OSCTUN bits can be used to compensate for temperature drift.

TABLE 26-22: AC CHARACTERISTICS: INTERNAL RC ACCURACY

AC CHARACTERISTICS		Standard Operating Conditions: 1.8V to 3.6V (unless otherwise stated) Operating temperature -40°C ≤ TA ≤ +85°C for Industrial					
Param No.	**Characteristic**	**Min**	**Typ**	**Max**	**Units**	**Conditions**	
F21	**LPRC @ 31 kHz(1)**						
		-15	—	15	%	+25°C	3.0V ≤ VDD ≤ 3.6V
		-15	—	15	%	-40°C ≤ TA ≤ +85°C	

Note 1: Change of LPRC frequency as VDD changes.

FIGURE 26-4: CLKO AND I/O TIMING CHARACTERISTICS

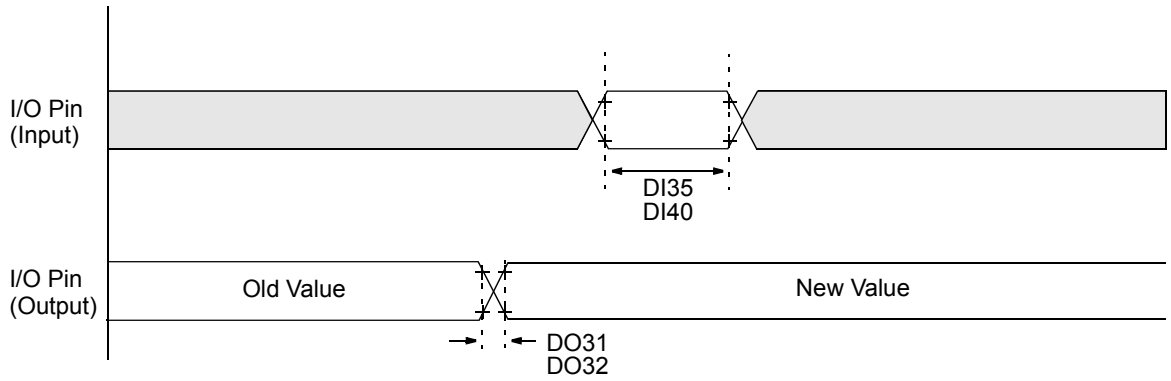

Note: Refer to Figure 26-2 for load conditions.

TABLE 26-23: CLKO AND I/O TIMING REQUIREMENTS

AC CHARACTERISTICS			Standard Operating Conditions: 1.8V to 3.6V (unless otherwise stated) Operating temperature -40°C ≤ TA ≤ +85°C for Industrial				
Param No.	**Sym**	**Characteristic**	**Min**	**Typ(1)**	**Max**	**Units**	**Conditions**
DO31	TIOR	Port Output Rise Time	—	10	25	ns	
DO32	TIOF	Port Output Fall Time	—	10	25	ns	
DI35	TINP	INTx pin High or Low Time (output)	20	—	—	ns	
DI40	TRBP	CNx High or Low Time (input)	2	—	—	TCY	

Note 1: Data in “Typ” column is at 3.3V, 25°C unless otherwise stated.

 © 2009 Microchip Technology Inc.

TABLE 26-24: ADC MODULE SPECIFICATIONS

AC CHARACTERISTICS			Standard Operating Conditions: 1.8V to 3.6V (unless otherwise stated) Operating temperature -40°C ≤ TA ≤ +85°C for Industrial				
Param No.	**Symbol**	**Characteristic**	**Min.**	**Typ**	**Max.**	**Units**	**Conditions**
Device Supply							
AD01	AVDD	Module VDD Supply	Greater of VDD – 0.3 or 1.8	—	Lesser of VDD + 0.3 or 3.6	V	
AD02	AVSS	Module VSS Supply	VSS – 0.3	—	VSS + 0.3	V	
Reference Inputs							
AD05	VREFH	Reference Voltage High	AVSS + 1.7	—	AVDD	V	
AD06	VREFL	Reference Voltage Low	AVSS	—	AVDD – 1.7	V	
AD07	VREF	Absolute Reference Voltage	AVSS – 0.3	—	AVDD + 0.3	V	
Analog Input							
AD10	VINH-VINL	Full-Scale Input Span	VREFL	—	VREFH	V	**(Note 2)**
AD11	VIN	Absolute Input Voltage	AVSS – 0.3	—	AVDD + 0.3	V	
AD12	VINL	Absolute VINL Input Voltage	AVSS – 0.3		AVDD/2	V	
AD17	RIN	Recommended Impedance of Analog Voltage Source	—	—	2.5K	Ω	10-bit
ADC Accuracy							
AD20b	NR	Resolution	—	10	—	bits	
AD21b	INL	Integral Nonlinearity	—	±1	±2	LSb	VINL = AVSS = VREFL = 0V, AVDD = VREFH = 3V
AD22b	DNL	Differential Nonlinearity	—	±1	±1.5	LSb	VINL = AVSS = VREFL = 0V, AVDD = VREFH = 3V
AD23b	GERR	Gain Error	—	±1	±3	LSb	VINL = AVSS = VREFL = 0V, AVDD = VREFH = 3V
AD24b	EOFF	Offset Error	—	±1	±2	LSb	VINL = AVSS = VREFL = 0V, AVDD = VREFH = 3V
AD25b		Monotonicity(1)	—	—	—	—	Guaranteed

Note 1: The ADC conversion result never decreases with an increase in the input voltage and has no missing codes.

2: Measurements taken with external VREF+ and VREF- used as the ADC voltage reference.

TABLE 26-25: ADC CONVERSION TIMING REQUIREMENTS(1)

AC CHARACTERISTICS			Standard Operating Conditions: 1.8V to 3.6V (unless otherwise stated) Operating temperature -40°C ≤ TA ≤ +85°C for Industrial				
Param No.	**Symbol**	**Characteristic**	**Min.**	**Typ**	**Max.**	**Units**	**Conditions**
Clock Parameters							
AD50	TAD	ADC Clock Period	75	—	—	ns	TCY = 75 ns, AD1CON3 in default state
AD51	TRC	ADC Internal RC Oscillator Period	—	250	—	ns	
Conversion Rate							
AD55	TCONV	Conversion Time	—	12	—	TAD	
AD56	FCNV	Throughput Rate	—	—	500	ksps	AVDD ≥ 2.7V
AD57	TSAMP	Sample Time	—	1	—	TAD	
AD58	TACQ	Acquisition Time	750	—	—	ns	**(Note 2)**
AD59	TSWC	Switching Time from Convert to Sample	—	—	**(Note 3)**		
AD60	TDIS	Discharge Time	0.5	—	—	TAD	
Clock Parameters							
AD61	TPSS	Sample Start Delay from setting Sample bit (SAMP)	2	—	3	TAD	

Note 1: Because the sample caps will eventually lose charge, clock rates below 10 kHz can affect linearity performance, especially at elevated temperatures.

2: The time for the holding capacitor to acquire the “New” input voltage when the voltage changes full scale after the conversion (VDD to VSS or VSS to VDD).

3: On the following cycle of the device clock.

 © 2009 Microchip Technology Inc.

TABLE 26-26: RESET, WATCHDOG TIMER, OSCILLATOR START-UP TIMER, POWER-UP TIMER AND BROWN-OUT RESET TIMING REQUIREMENTS

AC CHARACTERISTICS			Standard Operating Conditions: 1.8V to 3.6V (unless otherwise stated) Operating temperature -40°C ≤ TA ≤ +85°C for Industrial				
Param No.	**Symbol**	**Characteristic**	**Min.**	**Typ(1)**	**Max.**	**Units**	**Conditions**
SY10	TmcL	$\overline{\text{MCLR}}$ Pulse Width (low)	2	—	—	μs	
SY11	TPWRT	Power-up Timer Period	50	64	90	ms	
SY12	TPOR	Power-on Reset Delay	1	5	10	μs	
SY13	TIOZ	I/O High-Impedance from $\overline{\text{MCLR}}$ Low or Watchdog Timer Reset	—	—	100	ns	
SY20	TWDT	Watchdog Timer Time-out Period	0.85	1.0	1.15	ms	1.32 prescaler
			3.4	4.0	4.6	ms	1:128 prescaler
SY25	TBOR	Brown-out Reset Pulse Width	1	—	—	μs	
SY35	TFSCM	Fail-Safe Clock Monitor Delay	—	2	2.3	μs	
SY45	TRST	Configuration Update Time	—	20	—	μs	
	TVREG	On-Chip Voltage Regulator Output Delay	—	10	—	μs	
SY55	TLOCK	PLL Start-up Time	—	1	—	ms	
SY65	TOST	Oscillator Start-up Time	—	1024	—	TOSC	
SY75	TFRC	Fast RC Oscillator Start-up Time	—	1	1.5	μs	
SY85	TLPRC	Low-Power Oscillator Start-up Time	—	—	100	μs	

Note 1: Data in “Typ” column is at 3.3V, 25°C unless otherwise stated.

NOTES:

 © 2009 Microchip Technology Inc.

27.0 PACKAGING INFORMATION

27.1 Package Marking Information

14-Lead PDIP

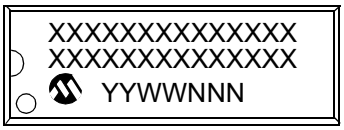

Example

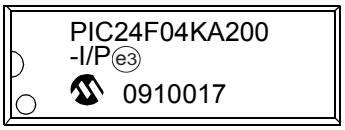

14-Lead TSSOP

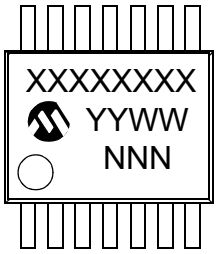

Example

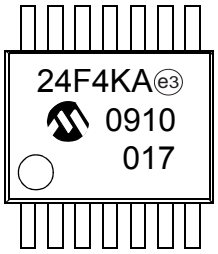

20-Lead PDIP

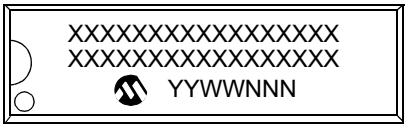

Example

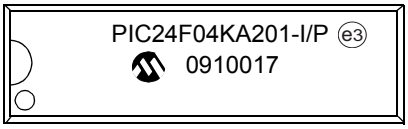

Legend:	XX...X	Product-specific information
	Y	Year code (last digit of calendar year)
	YY	Year code (last 2 digits of calendar year)
	WW	Week code (week of January 1 is week ‘01’)
	NNN	Alphanumeric traceability code
	e3	Pb-free JEDEC designator for Matte Tin (Sn)
	*	This package is Pb-free. The Pb-free JEDEC designator (e3) can be found on the outer packaging for this package.
Note:	In the event the full Microchip part number cannot be marked on one line, it will be carried over to the next line, thus limiting the number of available characters for customer-specific information.	

20-Lead SSOP

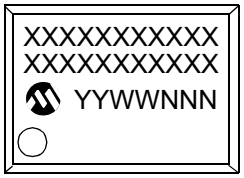

Example

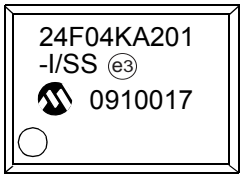

20-Lead SOIC (.300”)

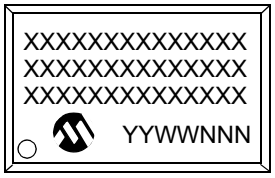

Example

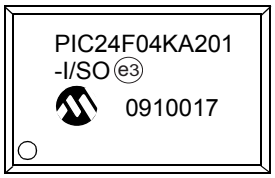

20-Lead QFN

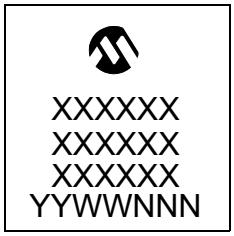

Example

 © 2009 Microchip Technology Inc.

27.2 Package Details

The following sections give the technical details of the packages.

14-Lead Plastic Dual In-Line (P) – 300 mil Body [PDIP]

Note: For the most current package drawings, please see the Microchip Packaging Specification located at http://www.microchip.com/packaging

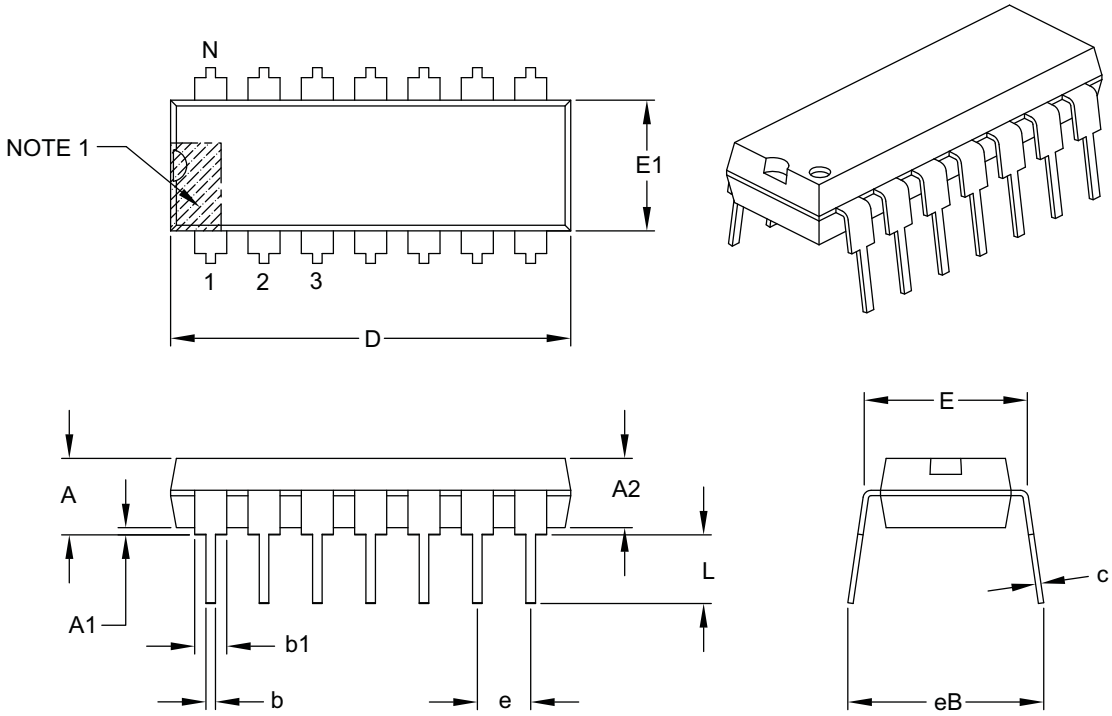

Units		INCHES		
Dimension Limits		MIN	NOM	MAX
Number of Pins	N	14		
Pitch	e	.100 BSC		
Top to Seating Plane	A	–	–	.210
Molded Package Thickness	A2	.115	.130	.195
Base to Seating Plane	A1	.015	–	–
Shoulder to Shoulder Width	E	.290	.310	.325
Molded Package Width	E1	.240	.250	.280
Overall Length	D	.735	.750	.775
Tip to Seating Plane	L	.115	.130	.150
Lead Thickness	c	.008	.010	.015
Upper Lead Width	b1	.045	.060	.070
Lower Lead Width	b	.014	.018	.022
Overall Row Spacing §	eB	–	–	.430

Notes:

1. Pin 1 visual index feature may vary, but must be located with the hatched area.
2. § Significant Characteristic.
3. Dimensions D and E1 do not include mold flash or protrusions. Mold flash or protrusions shall not exceed .010" per side.
4. Dimensioning and tolerancing per ASME Y14.5M.
   BSC: Basic Dimension. Theoretically exact value shown without tolerances.

Microchip Technology Drawing C04-005B

14-Lead Plastic Thin Shrink Small Outline (ST) – 4.4 mm Body [TSSOP]

Note: For the most current package drawings, please see the Microchip Packaging Specification located at http://www.microchip.com/packaging

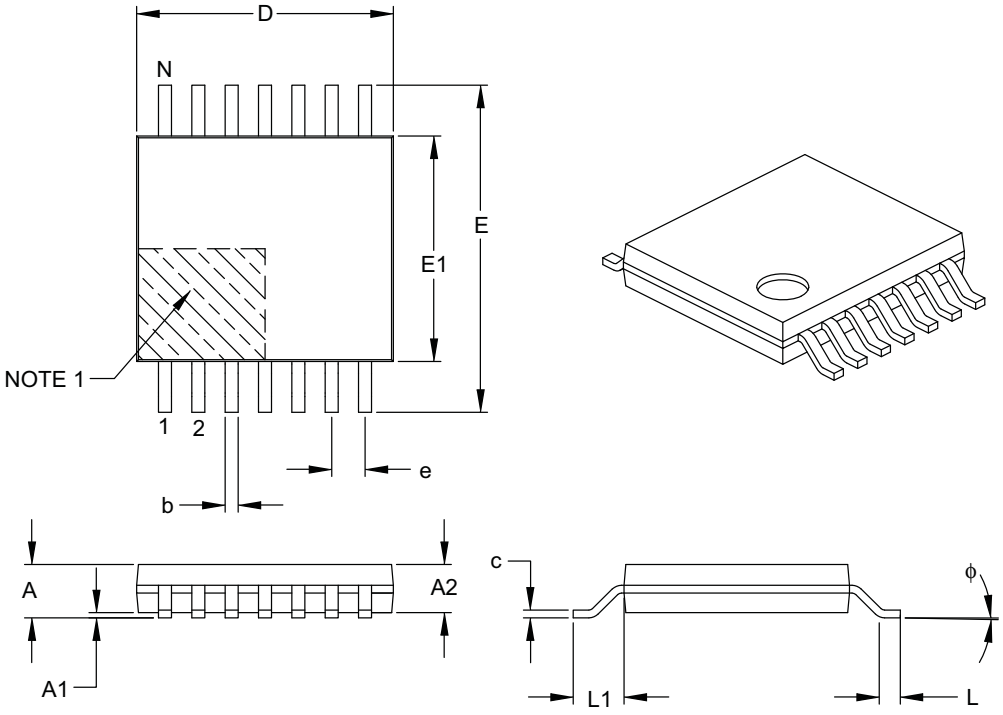

Units		MILLIMETERS		
Dimension Limits		MIN	NOM	MAX
Number of Pins	N	14		
Pitch	e	0.65 BSC		
Overall Height	A	–	–	1.20
Molded Package Thickness	A2	0.80	1.00	1.05
Standoff	A1	0.05	–	0.15
Overall Width	E	6.40 BSC		
Molded Package Width	E1	4.30	4.40	4.50
Molded Package Length	D	4.90	5.00	5.10
Foot Length	L	0.45	0.60	0.75
Footprint	L1	1.00 REF		
Foot Angle	ϕ	0°	–	8°
Lead Thickness	c	0.09	–	0.20
Lead Width	b	0.19	–	0.30

Notes:

1. Pin 1 visual index feature may vary, but must be located within the hatched area.
2. Dimensions D and E1 do not include mold flash or protrusions. Mold flash or protrusions shall not exceed 0.15 mm per side.
3. Dimensioning and tolerancing per ASME Y14.5M.
   BSC: Basic Dimension. Theoretically exact value shown without tolerances.
   REF: Reference Dimension, usually without tolerance, for information purposes only.

Microchip Technology Drawing C04-087B

 © 2009 Microchip Technology Inc.

20-Lead Plastic Dual In-Line (P) – 300 mil Body [PDIP]

Note: For the most current package drawings, please see the Microchip Packaging Specification located at http://www.microchip.com/packaging

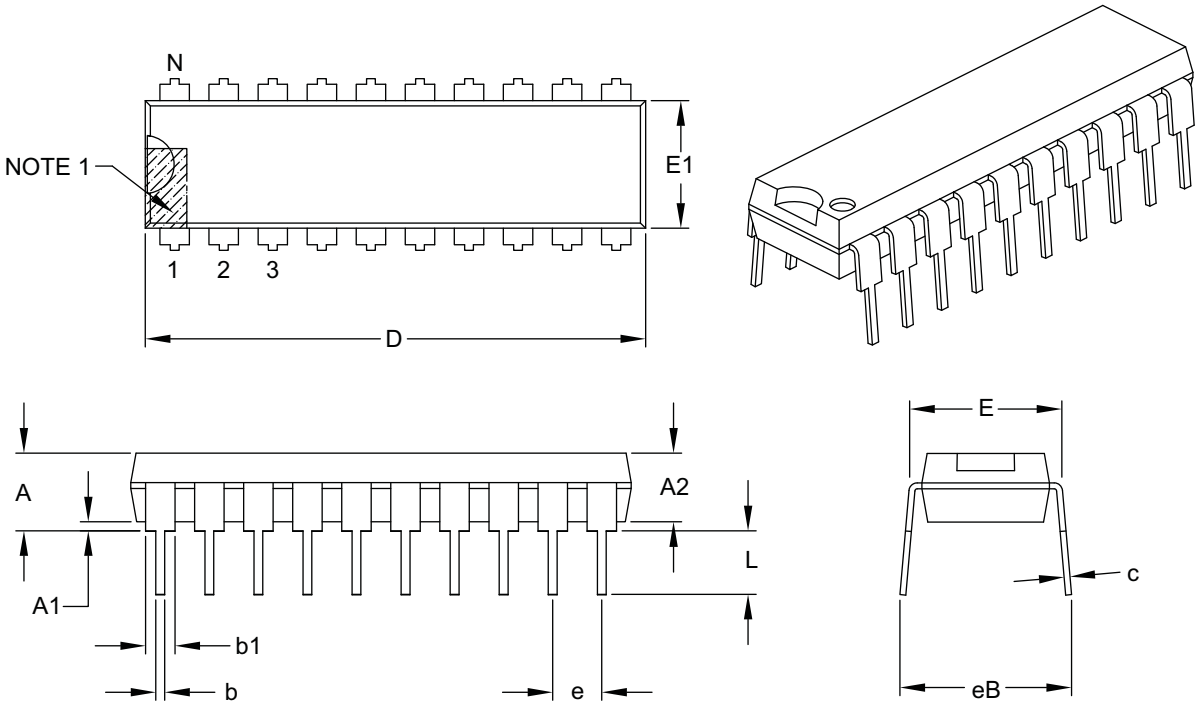

Units		INCHES		
Dimension Limits		MIN	NOM	MAX
Number of Pins	N	20		
Pitch	e	.100 BSC		
Top to Seating Plane	A	–	–	.210
Molded Package Thickness	A2	.115	.130	.195
Base to Seating Plane	A1	.015	–	–
Shoulder to Shoulder Width	E	.300	.310	.325
Molded Package Width	E1	.240	.250	.280
Overall Length	D	.980	1.030	1.060
Tip to Seating Plane	L	.115	.130	.150
Lead Thickness	c	.008	.010	.015
Upper Lead Width	b1	.045	.060	.070
Lower Lead Width	b	.014	.018	.022
Overall Row Spacing §	eB	–	–	.430

Notes:

1. Pin 1 visual index feature may vary, but must be located within the hatched area.
2. § Significant Characteristic.
3. Dimensions D and E1 do not include mold flash or protrusions. Mold flash or protrusions shall not exceed .010" per side.
4. Dimensioning and tolerancing per ASME Y14.5M.

   BSC: Basic Dimension. Theoretically exact value shown without tolerances.

Microchip Technology Drawing C04-019B

20-Lead Plastic Shrink Small Outline (SS) – 5.30 mm Body [SSOP]

Note: For the most current package drawings, please see the Microchip Packaging Specification located at http://www.microchip.com/packaging

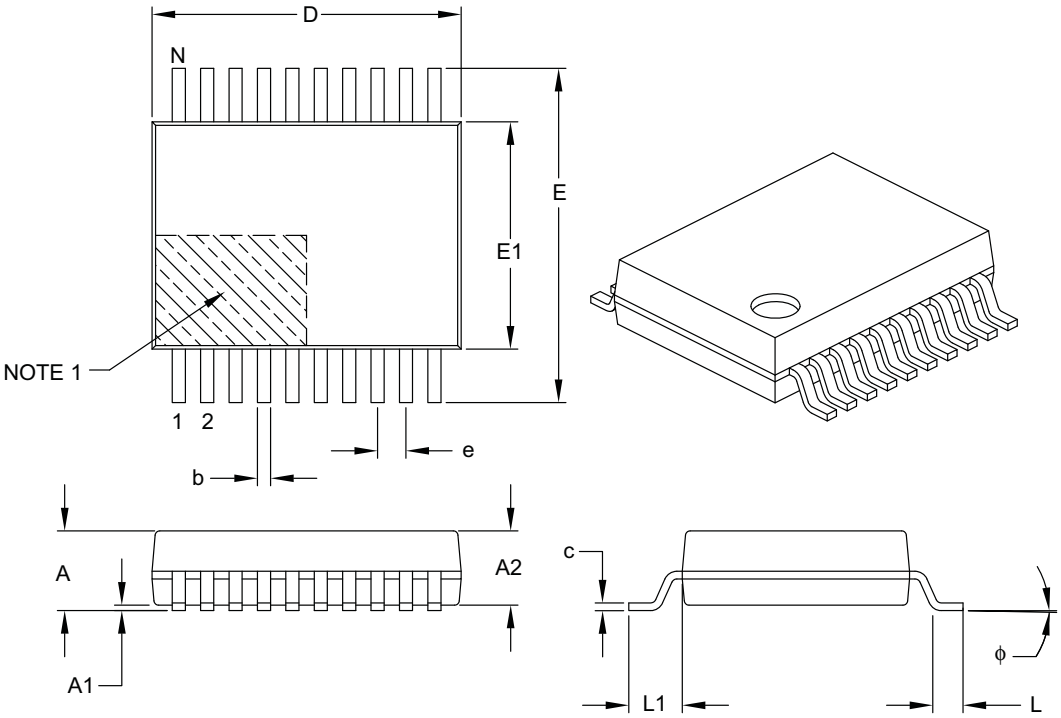

Units		MILLIMETERS		
Dimension Limits		MIN	NOM	MAX
Number of Pins	N	20		
Pitch	e	0.65 BSC		
Overall Height	A	–	–	2.00
Molded Package Thickness	A2	1.65	1.75	1.85
Standoff	A1	0.05	–	–
Overall Width	E	7.40	7.80	8.20
Molded Package Width	E1	5.00	5.30	5.60
Overall Length	D	6.90	7.20	7.50
Foot Length	L	0.55	0.75	0.95
Footprint	L1	1.25 REF		
Lead Thickness	c	0.09	–	0.25
Foot Angle	ϕ	0°	4°	8°
Lead Width	b	0.22	–	0.38

Notes:

1. Pin 1 visual index feature may vary, but must be located within the hatched area.
2. Dimensions D and E1 do not include mold flash or protrusions. Mold flash or protrusions shall not exceed 0.20 mm per side.
3. Dimensioning and tolerancing per ASME Y14.5M.

   BSC: Basic Dimension. Theoretically exact value shown without tolerances.

   REF: Reference Dimension, usually without tolerance, for information purposes only.

Microchip Technology Drawing C04-072B

 © 2009 Microchip Technology Inc.

20-Lead Plastic Small Outline (SO) – Wide, 7.50 mm Body [SOIC]

Note: For the most current package drawings, please see the Microchip Packaging Specification located at http://www.microchip.com/packaging

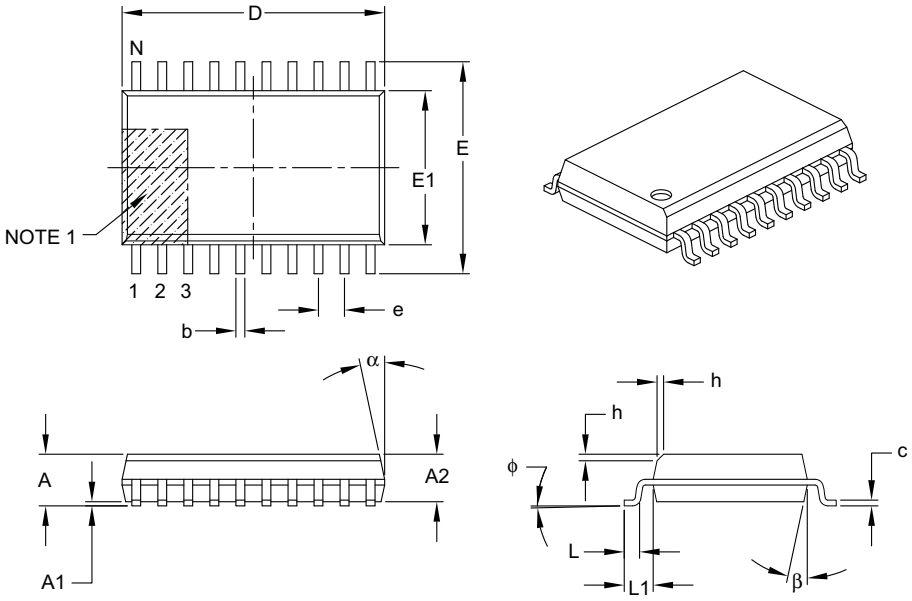

Units		MILLIMETERS		
Dimension Limits		MIN	NOM	MAX
Number of Pins	N	20		
Pitch	e	1.27 BSC		
Overall Height	A	–	–	2.65
Molded Package Thickness	A2	2.05	–	–
Standoff §	A1	0.10	–	0.30
Overall Width	E	10.30 BSC		
Molded Package Width	E1	7.50 BSC		
Overall Length	D	12.80 BSC		
Chamfer (optional)	h	0.25	–	0.75
Foot Length	L	0.40	–	1.27
Footprint	L1	1.40 REF		
Foot Angle	φ	0°	–	8°
Lead Thickness	c	0.20	–	0.33
Lead Width	b	0.31	–	0.51
Mold Draft Angle Top	α	5°	–	15°
Mold Draft Angle Bottom	β	5°	–	15°

Notes:

1. Pin 1 visual index feature may vary, but must be located within the hatched area.
2. § Significant Characteristic.
3. Dimensions D and E1 do not include mold flash or protrusions. Mold flash or protrusions shall not exceed 0.15 mm per side.
4. Dimensioning and tolerancing per ASME Y14.5M.

   BSC: Basic Dimension. Theoretically exact value shown without tolerances.

   REF: Reference Dimension, usually without tolerance, for information purposes only.

Microchip Technology Drawing C04-094B

20-Lead Plastic Quad Flat, No Lead Package (MQ) – 5x5x0.9 mm Body [QFN]

Note: For the most current package drawings, please see the Microchip Packaging Specification located at http://www.microchip.com/packaging

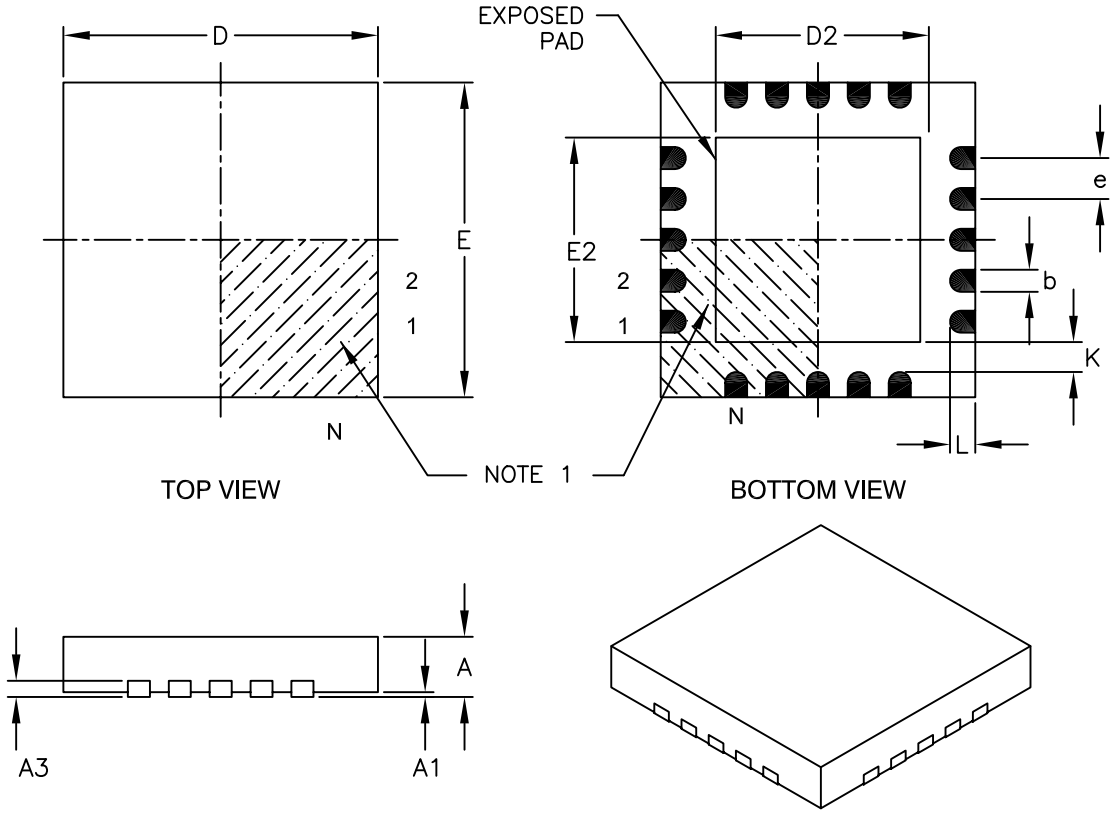

Units		MILLIMETERS		
Dimension Limits		MIN	NOM	MAX
Number of Pins	N	20		
Pitch	e	0.65 BSC		
Overall Height	A	0.80	0.90	1.00
Standoff	A1	0.00	0.02	0.05
Contact Thickness	A3	0.20 REF		
Overall Width	E	5.00 BSC		
Exposed Pad Width	E2	3.15	3.25	3.35
Overall Length	D	5.00 BSC		
Exposed Pad Length	D2	3.15	3.25	3.35
Contact Width	b	0.25	0.30	0.35
Contact Length	L	0.35	0.40	0.45
Contact-to-Exposed Pad	K	0.20	-	-

Notes:
1. Pin 1 visual index feature may vary, but must be located within the hatched area.
2. Package is saw singulated.
3. Dimensioning and tolerancing per ASME Y14.5M.
   BSC: Basic Dimension. Theoretically exact value shown without tolerances.
   REF: Reference Dimension, usually without tolerance, for information purposes only.

Microchip Technology Drawing C04-139B

 © 2009 Microchip Technology Inc.

APPENDIX A: REVISION HISTORY

Revision A (February 2009)

Original data sheet for the PIC24F04KA201 family of devices.

Revision B (May 2009)

The title was changed. **Section 2.0 "Guidelines for Getting Started with 16-Bit Microcontrollers"** was added. Extensive changes to **Section 26.0 "Electrical Characteristics"**. Minor text edits throughout document.

NOTES:

 © 2009 Microchip Technology Inc.

INDEX

A

A/D
- 10-Bit High-Speed A/D Converter 143
- Conversion Timing Requirements 202
- Module Specifications 201
- Reset, Watchdog Timer, Oscillator Start-up Timer, Power-up Timer and Brown-out Reset Timing Requirements 203

A/D Converter
- Analog Input Model 150
- Transfer Function 151

AC Characteristics
- Capacitive Loading Requirements on Output Pins 197
- Comparator 196
- Comparator Voltage Reference Settling Time 196, 200
- CTMU Current Source 196
- Internal RC Accuracy 199
- Load Conditions and Requirements 197
- Temperature and Voltage Specifications 197

Assembler
- MPASM Assembler 174

B

Baud Rate Generator
- Setting as a Bus Master 127

Block Diagrams
- 10-Bit High-Speed A/D Converter 144
- 16-Bit Timer1 101
- Accessing Program Memory with Table Instructions 40
- CALL Stack Frame 37
- Comparator Module 153
- Comparator Voltage Reference 157
- CPU Programmer's Model 21
- CTMU Connections and Internal Configuration for Capacitance Measurement 159
- CTMU Typical Connections and Internal Configuration for Pulse Delay Generation 160
- CTMU Typical Connections and Internal Configuration for Time Measurement 160
- Data Access From Program Space Address Generation 38
- High/Low-Voltage Detect (HLVD) 141
- I^2C Module 126
- Individual Comparator Configurations 154
- Input Capture 109
- Output Compare 114
- PIC24F CPU Core 20
- PIC24F04KA201 Family (General) 10
- PSV Operation 41
- Reset System 51
- Shared I/O Port Structure 99
- Simplified UART 133
- SPI1 Module (Enhanced Buffer Mode) 119
- SPI1 Module (Standard Buffer Mode) 118
- System Clock 81
- Timer2 (16-Bit Synchronous Mode) 105
- Timer2/3 (32-Bit Mode) 104
- Timer3 (16-Bit Synchronous Mode) 105
- Watchdog Timer (WDT) 170

Brown-out Reset (BOR) 55

C

C Compilers
- MPLAB C18 174
- MPLAB C30 174

Charge Time Measurement Unit. *See* CTMU.

Code Examples
- Erasing a Program Memory Row, 'C' Language Code 47
- Erasing a Program Memory Row, Assembly Language Code 46
- I/O Port Write/Read 100
- Initiating a Programming Sequence, 'C' Language Code 49
- Initiating a Programming Sequence, Assembly Language Code 49
- Loading the Write Buffers, 'C' Language Code 48
- Loading the Write Buffers, Assembly Language Code 48
- Programming a Single Word of Flash Program Memory 49
- PWRSAV Instruction Syntax 91
- Sequence for Clock Switching 88

Code Protection 171

Comparator 153

Comparator Voltage Reference 157
- Configuring 157

Configuration Bits 163

Core Features 7

CPU
- ALU 23
- Control Registers 22
- Core Registers 20
- Programmer's Model 19

CTMU
- Measuring Capacitance 159
- Measuring Time 160
- Pulse Delay and Generation 160

Customer Change Notification Service 218

Customer Notification Service 218

Customer Support 218

D

Data Memory
- Address Space 27
- Memory Map 27
- Near Data Space 28
- Organization 28
- SFR Space 28
- Software Stack 37
- Space Width 27

DC Characteristics
- Brown-out Reset Trip Points 188
- Comparator 196
- Comparator Voltage Reference 196
- High/Low-Voltage Detect 187
- I/O Pin Input Specifications 194
- I/O Pin Output Specifications 195
- Idle Current I_{IDLE} 189
- Operating Current I_{DD} 188
- Power-Down Current I_{PD} 191
- Program Memory 195
- Temperature and Voltage Specifications 187

Deep Sleep BOR (DSBOR) 56
Development Support 173
Device Features (Summary) 9
Doze Mode 97

E

Electrical Characteristics
  Absolute Maximum Ratings 185
  Thermal Operating Conditions 186
  V/F Graphs 186
Equations
  A/D Conversion Clock Period 150
  Baud Rate Reload Value 127
  Calculating the PWM Period 112
  Calculation for Maximum PWM Resolution 112
  Device and SPI Clock Speed Relationship 124
  UART Baud Rate with BRGH = 0 134
  UART Baud Rate with BRGH = 1 134
Errata 5

F

Flash Program Memory
  Control Registers 44
  Enhanced ICSP Operation 44
  Operations 44
  Programming Algorithm 46
  RTSP Operation 44
  Table Instructions 43

H

High/Low-Voltage Detect (HLVD) 141

I

I/O Ports
  Analog Port Pins Configuration 100
  Input Change Notification 100
  Open-Drain Configuration 100
  Parallel (PIO) 99
I^2C
  Clock Rates 127
  Communicating as Master in Single
    Master Environment 125
  Pin Remapping Options 125
  Reserved Addresses 127
  Slave Address Masking 127
In-Circuit Serial Programming 171
Input Capture 109
Instruction Set
  Opcode Symbols 178
  Overview 179
  Summary 177
Instruction-Based Power-Saving Modes 91
  Deep Sleep 92
  Idle 92
  Sleep 91
Inter-Integrated Circuit. *See* I^2C.
Internet Address 218
Interrupts
  Alternate Interrupt Vector Table (AIVT) 57
  Implemented Vectors 58
  Interrupt Vector Table (IVT) 57
  Reset Sequence 57
  Setup and Service Procedures 80
  Trap Vectors 58
  Vector Table 57

M

Microchip Internet Web Site 218
MPLAB ASM30 Assembler, Linker, Librarian 174
MPLAB ICD 2 In-Circuit Debugger 175
MPLAB ICE 2000 High-Performance
  Universal In-Circuit Emulator 175
MPLAB Integrated Development
  Environment Software 173
MPLAB PM3 Device Programmer 175
MPLAB REAL ICE In-Circuit Emulator System 175
MPLINK Object Linker/MPLIB Object Librarian 174

N

Near Data Space 28

O

Oscillator Configuration
  Clock Switching 87
    Sequence 87
  Configuration Values for Clock Selection 82
  CPU Clocking Scheme 82
  Initial Configuration on POR 82
Output Compare
  Continuous Output Pulse Generation 111
  PWM Mode
    Period and Duty Cycle Calculations 113
  Single Output Pulse Generation 111

P

Packaging
  Details 207
  Marking 205
PICSTART Plus Development Programmer 176
Pinout Descriptions 11–13
Power-Saving Features 91
  Clock Frequency and Clock Switching 91
Product Identification System 220
Program and Data Memory
  Access Using Table Instructions 39
  Program Space Visibility 40
Program and Data Memory Spaces
  Interfacing 37
Program Memory
  Address Space 25
  Memory Map 25
Program Verification 171
Pulse-Width Modulation. *See* PWM.

R

Reader Response 219
Reference Clock Output 88
Register Maps
  A/D Converter (ADC) 34
  Clock Control 35
  CPU Core 29
  CTMU 34
  Deep Sleep 35
  Dual Comparator 35
  I^2C 32
  ICN 30
  Input Capture 31
  Interrupt Controller 30
  NVM 36
  Output Compare 31
  Pad Configuration 33

 © 2009 Microchip Technology Inc.

PMD 36
PORTA 33
PORTB 33
SPI 32
Timer 31
UART 32
Registers
AD1CHS (A/D Input Select) 148
AD1CON1 (A/D Control 1) 145
AD1CON2 (A/D Control 2) 146
AD1CON3 (A/D Control 3) 147
AD1CSSL (A/D Input Scan Select, Low) 149
AD1PCFG (A/D Port Configuration) 149
CLKDIV (Clock Divider) 85
CMSTAT (Comparator Status) 156
CMxCON (Comparator x Control) 155
CORCON (Core Control) 61
CORCON (CPU Control) 23
CTMUCON (CTMU Control) 161
CTMUICON (CTMU Current Control) 162
CVRCON (Comparator Voltage Reference Control) 158
DEVID (Device ID) 169
DEVREV (Device Revision) 169
DSCON (Deep Sleep Control) 95
DSWSRC (Deep Sleep Wake-up Source) 96
FDS (Deep Sleep Configuration) 168
FGS (General Segment Configuration) 163
FICD (In-Circuit Debugger Configuration) 167
FOSC (Oscillator Configuration) 165
FOSCSEL (Oscillator Selection Configuration) 164
FPOR (Reset Configuration) 167
FWDT (Watchdog Timer Configuration) 166
HLVDCON (High/Low-Voltage Detect Control) 142
I2C1CON (I2C1 Control) 128
I2C1MSK (I2C1 Slave Mode Address Mask) 132
I2C1STAT (I2C1 Status) 130
IC1CON (Input Capture 1 Control) 110
IEC0 (Interrupt Enable Control 0) 67
IEC1 (Interrupt Enable Control 1) 68
IEC4 (Interrupt Enable Control 4) 69
IFS0 (Interrupt Flag Status 0) 64
IFS1 (Interrupt Flag Status 1) 65
IFS4 (Interrupt Flag Status 4) 66
INTCON1 (Interrupt Control 1) 62
INTTREG (Interrupt Control and Status) 79
IPC0 (Interrupt Priority Control 0) 70
IPC1 (Interrupt Priority Control 1) 71
IPC16 (Interrupt Priority Control 16) 77
IPC18 (Interrupt Priority Control 18) 78
IPC19 (Interrupt Priority Control 19) 78
IPC2 (Interrupt Priority Control 2) 72
IPC3 (Interrupt Priority Control 3) 73
IPC4 (Interrupt Priority Control 4) 74
IPC5 (Interrupt Priority Control 5) 75
IPC7 (Interrupt Priority Control 7) 76
NVMCON (Flash Memory Control) 45
OC1CON (Output Compare 1 Control) 115
OSCCON (Oscillator Control) 83
OSCTUN (FRC Oscillator Tune) 86
PADCFG1 (Pad Configuration Control) 116, 132
RCON (Reset Control) 52
REFOCON (Reference Oscillator Control) 89
SPI1CON1 (SPI1 Control 1) 122
SPI1CON2 (SPI1 Control 2) 123
SPI1STAT (SPI1 Status and Control) 120
SR (ALU STATUS) 22, 60
T1CON (Timer1 Control) 102
T2CON (Timer2 Control) 106
T3CON (Timer3 Control) 107
U1MODE (UART1 Mode) 136
U1RXREG (UART1 Receive) 140
U1STA (UART1 Status and Control) 138
U1TXREG (UART1 Transmit) 140
Resets
Clock Source Selection 53
Delay Times 54
Device Times 54
RCON Flags Operation 53
SFR States 56
Revision History 213

S

Selective Peripheral Power Control 97
Serial Peripheral Interface. *See* SPI.
SFR Space 28
Software Simulator (MPLAB SIM) 174
Software Stack 37

T

Timer1 101
Timer2/3 103
Timing Diagrams
CLKO and I/O 200
External Clock 198
Timing Requirements
CLKO and I/O 200
External Clock 198
PLL Clock Specifications 199

U

UART 133
Baud Rate Generator (BRG) 134
Break and Sync Transmit Sequence 135
IrDA Support 135
Operation of $\overline{\text{U1CTS}}$ and $\overline{\text{U1RTS}}$ Control Pins 135
Receiving in 8-Bit or 9-Bit Data Mode 135
Transmitting in 8-Bit Data Mode 135
Transmitting in 9-Bit Data Mode 135

W

Watchdog Timer
Deep Sleep (DSWDT) 171
Watchdog Timer (WDT) 170
Windowed Operation 170
WWW Address 218
WWW, On-Line Support 5

NOTES:

 © 2009 Microchip Technology Inc.

THE MICROCHIP WEB SITE

Microchip provides online support via our WWW site at www.microchip.com. This web site is used as a means to make files and information easily available to customers. Accessible by using your favorite Internet browser, the web site contains the following information:

- **Product Support** – Data sheets and errata, application notes and sample programs, design resources, user's guides and hardware support documents, latest software releases and archived software
- **General Technical Support** – Frequently Asked Questions (FAQ), technical support requests, online discussion groups, Microchip consultant program member listing
- **Business of Microchip** – Product selector and ordering guides, latest Microchip press releases, listing of seminars and events, listings of Microchip sales offices, distributors and factory representatives

CUSTOMER CHANGE NOTIFICATION SERVICE

Microchip's customer notification service helps keep customers current on Microchip products. Subscribers will receive e-mail notification whenever there are changes, updates, revisions or errata related to a specified product family or development tool of interest.

To register, access the Microchip web site at www.microchip.com, click on Customer Change Notification and follow the registration instructions.

CUSTOMER SUPPORT

Users of Microchip products can receive assistance through several channels:

- Distributor or Representative
- Local Sales Office
- Field Application Engineer (FAE)
- Technical Support
- Development Systems Information Line

Customers should contact their distributor, representative or field application engineer (FAE) for support. Local sales offices are also available to help customers. A listing of sales offices and locations is included in the back of this document.

Technical support is available through the web site at: http://support.microchip.com

READER RESPONSE

It is our intention to provide you with the best documentation possible to ensure successful use of your Microchip product. If you wish to provide your comments on organization, clarity, subject matter, and ways in which our documentation can better serve you, please FAX your comments to the Technical Publications Manager at (480) 792-4150.

Please list the following information, and use this outline to provide us with your comments about this document.

To: Technical Publications Manager Total Pages Sent _____

RE: Reader Response

From: Name _____

Company _____

Address _____

City / State / ZIP / Country _____

Telephone: (_____) _____ - _____ FAX: (_____) _____ - _____

Application (optional):

Would you like a reply?____Y ____N

Device: PIC24F04KA201 Family Literature Number: DS39937B

Questions:

1. What are the best features of this document?

_____

_____

2. How does this document meet your hardware and software development needs?

_____

_____

3. Do you find the organization of this document easy to follow? If not, why?

_____

_____

4. What additions to the document do you think would enhance the structure and subject?

_____

_____

5. What deletions from the document could be made without affecting the overall usefulness?

_____

_____

6. Is there any incorrect or misleading information (what and where)?

_____

_____

7. How would you improve this document?

_____

_____

 © 2009 Microchip Technology Inc.

PRODUCT IDENTIFICATION SYSTEM

To order or obtain information, e.g., on pricing or delivery, refer to the factory or the listed sales office.

PIC 24 F 04 KA2 01 T - I / SS - XXX

- **Microchip Trademark**
- **Architecture**
- **Flash Memory Family**
- **Program Memory Size (KB)**
- **Product Group**
- **Pin Count**
- **Tape and Reel Flag (if applicable)**
- **Temperature Range**
- **Package**
- **Pattern**

Architecture	24	= 16-bit modified Harvard without DSP
Flash Memory Family	F	= Flash program memory
Product Group	KA2	= General purpose microcontrollers
Pin Count	00	= 14-pin
	01	= 20-pin
Temperature Range	I	= -40°C to +85°C (Industrial)
Package	P	= PDIP
	SL	= SOIC, Narrow
	SO	= SOIC
	SS	= SSOP
	MQ	= QFN
	ST	= TSSOP
Pattern	Three-digit QTP, SQTP, Code or Special Requirements (blank otherwise)	
	ES	= Engineering Sample

Examples:

a) PIC24F04KA201-I/MQ: General purpose, 16-Kbyte program memory, 20-pin, Industrial temp., QFN package.

WORLDWIDE SALES AND SERVICE

AMERICAS

Corporate Office
2355 West Chandler Blvd.
Chandler, AZ 85224-6199
Tel: 480-792-7200
Fax: 480-792-7277
Technical Support:
http://support.microchip.com
Web Address:
www.microchip.com

Atlanta
Duluth, GA
Tel: 678-957-9614
Fax: 678-957-1455

Boston
Westborough, MA
Tel: 774-760-0087
Fax: 774-760-0088

Chicago
Itasca, IL
Tel: 630-285-0071
Fax: 630-285-0075

Cleveland
Independence, OH
Tel: 216-447-0464
Fax: 216-447-0643

Dallas
Addison, TX
Tel: 972-818-7423
Fax: 972-818-2924

Detroit
Farmington Hills, MI
Tel: 248-538-2250
Fax: 248-538-2260

Kokomo
Kokomo, IN
Tel: 765-864-8360
Fax: 765-864-8387

Los Angeles
Mission Viejo, CA
Tel: 949-462-9523
Fax: 949-462-9608

Santa Clara
Santa Clara, CA
Tel: 408-961-6444
Fax: 408-961-6445

Toronto
Mississauga, Ontario,
Canada
Tel: 905-673-0699
Fax: 905-673-6509

ASIA/PACIFIC

Asia Pacific Office
Suites 3707-14, 37th Floor
Tower 6, The Gateway
Harbour City, Kowloon
Hong Kong
Tel: 852-2401-1200
Fax: 852-2401-3431

Australia - Sydney
Tel: 61-2-9868-6733
Fax: 61-2-9868-6755

China - Beijing
Tel: 86-10-8528-2100
Fax: 86-10-8528-2104

China - Chengdu
Tel: 86-28-8665-5511
Fax: 86-28-8665-7889

China - Hong Kong SAR
Tel: 852-2401-1200
Fax: 852-2401-3431

China - Nanjing
Tel: 86-25-8473-2460
Fax: 86-25-8473-2470

China - Qingdao
Tel: 86-532-8502-7355
Fax: 86-532-8502-7205

China - Shanghai
Tel: 86-21-5407-5533
Fax: 86-21-5407-5066

China - Shenyang
Tel: 86-24-2334-2829
Fax: 86-24-2334-2393

China - Shenzhen
Tel: 86-755-8203-2660
Fax: 86-755-8203-1760

China - Wuhan
Tel: 86-27-5980-5300
Fax: 86-27-5980-5118

China - Xiamen
Tel: 86-592-2388138
Fax: 86-592-2388130

China - Xian
Tel: 86-29-8833-7252
Fax: 86-29-8833-7256

China - Zhuhai
Tel: 86-756-3210040
Fax: 86-756-3210049

ASIA/PACIFIC

India - Bangalore
Tel: 91-80-3090-4444
Fax: 91-80-3090-4080

India - New Delhi
Tel: 91-11-4160-8631
Fax: 91-11-4160-8632

India - Pune
Tel: 91-20-2566-1512
Fax: 91-20-2566-1513

Japan - Yokohama
Tel: 81-45-471- 6166
Fax: 81-45-471-6122

Korea - Daegu
Tel: 82-53-744-4301
Fax: 82-53-744-4302

Korea - Seoul
Tel: 82-2-554-7200
Fax: 82-2-558-5932 or
82-2-558-5934

Malaysia - Kuala Lumpur
Tel: 60-3-6201-9857
Fax: 60-3-6201-9859

Malaysia - Penang
Tel: 60-4-227-8870
Fax: 60-4-227-4068

Philippines - Manila
Tel: 63-2-634-9065
Fax: 63-2-634-9069

Singapore
Tel: 65-6334-8870
Fax: 65-6334-8850

Taiwan - Hsin Chu
Tel: 886-3-6578-300
Fax: 886-3-6578-370

Taiwan - Kaohsiung
Tel: 886-7-536-4818
Fax: 886-7-536-4803

Taiwan - Taipei
Tel: 886-2-2500-6610
Fax: 886-2-2508-0102

Thailand - Bangkok
Tel: 66-2-694-1351
Fax: 66-2-694-1350

EUROPE

Austria - Wels
Tel: 43-7242-2244-39
Fax: 43-7242-2244-393

Denmark - Copenhagen
Tel: 45-4450-2828
Fax: 45-4485-2829

France - Paris
Tel: 33-1-69-53-63-20
Fax: 33-1-69-30-90-79

Germany - Munich
Tel: 49-89-627-144-0
Fax: 49-89-627-144-44

Italy - Milan
Tel: 39-0331-742611
Fax: 39-0331-466781

Netherlands - Drunen
Tel: 31-416-690399
Fax: 31-416-690340

Spain - Madrid
Tel: 34-91-708-08-90
Fax: 34-91-708-08-91

UK - Wokingham
Tel: 44-118-921-5869
Fax: 44-118-921-5820

03/26/09

© 2009 Microchip Technology Inc.