high performance needs great design.

Datasheet: EasyPoint™ N50P105
Single Module (without IC, with push button)

Please be patient while we update our brand image as austriamicrosystems and TAOS are now ams.

EasyPoint™ N50P105

Single Module (without IC, with push button)

1 General Description

EasyPoint™ N50P105 is a miniature joystick module concept based on contact-less, magnetic movement detection. The two-dimensional linear encoder IC AS5011 / AS5013 is mounted on the bottom side of the application's PCB, and monitors the movement of the magnet incorporated into the knob and provides directly the x and y coordinates via I²C output. An integrated mechanical push button built in the module provides a "select" function.

Figure 1. N50P105-xxxxx-H

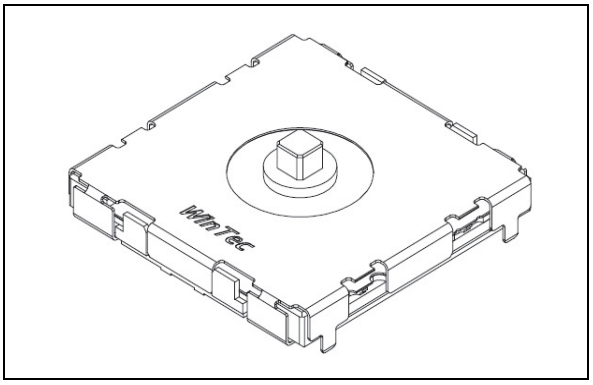

2 Key Features

- Small form factor
- Lateral magnet movement radius up to ±2mm
- Direct knob force feedback
- Push button output
- SMD mounting

3 Applications

The EasyPoint™ N50P105 in combination with the AS5011 / AS5013 is ideal for small form factor navigation user interfaces in battery driven portable devices, such as - Mobile phones (especially for gaming), Remote Controls, Gaming Consoles, Analog joysticks(360 degree), MP3 players, PDAs, PND, MID and GPS

4 Benefits

- High reliability due to magnetic contact-less sensing
- Easy to use and fast integration

Figure 2. Typical Application Diagram

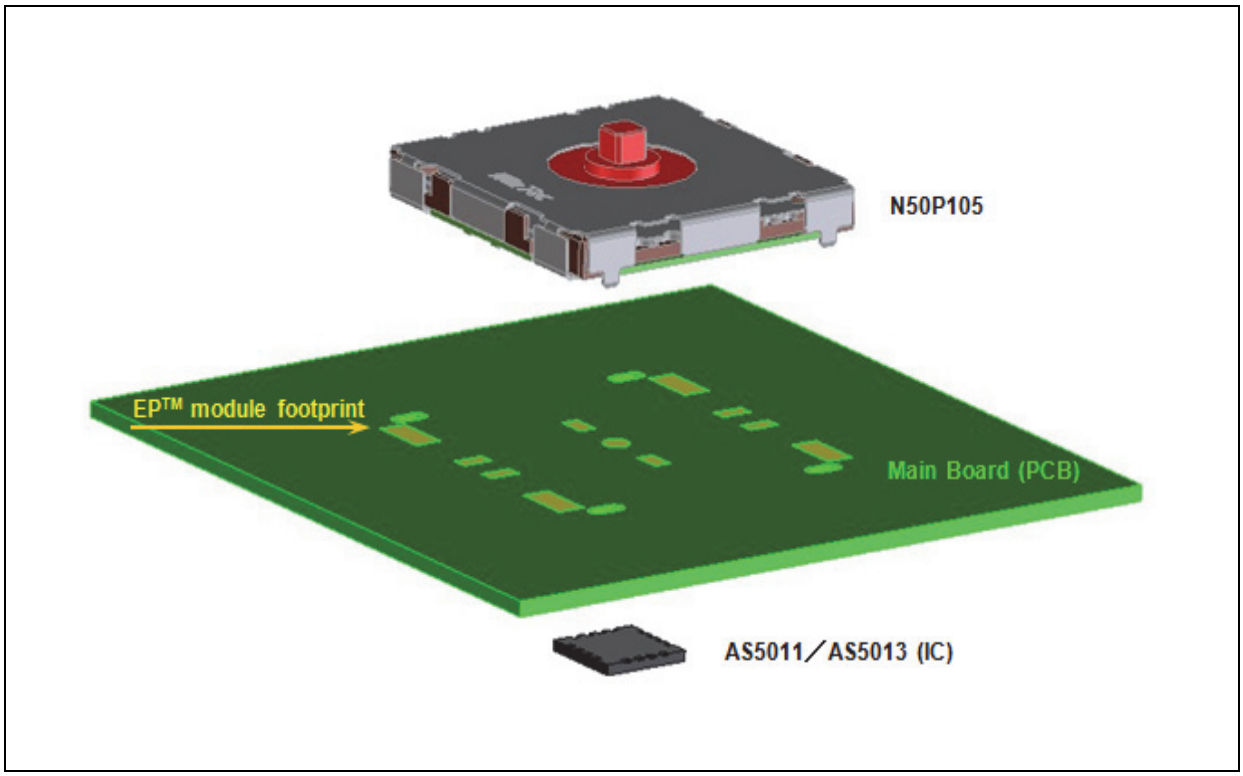

5 Electrical Characteristics

5.1 Mechanical Specifications

Table 1. Mechanical Specifications

Parameter	Note
Number of operating shafts	Single shaft
Shaft material	LPC
Housing material	LPC & PA46
Shell material	Stainless Steel or Copper alloy
Travel (XY operation)	±2.0mm (±10%)
Travel (Z push operation)	0.22mm (±0.05mm)
Directional operating force (XY direction)	0.70N (±0.15N)
Push operating force (Z direction)	1.80N (±15%)
Vibration	10-500-10Hz 15 minutes, 12 cycles, 3 axes (total 36 cycles)
Operating life – XY direction	Each direction > 1 million cycles
Operating life – Push Z direction	> 1 million cycles
Shaft strength (XYZ direction)	> 3.5kgf
Over force	1.5kgf > 100k cycles

5.2 Electrical Specifications

Table 2. Electrical Specifications

Parameter	Min	Max	Unit	Note
Contact resistance		750	mΩ	Norm: EIA-364-23
Dielectric withstanding voltage	100		Vac	Norm: EIA-364-20
Insulation resistance	100		MΩ	Norm: EIA-364-21, 100Vdc
Bouncing (On/Off)		5	ms	Rate: 2 times/sec.

5.3 Environmental Specifications

Table 3. Environmental Specifications

Parameter	Note
Operating temperature range	-20 ~ +70ºC
Storage temperature range	-40 ~ +85ºC
Humidity non-condensing	5 ~ 85% RH
Degrees of protection	IP 5X

5.4 Recommended Reflow Temperature Profile

Figure 3. Reflow Temperature Profile

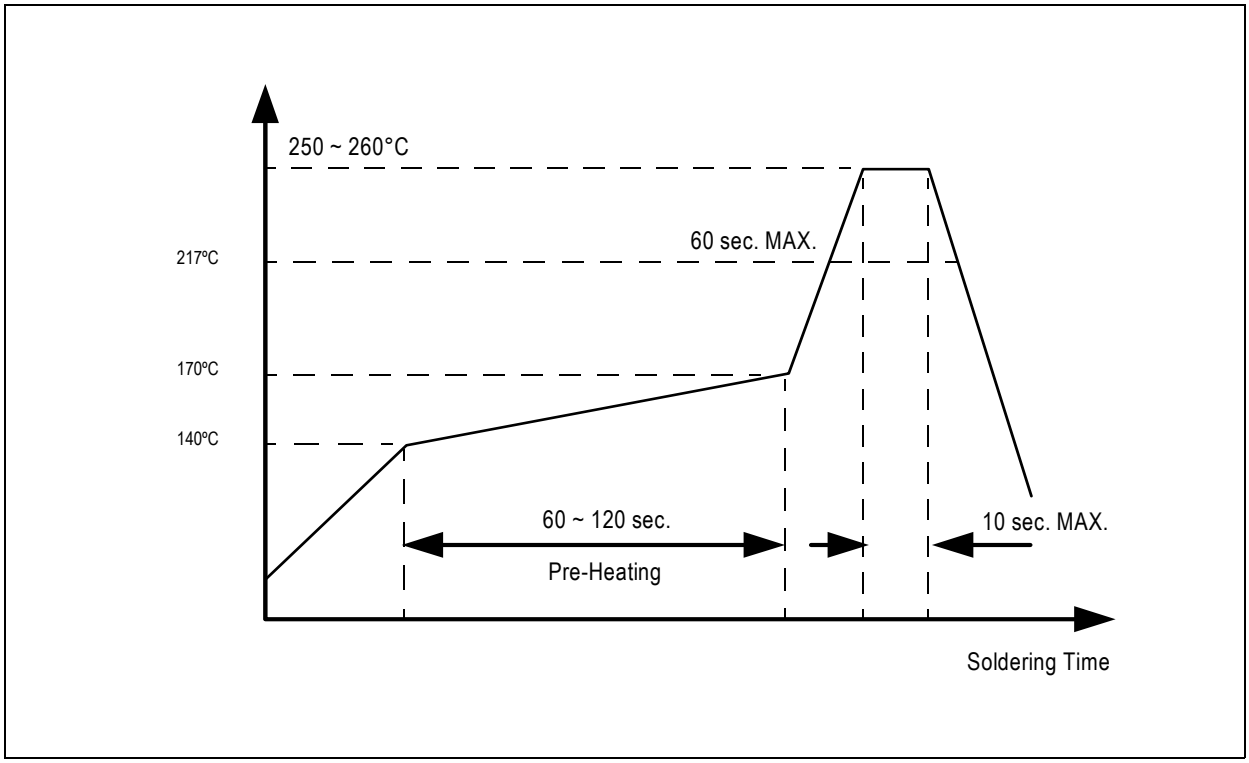

Notes:

1. Do not wash the module! Do not use flux cleaner or solder paste remover!
2. Maximum 3 passes through reflow oven.

6 Application Using AS5011/AS5013 2D Linear Encoder

Figure 4. Application Diagram

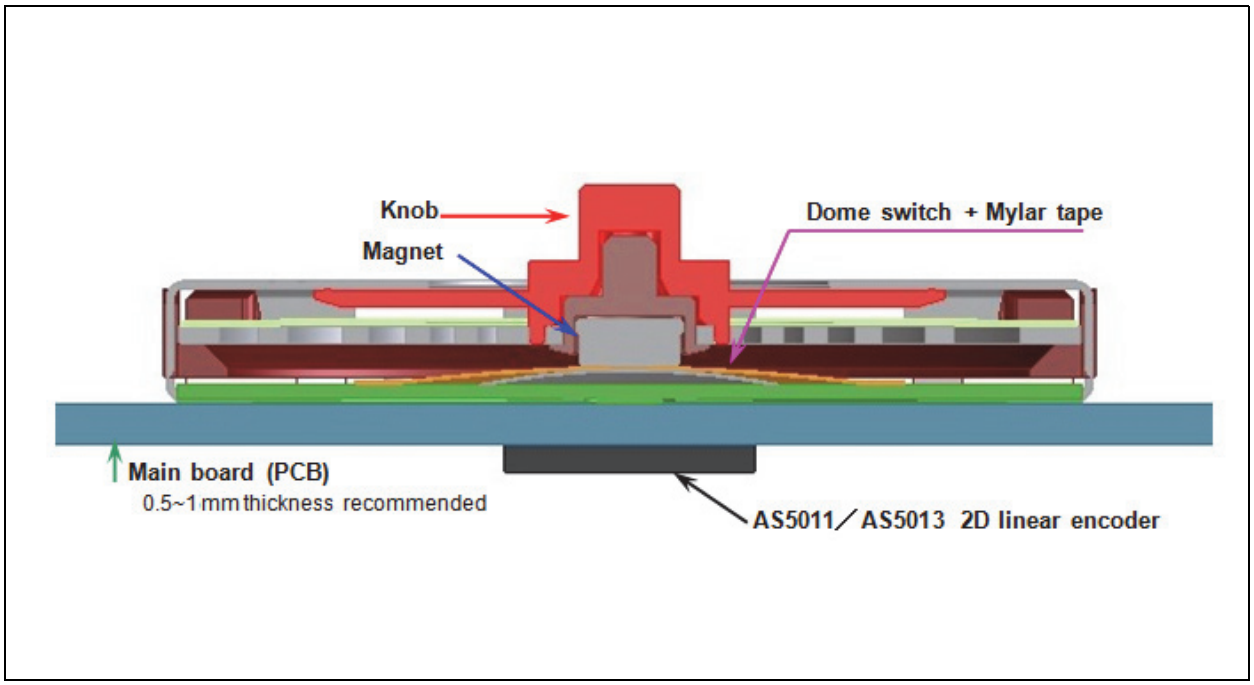

For further information, please refer to the *ams* AS5013 encoder application note AN5013-20:

http://www.ams.com/eng/Products/Magnetic-Position-Sensors/EasyPoint-Joystick-Position-Sensor/AS5013/EasyPoint-AS5013-Downloads/EasyPoint-AS5013-Downloads

7 Package Drawings and Markings

Figure 5. N50P105 Dimensions (mm ±0.15)

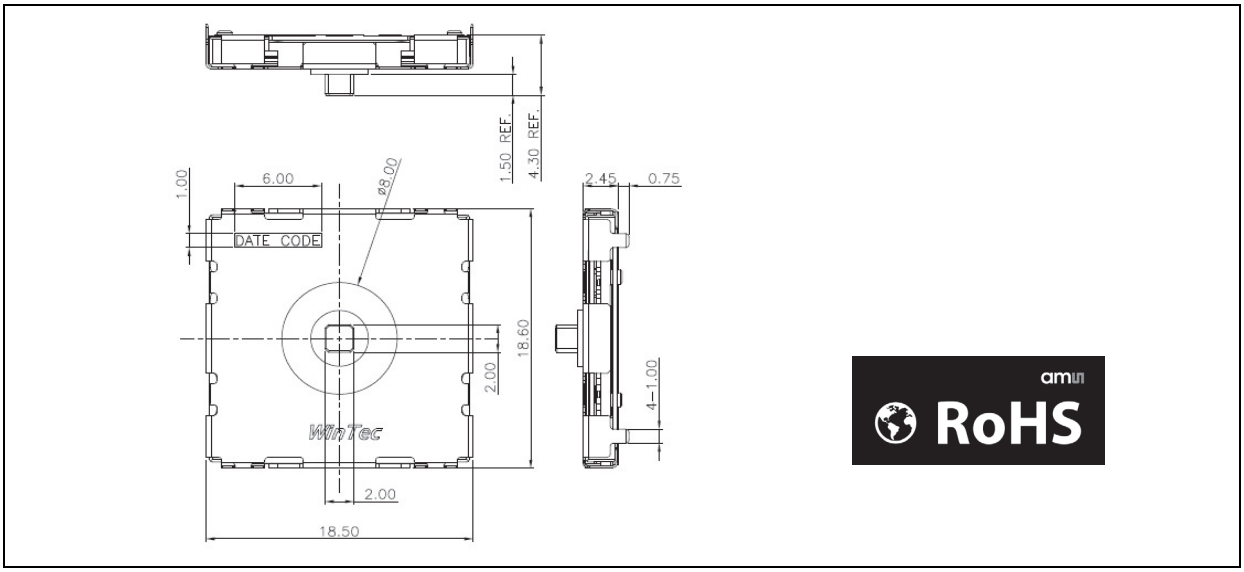

Figure 6. Recommended PCB Layout (mm ±0.05) & Circuit Diagram

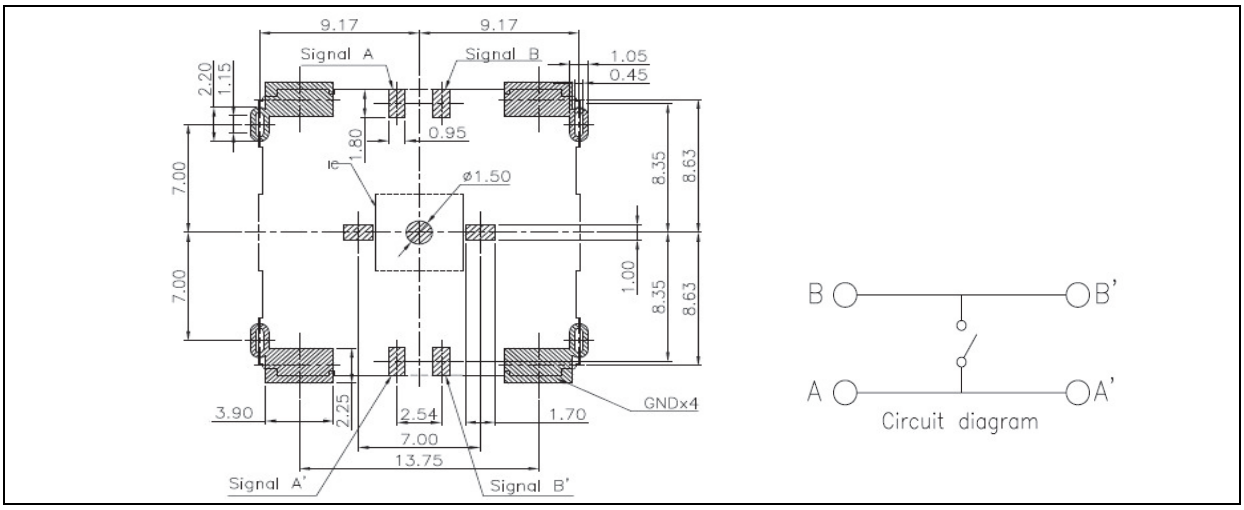

Figure 7. Recommended on Casing Design

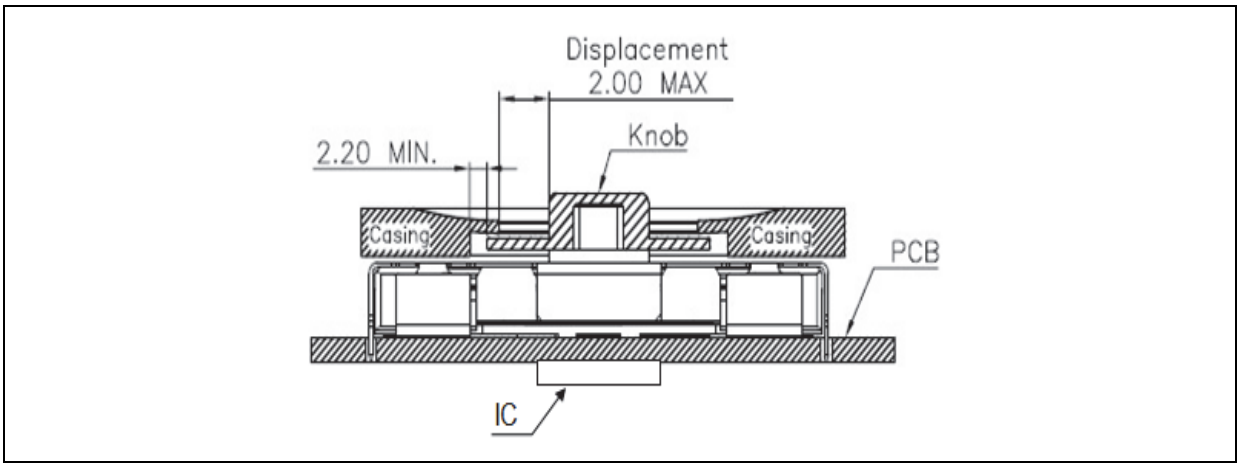

Figure 8. Recommended Stencil Design for 4 GND-Pads

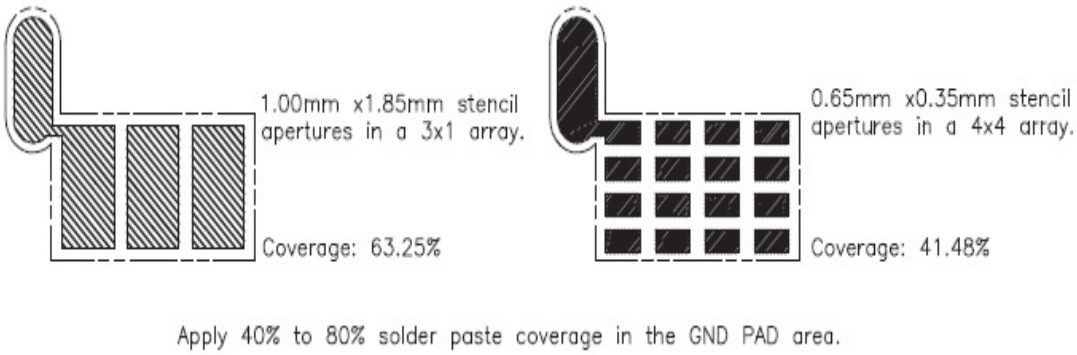

Apply 40% to 80% solder paste coverage in the GND PAD area.

Revision History

Revision	Date	Owner	Description
1.0	25 May, 2011	abi	Initial release
1.1	21 Jun, 2011		Minor changes on text and format
1.2	19 Oct, 2011	rph	Added logos to Package Drawings and Markings on page 5
1.3	06 Jan, 2012		Changed logos in Package Drawings and Markings on page 5
1.4	17 Jan, 2012		Added note to Recommended Reflow Temperature Profile on page 3
1.5	19 Jun 2012		Updated Key Features on page 1 and Figure 4

Note: Typos may not be explicitly mentioned under revision history.

Copyrights

Disclaimer

Devices sold by ams AG are covered by the warranty and patent indemnification provisions appearing in its Term of Sale. ams AG makes no warranty, express, statutory, implied, or by description regarding the information set forth herein or regarding the freedom of the described devices from patent infringement. ams AG reserves the right to change specifications and prices at any time and without notice. Therefore, prior to designing this product into a system, it is necessary to check with ams AG for current information. This product is intended for use in normal commercial applications. Applications requiring extended temperature range, unusual environmental requirements, or high reliability applications, such as military, medical life-support or life-sustaining equipment are specifically not recommended without additional processing by ams AG for each application. For shipments of less than 100 parts the manufacturing flow might show deviations from the standard production flow, such as test flow or test location.

The information furnished here by ams AG is believed to be correct and accurate. However, ams AG shall not be liable to recipient or any third party for any damages, including but not limited to personal injury, property damage, loss of profits, loss of use, interruption of business or indirect, special, incidental or consequential damages, of any kind, in connection with or arising out of the furnishing, performance or use of the technical data herein. No obligation or liability to recipient or any third party shall arise or flow out of ams AG rendering of technical or other services.

Contact Information

Headquarters

ams AG
Tobelbaderstrasse 30
A-8141 Unterpremstaetten, Austria

Tel : +43 (0) 3136 500 0
Fax : +43 (0) 3136 525 01

For Sales Offices, Distributors and Representatives, please visit:

http://www.ams.com/contact