AS5013

Low Power Integrated Hall IC for Human Interface Applications

1 General Description

The AS5013 is a complete Hall Sensor IC for smart navigation key applications to meet the low power requirements and host SW integration challenges for products such as cell phones and smart handheld devices.

Due to the on chip processing engine, system designers are not tasked with integrating complex SW algorithms on their host processor thus leading to rapid development cycles.

The AS5013 single-chip IC includes 5 integrated Hall sensing elements for detecting up to ±2mm lateral displacement, high resolution ADC, XY coordinate and motion detection engine combined with a smart power management controller.

The X and Y positions coordinates and magnetic field information for each Hall sensor element is transmitted over a 2-wire I²C compliant interface to the host processor.

The AS5013 is available in a small 16-pin 4x4x0.55mm QFN package and specified over an operating temperature of -20°C to +80°C.

2 Key Features

- 2.7V to 3.6V operating voltage
- Down to 1.7V peripheral supply voltage
- Two operating modes:
  - Idle mode
  - Low power mode
- Less than 3µA current consumption in Idle mode
- Low power mode with selectable readout rate
- Two interrupt modes
  - Motion detect
  - Data ready
- Lateral magnet movement radius up to 2mm
- High-speed I²C interface

3 Applications

The AS5013 is ideal for small form-factor manual input devices in battery operated equipment, such as Mobile phones, MP3 players, PDAs, GPS receivers and Gaming consoles.

Figure 1. AS5013 Block Diagram

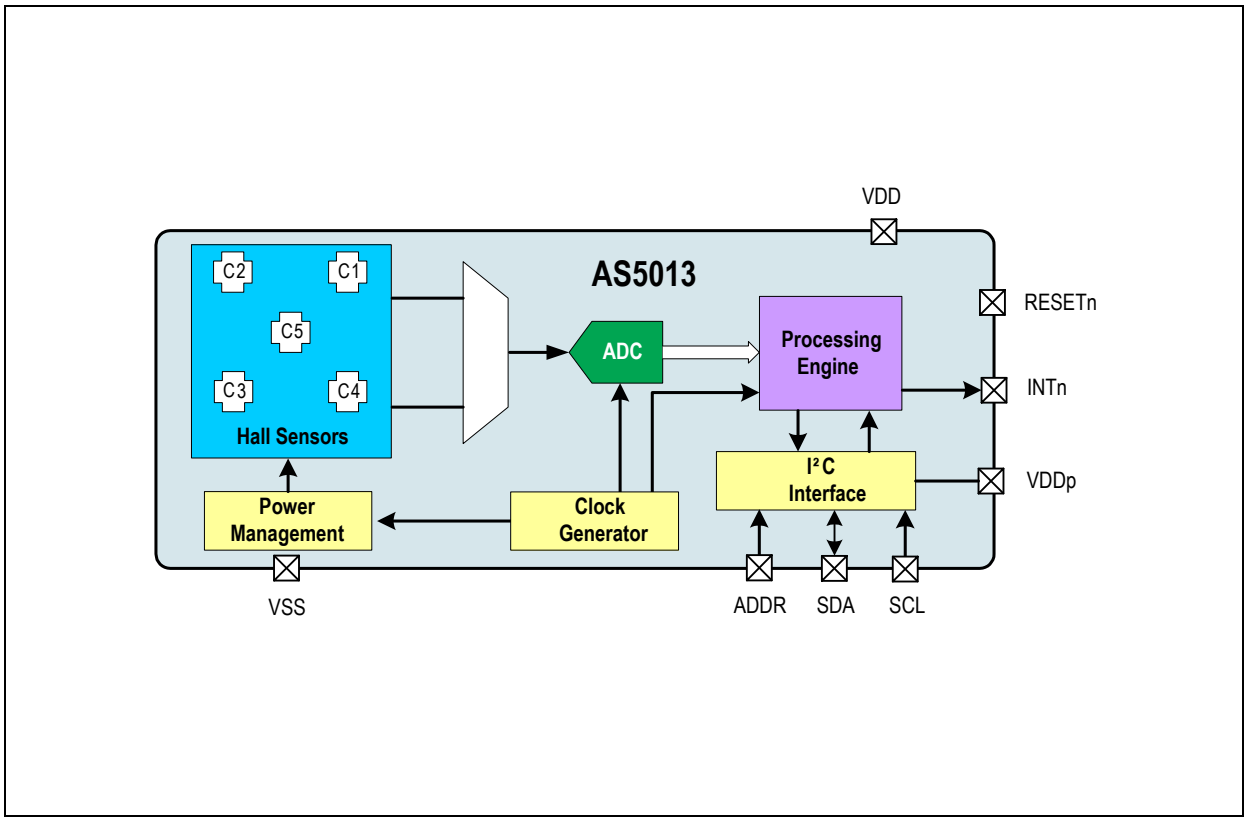

Contents

1 General Description 1
2 Key Features 1
3 Applications 1
4 Pin Assignments 3
4.1 Pin Descriptions 3
5 Absolute Maximum Ratings 4
6 Electrical Characteristics 5
6.1 Operating Conditions 5
6.2 Digital IO pads DC/AC Characteristics 6
7 Detailed Description 7
7.1 Operating the AS5013 7
7.2 XY Coordinates Interpretation 8
7.3 Transfer Function 8
7.4 Power Modes 9
7.5 I²C Interface 10
7.5.1 Interface Operation 10
7.5.2 I²C Electrical Specification 11
7.5.3 I²C Timing 11
7.5.4 I²C Modes 12
7.5.5 SDA, SCL Input Filters 16
8 I²C Registers 17
8.1 Control Register 1 (0Fh) 17
8.2 X Register (10h) 19
8.3 Y_res_int Register (11h) 19
8.4 Xp Register (12h) 19
8.5 Xn Register (13h) 19
8.6 Yp Register (14h) 20
8.7 Yn Register (15h) 20
8.8 M_ctrl Register (2Bh) 20
8.9 J_ctrl Register (2Ch) 20
8.10 T_ctrl Register (2Dh) 21
8.11 Control Register 2 (2Eh) 22
8.12 Hall Element Direct Read Registers (16h to 29h) 22
8.13 Hall Element Direct Read Registers (2Ah) 23
8.14 Power ON 23
8.15 Registers Initialization 24
8.16 Registers Table 24
9 Package Drawings and Markings 27
9.1 Recommended Footprint 28
9.2 Recommended Mounting 28
10 Ordering Information 31

4 Pin Assignments

Figure 2. Pin Assignments (Top View)

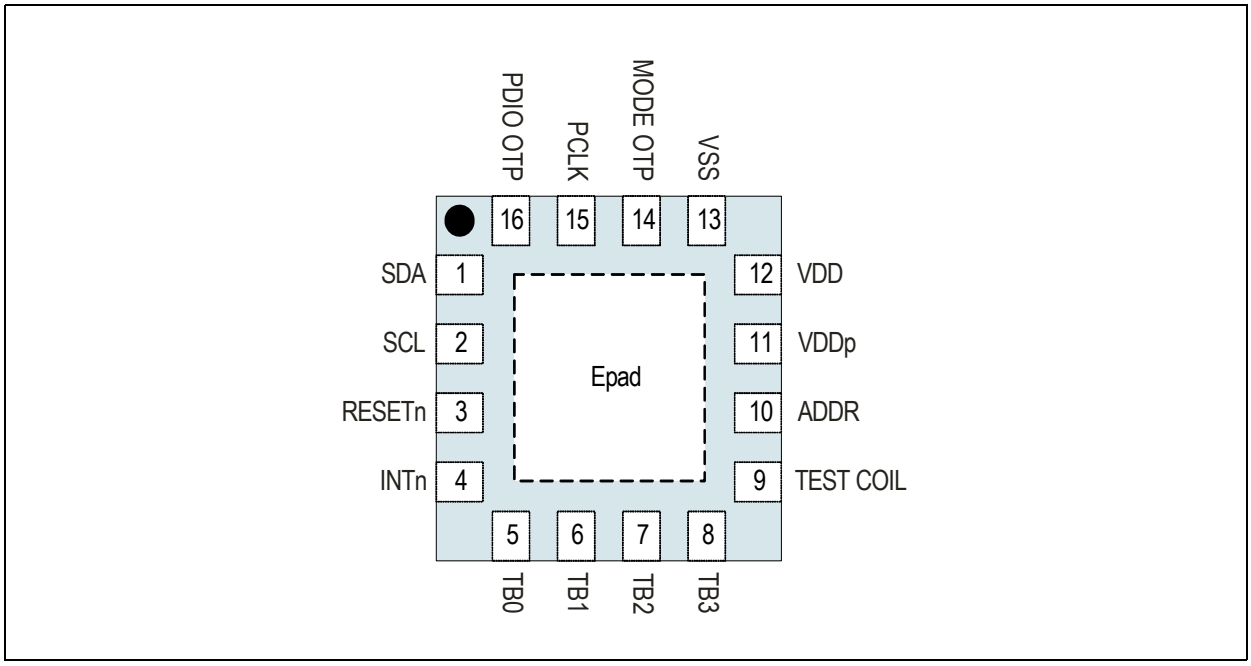

4.1 Pin Descriptions

Table 1. Pin Descriptions

Pin Number	Pin Name	Pin Type	ESD	Description
1	SDA	Digital I/O / Open drain	2kV	I²C Data line, open drain
2	SCL	Digital input	2kV	I²C Clock line
3	RESETn		2kV	General Reset input **0:** Reset **1:** Normal mode
4	INTn	Digital output open drain	2kV	Interrupt line, open drain, active low
5	TB0	Analog I/O	2kV	Test pin, leave unconnected
6	TB1		2kV	
7	TB2		2kV	
8	TB3		2kV	
9	TEST COIL	Special	2kV	Test pin, leave unconnected or connect to VSS
10	ADDR	Digital input with Schmitt trigger functionality	2kV	I²C address selection input. Read in at each reset
11	VDDp	Supply pad	2kV	1.7 ~ 3.6V IO power supply
12	VDD		2kV	2.7 ~ 3.6V Core power supply
13	VSS		2kV	Power supply ground
14	MODE OTP	Digital I/O	2kV	Test pin, leave unconnected
15	PCLK		2kV	
16	PDIO OTP		2kV	
EPAD	Exposure Pad	-	-	Internally not connected. Leave open or connect to VSS

5 Absolute Maximum Ratings

Stresses beyond those listed in Table 2 may cause permanent damage to the device. These are stress ratings only, and functional operation of the device at these or any other conditions beyond those indicated in Operating Conditions on page 5 is not implied. Exposure to absolute maximum rating conditions for extended periods may affect device reliability.

Table 2. Absolute Maximum Ratings

Symbol	Parameter	Min	Max	Units	Comments
Electrical Parameters					
VDD	DC supply voltage	-0.3	5	V	
VDDp	Peripheral supply voltage	-0.3	5 VDD +0.3	V	
Vin	Input pin voltage	-0.3	VDDp +0.3	V	
		-	3.6	V	
I_{scr}	Input current (latchup immunity)	-100	100	mA	Norm: JEDEC 78
Electrostatic Discharge					
ESD	Electrostatic discharge	-	±2	kV	Norm: MIL 883 E method 3015, direct pad contact
Θ_{JA}	Package thermal resistance	-	32	K/W	Velocity=0, Multi Layer PCB; JEDEC Standard Testboard
Temperature Ranges and Storage Conditions					
T_{strg}	Storage temperature	-55	125	°C	
T_{body}	Package body temperature		260	°C	The reflow peak soldering temperature (body temperature) specified is in accordance with *IPC/JEDEC J-STD-020 "Moisture/Reflow Sensitivity Classification for Non-Hermetic Solid State Surface Mount Devices".* The lead finish for Pb-free leaded packages is matte tin (100% Sn).
	Humidity non-condensing	5	85	%	

6 Electrical Characteristics

6.1 Operating Conditions

TAMB = -20°C to +80°C, VDD = 3.3V, RESETn = HIGH

Table 3. Operating Conditions

Symbol	Parameter	Conditions	Min	Typ	Max	Units
VDD	Core supply voltage		2.7		3.6	V
VDDp	Peripheral supply voltage	Input: RESETn Open drain outputs: SCL, SDA, INTn. External I2C pull up resistor to be connected to VDDp.	1.7		VDD	V
IDD_s	Maximal average current consumption on VDD, Pulsed peaks = IDD_f depends on the sampling time ts[ms]	TAMB = -20ºC to +50ºC	3+3760/ts [ms]			µA
		TAMB = 50ºC to +80ºC	10+3760/ts [ms]			
IDD_I	Current consumption on core supply, Idle mode, no readout (ts = infinite)	TAMB = -20ºC to +50ºC			3	µA
		TAMB = 50ºC to +80ºC			10	
IDD_f	Current consumption on core supply, Idle mode, continuous readout (ts=450µs)	Continuous current pin VDD Maximum sampling ts = 450µs			10	mA
Tpua	Power up time analog	Step on VDD to Data_Ready			1000	µs
Tconv	Conversion time	Read X/Y coordinate I²C Y_res_int ACK bit of to Data_Ready			450	µs
$t_{P,W}$	Nominal wakeup time		20		320	ms
dx dy	Lateral movement radius	The range depends on the magnet and the distance to the surface, $dx^2+dy^2 <= 4mm$			2	mm
d	Type of magnet	Cylindrical; axial magnetized	2		3	mm
RH	Hall array diameter			2.2		mm
B_Z	Magnetic field strength	Vertical magnetic field at magnet center; measured at chip surface	30		120	mT
TAMB	Ambient temperature range		-20		+80	°C
	Resolution of XY displacement	Over 2*dx and 2*dy axis		8		bit
	Noise (RMS)	C1..C5 channel data (result from two measurement – positive and negative current spinning)			100	µT
PSSR	Power Supply Rejection Ratio	VDD=3.3V; Temp = 25°C dVDD= 100 mVpp at 10.30 kHz			0.2	%/ 100mV
	IC package		QFN16 4x4x0.55mm			
	Power supply filtering capacitors	Ceramic capacitor VDD - VSS	100			nF
		Ceramic capacitor VDDp - VSS	100			nF

6.2 Digital IO pads DC/AC Characteristics

Table 4. DC/AC Characteristics

Symbol	Parameter	Conditions	Min	Max	Units
Inputs: SCL, SDA					
V_{IH}	High level input voltage	IIC	0.7 * VDDp		V
V_{IL}	Low level input voltage	IIC		0.3 * VDDp	V
I_{LEAK}	Input leakage current	VDDp = 3.6V		1	µA
Inputs: ADDR, RESETn (JEDEC76)					
V_{IH}	High level input voltage	JEDEC	0.65 * VDDp		V
V_{IL}	Low level input voltage	JEDEC		0.35 * VDDp	V
I_{LEAK}	Input leakage current	VDDp = 3.6V		1	µA
Outputs: SDA					
V_{OH}	High level output voltage	High level output voltage	Open drain		Leakage current 1 µA
V_{OL1}	Low level output voltage	-6mA; VDDP > 2V; fast mode		VSS + 0.4	V
V_{OL3}		-6mA; VDDP ≤ 2V; fast mode		VDDP*0.2	V
V_{OL1}		-3mA; VDDP > 2V; high speed		VSS + 0.4	V
V_{OL3}		-3mA; VDDP ≤ 2V; high speed		VDDP*0.2	V
C_L	Capacitive load	standard mode (100 kHz)		400	pF
		fast mode (400 kHz)		400	pF
		high speed mode (3.4 MHz)		100	pF
Outputs: INTn (JEDEC76)					
V_{OH}	High level output voltage	High level output voltage	Open drain		Leakage current 1µA
V_{OL}	Low level output voltage	-100µA		VSS + 0.2	V
V_{OL}		-2mA		VSS + 0.45	V
C_L	Capacitive load	standard mode (100 kHz)		30	pF

7 Detailed Description

The benefits of the AS5013 device are as follows:

- Complete system-on-chip
- High reliability due to non-contact sensing
- Low power consumption

Figure 3. Typical Arrangement of AS5013 and Axial Magnet

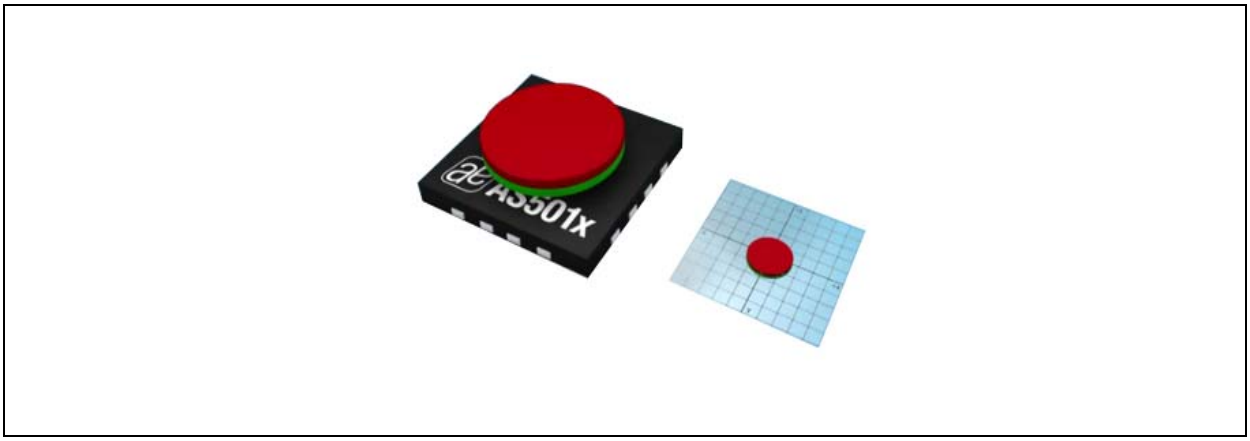

7.1 Operating the AS5013

Typical Application.

The AS5013 requires only a few external components in order to operate immediately when connected to the host microcontroller.

Only 4 wires are needed for a simple application using a single power supply: two wires for power and two wires for the I²C communication. A fifth connection can be added in order to send an interrupt to the host CPU when the magnet is moving away from the center and to inform that a new valid coordinate can be read.

Figure 4. Electrical Connection of AS5013 with Microcontroller

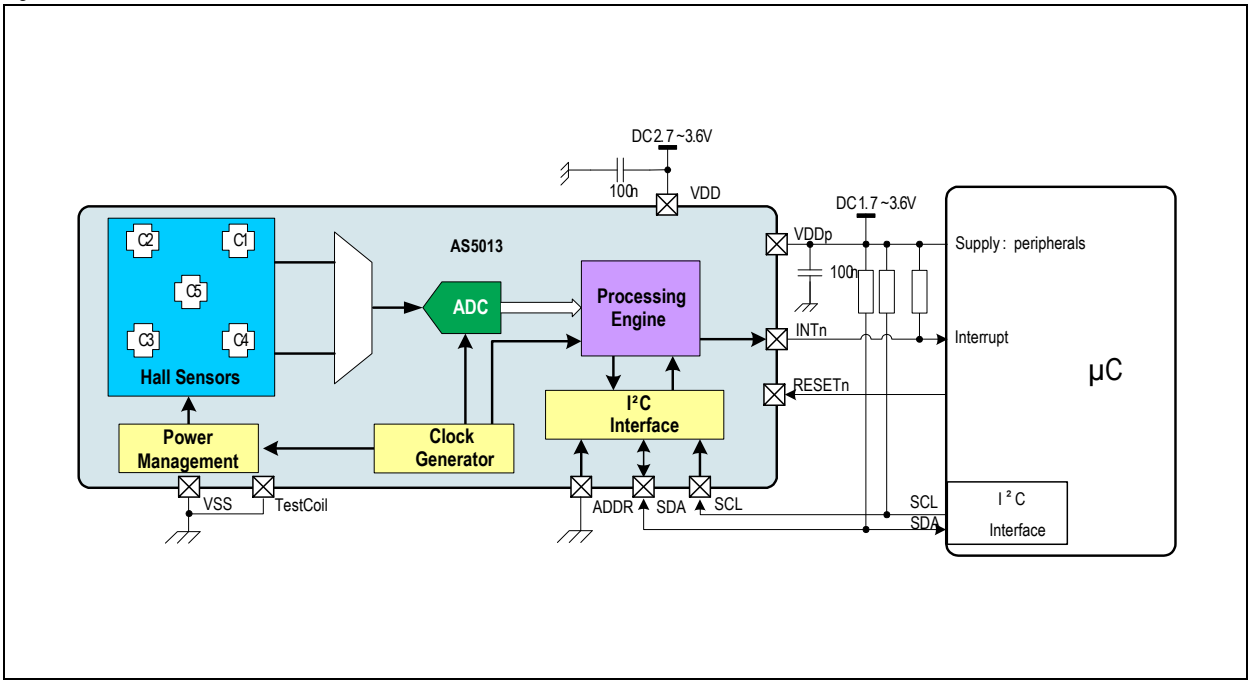

7.2 XY Coordinates Interpretation

The movement of the magnet over the Hall elements causes response which is geometrically distributed like a bell-shaped curve.

The maximum magnet travel is a circle of 2mm radius around the center of the AS5013. The hall elements C1..C4 are placed on a circle centered on the middle of the package. The hall element C5, placed exactly in the middle is used for better linearity response with magnet displacement larger than ±1.0mm.

Figure 5. Hall Element Placement and Magnetic Field when the Magnet is Centered over each Hall Element

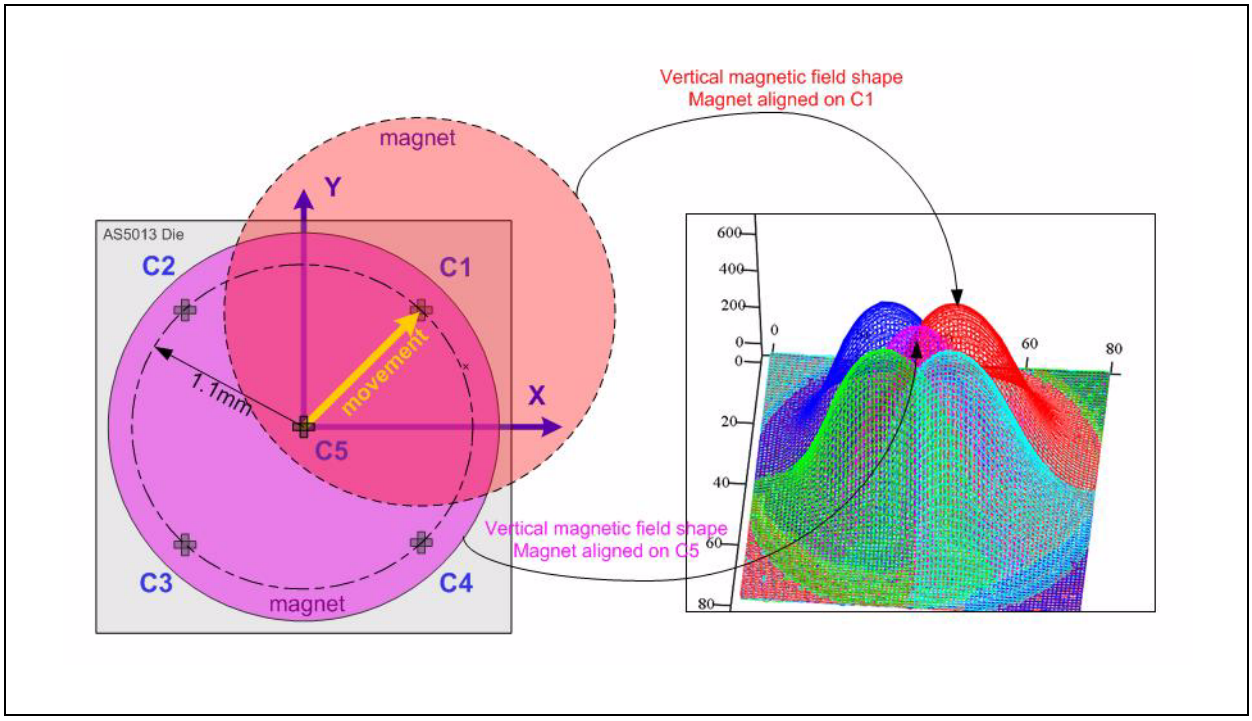

7.3 Transfer Function

AS5013 has the possibility to adjust the transfer function for the used magnet and a specific range to optimize the linearity and resolution. The value will be provided from *ams AG* and has to be written in the algorithm related registers M_ctrl [0x2B], J_ctrl [0x2C], T_ctrl [0x2D] during the initialization phase.

Please contact *ams* for parameter settings.

Below is the optimal setup for a range of ±0.6 mm to obtain the best dynamic range from XY registers -128~+127 with one given magnet airgap, with d2x0.8mm axial magnet.

Figure 6. Example of Transfer Function Y_displacement vs. Y_register, Optimized for 0.6mm Travel Radius

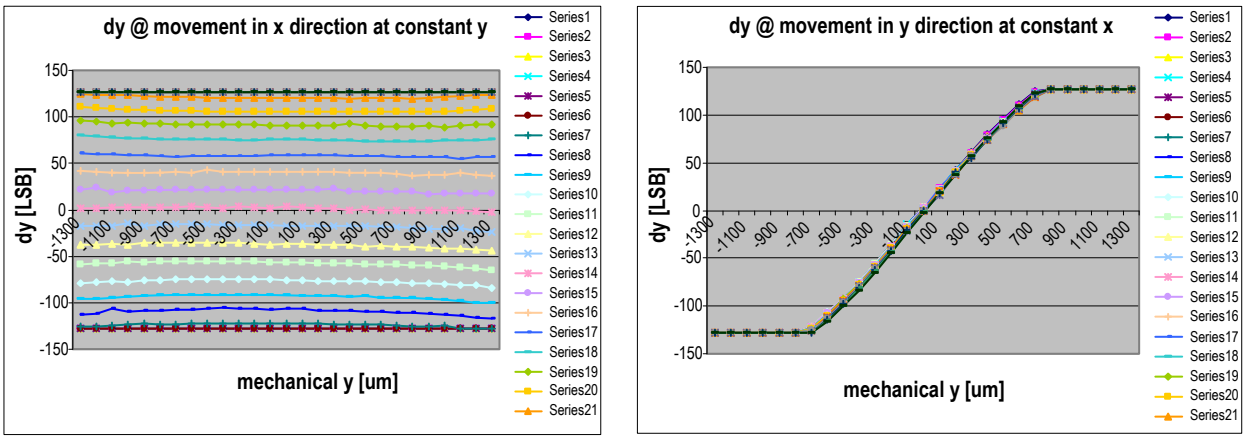

7.4 Power Modes

The AS5013 can operate in two different power modes, depending on the power consumption requirements of the whole system.

Figure 7. Readout Cycle Depending on Power Mode (idle bit)

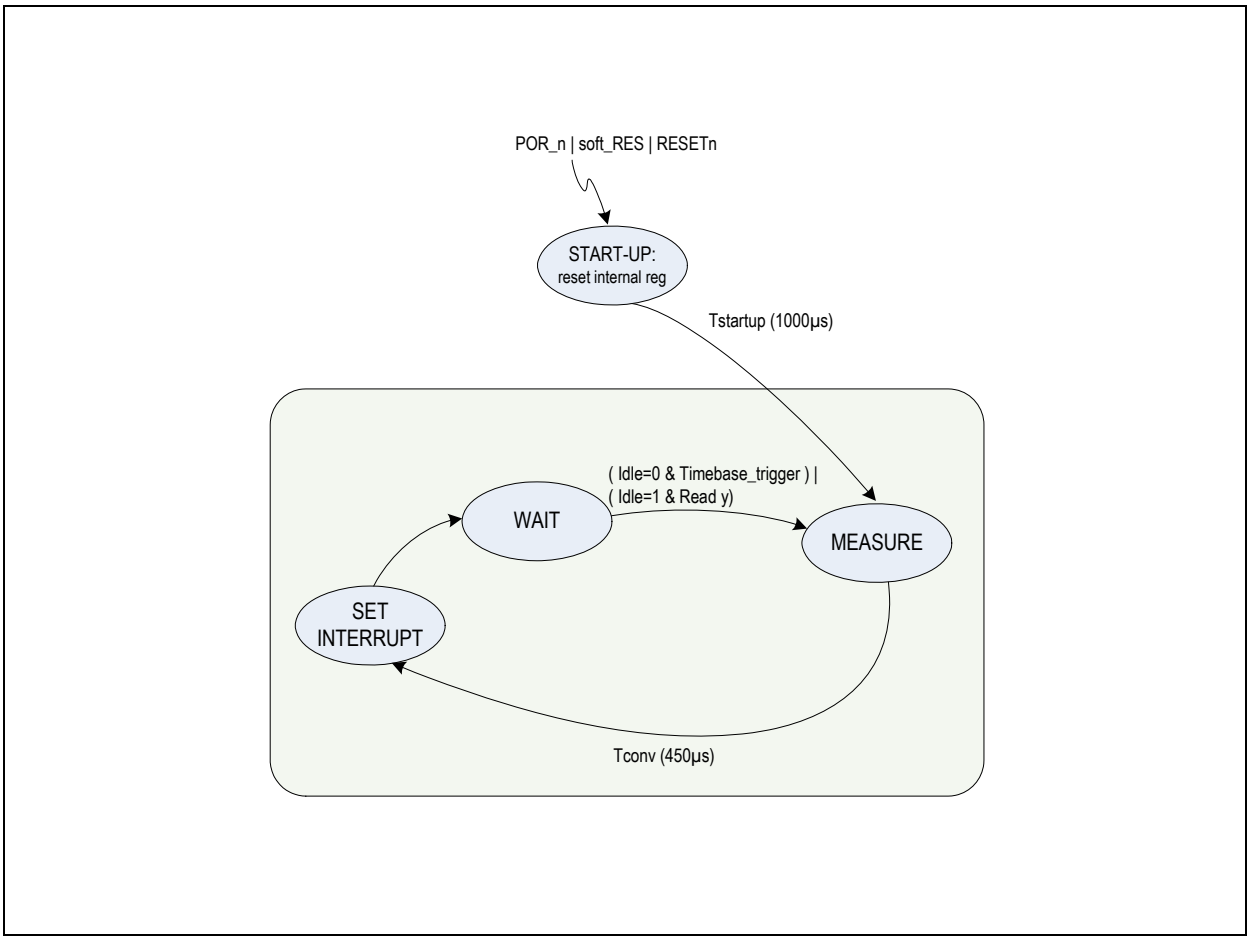

START-UP.

After power up and after applying a soft reset (Reg 0Fh [1]) or hardware reset (RESETn input, LOW pulse >100ns), AS5013 enters the START-UP state. During this state the internal registers are loaded with their reset values. After min. Tstartup = 1000µs, the AS5013 will perform one measurement and switches automatically into the WAIT state.

MEASURE.

The hall element data are measured, x/y coordinates are calculated and available in registers 10h and 11h after Tconv = 450µs max.

SET INTERRUPT.

The INTn output is set, depending on the interrupt mode configured in the control register Reg 0Fh [2] and Reg 0Fh [3]

WAIT.

The module is now in waiting status. A new measurement will occur depending on the power mode (Reg 0Fh [7] Idle = 0 or 1) and the Timebase Reg 0Fh [6:4]

7.5 I²C Interface

The AS5013 supports the 2-wire high-speed I²C protocol in device mode, according to the NXP specification UM10204.

The host MCU (master) has to initiate the data transfers. The 7-bit device address of the AS5013 depends on the state at the pin ADDR.

ADDR = 0 → Slave address ='1000 000' (40h)

ADDR = 1 → Slave address ='1000 001' (41h)

For other I²C addresses, please contact *ams*.

Supported modes (slave mode):

- Random/Sequential Read
- Byte/Page Write
- Standard Mode: 0 to 100kHz clock frequency
- Fast Mode: 0 to 400kHz clock frequency
- High Speed: 0 to 3.4MHz clock frequency

The SDA signal is bidirectional and is used to read and write the serial data. The SCL signal is the clock generated by the host MCU, to synchronize the SDA data in read and write mode. The maximum I²C clock frequency is 3.4MHz, data are triggered on the rising edge of SCL.

7.5.1 Interface Operation

Figure 8. I²C Timing Diagram for FS-mode

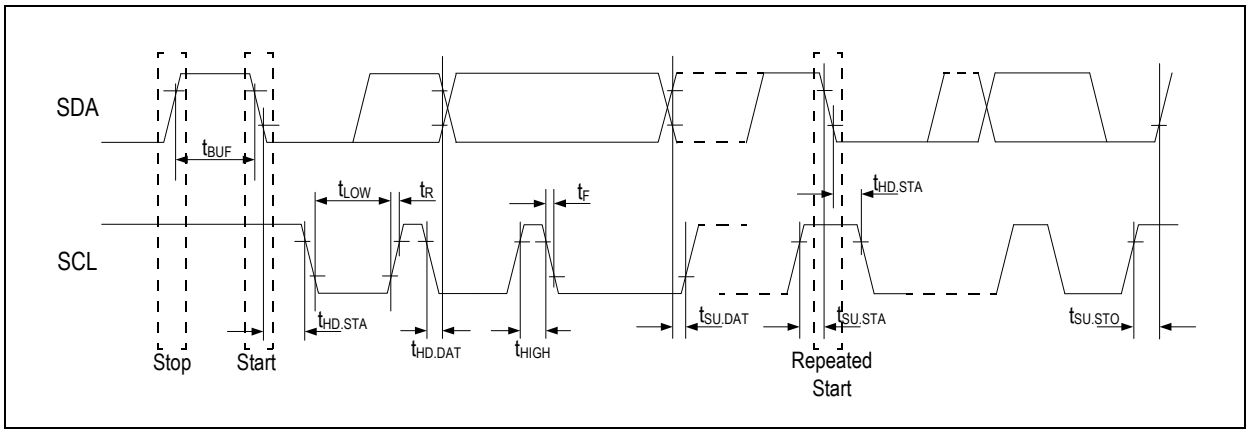

Figure 9. Timing Diagram for HS-mode

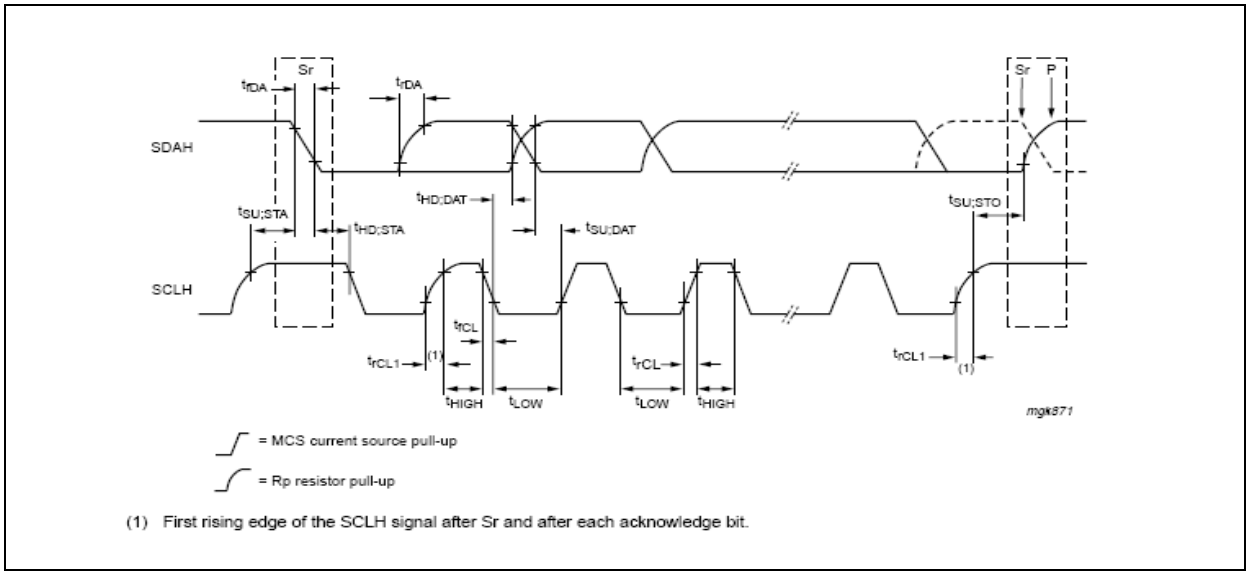

7.5.2 I²C Electrical Specification

Standard-mode, Fast-mode, High Speed-mode

Symbol	Parameter	Condition	Min	Max	Unit
V_{IL}	LOW-level input voltage		-0.5	0.3VDDp	V
V_{IH}	HIGH-level input voltage		0.7VDDp	VDDp + 0.5 *(see note 1)*	V
V_{hys}	Hysteresis of Schmitt Trigger inputs	VDDp < 2V	0.1VDDp		V
V_{OL}	LOW-level output voltage (open-drain or open-collector) at 3mA sink current	VDDp < 2V	-	0.2VDDp	V
I_{OL}	LOW-level output current	V_{OL} = 0.4V	-	-	mA
I_{CS}	Pull-up current of SCLH current source	SCLH output levels between 0.3VDDp and 0.7VDDp	3	12	mA
t_{SP}	Pulse width of spikes that must be suppressed by the input filter	In HS-mode	-	10 *(see note 2)*	ns
		In Fast-mode		50 *(see note 2)*	ns
I_i	Input current at each I/O Pin	Input voltage between 0.1VDDp and 0.9VDDp		10 *(see note 3)*	µA
C_B	Total capacitive load for each bus line		-	400	pF
$C_{I/O}$	I/O capacitance (SDA, SCL)		-	10	pF

Notes:

1. Maximum V_{IH} = VDDpmax +0.5V or 5.5V, which ever is lower.
2. Input filters on the SDA and SCL inputs suppress noise spikes of less than 50ns in Fast-mode and 10ns in HS-mode.
3. I/O pins of Fast-mode and Fast-mode plus devices must not obstruct the SDA and SCL lines if VDDp is switched off.

7.5.3 I²C Timing

Symbol	Parameter	Condition	Fast-mode		HS-mode C_B=100pF		HS-mode C_B=400pF[1]		Unit
			Min	Max	Min	Max	Min	Max	
f_{SCLK}	SCL clock Frequency		-	400	-	3400	-	1700	kHz
t_{BUF}	Bus Free Time; time between STOP and START Condition		500	-	500	-	500	-	ns
$t_{HD;STA}$	Hold Time; (Repeated) START Condition[2]		600	-	160	-	160	-	ns
t_{LOW}	LOW Period of SCL Clock		1300	-	160	-	320	-	ns
t_{HIGH}	HIGH Period of SCL Clock		600	-	60	-	120	-	ns
$t_{SU;STA}$	Setup Time for a Repeated START condition		600	-	160	-	160	-	ns
$t_{HD;DAT}$	Data Hold Time[3]		0	900	0	70	0	150	ns
$t_{SU;DAT}$	Data Setup Time[4]		100	-	10	-	10	-	ns
t_{rCL}	Rise time of SCLH signal	External pull-up source of 3mA	-	-	10	40	20	80	ns

Symbol	Parameter	Condition	Fast-mode		HS-mode C_B=100pF		HS-mode C_B=400pF[1]		Unit
			Min	Max	Min	Max	Min	Max	
t_{rCL1}	Rise time of SCLH signal after repeated START condition and after an acknowledge bit	External pull-up source of 3mA	-	-	10	80	20	160	ns
t_R	Rise Time of SDA and SCL Signals		20+0.1C_B	120	-	-	-	-	ns
t_F	Fall time of SDA and SCL signals		20+0.1C_B	120	-	-	-	-	ns
$t_{SU;STO}$	Setup Time for STOP Condition		600	-	160	-	160	-	ns
V_{nL}	Noise margin at LOW level	For each connected device (including hysteresis)	0.1VDDp	-	0.1VDDp	-	0.1VDDp	-	V
V_{nH}	Noise margin at HIGH level		0.2VDDp	-	0.2VDDp	-	0.2VDDp	-	V

1. For bus line loads C_B between 100pF and 400 pF the timing parameters must be linearly interpolated.
2. After this time the first clock is generated.
3. A device must internally provide a minimum hold time (300n for Fast-mode, 80ns / max 150ns for High-speed mode) for the SDA signal (referred to the V_{IHmin} of the SCL) to bridge the undefined region of the falling edge of SCL.
4. A fast-mode device can be used in standard-mode system, but the requirement $t_{SU;DAT}$ = 250ns must then be met. This is automatically the case if the device does not stretch the LOW period of the SCL signal. If such a device does stretch the LOW period of the SCL signal, it must output the next data bit to the SDA line t_{Rmax} + $t_{SU;DAT}$ = 1000 + 250 = 1250ns before the SCL line is released.

7.5.4 I²C Modes

The AS5013 supports the I²C bus protocol. A device that sends data onto the bus is defined as a transmitter and a device receiving data as a receiver. The device that controls the message is called a master. The devices that are controlled by the master are referred to as slaves. A master device that generates the serial clock (SCL), controls the bus access, and generates the START and STOP conditions must control the bus. The AS5013 operates as a slave on the I²C bus. Connections to the bus are made through the open-drain I/O lines SDA and the input SCL. Clock stretching is not included.

Automatic Increment of Address Pointer.

The AS5013 slave automatically increments the address pointer after each byte transferred. The increase of the address pointer is independent from the address being valid or not.

Invalid Addresses.

If the user sets the address pointer to an invalid address, the address byte is not acknowledged. Nevertheless a read or write cycle is possible. The address pointer is increased after each byte.

Reading.

When reading from a wrong address, the AS5013 slave data returns all zero. The address pointer is increased after each byte. Sequential read over the whole address range is possible including address overflow.

Writing.

A write to a wrong address is not acknowledged by the AS5013 slave, although the address pointer is increased. When the address pointer points to a valid address again, a successful write access is acknowledged. Page write over the whole address range is possible including address overflow.

The following bus protocol has been defined:

- Data transfer may be initiated only when the bus is not busy.
- During data transfer, the data line must remain stable whenever the clock line is HIGH. Changes in the data line while the clock line is HIGH are interpreted as start or stop signals.

Accordingly, the following bus conditions have been defined:

Bus Not Busy: Both data and clock lines remain HIGH.

Start Data Transfer: A change in the state of the data line, from HIGH to LOW, while the clock is HIGH, defines a START condition.

Stop Data Transfer: A change in the state of the data line, from LOW to HIGH, while the clock line is HIGH, defines the STOP condition.

Data Valid: The state of the data line represents valid data when, after a START condition, the data line is stable for the duration of the HIGH period of the clock signal. The data on the line must be changed during the LOW period of the clock signal. There is one clock pulse per bit of data. Each data transfer is initiated with a START condition and terminated with a STOP condition. The number of data bytes transferred between START and STOP conditions are not limited, and are determined by the master device. The information is transferred byte-wise and each receiver acknowledges with a ninth bit.

Acknowledge: Each receiving device, when addressed, is obliged to generate an acknowledge after the reception of each byte. The master device must generate an extra clock pulse that is associated with this acknowledge bit.

A device that acknowledges must pull down the SDA line during the acknowledge clock pulse in such a way that the SDA line is stable LOW during the HIGH period of the acknowledge-related clock pulse. Of course, setup and hold times must be taken into account. A master must signal an end of READ access to the slave by not generating an acknowledge bit on the last byte that has been clocked out of the slave. In this case, the slave must leave the data line HIGH to enable the master to generate the STOP condition.

Figure 10. Data Read (Write Pointer, Then Read) - Slave Receive and Transmit

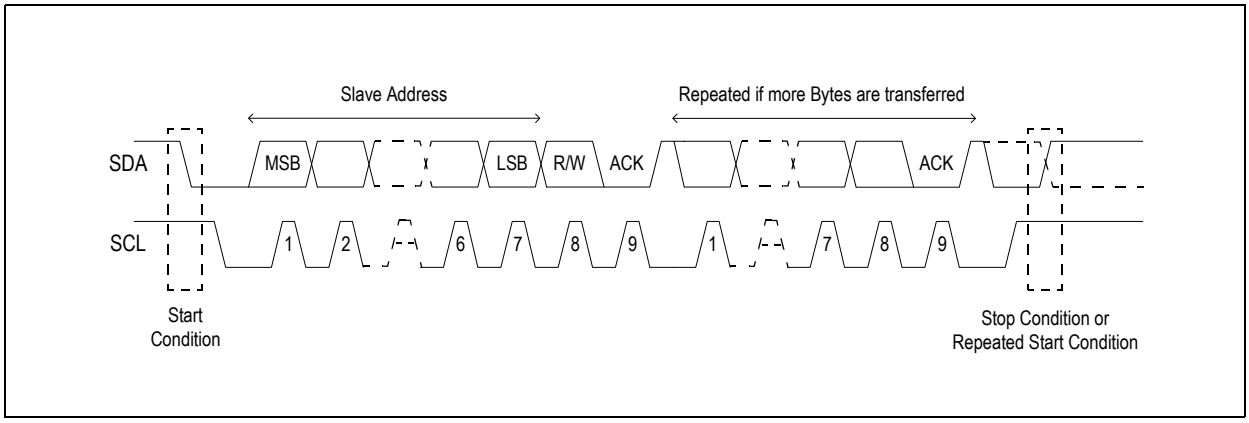

Depending upon the state of the R/W bit, two types of data transfer are possible:

- **Data transfer from a master transmitter to a slave receiver:** The first byte transmitted by the master is the slave address, followed by R/W = 0. Next follows a number of data bytes. The slave returns an acknowledge bit after each received byte. If the slave does not understand the command or data it sends a “not acknowledge”. Data is transferred with the most significant bit (MSB) first.
- **Data transfer from a slave transmitter to a master receiver:** The master transmits the first byte (the slave address). The slave then returns an acknowledge bit, followed by the slave transmitting a number of data bytes. The master returns an acknowledge bit after all received bytes other than the last byte. At the end of the last received byte, a “not acknowledge” is returned. The master device generates all of the serial clock pulses and the START and STOP conditions. A transfer is ended with a STOP condition or with a repeated START condition. Since a repeated START condition is also the beginning of the next serial transfer, the bus is not released. Data is transferred with the most significant bit (MSB) first.

The AS5013 can operate in the following two modes:

- **Slave Receiver Mode (Write Mode):** Serial data and clock are received through SDA and SCL. Each byte is followed by an acknowledge bit (or by a not acknowledge depending on the address-pointer pointing to a valid position). START and STOP conditions are recognized as the beginning and end of a serial transfer. Address recognition is performed by hardware after reception of the slave address and direction bit (see Figure 11). The slave address byte is the first byte received after the START condition. The slave address byte contains the 7-bit AS5013 address, which is stored in the OTP memory.
  The 7-bit slave address is followed by the direction bit (R/W), which, for a write, is 0. After receiving and decoding the slave address byte the device outputs an acknowledge on the SDA. After the AS5013 acknowledges the slave address + write bit, the master transmits a register address to the AS5013. This sets the address pointer on the AS5013. If the address is a valid readable address the AS5013 answers by sending an acknowledge. If the address-pointer points to an invalid position a “not acknowledge” is sent. The master may then transmit zero or more bytes of data. In case of the address pointer pointing to an invalid address the received data are not stored. The address pointer will increment after each byte transferred independent from the address being valid. If the address-pointer reaches a valid position again, the AS5013 answers with an acknowledge and stores the data. The master generates a STOP condition to terminate the data write.

Figure 11. Data Write - Slave Receiver Mode

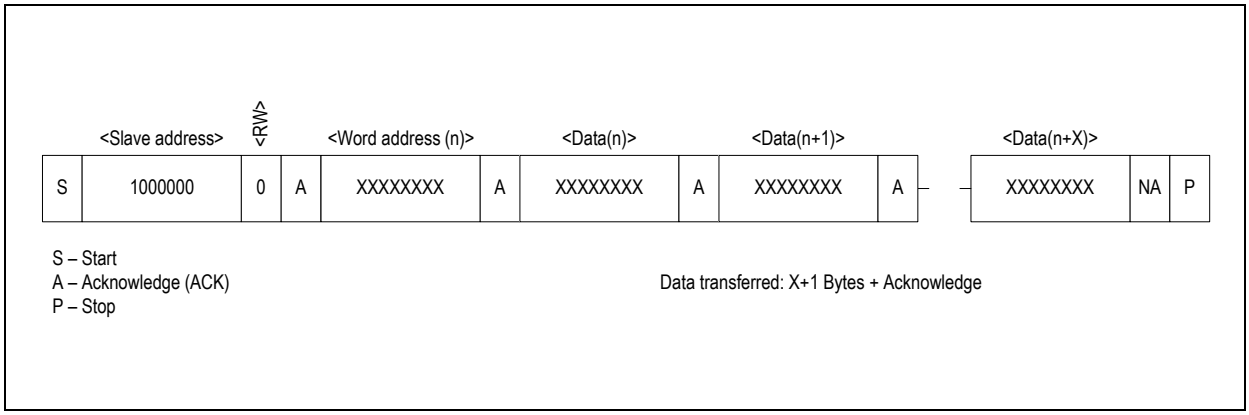

- **Slave Transmitter Mode (Read Mode):** The first byte is received and handled as in the slave receiver mode. However, in this mode, the direction bit indicates that the transfer direction is reversed. Serial data is transmitted on SDA by the AS5013 while the serial clock is input on SCL. START and STOP conditions are recognized as the beginning and end of a serial transfer. The slave address byte is the first byte received after the master generates a START condition. The slave address byte contains the 7-bit AS5013 address. The default address is 80h. The 7-bit slave address is followed by the direction bit (R/W), which, for a read, is 1. After receiving and decoding the slave address byte the device outputs an acknowledge on the SDA line. The AS5013 then begins to transmit data starting with the register address pointed to by the register pointer. If the register pointer is not written to before the initiation of a read mode the first address that is read is the last one stored in the register pointer. The AS5013 must receive a “not acknowledge” to end a read.

Figure 12. Data Read (from Current Pointer Location) - Slave Transmitter Mode

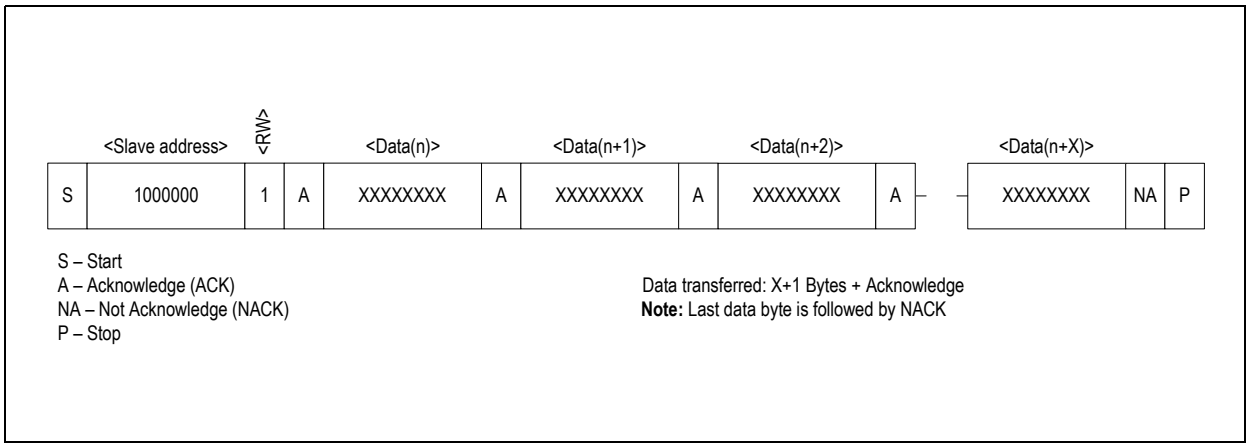

Figure 13. Data Read (from New Pointer Location) - Slave Transmitter Mode

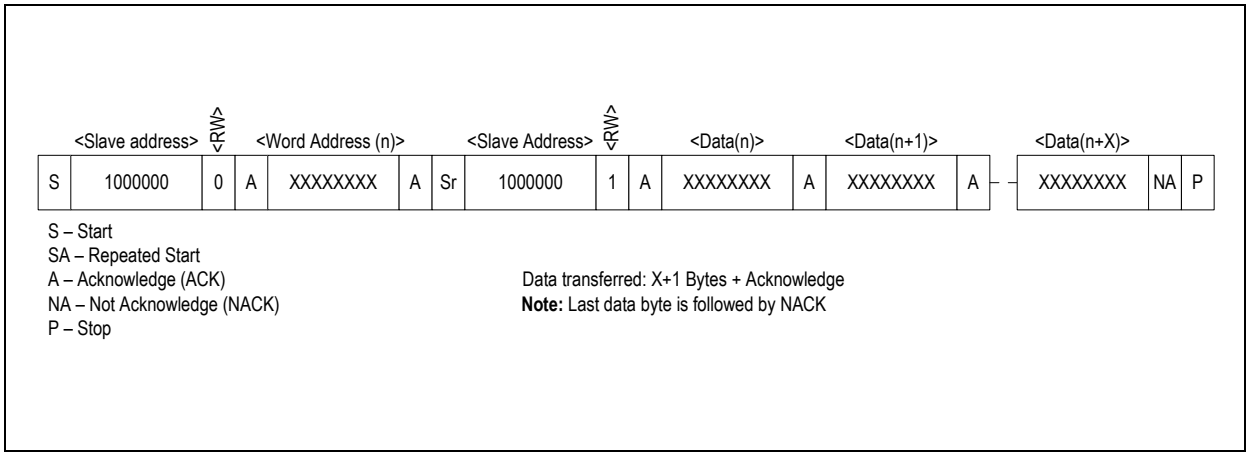

High Speed Mode.

The AS5013 is capable to work in HS-mode.

For switching to HS-mode the Master has to send the sequence: START, MASTER CODE, NACK. This sequence is sent in FS-mode. As no device is allowed to acknowledge the master code, the master code is followed by a not-acknowledge. After a device receives the master code it has to switch from FS-settings to HS-settings within $t_{SU.STA}$ which is 160ns for HS-mode. The device stays in HS-mode as long as it does not receive a STOP command. After receiving a STOP command it has to switch back form HS-settings to FS-settings, which has to be competed within the minimum bus free time t_{BUF} which is 500ns.

When switching to HS-mode the slave has to:

- Adapt the SDAH and SCLH input filters according to the spike suppression requirement required in HS-mode. In HS-mode spikes up to 10ns, in FS-mode spikes up to 50ns have to be suppressed.
- Adapt the setup and hold times according to the HS-mode requirement. In HS-mode an internal hold time for SDA for START/STOP detection of 80ns (max. 150ns), in FS-mode an internal hold time of 160ns (max. 250ns) has to be provided.
- Adapt the slope control for SDAH output stage.

Figure 14. Data Transfer Format in HS-mode

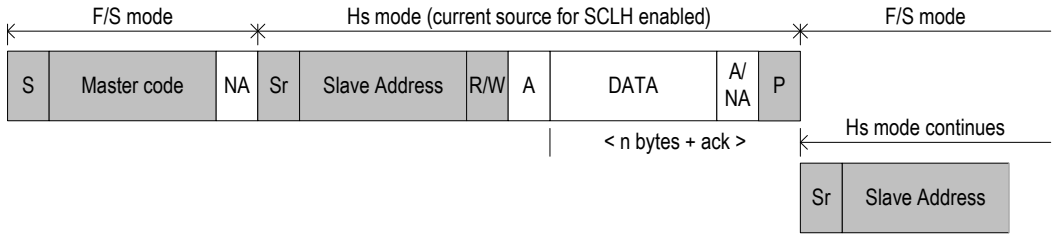

Figure 15. A Complete HS-mode Transfer

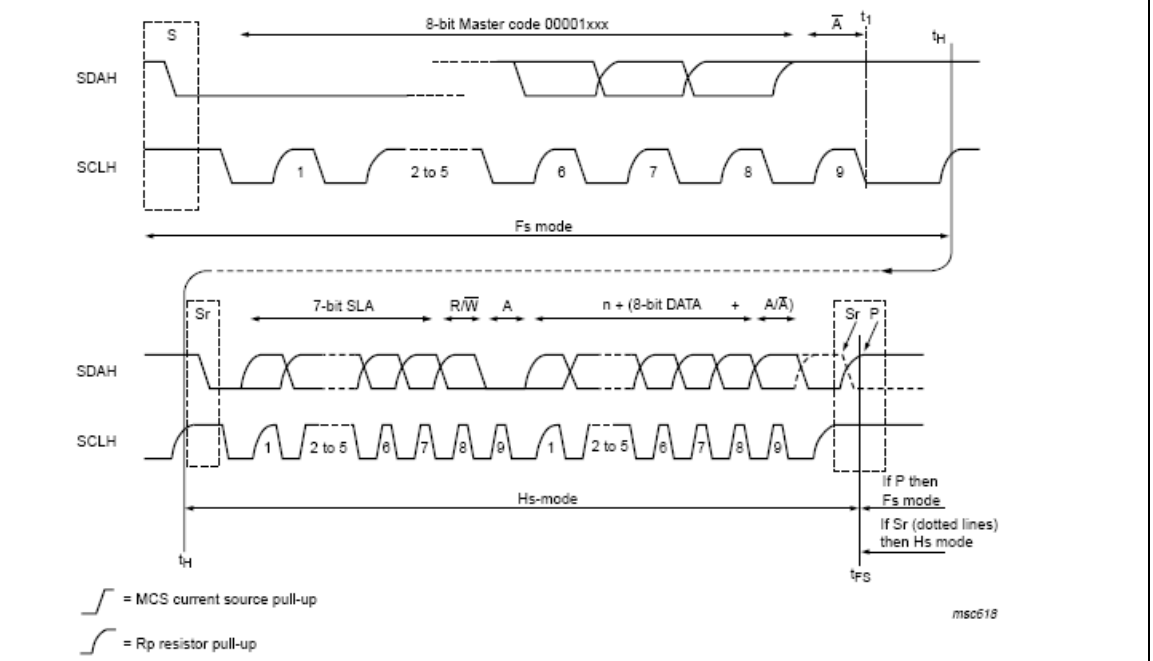

Automatic Increment of Address Pointer.

The AS5013 slave automatically increments the address pointer after each byte transferred. The increase of the address pointer is independent from the address being valid or not.

Invalid Addresses.

If the user sets the address pointer to an invalid address, the address byte is not acknowledged. Nevertheless a read or write cycle is possible. The address pointer is increased after each byte.

Reading: When reading from a wrong address, the AS5013 slave returns all zero. The address pointer is increased after each byte. Sequential read over the whole address range is possible including address overflow.

Writing: A write to a wrong address is not acknowledged by the AS5013 slave, although the address pointer is increased. When the address pointer points to a valid address again, a successful write accessed is acknowledged. Page write over the whole address range is possible including address overflow.

7.5.5 SDA, SCL Input Filters

Input filters for SDA and SCL inputs are included to suppress noise spikes of less than 50ns. Furthermore, the SDA line is delayed by 120ns to provide an internal hold time for Start/Stop detection to bridge the undefined region of the falling edge of SCL. The delay needs to be smaller than $t_{HD.STA}$ 260ns.

8 I²C Registers

8.1 Control Register 1 (0Fh)

Bit 7	Bit 6	Bit 5	Bit 4	Bit 3	Bit 2	Bit 1	Bit 0
Idle	Time base bit[2]	Time base bit[1]	Time base bit[0]	INT_disable	INT_function	Soft_rst	Data_valid
R/W	R/W	R/W	R/W	R/W	R/W	R/W	R
Reset value: 1111 0000							

Bit	Bit Description
7	0 = Low Power Mode The measurements are triggered with an internal low power oscillator – the user can select between 8 different timings by setting the low power timebase (Control Register 1 [6:4])
	1 = Idle Mode (default) A new measurement cycle is started after the I²C ACK bit following the read out of the Y_res_int register 11h. The readout rate and thus the power consumption is externally controlled by the host MCU.
6:4	Configure the time base of the automatic wakeup in Low Power Mode (see Table 5).
3	0 = Interrupt output INTn is enabled (default)
	1 = Interrupt output INTn is disabled and is fixed to Hi-Z
2	0 = Interrupt output INTn is active '0' after each measurement (default): - Automatically triggered in Low Power mode, depending on the time base chosen - 450µs after Y readout in Idle mode The interrupt is cleared by the I²C ACK bit after reading the Y_res_int 11h. In block read mode, the several other bytes could be transferred before the interrupt is cleared.
	1 = Interrupt output INTn is active '0' when the movement of the magnet exceeds the Dead Zone area (see Figure 16). The Dead Zone area is set by registers Xp (Reg 12h), Xn (Reg 13h), Yp (Reg 14h), Yn (Reg 15h). The interrupt is cleared by the I²C ACK bit after reading the Y_res_int register 11h, and will be active '0' at the next measurement if the magnet is still in the Detection Area. In block read mode, several other bytes could be transferred before the interrupt is cleared when the Y_res_int register is read. It is recommended to use this mode with the Low Power mode (Idle = 0), in order to wake up automatically a system when the magnet has been moved away from the center. The polling time is set by the Low Power time base bit [6:4].
1	0 = Normal mode (default)
	1 = Reset mode. All the internal registers are loaded with their reset value. The Control Register 1 is loaded as well with the value 1111 0000, then the Soft_rst bit goes back to 0 (Normal mode) once the internal reset sequence is finished.
0	0 = Conversion of new coordinates ongoing, no valid coordinate is present in the X and Y_res_int registers. Reading those registers at that moment can give wrong values.
	1 = New coordinate values are ready in X and Y_res_int registers.

Note: The values in Control Register 1, X_register and Y_res_int register are frozen when the I²C address pointer is set to 0Fh, 10h or 11h. This ensures that the Data_valid bit, X and Y values are taken at the same time. In order to get updated values from those registers, set the address pointer to any other address.

Table 5. Configuration

Low Power time base CONFIG_REG1 0Fh [6:4]	$\Delta t_{timebase}$ (ms)	Average Core Current IDD (µA) @T_{AMB} = 25ºC
000b	20	190
001b	40	97
010b	80	50
011b	100	40
100b	140	30
101b	200	22
110b	260	17
111b (default)	320	15

Figure 16. Dead Zone Representation with INT_function=1

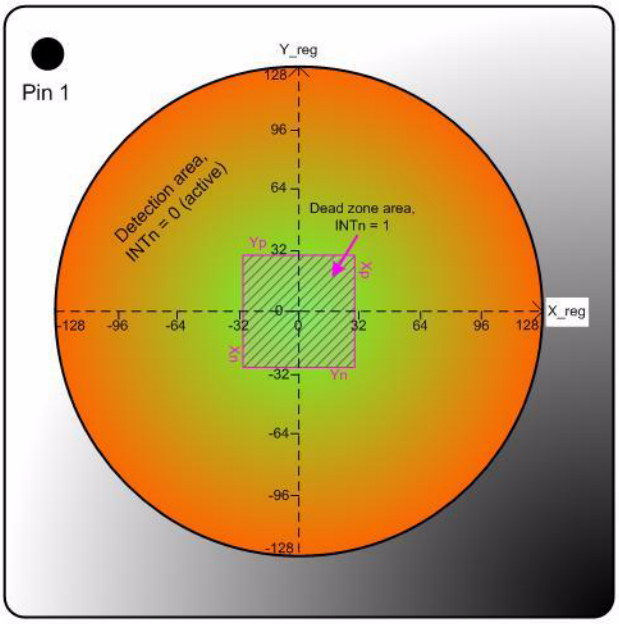

8.2 X Register (10h)

Bit 7	Bit 6	Bit 5	Bit 4	Bit 3	Bit 2	Bit 1	Bit 0
X[7]	X[6]	X[5]	X[4]	X[3]	X[2]	X[1]	X[0]
R	R	R	R	R	R	R	R
Reset value: 0000 0000							

Bit	Bit Description
7:0	X coordinate, Two's complement format (signed -128 ~ +127).

8.3 Y_res_int Register (11h)

Bit 7	Bit 6	Bit 5	Bit 4	Bit 3	Bit 2	Bit 1	Bit 0
Y[7]	Y[6]	Y[5]	Y[4]	Y[3]	Y[2]	Y[1]	Y[0]
R	R	R	R	R	R	R	R
Reset value: 0000 0000							

Bit	Bit Description
7:0	Y coordinate, Two's complement format (signed -128 ~ +127). Reading this register will reset the INTn output to Hi-Z after the ACK bit of Y_res_int register readback.

8.4 Xp Register (12h)

Bit 7	Bit 6	Bit 5	Bit 4	Bit 3	Bit 2	Bit 1	Bit 0
Xp[7]	Xp[6]	Xp[5]	Xp[4]	Xp[3]	Xp[2]	Xp[1]	Xp[0]
R/W	R/W	R/W	R/W	R/W	R/W	R/W	R/W
Reset value: 0000 0101 (5d)							

Bit	Bit Description
7:0	Xp range value, Two's complement (signed: -128 ~ +127). Determines the LEFT threshold for the activation of INTn output (if output enabled), when bit INT_function = 1 (see Control Register 1 (0Fh) on page 17).

8.5 Xn Register (13h)

Bit 7	Bit 6	Bit 5	Bit 4	Bit 3	Bit 2	Bit 1	Bit 0
Xn[7]	Xn[6]	Xn[5]	Xn[4]	Xn[3]	Xn[2]	Xn[1]	Xn[0]
R/W	R/W	R/W	R/W	R/W	R/W	R/W	R/W
Reset value: 1111 1011 (-5d)							

Bit	Bit Description
7:0	Xn range value, Two's complement (signed: -128 ~ +127). Determines the RIGHT threshold for the activation of INTn output (if output enabled), when bit INT_function = 1 (see Control Register 1 (0Fh) on page 17).

8.6 Yp Register (14h)

Bit 7	Bit 6	Bit 5	Bit 4	Bit 3	Bit 2	Bit 1	Bit 0
Yp[7]	Yp[6]	Yp[5]	Yp[4]	Yp[3]	Yp[2]	Yp[1]	Yp[0]
R/W	R/W	R/W	R/W	R/W	R/W	R/W	R/W
Reset value: 0000 0101 (5d)							

Bit	Bit Description
7:0	Yp range value, Two's complement (signed: -128 ~ +127). Determines the TOP threshold for the activation of INTn output (if output enabled), when bit INT_function = 1 (see Control Register 1 (0Fh) on page 17).

8.7 Yn Register (15h)

Bit 7	Bit 6	Bit 5	Bit 4	Bit 3	Bit 2	Bit 1	Bit 0
Yn[7]	Yn[6]	Yn[5]	Yn[4]	Yn[3]	Yn[2]	Yn[1]	Yn[0]
R/W	R/W	R/W	R/W	R/W	R/W	R/W	R/W
Reset value: 1111 1011 (-5d)							

Bit	Bit Description
7:0	Yn range value, Two's complement (signed: -128 ~ +127). Determines the BOTTOM threshold for the activation of INTn output (if output enabled), when bit INT_function = 1 (see Control Register 1 (0Fh) on page 17).

8.8 M_ctrl Register (2Bh)

Bit 7	Bit 6	Bit 5	Bit 4	Bit 3	Bit 2	Bit 1	Bit 0
M_ctrl[7]	M_ctrl[6]	M_ctrl[5]	M_ctrl[4]	M_ctrl[3]	M_ctrl[2]	M_ctrl[1]	M_ctrl[0]
R/W	R/W	R/W	R/W	R/W	R/W	R/W	R/W
Reset value: 0000 0000 (00h)							

Bit	Bit Description
7:0	Middle hall element C5 control register to improve the linearity of XY outputs for the whole mechanical XY displacement of the magnet. Use the default value for d=2*0.8mm standard axial magnet. For more information on how to configure this parameter, please contact *ams*.

8.9 J_ctrl Register (2Ch)

Bit 7	Bit 6	Bit 5	Bit 4	Bit 3	Bit 2	Bit 1	Bit 0
J_ctrl[7]	J_ctrl[6]	J_ctrl[5]	J_ctrl[4]	J_ctrl[3]	J_ctrl[2]	J_ctrl[1]	J_ctrl[0]
R/W	R/W	R/W	R/W	R/W	R/W	R/W	R/W
Reset value: 0000 0110 (06h)							

Bit	Bit Description
7:0	Sector dependent attenuation of the outer Hall elements C1..C4 in order to improve the linearity of XY outputs for the whole mechanical XY displacement of the magnet. Use the default value for d=2*0.8mm standard axial magnet. For more information on how to configure this parameter, please contact *ams*.

8.10 T_ctrl Register (2Dh)

Bit 7	Bit 6	Bit 5	Bit 4	Bit 3	Bit 2	Bit 1	Bit 0
T_ctrl[7]	T_ctrl[6]	T_ctrl[5]	T_ctrl[4]	T_ctrl[3]	T_ctrl[2]	T_ctrl[1]	T_ctrl[0]
R/W	R/W	R/W	R/W	R/W	R/W	R/W	R/W
Reset value: 0000 1001 (09h)							

Bit	Bit Description
7:0	Scaling control register. This register controls the scaling factor of the XY coordinates to fit to the 8-bit X and Y_res_int register (full dynamic range). The following table includes scaling factors referenced to the default setting T_ctrl = 9 (100% scaling).

T_ctrl	Scaling Factor %
31	31.3
30	32.2
29	33.4
28	34.6
27	35.7
26	37.1
25	38.5
24	40.0
23	41.6
22	43.6
21	45.5
20	47.7
19	50.0
18	52.5
17	55.5
16	58.8
15	62.5
14	66.6
13	71.5
12	77.0
11	83.4
10	90.8
9	100.0
8	111.1

T_ctrl	Scaling Factor %
47	117.6
7	125.0
45	133.4
6	142.8
43	153.9
5	166.6
41	181.8
4	200.0
79	210.5
39	222.3
77	235.4
3	250.0
75	266.6
37	285.7
73	307.6
2	333.4
71	363.7
35	400.0
69	444.5
1	500.0
67	571.5

8.11 Control Register 2 (2Eh)

Bit 7	Bit 6	Bit 5	Bit 4	Bit 3	Bit 2	Bit 1	Bit 0
Test	Test	Test	ext_clk_en	use_static_offset	EN_offset_comp	inv_spinning	pptrim_en
R/W	R/W	R/W	R/W	R/W	R/W	R/W	R/W
Reset value: 1000 0100							

Bit	Bit Description
7	Test bit. Must configured '1'.
6:4	Test bit. Must configured '000'.
3	Test bit. Must configured '0'.
2	Test bit. Must configured '1'.
1	Magnet Polarity bit. Must be set after power up, depending on how the magnet is placed (see Figure 17).
0	Test bit. Must configured '0'.

Figure 17. Magnet Configuration

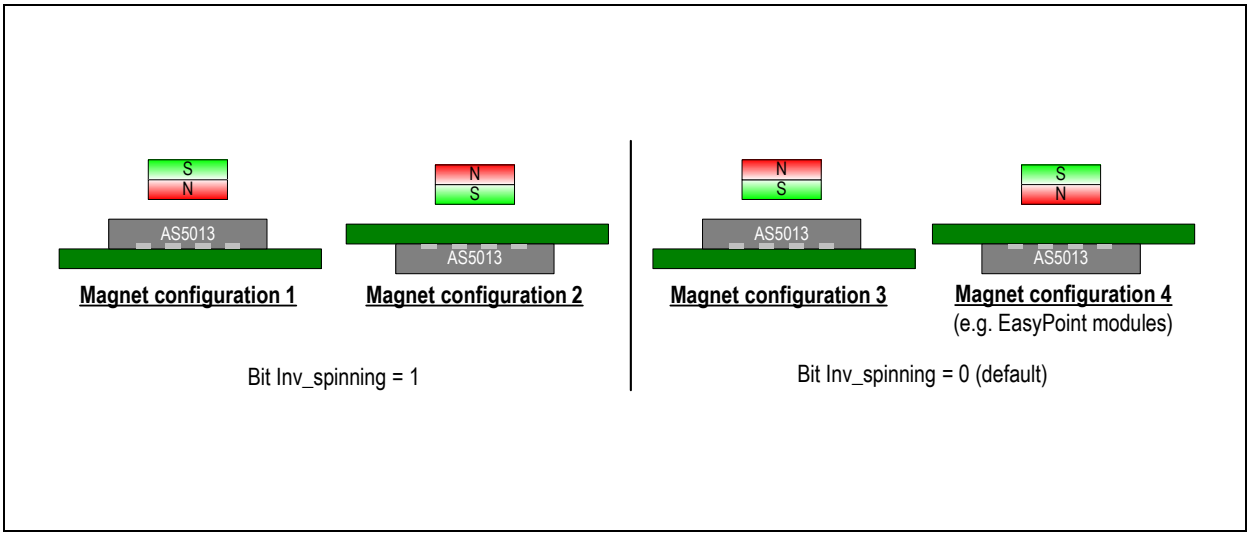

Note: In order to know the polarity of the magnet without any testing device, please refer to Registers Initialization on page 24.

8.12 Hall Element Direct Read Registers (16h to 29h)

Each hall element C1..C5 can be read independently, after each interrupt (data ready).

One hall element value consists of two 12-bit signed-registers: Cx_neg and Cx_pos. For each conversion cycle (i.e. after a readout or Y_res in idle mode, or at each time-based conversion cycle in Low Power mode), each hall element is read twice: With normal spin (result Cx_pos) and then with inverted spin (result Cx_neg) in order to remove any hall voltage offset from the hall elements.

The formula to read any hall element Cx:

$$Cx = (Cx_pos - Cx_neg) / 2 \qquad (EQ\ 1)$$

Where:

Cx_pos = (Cx_pos[11:8] << 8) | Cx_pos[7:0]
Cx_neg = (Cx_neg[11:8] << 8) | Cx_neg[7:0]

8.13 Hall Element Direct Read Registers (2Ah)

Bit 7	Bit 6	Bit 5	Bit 4	Bit 3	Bit 2	Bit 1	Bit 0
0	0	AGC5	AGC4	AGC3	AGC2	AGC1	AGC0
R	R	R/W	R/W	R/W	R/W	R/W	R/W
Reset value: 0010 0000							

The AGC register controls the sensitivity of each hall element C1..C5, in order to stay in the larger dynamic range of the 12-bit ADC of the AS5013. In order to determine the best value to be set during the AS5013 initialization, place your magnet on the 0,0 position (centered on C5 hall element), and increase the AGC value to obtain the nearest value to 2867 (= 70% of 4096).

It is possible that this value cannot be reached with small magnets or with large airgaps. In that case set AGC to 3Fh, which is the maximum sensitivity.

8.14 Power ON

The AS5013 has a Power ON Reset (POR) cell to monitor the VDD voltage at startup and reset all the internal registers.

After the internal reset is completed, the POR cell is disabled in order to save current during normal operation.

If VDD drops below 2.7V down to 0.2V, the POR cell will not be enabled back, and the registers will not be correctly reseted or can get random values.

Note: It is highly recommended to control the external RESETn signal by applying a LOW pulse of >100ns once VDD reached 2.7V and VDDp reached 1.7V.

Figure 18. Power-up Sequence

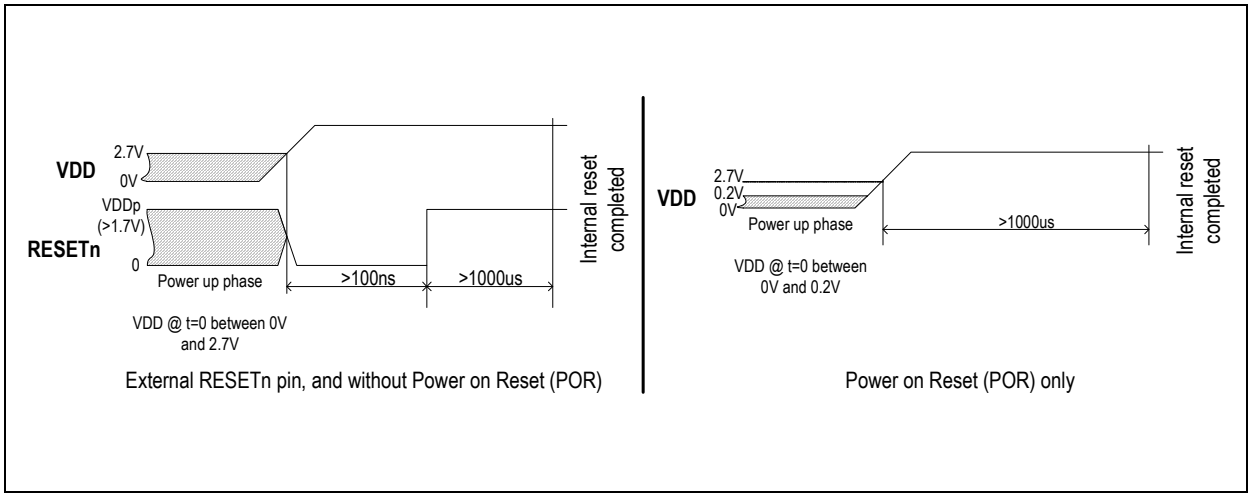

8.15 Registers Initialization

After Power Up, the following sequence must be performed:

1. VDD and VDDp Power up, and reached their nominal values (VDD>2.7V, VDDp>1.7V).
2. RESETn LOW during >100ns
3. Delay 1000µs
4. Loop check register [0Fh] until the value F0h or F1h is present (reset finished, registers to their default values)
5. *Optional*: Write value 86h into register [2Eh] → Invert magnet polarity. See Control Register 2 (2Eh) on page 22.
6. Configure register [2Bh] → Configure M_ctrl middle hall element control
7. Configure register [2Ch] → Configure J_ctrl attenuation factor
8. Configure register [2Dh] → Configure T_ctrl scaling factor
9. Configure the wanted Power Mode into register [0Fh] (Idle mode or Low Power Mode with Timebase configuration)
10. X Y coordinates are ready to be read.

Note: In order to detect if the magnet polarity is correct, read the C5 middle hall element when the magnet is centered.

C5 = (C5_pos – C5_neg) / 2

With: C5_pos = (c5_pos[11:8] << 8) | c5_pos[7:0]

C5_neg = (c5_neg[11:8] << 8) | c5_neg[7:0]

C5 must always be positive.

If C5 is negative, then invert the bit inv_spinning in the Control Register 2 (2Eh). C5 will become positive.

8.16 Registers Table

The following registers / functions are accessible over the serial I²C interface.

Table 6. Registers

Register	Number of bits	Access	Address	Format	Reset Value	Bit	Description
IC Identification							
ID Code	8	R	0C		0Ch	<7:0>	8-bit Manufacture ID Code
ID Version	8	R	0D		0Dh	<7:0>	8-bit Component ID Version
Silicon Revision	8	R	0E		00h	<7:0>	8-bit Silicon Revision
Control_register_1							
Idle	1	R/W	0Fh		1b	<7>	1: Idle mode 0: Low Power mode
Low_power_timebase	3	R/W	0Fh		111b	<6:4>	Low Power readout time base register
INT_disable	1	R/W	0Fh		0b	<3>	Disables the interrupt functionality. 1: Interrupt disabled 0: Interrupt enabled
INT_function	1	R/W	0Fh		0b	<2>	Interrupt control register 0: interrupt goes low with every new calculated x/y coordinates 1: interrupt pin goes low in when new x/y coordinates are calculated and the magnet has exited the xp, xn, yp, yn threshold values
soft_rst	1	R/W	0Fh		0b	<1>	Soft Reset 0: Normal mode 1: all registers return to their respective reset value
data_valid	1	R	0Fh		0b	<0>	Data valid indicator 0: X/Y calculation ongoing 1: X/Y calculation finished, coordinates ready

Table 6. Registers

Register	Number of bits	Access	Address	Format	Reset Value	Bit	Description
X/Y Coordinate Registers							
x	8	R	10h	two's comp.	00h	<7:0>	Result
y_res_int	8	R	11h	two's comp.	00h	<7:0>	Result, resets the interrupt flag at the value ACK
Range Settings							
xp	8	R/W	12h	two's comp.	5h (5 dec)	<7:0>	wake up threshold @ positive X -direction
xn	8	R/W	13h	two's comp.	FBh (-5 dec)	<7:0>	wake up threshold @ negative X -direction
yp	8	R/W	14h	two's comp.	5h (5 dec)	<7:0>	wake up threshold @ positive Y -direction
yn	8	R/W	15h	two's comp.	FBh (-5 dec)	<7:0>	wake up threshold @ negative Y -direction
Channel voltages (3)							
c4_neg <11:8>	4	R	16h	two's comp.	00h	<3:0> <7:4>	Voltage @ channel 4, negative current spinning Sign extended to 8 bit
c4_neg <7:0>	8	R	17h	two's comp.	00h	<7:0>	Voltage @ channel 4, negative current spinning
c4_pos <11:8>	4	R	18h	two's comp.	00h	<3:0> <7:4>	Voltage @ channel 4, positive current spinning Sign extended to 8 bit
c4_pos <7:0>	8	R	19h	two's comp.	00h	<7:0>	Voltage @ channel 4, positive current spinning
c3_neg <11:8>	4	R	1Ah	two's comp.	00h	<3:0> <7:4>	Voltage @ channel 3, negative current spinning Sign extended to 8 bit
c3_neg <7:0>	8	R	1Bh	two's comp.	00h	<7:0>	Voltage @ channel 3, negative current spinning
c3_pos <11:8>	4	R	1Ch	two's comp.	00h	<3:0> <7:4>	Voltage @ channel 3, positive current spinning Sign extended to 8 bit
c3_pos <7:0>	8	R	1Dh	two's comp.	00h	<7:0>	Voltage @ channel 3, positive current spinning
c2_neg <11:8>	4	R	1Eh	two's comp.	00h	<3:0> <7:4>	Voltage @ channel 2, negative current spinning Sign extended to 8 bit
c2_neg <7:0>	8	R	1Fh	two's comp.	00h	<7:0>	Voltage @ channel 2, negative current spinning
c2_pos <11:8>	4	R	20h	two's comp.	00h	<3:0> <7:4>	Voltage @ channel 2, positive current spinning Sign extended to 8 bit
c2_pos <7:0>	8	R	21h	two's comp.	00h	<7:0>	Voltage @ channel 2, positive current spinning
c1_neg <11:8>	4	R	22h	two's comp.	00h	<3:0> <7:4>	Voltage @ channel 1, negative current spinning Sign extended to 8 bit
c1_neg <7:0>	8	R	23h	two's comp.	00h	<7:0>	Voltage @ channel 1, negative current spinning
c1_pos <11:8>	4	R	24h	two's comp.	00h	<3:0> <7:4>	Voltage @ channel 1, positive current spinning Sign extended to 8 bit
c1_pos <7:0>	8	R	25h	two's comp.	00h	<7:0>	Voltage @ channel 1, positive current spinning
c5_neg <11:8>	4	R	26h	two's comp.	00h	<3:0> <7:4>	Voltage @ channel 5, negative current spinning Sign extended to 8 bit
c5_neg <7:0>	8	R	27h	two's comp.	00h	<7:0>	Voltage @ channel 5, negative current spinning
c5_pos <11:8>	4	R	28h	two's comp.	00h	<3:0> <7:4>	Voltage @ channel 5, positive current spinning Sign extended to 8 bit
c5_pos <7:0>	8	R	29h	two's comp.	00h	<7:0>	Voltage @ channel 5, positive current spinning

Table 6. Registers

Register	Number of bits	Access	Address	Format	Reset Value	Bit	Description
Hall Bias Currents							
AGC	8	RW	2Ah		00b 20h	<7:6> <5:0>	Not implemented (read 00b) 6 bit AGC value (if an AGC algorithm implemented in the µC)
Control Register for the Algorithm							
M_ctrl	8	R/W	2Bh		00h	<7:0>	Control register for the middle Hall element C5. If the register is zero the middle Hall element is not used for the XY calculation
J_ctrl	8	R/W	2Ch		06h	<7:0>	Control register for the sector dependent attenuation of the outer Hall elements
T_ctrl	8	R/W	2Dh		09h	<7:0>	Scale input to fit to the 8 Bit result register
Control_register_2							
Test	1	R/W	2Eh		1b	<7>	Test only, must be '1'
Test	1	R/W	2Eh		0b	<6>	Test only, must be '0'
Test	1	R/W	2Eh		0b	<5>	Test only, must be '0'
ext_clk_en	1	R/W	2Eh		0b	<4>	Test only, must be '0'
use_static_offset	1	R/W	2Eh		0b	<3>	Test only, must be '0'
EN_offset_comp	1	R/W	2Eh		1b	<2>	Test only, must be '1'
inv_spinning	1	R/W	2Eh		0b	<1>	Invert the channel voltage. Set to invert the magnet polarity
pptrim_en	1	R/W	2Eh		0b	<0>	Factory only, must be '0'

9 Package Drawings and Markings

The device is available in a 16-pin QFN (4x4x0.55mm) package.

Figure 19. Drawings and Dimensions

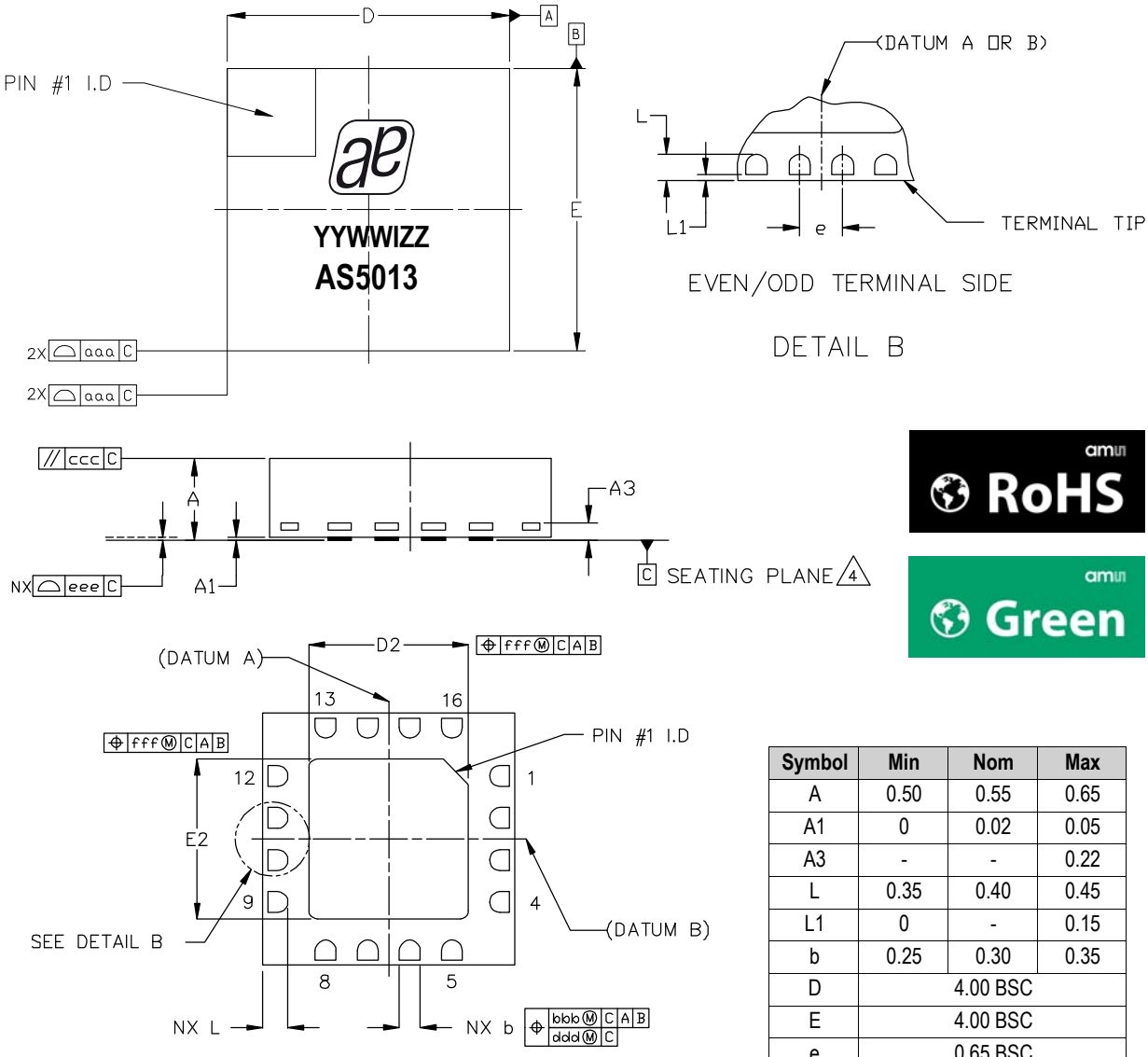

Notes:

1. Dimensions and tolerancing conform to *ASME Y14.5M-1994*.
2. All dimensions are in millimeters. Angles are in degrees.
3. Dimension b applies to metallized terminal and is measured between 0.25mm and 0.30mm from terminal tip. Dimension L1 represents terminal full back from package edge up to 0.15mm is acceptable.
4. Coplanarity applies to the exposed heat slug as well as the terminal.
5. Radius on terminal is optional.
6. N is the total number of terminals.

Symbol	Min	Nom	Max
A	0.50	0.55	0.65
A1	0	0.02	0.05
A3	-	-	0.22
L	0.35	0.40	0.45
L1	0	-	0.15
b	0.25	0.30	0.35
D		4.00 BSC	
E		4.00 BSC	
e		0.65 BSC	
D2	2.60	2.70	2.80
E2	2.60	2.70	2.80
aaa	-	0.15	-
bbb	-	0.10	-
ccc	-	0.10	-
ddd	-	0.05	-
eee	-	0.08	-
fff	-	0.10	-
N		16	

Marking: YYWWIZZ.

YY	WW	I	ZZ
Last two digits of the current year	Manufacturing Week	Assembly plant identifier	Assembly traceability code

9.1 Recommended Footprint

Figure 20. Footprint

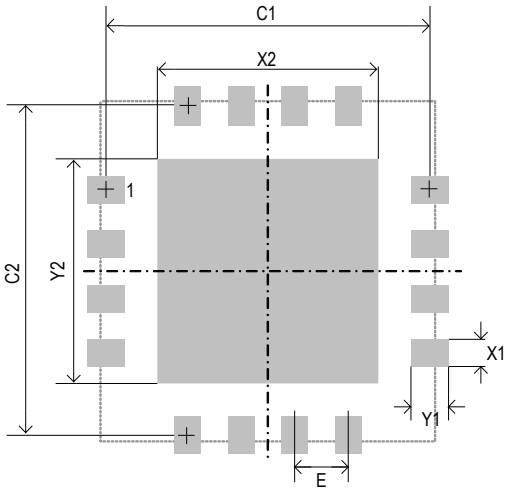

Recommended Footprint Data	
Symbol (mm)	**Typ**
C1	3.7
C2	3.7
E	0.65
X1	0.40
Y1	0.7
X2	2.6
Y2	2.6

9.2 Recommended Mounting

The typical mounting configuration of the AS5013 with the mechanics is on both sides of the PCB:

- Mechanics + Magnet on the top side
- AS5013 IC on the bottom side

A thickness of 0.3mm to 1.0mm for the PCB is recommended.

A dome switch for push button function can be added as well.

Figure 21. AS5013 Mounting Example for Low Profile Joystick

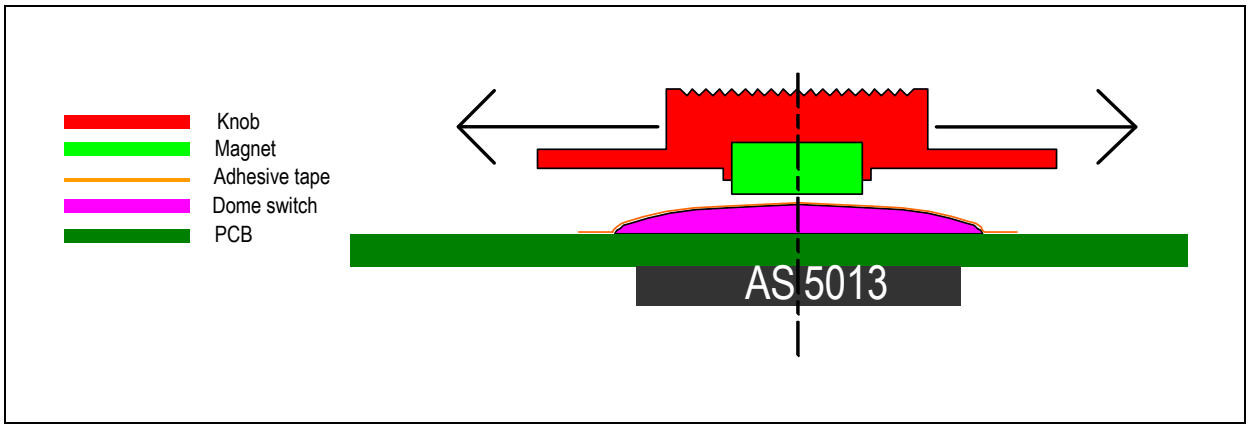

Figure 22. Layout Example for Low Profile Joystick

Bottom SIDE View (AS5013)

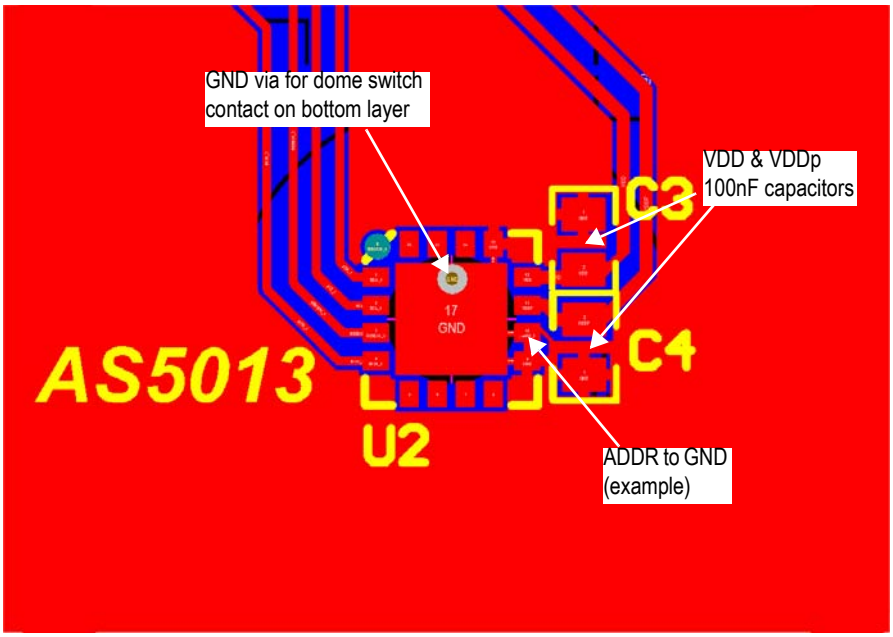

Top SIDE View (mechanics side)

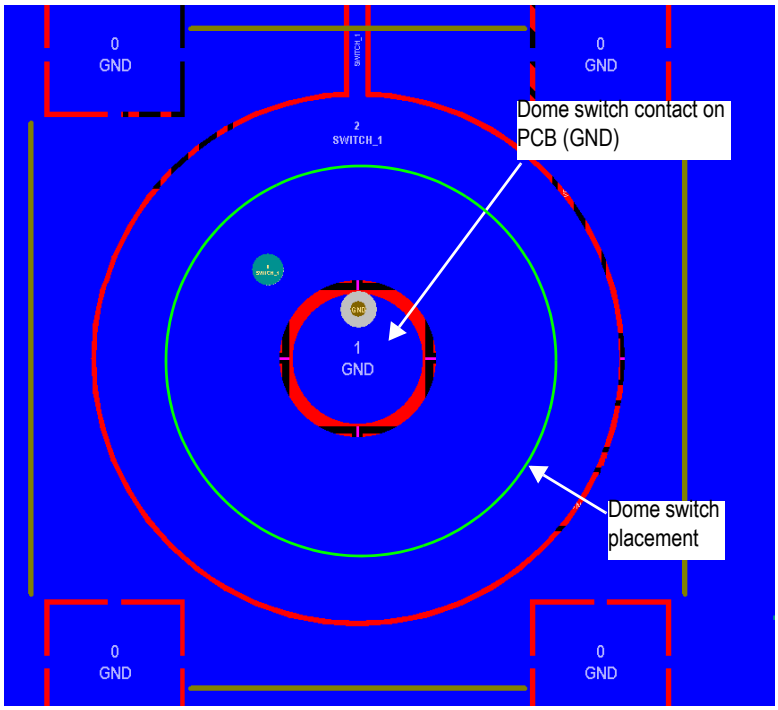

Revision History

Revision	Date	Owner	Description
0.2	06 Apr, 2010		Preliminary
1.0	15 Jun, 2010		Y_res_int ACK resets INTn, not STOP bit Bit Soft_rst description inverted (soft_rst = Normal mode) Control register 2 bit 7: always 1 and Test bits fixed to '0' Added PSSR and Noise values
1.1	02 Jul, 2010		Registers Initialization (refer to page 24) – step 5: Write 86h to Control register 2, for magnet polarity inversion
1.2	19 Jul, 2010		I²C Interface (refer to page 10) – I²C address inverted (40h and 41h for 1000 000 and 1000 001)
1.3	22 Jul, 2010		Added chapter Power ON (page 23)
1.4	16 Aug, 2010		Pin Assignments (page 3) and Absolute Maximum Ratings (page 4): ESD direct pad contact ±2kV
1.5	20 Sep, 2010		Updated I²C Timing diagrams
1.10	08 Jul, 2011		Updated the entire datasheet according to the latest specification
1.11	05 Jan, 2012	rph	Updated Figure 3 and Table 6

Note: Typos may not be explicitly mentioned under revision history.

10 Ordering Information

The devices are available as the standard products shown in Table 7.

Table 7. Ordering Information

Ordering Code	Description	Delivery Form	Package
AS5013-IQFT		Tape & Reel	16-pin QFN (4x4x0.55mm)

Note: All products are RoHS compliant and ams green.
Buy our products or get free samples online at www.ams.com/ICdirect

Technical Support is available at www.ams.com/Technical-Support

For further information and requests, email us at sales@ams.com
(or) find your local distributor at www.ams.com/distributor

Copyrights

Copyright © 1997-2012, ams AG, Tobelbaderstrasse 30, 8141 Unterpremstaetten, Austria-Europe. Trademarks Registered ®. All rights reserved. The material herein may not be reproduced, adapted, merged, translated, stored, or used without the prior written consent of the copyright owner.

All products and companies mentioned are trademarks or registered trademarks of their respective companies.

Disclaimer

Devices sold by ams AG are covered by the warranty and patent indemnification provisions appearing in its Term of Sale. ams AG makes no warranty, express, statutory, implied, or by description regarding the information set forth herein or regarding the freedom of the described devices from patent infringement. ams AG reserves the right to change specifications and prices at any time and without notice. Therefore, prior to designing this product into a system, it is necessary to check with ams AG for current information. This product is intended for use in normal commercial applications. Applications requiring extended temperature range, unusual environmental requirements, or high reliability applications, such as military, medical life-support or life-sustaining equipment are specifically not recommended without additional processing by ams AG for each application. For shipments of less than 100 parts the manufacturing flow might show deviations from the standard production flow, such as test flow or test location.

The information furnished here by ams AG is believed to be correct and accurate. However, ams AG shall not be liable to recipient or any third party for any damages, including but not limited to personal injury, property damage, loss of profits, loss of use, interruption of business or indirect, special, incidental or consequential damages, of any kind, in connection with or arising out of the furnishing, performance or use of the technical data herein. No obligation or liability to recipient or any third party shall arise or flow out of ams AG rendering of technical or other services.

Contact Information

Headquarters

ams AG
Tobelbaderstrasse 30
A-8141 Unterpremstaetten, Austria

Tel : +43 (0) 3136 500 0
Fax : +43 (0) 3136 525 01

For Sales Offices, Distributors and Representatives, please visit:
http://www.ams.com/contact