SERIES: 2.5~5 W multi-blade USB **DESCRIPTION: SWITCHING POWER SUPPLY**

FEATURES

- universal AC input
- regulated output voltage
- short circuit, over load protection
- meets EISA / efficiency level IV regulations
- custom designs available

RoHS

MODEL	output voltage	output current		output wattage	ripple*	efficiency level
	nominal (V dc)	min (A)	max (A)	max (W)	max. (mVp-p)	
EMS050050-I38-SZ	5	0	0.5	2.5	100	IV
EMS050100-I38-SZ	5	0	1	5	150	IV

*at full load, 100 ~ 240 V ac input

SERIES: 2.5~5 W multi-blade USB **DESCRIPTION: SWITCHING POWER SUPPLY**

INPUT

parameter	conditions/description	min	nom	max	units
rated input voltage		100		240	V ac
input voltage range		90		264	V ac
rated frequency		50		60	Hz
frequency range		47		63	Hz
rated input current	0.5 A model 1 A model			100 200	mA mA
inrush current	at 115 V ac, cool start at 230 V ac, cool start			15 30	A A
no load power consumption				0.3	W

OUTPUT

parameter	conditions/description	min	nom	max	units
line regulation			±1		%
load regulation			±5		%
over voltage protection	output voltage will be clamped by an internal protection zener				
short circuit protection	output shut down and auto restart				

SAFETY & EMI

parameter	conditions/description	min	nom	max	units
HI-POT	input to output at 10 mA for 1 minute			3000 4242	V ac V dc
insulation resistance	input to output at 500 V dc	100			MΩ
safety approvals	UL/cUL, GS, CE				
EMI standard	FCC class B, EN55022				
leakage current				0.25	mA
RoHS compliant	yes				

ENVIRONMENTAL

parameter	conditions/description	min	nom	max	units
operating temperature		0		40	˚C
operating humidity		20		80	%
storage temperature		-10		70	˚C
storage humidity		10		90	%

SERIES: 2.5~5 W multi-blade USB **DESCRIPTION: SWITCHING POWER SUPPLY**

MECHANICAL DRAWING

input plug	Interchangeable PIN (UL, VDE, UK, SAA)
case size	71 L x 41 W x 31.5 H mm

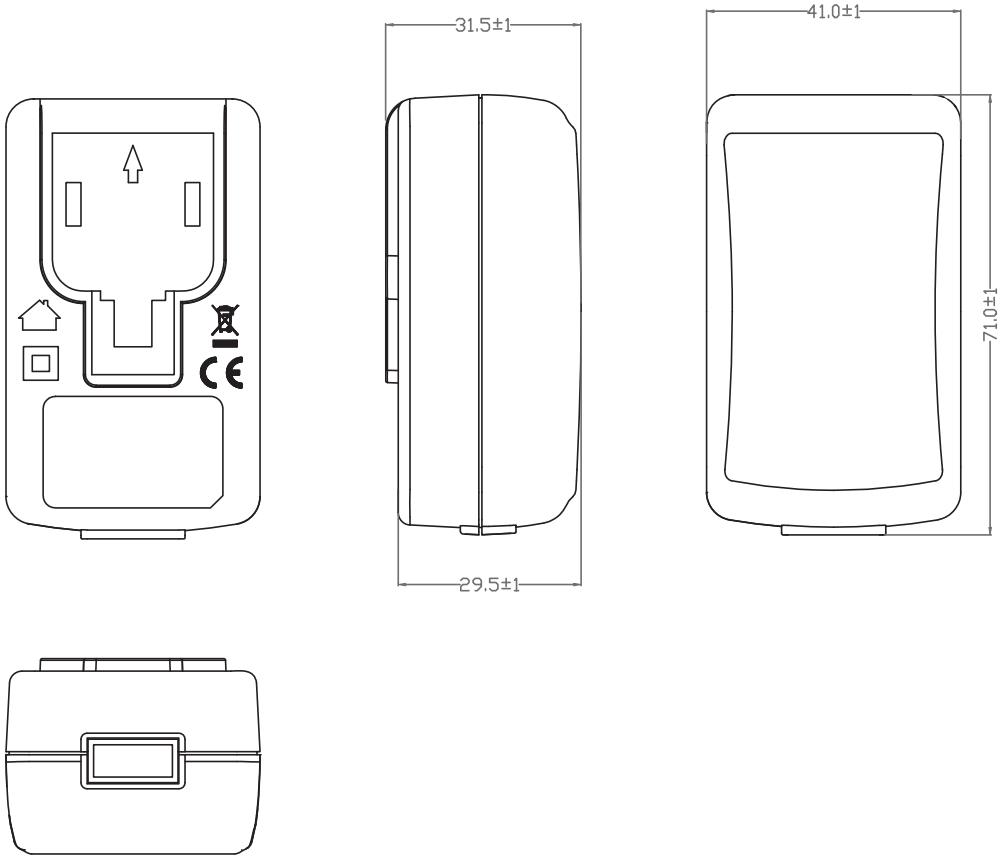

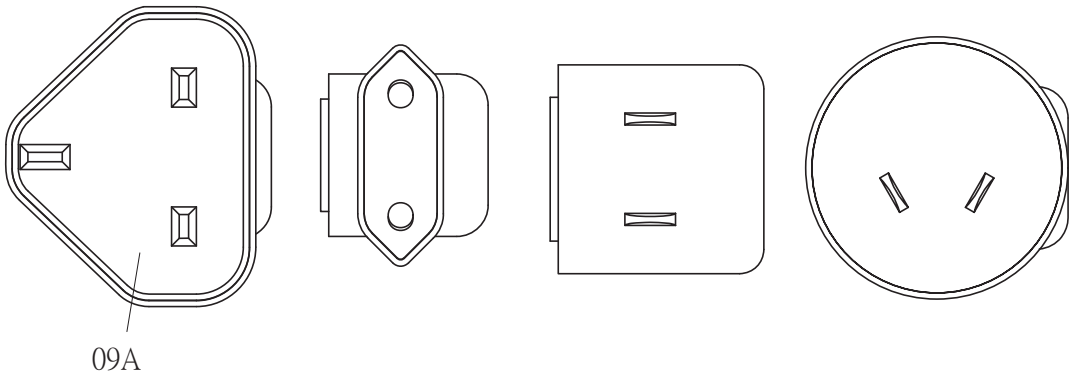

SERIES: 2.5~5 W multi-blade USB **DESCRIPTION: SWITCHING POWER SUPPLY**

INDIVIDUAL PACKAGING

tolerance	± 1 mm

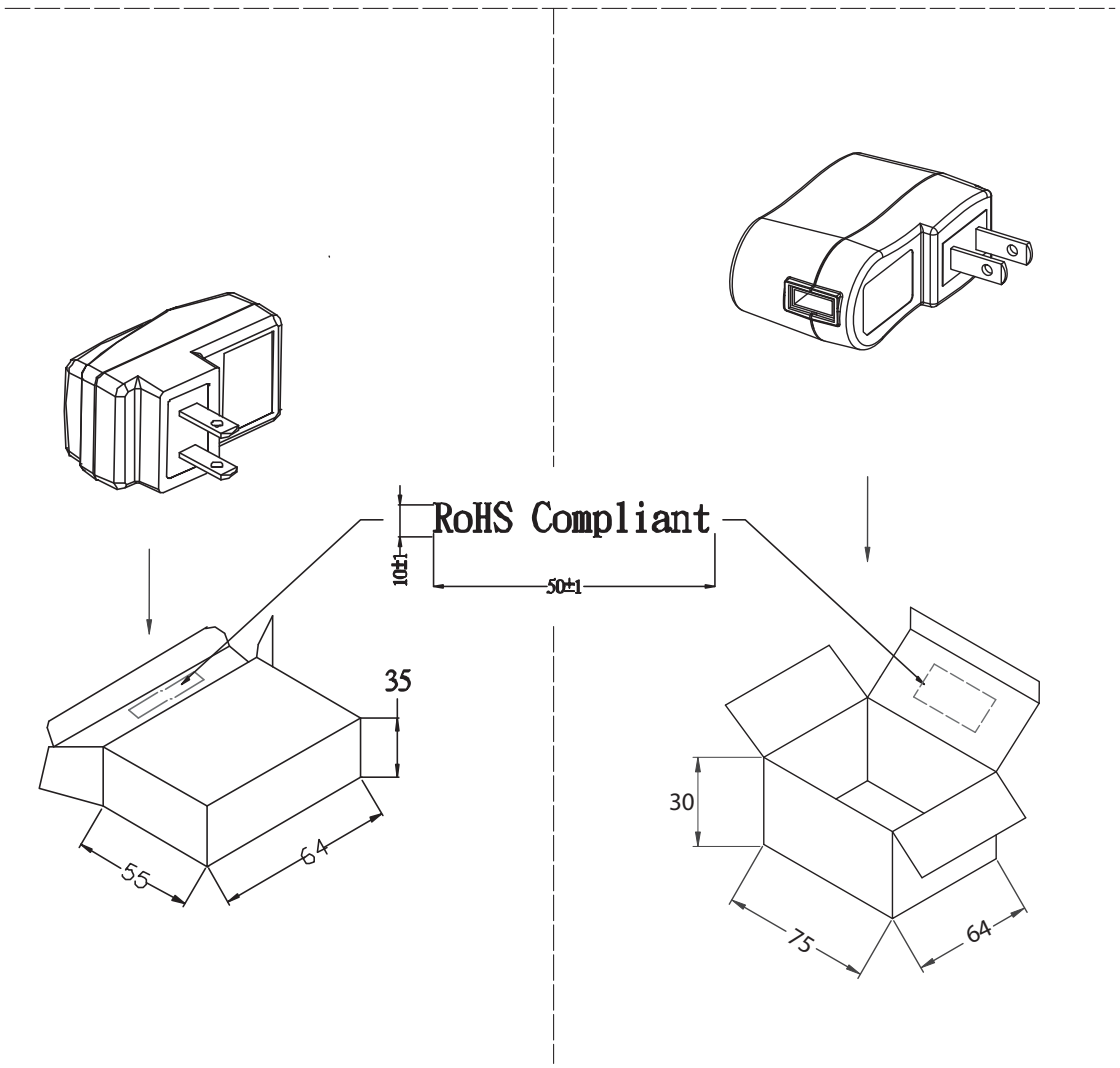

SERIES: 2.5~5 W multi-blade USB **DESCRIPTION: SWITCHING POWER SUPPLY**

PACKAGING

tolerance	+7 / -0 mm

CARTON SIZE: 347X302X175mm
Q'TY: 100pcs(25x4)
N.W: 5.5KGS
G.W: 6.3KGS
G.W: 6.8KGS

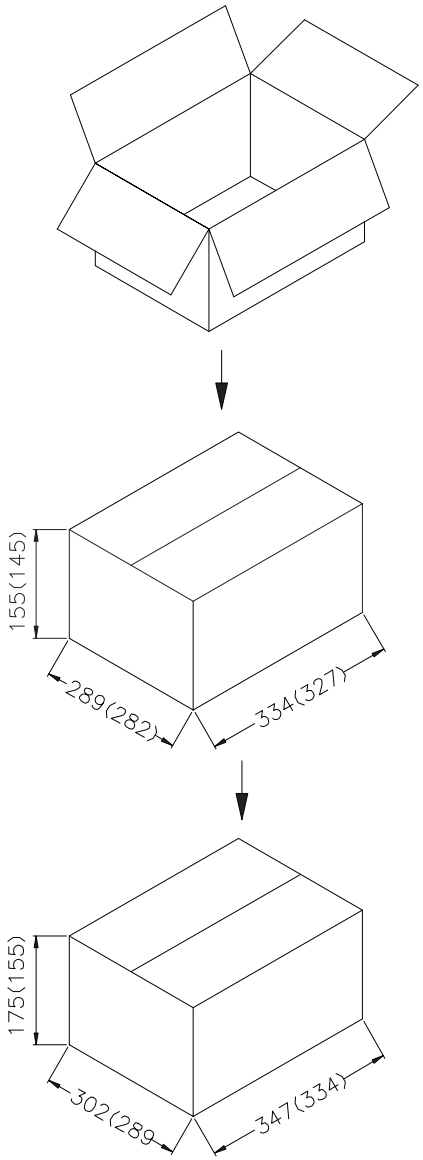
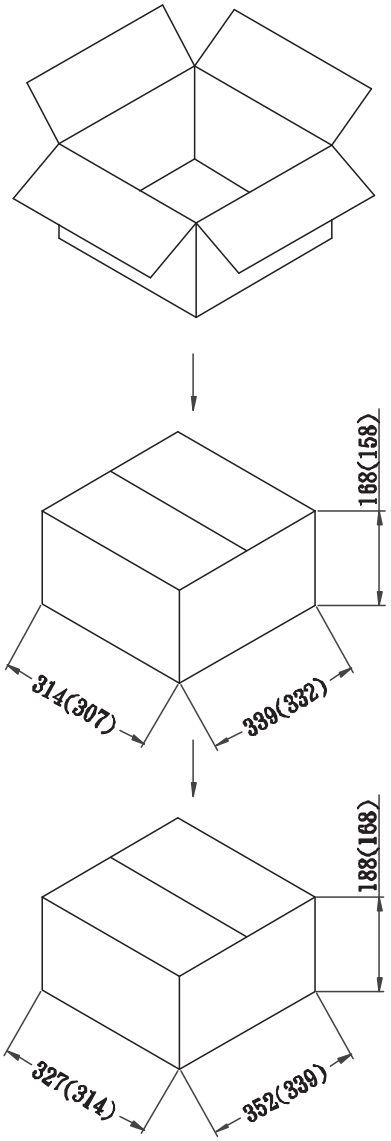
CARTON SIZE: 352*327*188mm
Q'TY: 100PCS(20*5)
N.W: 6.3KGS
G.W: 6.8KGS
G.W: 7.6KGS