MODEL: NDM2Z-50H | DESCRIPTION: AUTO COMPENSATED, DIGITAL DC-DC POL CONVERTER

GENERAL CHARACTERISTICS

- 4.5~14 V input range
- 0.6~3.3 V programmable output
- voltage tracking
- voltage margining
- active current sharing
- *Snapshot*™ parametric capture
- voltage/current/temperature monitoring
- synchronization and phase spreading
- remote differential voltage sense
- programmable soft start and soft stop
- fault management

FEATURES

- compact package
  horizontal:
  30.85 x 20.0 x 9.20 mm
  (1.215 x 0.787 x 0.362 in)
  vertical (SIP):
  33.0 x 7.6 x 18.1 mm
  (1.30 x 0.30 x 0.713 in)
- 50 A output
- high efficiency
- auto compensation
- SMBus interface
- PMBus™ Compatible
- Ericsson footprint compatible

novum advanced power

RoHS PMBus

MODEL	input voltage (Vdc)	output voltage (Vdc)	output current max (A)	output wattage max (W)
NDM2Z-50H	4.5~14	0.6~3.3	50	165

PART NUMBER KEY

NDM2Z-50H X - X X - XXX

- Base Number
- Pin Style: S = surface-mount, T = through-hole
- Pin Configuration: A = standard configuration
- Package Option: A = loose parts, B = tape and reel, C = tray
- Firmware Configuration: 000~ZZZ

Example part number: **NDM2Z-50HT-AA-002**

horizontal module
through-hole pins
standard pin configuration
loose parts package option
firmware configuration 002

CONTENTS

RECOMMENDED OPERATING CONDITIONS

-30°C < T_{P1} < +95°C, 4.5 V < V_{in} < 14 V, typical measurements made at V_{in} = 12 V, V_{out} = 1.0 V, I_{out} = I_{max}, T_{P1} = 25°C, C_{in} = 470 µF/10 mΩ, C_{out} = 470 µF/8 mΩ

INPUT / OUTPUT

parameter	conditions/description	min	typ	max	units
V_{in}	input supply voltage	4.5		14	V
I_{out}	output current	0		50	A
V_{out}	adjustable via resistor or PMBus™ commands	0.6		3.3	V
V_{out} margin	adjustable via PMBus commands	0		110	%
voltage accuracy	over line, load and temperature measured at +S and -S	-1		1	%
voltage set-point resolution	when V_{out} set via PMBus commands	-0.025		0.025	% FS
voltage ripple and noise	V_{out} = 0.6 V V_{out} = 1.0 V V_{out} = 1.8 V V_{out} = 3.3 V		7 10 16 25		mVp-p
ramp-up time	adjustable via PMBus commands	0		200	ms
on time delay	adjustable via PMBus commands	2		500,000	ms
load transient voltage deviation	I_{out}: 25%→75%→25% of I_{max}, dI/dt=2 A/µs V_{out} = 0.6 V V_{out} = 1.0 V V_{out} = 1.8 V V_{out} = 3.3 V		 230 230 230 210		mV
load transient recovery time[1]	I_{out}: 25%→75%→25% of I_{max}, dI/dt=2 A/µs V_{out} = 0.6 V V_{out} = 1.0 V V_{out} = 3.3 V V_{out} = 3.3 V		 80 60 50 25		µs

Notes: 1. settling to within 3% of V_{out}

POWER / EFFICIENCY

parameter	conditions/description		min	typ	max	units
output power	V_{out} = 3.3 V + 10% margin		0		181.5	W
efficiency	I_{out} = 50% of max	V_{out} = 0.6 V V_{out} = 1.0 V V_{out} = 1.8 V V_{out} = 3.3 V		86.4 90.7 93.6 95.2		%
	I_{out} = max	V_{out} = 0.6 V V_{out} = 1.0 V V_{out} = 1.8 V V_{out} = 3.3 V		79.1 85.4 90.1 92.9		%

POWER CONNECTIONS

symbol	pin	IO type	description
VIN	1A, 1B	Power	Input voltage
GND	2A, 2B	Ground	Power ground
VOUT	3A, 3B	Power	Output voltage

COMMUNICATION CONNECTIONS

symbol	pin	IO type	description
VTRK	4A	Analog	Voltage tracking input
PREF	4B	Ground	Pin-strap ground
+S	5A	Analog	Output voltage positive sense input
-S	5B	Analog	Output voltage negative sense input
SA0	6A	Digital	SMBus address pinstrap
DDC	6B	Digital	Digital-DC Communications bus (equivalent to Ericsson Power GCB)
SCL	7A	Digital	SMBus clock
SDA	7B	Digital	SMBus data
VSET	8A	Digital	Output voltage pin-strap
SYNC	8B	Digital	Synchronization I/O
SALRT	9A	Digital	SMBus alert
CTRL	9B	Digital	Remote control or enable
PG	10A	Digital	Power good
SA1	10B	Digital	SMBus address pinstrap

MECHANICAL DRAWING (THROUGH HOLE)

units: mm [inches]
tolerance unless specified:
X.X ±0.50 [0.02]
X.XX ±0.25 [0.01]
(not applied on footprint or typical values)

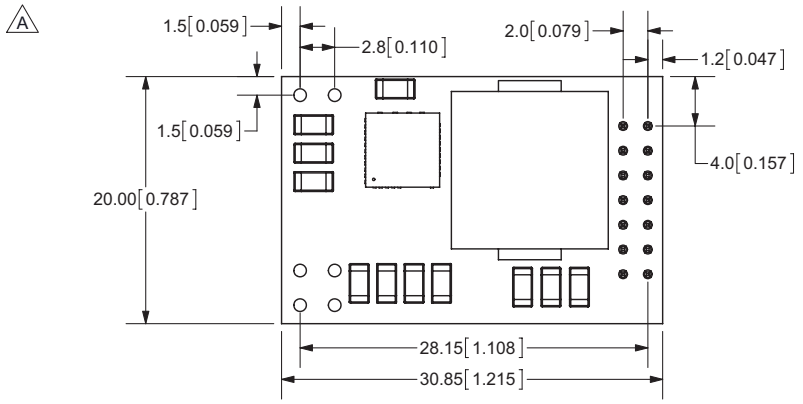

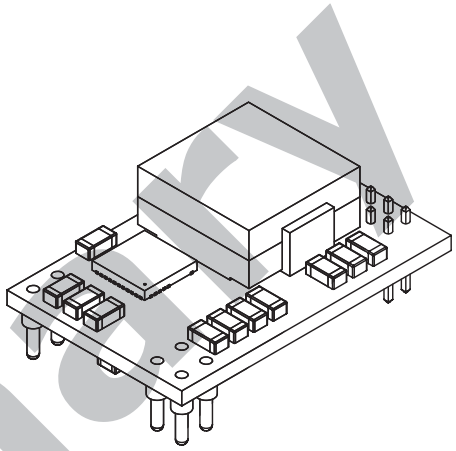

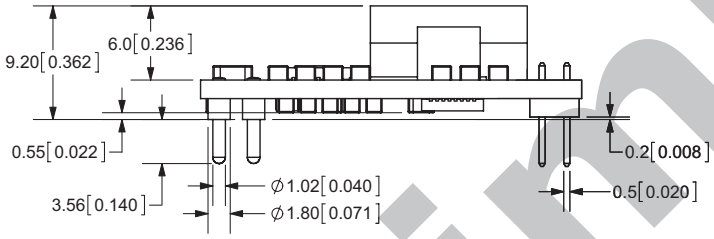

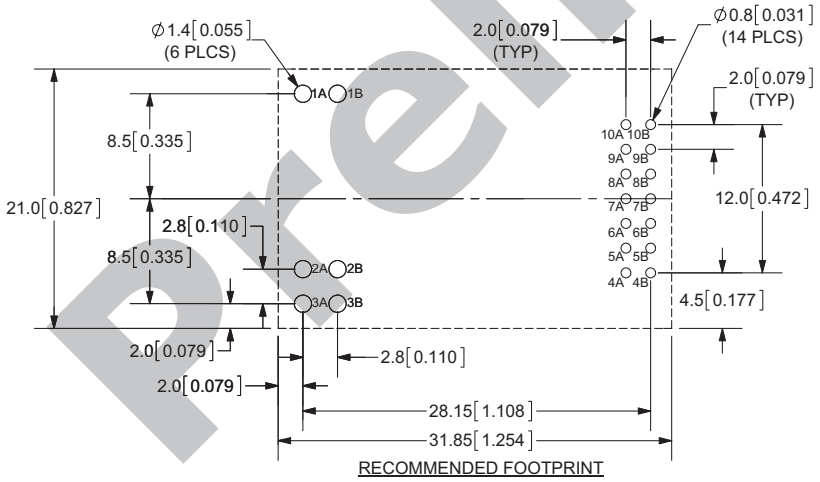

PIN NUMBER	PIN NAME	MATERIAL	PLATING
1A	VIN	Copper Alloy	Min Matte tin 8~12 μm over 2.5~5 μm Ni
1B	VIN		
2A	GND		
2B	GND		
3A	VOUT		
3B	VOUT		
4A	VTRK	Brass	Min Au 0.2 μm over 1.27 μm Ni
4B	PREF		
5A	+S		
5B	-S		
6A	SA0		
6B	DDC		
7A	SCL		
7B	SDA		
8A	VSET		
8B	SYNC		
9A	SALRT		
9B	CTRL		
10A	PG		
10B	SA1		

REVISION HISTORY

rev.	description	date
0.9	preliminary release	09/10/2012
0.91	misc. updates	09/25/2012
0.92	added mechanical drawing	12/07/2012
0.93	pin label update	12/20/2012

The revision history provided is for informational purposes only and is believed to be accurate.

CUI INC®

Headquarters
20050 SW 112th Ave.
Tualatin, OR 97062
800.275.4899

Fax 503.612.2383
cui.com
techsupport@cui.com