DATA SHEET

74F3038

Quad 2-input NAND 30 Ω line driver (open collector)

Product specification
Supersedes data of 1990 Jan 29
IC15 Data Handbook

1998 May 21

Philips Semiconductors

PHILIPS

Quad 2-input NAND 30Ω line driver (open collector) 74F3038

FEATURES

- 30Ω line driver
- 160mA output drive capability
- High speed
- Facilitates incident wave switching
- 3nh lead inductance each on V_{CC} and GND when both side pins are used

DESCRIPTION

The 74F3038 is a high current Open-Collector Line Driver composed of four 2-input NAND gates. It has been designed to deal with the transmission line effects of PC boards which appear when fast edge rates are used.

The 74F3038 can sink 160mA with a V_{CC} as low as 4.5V. This guarantees incident wave switching with V_{OL} not more than 0.8V while driving impedances as low as 30Ω. This is applicable with any combination of outputs using continuous duty.

The AC specifications for the 74F3038 were determined using the standard FAST load for open-collector parts of 50pF capacitance, a 500Ω pull-up resistor and a 500Ω pull-down resistor. (See Test Circuit).

Reducing the load resistors to 100Ω will decrease the t_{PLH} propagation delay by approximately 50% while increasing t_{PHL} only slightly. The graph of typical propagation delay versus load resistor (see AC Characteristics section for Graph) shows a spline fit curve from four measured data points, R_L = 30Ω, R_L = 100Ω, R_L = 300Ω, and R_L = 500Ω.

PIN CONFIGURATION

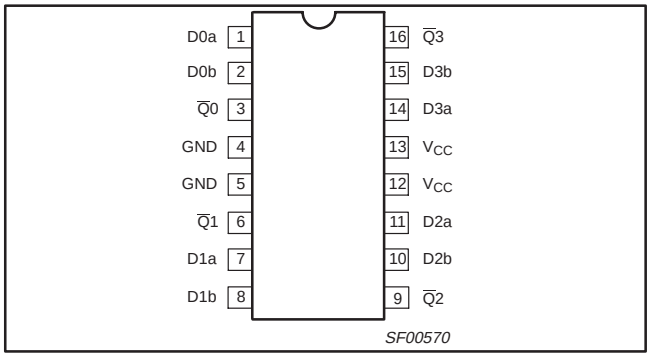

TYPE	TYPICAL PROPAGATION DELAY	TYPICAL SUPPLY CURRENT (TOTAL)
74F3038	6.0ns	17mA

ORDERING INFORMATION

DESCRIPTION	COMMERCIAL RANGE V_{CC} = 5V ±10%, T_{amb} = 0°C to +70°C	PACKAGE DRAWING NUMBER
16-pin Plastic DIP	N74F3038N	SOT38-4
16-pin Plastic SOL	N74F3038D	SOT162-1

INPUT AND OUTPUT LOADING AND FAN-OUT TABLE

PINS	DESCRIPTION	74F(U.L.) HIGH/LOW	LOAD VALUE HIGH/LOW
Dna, Dnb	Data inputs	1.0/1.0	20µA/0.6mA
Q̄n	Data outputs	OC/266	OC/160mA

NOTE: One (1.0) FAST unit load is defined as: 20µA in the High state and 0.6mA in the Low state. OC = Open Collector.

LOGIC SYMBOL

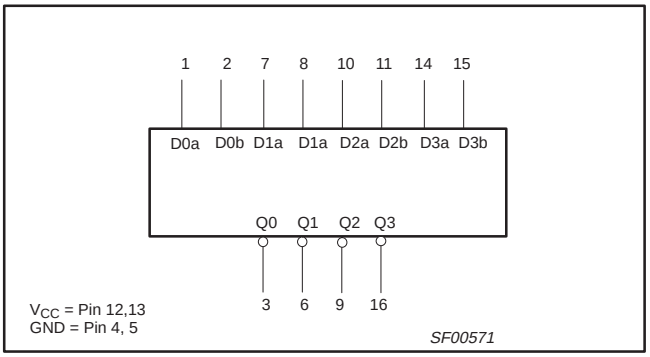

IEC/IEEE SYMBOL

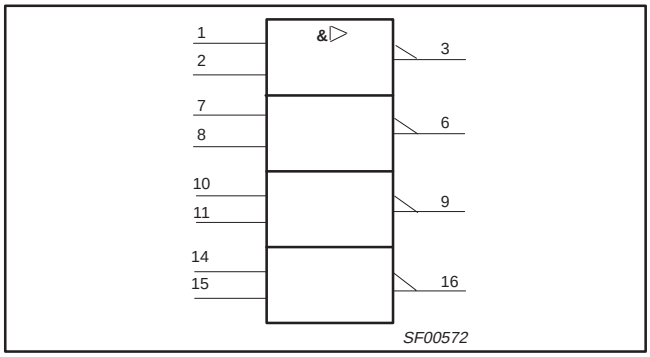

LOGIC DIAGRAM

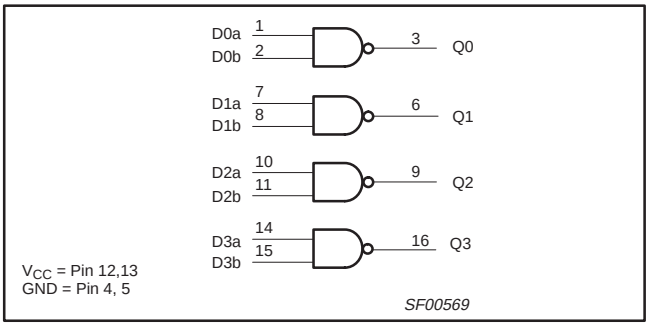

FUNCTION TABLE

INPUTS		OUTPUT
Dna	**Dnb**	**$\overline{Q}$n**
L	L	H
L	H	H
H	L	H
H	H	L

H = High voltage level
L = Low voltage level

ABSOLUTE MAXIMUM RATINGS

(Operation beyond the limits set forth in this table may impair the useful life of the device.
Unless otherwise noted these limits are over the operating free-air temperature range.)

SYMBOL	PARAMETER	RATING	UNIT
V_{CC}	Supply voltage	–0.5 to +7.0	V
V_{IN}	Input voltage	–0.5 to +7.0	V
I_{IN}	Input current	–30 to +5	mA
V_{OUT}	Voltage applied to output in High output state	–0.5 to V_{CC}	V
I_{OUT}	Current applied to output in Low output state	320	mA
T_{amb}	Operating free-air temperature range	0 to +70	°C
T_{stg}	Storage temperature range	–65 to +150	°C

RECOMMENDED OPERATING CONDITIONS

SYMBOL	PARAMETER	LIMITS			UNIT
		MIN	NOM	MAX	
V_{CC}	Supply voltage	4.5	5.0	5.5	V
V_{IH}	High-level input voltage	2.0			V
V_{IL}	Low-level input voltage			0.8	V
I_{IK}	Input clamp current			–18	mA
V_{OH}	High-level output voltage			4.5	V
I_{OL}	Low-level output current			160	mA
T_{amb}	Operating free-air temperature range	0		+70	°C

DC ELECTRICAL CHARACTERISTICS

(Over recommended operating free-air temperature range unless otherwise noted.)

SYMBOL	PARAMETER		TEST CONDITIONS[1]			LIMITS			UNIT
						MIN	TYP[2]	MAX	
I_{OH}	High-level output current		V_{CC} = MIN, V_{IL} = MAX, V_{IH} = MIN, V_{OH} = MAX					250	μA
V_{OL}	Low-level output current		V_{CC} = MIN, V_{IL} = MAX, V_{IH} = MIN	I_{OL} = 100mA	±10% V_{CC}		0.42	0.55	V
				I_{OL} = 160mA[3]	±5% V_{CC}			0.80	V
V_{IK}	Input clamp voltage		V_{CC} = MIN, I_I = I_{IK}				–0.73	–1.2	V
I_I	Input current at maximum input voltage		V_{CC} = MAX, V_I = 7.0V					100	μA
I_{IH}	High-level input current		V_{CC} = MAX, V_I = 2.7V					20	μA
I_{IL}	Low-level input current		V_{CC} = MAX, V_I = 0.5V					–0.6	mA
I_{CC}	Supply current (total)	I_{CCH}	V_{CC} = MAX		V_{IN} = GND		3.5	6.0	mA
		I_{CCL}			V_{IN} = 4.5V		30	40	mA

NOTES:
1. For conditions shown as MIN or MAX, use the appropriate value specified under recommended operating conditions for the applicable type.
2. All typical values are at V_{CC} = 5V, T_{amb} = 25°C.
3. I_{OL1} is the current necessary to guarantee the High to Low transition in a 30Ω transmission line on the incident wave.

AC ELECTRICAL CHARACTERISTICS

SYMBOL	PARAMETER	TEST CONDITION	LIMITS					UNIT
			T_{amb} = +25°C, V_{CC} = +5.0V, C_L = 50pF, R_L = 500Ω			T_{amb} = 0°C to +70°C, V_{CC} = +5.0V ± 10%, C_L = 50pF, R_L = 500Ω		
			MIN	TYP	MAX	MIN	MAX	
t_{PLH} t_{PHL}	Propagation delay Dna, Dnb to $\overline{Q}$n	Waveform 1	6.0 1.0	8.5 2.0	11.5 5.0	6.0 1.0	12.0 5.0	ns

AC WAVEFORMS

For all waveforms, V_M = 1.5V.

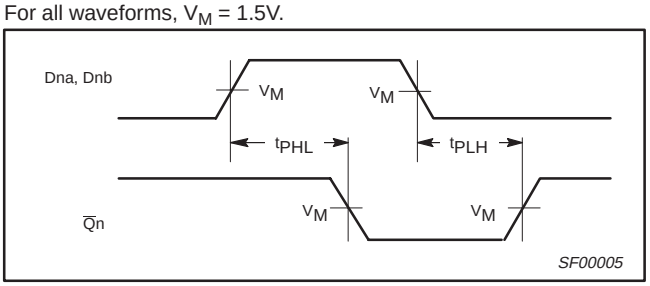

Waveform 1. Propagation Delay for Inputs to Output

TYPICAL PROPAGATION DELAYS VERSUS LOAD FOR OPEN COLLECTOR OUTPUTS

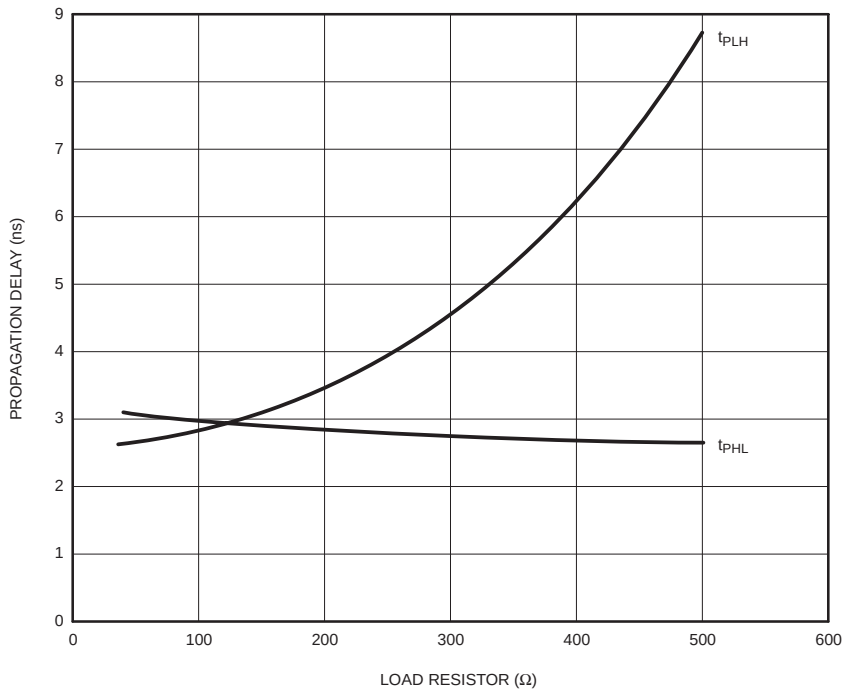

NOTE:
When using Open-Collector parts, the value of the pull-up resistor greatly affects the value of the t_{PLH}. For example, changing the specified pull-up resistor value from 500Ω to 100Ω will improve the t_{PLH} up to 50% with only a slight increase in the t_{PHL}. However, if the value of the pull-up resistor is changed, the user must make certain that the total I_{OL} current through the resistor and the total I_{IL}s of the receivers does not exceed the I_{OL} maximum specification.

SF01361

TEST CIRCUIT AND WAVEFORMS

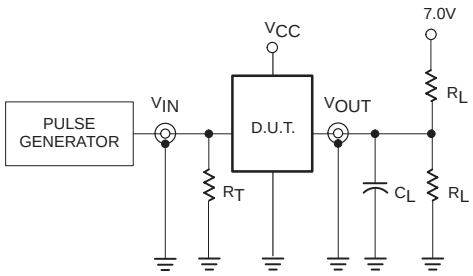

Test Circuit for Open Collector Outputs

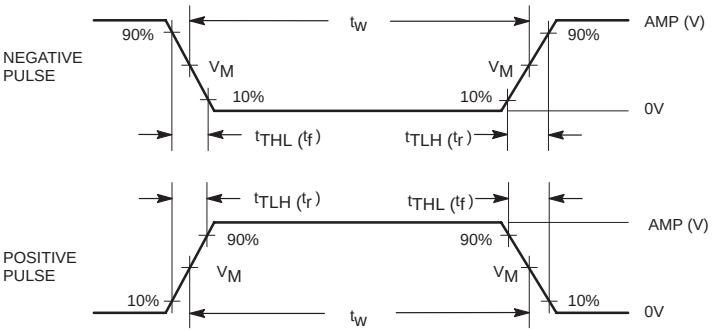

Input Pulse Definition

DEFINITIONS:

R_L = Load resistor; see AC electrical characteristics for value.

C_L = Load capacitance includes jig and probe capacitance; see AC electrical characteristics for value.

R_T = Termination resistance should be equal to Z_{OUT} of pulse generators.

family	INPUT PULSE REQUIREMENTS					
	amplitude	V_M	rep. rate	t_w	t_{TLH}	t_{THL}
74F	3.0V	1.5V	1MHz	500ns	2.5ns	2.5ns

SF00027

DIP16: plastic dual in-line package; 16 leads (300 mil) **SOT38-4**

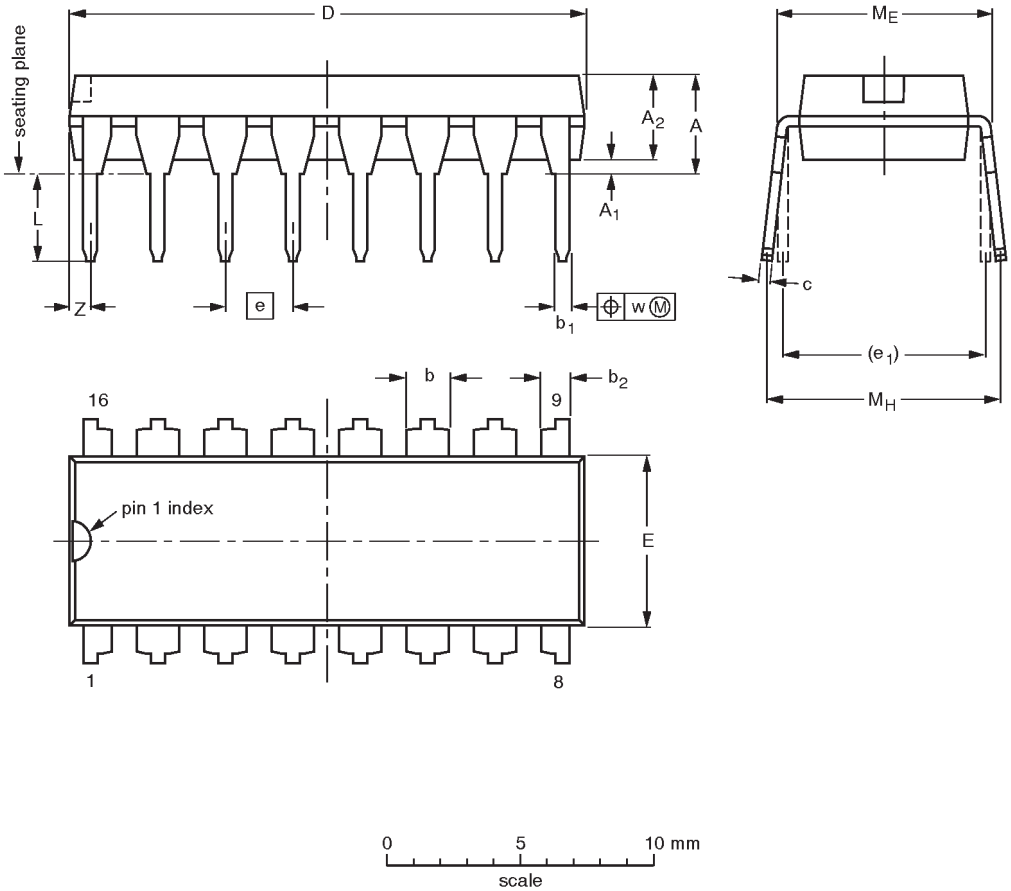

DIMENSIONS (inch dimensions are derived from the original mm dimensions)

UNIT	A max.	A_1 min.	A_2 max.	b	b_1	b_2	c	D (1)	E (1)	e	e_1	L	M_E	M_H	w	Z (1) max.
mm	4.2	0.51	3.2	1.73 1.30	0.53 0.38	1.25 0.85	0.36 0.23	19.50 18.55	6.48 6.20	2.54	7.62	3.60 3.05	8.25 7.80	10.0 8.3	0.254	0.76
inches	0.17	0.020	0.13	0.068 0.051	0.021 0.015	0.049 0.033	0.014 0.009	0.77 0.73	0.26 0.24	0.10	0.30	0.14 0.12	0.32 0.31	0.39 0.33	0.01	0.030

Note

1. Plastic or metal protrusions of 0.25 mm maximum per side are not included.

OUTLINE VERSION	REFERENCES				EUROPEAN PROJECTION	ISSUE DATE
	IEC	JEDEC	EIAJ			
SOT38-4						~~92-11-17~~ 95-01-14

SO16: plastic small outline package; 16 leads; body width 7.5 mm **SOT162-1**

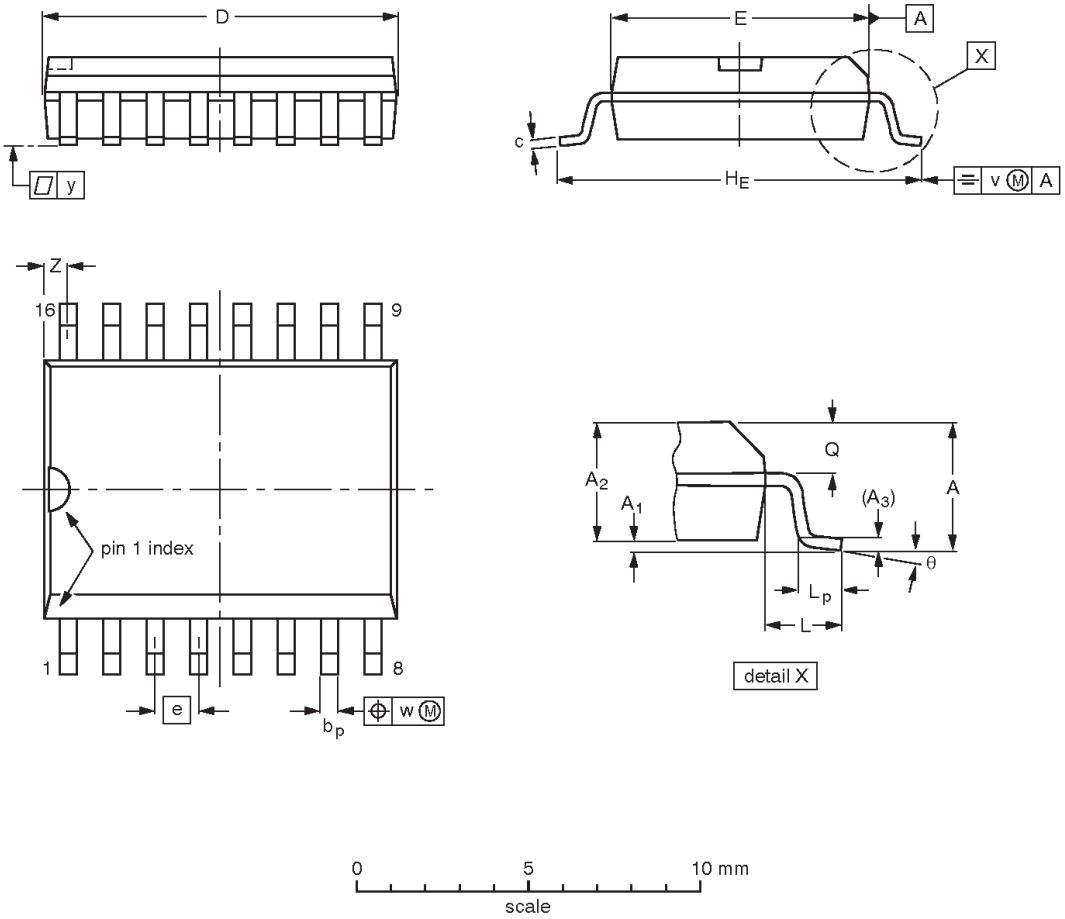

DIMENSIONS (inch dimensions are derived from the original mm dimensions)

UNIT	A max.	A_1	A_2	A_3	b_p	c	D (1)	E (1)	e	H_E	L	L_p	Q	v	w	y	Z (1)	θ
mm	2.65	0.30 0.10	2.45 2.25	0.25	0.49 0.36	0.32 0.23	10.5 10.1	7.6 7.4	1.27	10.65 10.00	1.4	1.1 0.4	1.1 1.0	0.25	0.25	0.1	0.9 0.4	8° 0°
inches	0.10	0.012 0.004	0.096 0.089	0.01	0.019 0.014	0.013 0.009	0.41 0.40	0.30 0.29	0.050	0.419 0.394	0.055	0.043 0.016	0.043 0.039	0.01	0.01	0.004	0.035 0.016	

Note

1. Plastic or metal protrusions of 0.15 mm maximum per side are not included.

OUTLINE VERSION	REFERENCES				EUROPEAN PROJECTION	ISSUE DATE
	IEC	JEDEC	EIAJ			
SOT162-1	075E03	MS-013AA				~~95-01-24~~ 97-05-22

Data sheet status

Data sheet status	Product status	Definition [1]
Objective specification	Development	This data sheet contains the design target or goal specifications for product development. Specification may change in any manner without notice.
Preliminary specification	Qualification	This data sheet contains preliminary data, and supplementary data will be published at a later date. Philips Semiconductors reserves the right to make chages at any time without notice in order to improve design and supply the best possible product.
Product specification	Production	This data sheet contains final specifications. Philips Semiconductors reserves the right to make changes at any time without notice in order to improve design and supply the best possible product.

[1] Please consult the most recently issued datasheet before initiating or completing a design.

Definitions

Short-form specification — The data in a short-form specification is extracted from a full data sheet with the same type number and title. For detailed information see the relevant data sheet or data handbook.

Limiting values definition — Limiting values given are in accordance with the Absolute Maximum Rating System (IEC 134). Stress above one or more of the limiting values may cause permanent damage to the device. These are stress ratings only and operation of the device at these or at any other conditions above those given in the Characteristics sections of the specification is not implied. Exposure to limiting values for extended periods may affect device reliability.

Application information — Applications that are described herein for any of these products are for illustrative purposes only. Philips Semiconductors make no representation or warranty that such applications will be suitable for the specified use without further testing or modification.

Disclaimers

Life support — These products are not designed for use in life support appliances, devices or systems where malfunction of these products can reasonably be expected to result in personal injury. Philips Semiconductors customers using or selling these products for use in such applications do so at their own risk and agree to fully indemnify Philips Semiconductors for any damages resulting from such application.

Right to make changes — Philips Semiconductors reserves the right to make changes, without notice, in the products, including circuits, standard cells, and/or software, described or contained herein in order to improve design and/or performance. Philips Semiconductors assumes no responsibility or liability for the use of any of these products, conveys no license or title under any patent, copyright, or mask work right to these products, and makes no representations or warranties that these products are free from patent, copyright, or mask work right infringement, unless otherwise specified.

Philips Semiconductors
811 East Arques Avenue
P.O. Box 3409
Sunnyvale, California 94088–3409
Telephone 800-234-7381

print code Date of release: 05-96

Document order number: 9397-750-05204