Data Sheet March 24, 2008

System on a Chip, Dual Channel Wide Voltage Pin Electronics Solution

Get Full Datasheet

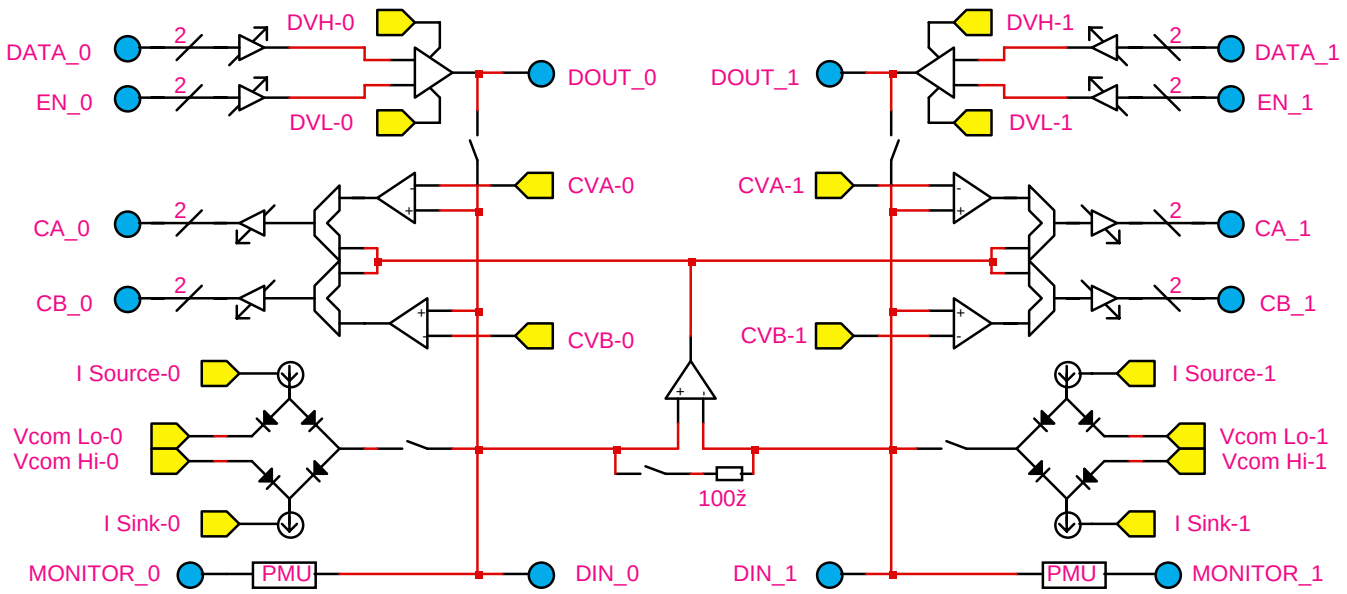

Pin Electronics Driver
- 75 MHz Fmax
- 2 Level Driver (DVH / DVL)
- DC Level Generators On Chip
- 24V Driver Output Swings
- Adjustable Output Voltage Range (-15V to +24V)
- Programmable Slew Rates (1 V/ns to .1 V/ns)
- Iout = 200 mA (DC)
- Extremely Low Leakage Over the operating Range

Pin Electronics Comparator
- Threshold Level Generators On Chip
- Extremely Low Leakage over a 32V Range
- 32V Comparator Input Compliance Range
- Differential Comparator

Load
- 24 mA Source / Sink Capability
- Split Load Configuration
- Resistive Load Capability

Deskew
- Propagation Delay Adjustment
- Falling Edge Adjustment
- Delay Range set by PLL Clock

PMU
- 5 Current Ranges
  (20 µA, 200 µA, 2 mA, 20 mA, 200 mA)
- FV / MI
- FI / MV
- Imax = 200 mA

On Chip DC Levels
- 10 Levels / Channel; 16-Bit Levels
- 16-Bit Gain and 16-Bit Offset Correction / Level
- DUT Ground Sensing and Correction

3 Bit Serial CPU Port
- 2 Control Bits per Channel (for Ext Relay Support)

Flexible Real Time Digital Inputs and Outputs
- 50 Ohm Series Terminations for Comparator Outputs
- Selectable On-Chip Terminations for Inputs

Package
- Lead Free
- 128 Lead, 14 mm X 20 mm, MQFP w/ Heat Slug
- Pdq < 1.5 Watts / Channel; Pdq < 3.0 Watts / Chip

Data Sheet Status	Revision Date
Engineering Sample	11 / 21 / 07

1-888-INTERSIL or 1-888-468-3774 | Intersil (and design) is a registered trademark of Intersil Americas Inc.
Copyright © Intersil Americas Inc. 2008. All Rights Reserved
All other trademarks mentioned are the property of their respective owners