System on a Chip, 50 MHz Octal Pin Electronics w/ PMU

Get Full Datasheet

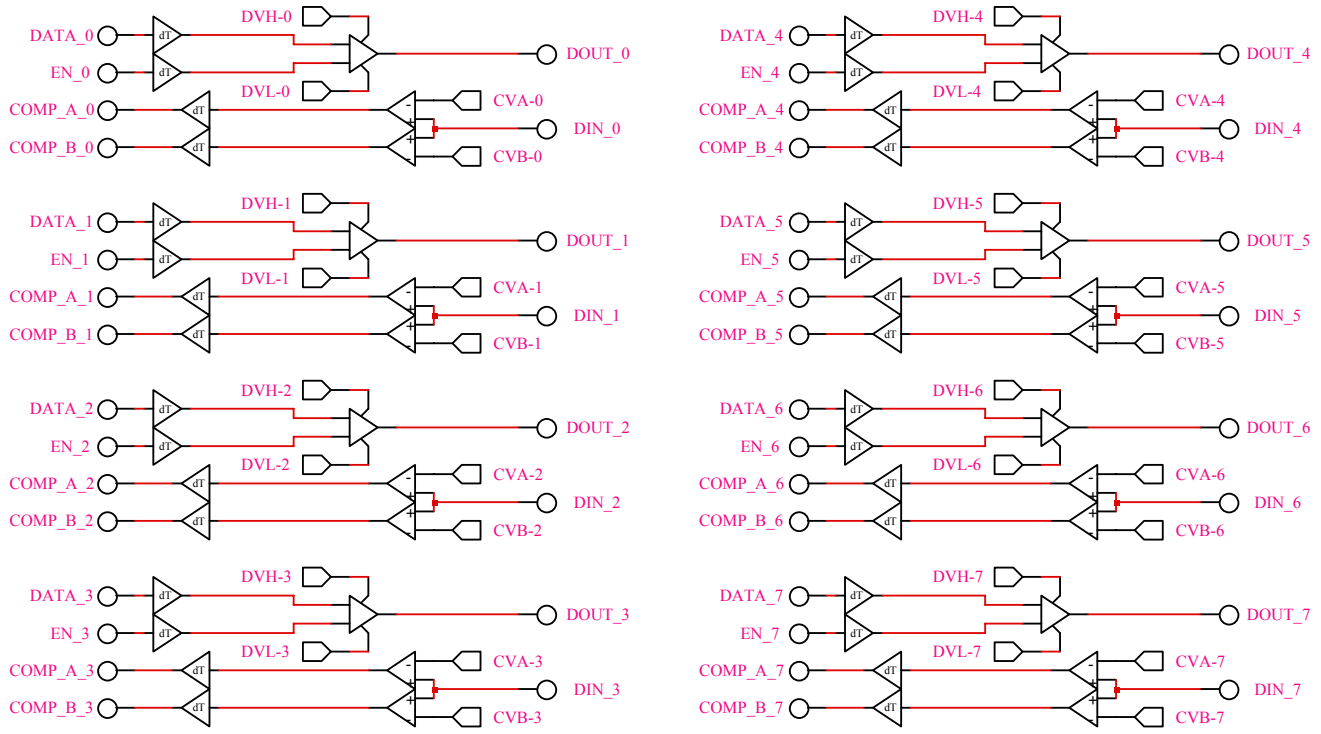

50 MHz
10 ns Minimum Pulse Width

Pin Electronics Driver
- 2 Level Driver w/ On Chip Buffers
- 8V Driver Output Swings
- Extremely Low Leakage over a 16V HiZ Range

Pin Electronics Comparator
- Extremely Low Leakage over a 16V Input Range
- 16V Comparator Input Voltage Range

Per Chip PMU
- FV, FI, MV, MI
- 8 Current Ranges
  (32 mA, 8 mA, 2 mA, 512 µA, 128 µA, 32 µA, 8 µA, 2 µA)
- 12V Super Voltage Capability

Deskew
- Propagation Delay Adjustment (up to 20 ns range)
- Falling Edge Adjustment (up to ±5 ns range)
- Auto Calibration via PLL

On Chip DC Levels
- 4 Levels / Channel
- 8 Levels / Central PMU
- 16 Bits per Level
- 16 Bit per Level Offset Correction
- 16 Bit per level Gain Correction

3 Bit Serial CPU Port
- Load Internal Registers and Memory
- Read Back Internal States

Flexible Digital Inputs and Outputs
- Adjustable threshold for high speed inputs
- 50Ω / 100Ω input termination options
- 50Ω series terminated high speed comparator outputs

Package / Power Dissipation
- 128 Lead, 14 mm X 20 mm, MQFP w/ Heat Slug
- Pdq ≤ 500 mW / Channel; Pdq ≤ 4.0W / Chip

Product Status	Revision Date
Production	11 / 20 / 07

1-888-INTERSIL or 1-888-468-3774 | Intersil (and design) is a registered trademark of Intersil Americas Inc.
Copyright © Intersil Americas Inc. 2008. All Rights Reserved
All other trademarks mentioned are the property of their respective owners