74HC2G66; 74HCT2G66

Dual single-pole single-throw analog switch

Rev. 10 — 3 October 2013 Product data sheet

1. General description

The 74HC2G66; 74HCT2G66 is a dual single pole, single-throw analog switch. Each switch has two input/output terminals (nY and nZ) and a digital enable input (nE). When nE is LOW, the analog switch is turned off. Inputs include clamp diodes. This enables the use of current limiting resistors to interface inputs to voltages in excess of V_{CC}.

2. Features and benefits

- Wide supply voltage range from 2.0 V to 10.0 V for 74HC2G66
- Very low ON resistance:
  - 41 Ω (typ.) at V_{CC} = 4.5 V
  - 30 Ω (typ.) at V_{CC} = 6.0 V
  - 21 Ω (typ.) at V_{CC} = 9.0 V
- High noise immunity
- Low power dissipation
- 25 mA continuous switch current
- Multiple package options
- ESD protection:
  - HBM JESD22-A114F exceeds 2000 V
  - MM JESD22-A115-A exceeds 200 V
- Specified from –40 °C to +85 °C and –40 °C to +125 °C

3. Ordering information

Table 1. Ordering information

Type number	Package			
	Temperature range	Name	Description	Version
74HC2G66DP	–40 °C to +125 °C	TSSOP8	plastic thin shrink small outline package; 8 leads; body width 3 mm; lead length 0.5 mm	SOT505-2
74HCT2G66DP				
74HC2G66DC	–40 °C to +125 °C	VSSOP8	plastic very thin shrink small outline package; 8 leads; body width 2.3 mm	SOT765-1
74HCT2G66DC				
74HC2G66GT	–40 °C to +125 °C	XSON8	plastic extremely thin small outline package; no leads; 8 terminals; body 1 × 1.95 × 0.5 mm	SOT833-1
74HCT2G66GT				
74HC2G66GD	–40 °C to +125 °C	XSON8	plastic extremely thin small outline package; no leads; 8 terminals; body 3 × 2 × 0.5 mm	SOT996-2
74HCT2G66GD				

4. Marking

Table 2. Marking codes

Type number	Marking[1]
74HC2G66DP	H66
74HCT2G66DP	T66
74HC2G66DC	H66
74HCT2G66DC	T66
74HC2G66GT	H66
74HCT2G66GT	T66
74HC2G66GD	H66
74HCT2G66GD	T66

[1] The pin 1 indicator is located on the lower left corner of the device, below the marking code.

5. Functional diagram

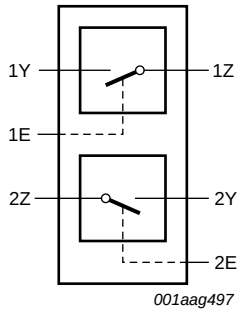

Fig 1. Logic symbol

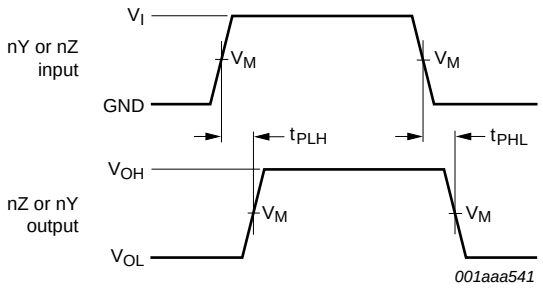

Fig 2. Logic diagram for 1 switch

All information provided in this document is subject to legal disclaimers.

© NXP B.V. 2013. All rights reserved.

6. Pinning information

6.1 Pinning

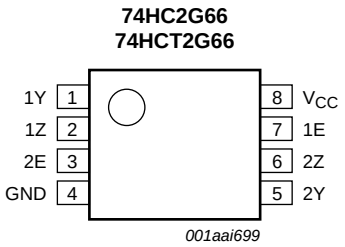

Fig 3. Pin configuration SOT505-2 (TSSOP8) and SOT765-1 (VSSOP8)

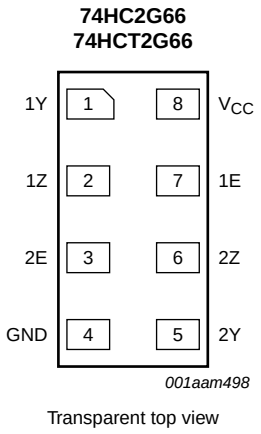

Fig 4. Pin configuration SOT833-1 (XSON8)

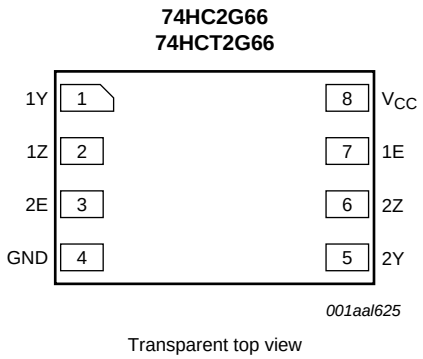

Fig 5. Pin configuration SOT996-2 (XSON8)

6.2 Pin description

Table 3. Pin description

Symbol	Pin	Description
1Y, 2Y	1, 5	independent input or output
1Z, 2Z	2, 6	independent input or output
GND	4	ground (0 V)
1E, 2E	7, 3	enable input (active HIGH)
V_{CC}	8	supply voltage

All information provided in this document is subject to legal disclaimers.

© NXP B.V. 2013. All rights reserved.

7. Functional description

Table 4. Function table[1]

Input nE	Switch
L	OFF
H	ON

[1] H = HIGH voltage level; L = LOW voltage level.

8. Limiting values

Table 5. Limiting values

In accordance with the Absolute Maximum Rating System (IEC 60134). Voltages are referenced to GND (ground = 0 V).

Symbol	Parameter	Conditions		Min	Max	Unit
V_{CC}	supply voltage			−0.5	+11.0	V
I_{IK}	input clamping current	$V_I < -0.5$ V or $V_I > V_{CC} + 0.5$ V	[1]	-	±20	mA
I_{SK}	switch clamping current	$V_I < -0.5$ V or $V_I > V_{CC} + 0.5$ V	[1]	-	±20	mA
I_{SW}	switch current	$V_{SW} > -0.5$ V or $V_{SW} < V_{CC} + 0.5$ V		-	±20	mA
I_{CC}	supply current			-	30	mA
I_{GND}	ground current			−30	-	mA
T_{stg}	storage temperature			−65	+150	°C
P_{tot}	total power dissipation	T_{amb} = −40 °C to +125 °C				
		per package	[2]	-	300	mW
		per switch	[2]	-	100	mW

[1] The input and output voltage ratings may be exceeded if the input and output current ratings are observed.

[2] For TSSOP8 packages: above 55 °C the value of P_{tot} derates linearly with 2.5 mW/K.
For VSSOP8 packages: above 110 °C the value of P_{tot} derates linearly with 8.0 mW/K.
For XSON8 packages: above 118 °C the value of P_{tot} derates linearly with 7.8 mW/K.

All information provided in this document is subject to legal disclaimers.

© NXP B.V. 2013. All rights reserved.

9. Recommended operating conditions

Table 6. Recommended operating conditions

Voltages are referenced to GND (ground = 0 V).[1]

Symbol	Parameter	Conditions	74HC2G66			74HCT2G66			Unit
			Min	Typ	Max	Min	Typ	Max	
V_{CC}	supply voltage		2.0	5.0	10.0	4.5	5.0	5.5	V
V_I	input voltage		0	-	V_{CC}	0	-	V_{CC}	V
V_O	output voltage		0	-	V_{CC}	0	-	V_{CC}	V
V_{SW}	switch voltage		0	-	V_{CC}	0	-	V_{CC}	V
T_{amb}	ambient temperature		–40	+25	+125	–40	+25	+125	°C
$\Delta t/\Delta V$	input transition rise and fall rate	V_{CC} = 2.0 V	-	-	625	-	-	-	ns/V
		V_{CC} = 4.5 V	-	1.67	139	-	1.67	139	ns/V
		V_{CC} = 6.0 V	-	-	83	-	-	-	ns/V
		V_{CC} = 10.0 V	-	-	35	-	-	-	ns/V

[1] To avoid drawing V_{CC} current out of pin nZ, when switch current flows in pin nY, the voltage drop across the bidirectional switch must not exceed 0.4 V. If the switch current flows into pin nZ, no V_{CC} current will flow out of terminal nY. In this case there is no limit for the voltage drop across the switch, but the voltage at pins nY and nZ may not exceed V_{CC} or GND.

10. Static characteristics

Table 7. Static characteristics

Voltages are referenced to GND (ground = 0 V).

Symbol	Parameter	Conditions	–40 °C to +85 °C			–40 °C to +125 °C		Unit
			Min	Typ[1]	Max	Min	Max	
74HC2G66								
V_{IH}	HIGH-level input voltage	V_{CC} = 2.0 V	1.5	1.2	-	1.5	-	V
		V_{CC} = 4.5 V	3.15	2.4	-	3.15	-	V
		V_{CC} = 6.0 V	4.2	3.2	-	4.2	-	V
		V_{CC} = 9.0 V	6.3	4.7	-	6.3	-	V
V_{IL}	LOW-level input voltage	V_{CC} = 2.0 V	-	0.8	0.5	-	0.5	V
		V_{CC} = 4.5 V	-	2.1	1.35	-	1.35	V
		V_{CC} = 6.0 V	-	2.8	1.8	-	1.8	V
		V_{CC} = 9.0 V	-	4.3	2.7	-	2.7	V
I_I	input leakage current	nE; V_I = V_{CC} or GND						
		V_{CC} = 6.0 V	-	-	±0.1	-	±0.1	μA
		V_{CC} = 9.0 V	-	-	±0.2	-	±0.2	μA
$I_{S(OFF)}$	OFF-state leakage current	nY or nZ; V_{CC} = 9.0 V; see Figure 6	-	0.1	1.0	-	1.0	μA
$I_{S(ON)}$	ON-state leakage current	nY or nZ; V_{CC} = 9.0 V; see Figure 7	-	0.1	1.0	-	1.0	μA
I_{CC}	supply current	nE, nY and nZ = V_{CC} or GND						
		V_{CC} = 6.0 V	-	-	10	-	20	μA
		V_{CC} = 9.0 V	-	-	20	-	40	μA

All information provided in this document is subject to legal disclaimers.

© NXP B.V. 2013. All rights reserved.

Table 7. Static characteristics *...continued*

Voltages are referenced to GND (ground = 0 V).

Symbol	Parameter	Conditions	–40 °C to +85 °C			–40 °C to +125 °C		Unit
			Min	Typ[1]	Max	Min	Max	
C_I	input capacitance		-	3.5	-	-	-	pF
C_{PD}	power dissipation capacitance		-	9	-	-	-	pF
$C_{S(ON)}$	ON-state capacitance		-	8	-	-	-	pF
74HCT2G66								
V_{IH}	HIGH-level input voltage	V_{CC} = 4.5 V to 5.5 V	2.0	1.6	-	2.0	-	V
V_{IL}	LOW-level input voltage	V_{CC} = 4.5 V to 5.5 V	-	1.2	0.8	-	0.8	V
I_I	input leakage current	nE; $V_I = V_{CC}$ or GND; V_{CC} = 5.5 V	-	-	±1.0	-	±1.0	μA
$I_{S(OFF)}$	OFF-state leakage current	nY or nZ; V_{CC} = 5.5 V; see Figure 6	-	0.1	1.0	-	1.0	μA
$I_{S(ON)}$	ON-state leakage current	nY or nZ; V_{CC} = 5.5 V; see Figure 7	-	0.1	1.0	-	1.0	μA
I_{CC}	supply current	nE, nY and nZ = V_{CC} or GND; V_{CC} = 4.5 V to 5.5 V	-	-	10	-	20	μA
ΔI_{CC}	additional supply current	nE = V_{CC} – 2.1 V; I_O = 0 A; V_{CC} = 4.5 V to 5.5 V;	-	-	375	-	410	μA
C_I	input capacitance		-	3.5	-	-	-	pF
C_{PD}	power dissipation capacitance		-	9	-	-	-	pF
$C_{S(ON)}$	ON-state capacitance		-	8	-	-	-	pF

[1] Typical values are measured at T_{amb} = 25 °C.

10.1 Test circuits

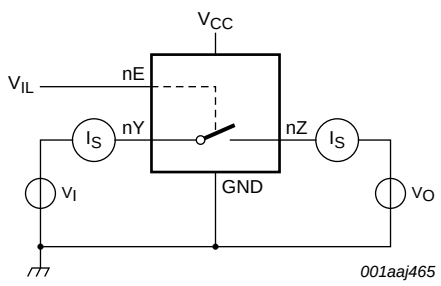

$V_I = V_{CC}$ or GND and V_O = GND or V_{CC}.

Fig 6. Test circuit for measuring OFF-state leakage current

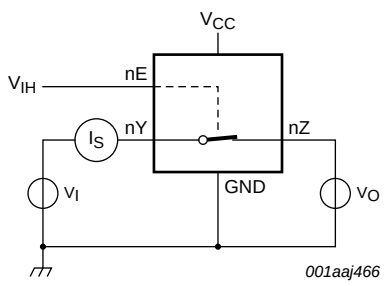

$V_I = V_{CC}$ or GND and V_O = open circuit.

Fig 7. Test circuit for measuring ON-state leakage current

All information provided in this document is subject to legal disclaimers.

© NXP B.V. 2013. All rights reserved.

10.2 ON resistance

Table 8. ON resistance for 74HC2G66 and 74HCT2G66

At recommended operating conditions; voltages are referenced to GND (ground 0 V); for graph see Figure 9.

Symbol	Parameter	Conditions	–40 °C to +85 °C			–40 °C to +125 °C		Unit
			Min	Typ[2]	Max	Min	Max	
74HC2G66[1]								
$R_{ON(peak)}$	ON resistance (peak)	V_I = GND to V_{CC}; see Figure 8 and 9						
		I_{SW} = 0.1 mA; V_{CC} = 2.0 V	-	250	-	-	-	Ω
		I_{SW} = 1.0 mA; V_{CC} = 4.5 V	-	41	118	-	142	Ω
		I_{SW} = 1.0 mA; V_{CC} = 6.0 V	-	30	105	-	126	Ω
		I_{SW} = 1.0 mA; V_{CC} = 9.0 V	-	21	88	-	105	Ω
$R_{ON(rail)}$	ON resistance (rail)	V_I = GND; see Figure 8 and 9						
		I_{SW} = 0.1 mA; V_{CC} = 2.0 V	-	65	-	-	-	Ω
		I_{SW} = 1.0 mA; V_{CC} = 4.5 V	-	28	95	-	115	Ω
		I_{SW} = 1.0 mA; V_{CC} = 6.0 V	-	22	82	-	100	Ω
		I_{SW} = 1.0 mA; V_{CC} = 9.0 V	-	18	70	-	80	Ω
		V_I = V_{CC}; see Figure 8 and 9						
		I_{SW} = 0.1 mA; V_{CC} = 2.0 V	-	65	-	-	-	Ω
		I_{SW} = 1.0 mA; V_{CC} = 4.5 V	-	31	106	-	128	Ω
		I_{SW} = 1.0 mA; V_{CC} = 6.0 V	-	23	94	-	113	Ω
		I_{SW} = 1.0 mA; V_{CC} = 9.0 V	-	19	78	-	95	Ω
ΔR_{ON}	ON resistance mismatch between channels	V_I = V_{CC} to GND; see Figure 8 and 9						
		V_{CC} = 4.5 V	-	5	-	-	-	Ω
		V_{CC} = 6.0 V	-	4	-	-	-	Ω
		V_{CC} = 9.0 V	-	3	-	-	-	Ω
74HCT2G66								
$R_{ON(peak)}$	ON resistance (peak)	V_I = GND to V_{CC}; see Figure 8 and 9						
		I_{SW} = 1.0 mA; V_{CC} = 4.5 V	-	41	118	-	142	Ω
$R_{ON(rail)}$	ON resistance (rail)	V_I = GND; see Figure 8 and 9						
		I_{SW} = 1.0 mA; V_{CC} = 4.5 V	-	28	95	-	115	Ω
		V_I = V_{CC}; see Figure 8 and 9						
		I_{SW} = 1.0 mA; V_{CC} = 4.5 V	-	31	106	-	128	Ω
ΔR_{ON}	ON resistance mismatch between channels	V_I = V_{CC} to GND; see Figure 8 and 9						
		V_{CC} = 4.5 V	-	5	-	-	-	Ω

[1] At supply voltages approaching 2 V, the ON resistance becomes extremely non-linear. Therefore it is recommended that these devices be used to transmit digital signals only, when using this supply voltage.

[2] Typical values are measured at T_{amb} = 25 °C.

All information provided in this document is subject to legal disclaimers.

© NXP B.V. 2013. All rights reserved.

10.3 ON resistance test circuit and graphs

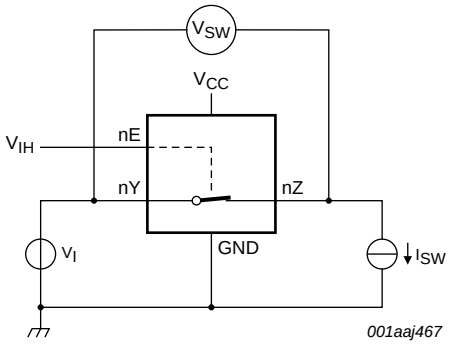

$R_{ON} = V_{SW} / I_{SW}$.

Fig 8. Test circuit for measuring ON resistance

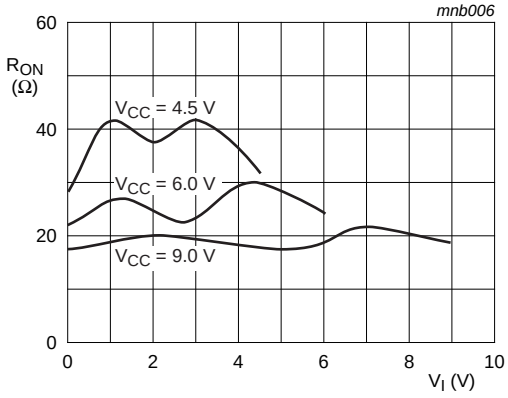

T_{amb} = 25 °C.

Fig 9. Typical ON resistance as a function of input voltage

11. Dynamic characteristics

Table 9. Dynamic characteristics

Voltages are referenced to GND (ground = 0 V); For test circuit see Figure 12.

Symbol	Parameter	Conditions		–40 °C to +85 °C			–40 °C to +125 °C		Unit
				Min	Typ[1]	Max	Min	Max	
74HC2G66									
t_{pd}	propagation delay	nY to nZ or nZ to nY; $R_L = \infty\ \Omega$; see Figure 10	[2]						
		V_{CC} = 2.0 V		-	6.5	65	-	80	ns
		V_{CC} = 4.5 V		-	2	13	-	15	ns
		V_{CC} = 6.0 V		-	1.5	11	-	14	ns
		V_{CC} = 9.0 V		-	1.2	10	-	12	ns
t_{en}	enable time	nE to nY or nZ; see Figure 11	[2]						
		V_{CC} = 2.0 V		-	40	125	-	150	ns
		V_{CC} = 4.5 V		-	12	29	-	30	ns
		V_{CC} = 6.0 V		-	10	21	-	26	ns
		V_{CC} = 9.0 V		-	7	16	-	20	ns
t_{dis}	disable time	nE to nY or nZ; see Figure 11	[2]						
		V_{CC} = 2.0 V		-	21	145	-	175	ns
		V_{CC} = 4.5 V		-	12	29	-	35	ns
		V_{CC} = 6.0 V		-	11	28	-	33	ns
		V_{CC} = 9.0 V		-	10	23	-	27	ns
C_{PD}	power dissipation capacitance	V_I = GND to V_{CC}	[3]	-	9	-	-	-	pF

All information provided in this document is subject to legal disclaimers.

© NXP B.V. 2013. All rights reserved.

Table 9. Dynamic characteristics *...continued*

Voltages are referenced to GND (ground = 0 V); For test circuit see Figure 12.

Symbol	Parameter	Conditions		–40 °C to +85 °C			–40 °C to +125 °C		Unit
				Min	Typ[1]	Max	Min	Max	
74HCT2G66									
t_{pd}	propagation delay	nY to nZ or nZ to nY; $R_L = \infty\ \Omega$; see Figure 10	[2]						
		V_{CC} = 4.5 V		-	2	15	-	18	ns
t_{en}	enable time	nE to nY or nZ; see Figure 11	[2]						
		V_{CC} = 4.5 V		-	13	30	-	36	ns
t_{dis}	disable time	nE to nY or nZ; see Figure 11	[2]						
		V_{CC} = 4.5 V		-	13	44	-	53	ns
C_{PD}	power dissipation capacitance	V_I = GND to V_{CC} – 1.5 V	[3]	-	9	-	-	-	pF

[1] All typical values are measured at T_{amb} = 25 °C.

[2] t_{pd} is the same as t_{PLH} and t_{PHL}.
t_{en} is the same as t_{PZL} and t_{PZH}.
t_{dis} is the same as t_{PLZ} and t_{PHZ}.

[3] C_{PD} is used to determine the dynamic power dissipation P_D (μW).
$P_D = C_{PD} \times V_{CC}^2 \times f_i + \Sigma((C_L \times C_{SW}) \times V_{CC}^2 \times f_o)$ where:
f_i = input frequency in MHz;
f_o = output frequency in MHz;
C_L = output load capacitance in pF;
C_{SW} = maximum switch capacitance in pF (see Table 7);
V_{CC} = supply voltage in volts;
$\Sigma((C_L \times C_{SW}) \times V_{CC}^2 \times f_o)$ = sum of outputs.

11.1 Waveforms and test circuit

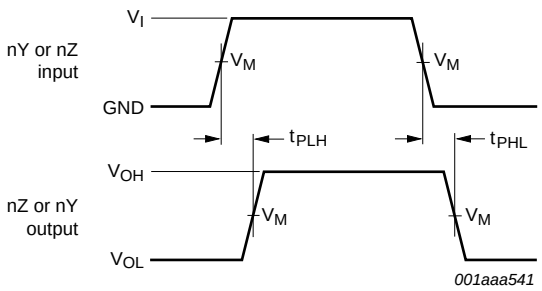

Measurement points are given in Table 10.

Logic levels: V_{OL} and V_{OH} are typical output voltage levels that occur with the output load.

Fig 10. Input (nY or nZ) to output (nZ or nY) propagation delays

All information provided in this document is subject to legal disclaimers.

© NXP B.V. 2013. All rights reserved.

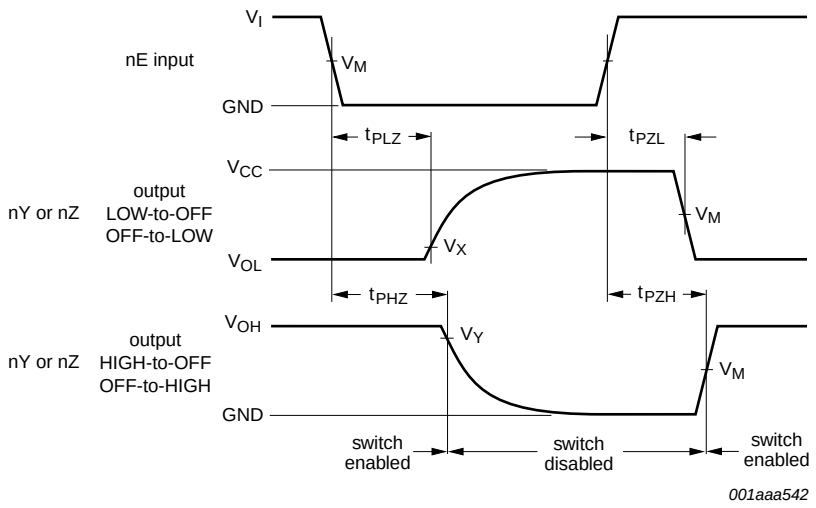

Measurement points are given in Table 10.

Logic levels: V_{OL} and V_{OH} are typical output voltage levels that occur with the output load.

Fig 11. Enable and disable times

Table 10. Measurement points

Type	Input	Output		
	V_M	V_M	V_X	V_Y
74HC2G66	$0.5V_{CC}$	$0.5V_{CC}$	V_{OL} + 10 %	V_{OH} − 10 %
74HCT2G66	1.3 V	1.3 V	V_{OL} + 10 %	V_{OH} − 10 %

All information provided in this document is subject to legal disclaimers.

© NXP B.V. 2013. All rights reserved.

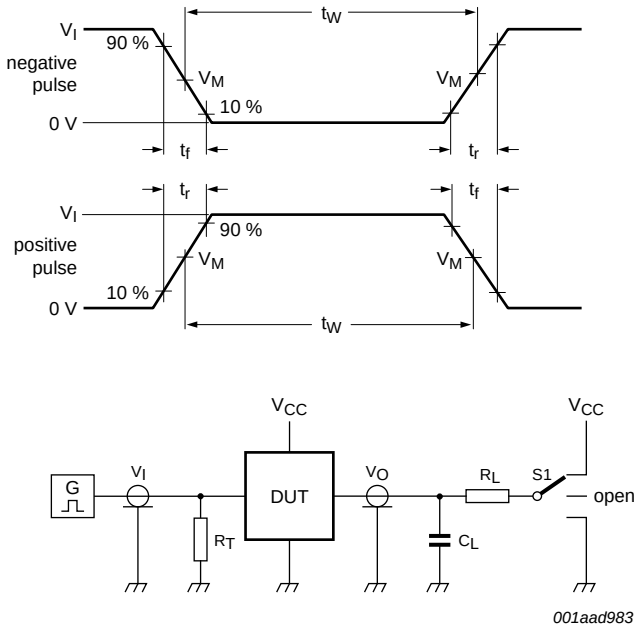

Test data is given in Table 11.

Definitions for test circuit:

R_T = Termination resistance should be equal to output impedance Z_o of the pulse generator.

C_L = Load capacitance including jig and probe capacitance.

R_L = Load resistance.

S1 = Test selection switch.

Fig 12. Test circuit for measuring switching times

Table 11. Test data

Type	Input		Load		S1 position		
	V_I	t_r, t_f[1]	C_L	R_L	t_{PHL}, t_{PLH}	t_{PZH}, t_{PHZ}	t_{PZL}, t_{PLZ}
74HC2G66	GND to V_{CC}	6 ns	50 pF	1 kΩ	open	GND	V_{CC}
74HCT2G66	GND to 3 V	6 ns	50 pF	1 kΩ	open	GND	V_{CC}

[1] There is no constraint on t_r, t_f with a 50 % duty factor when measuring f_{max}.

11.2 Additional dynamic characteristics

Table 12. Additional dynamic characteristics for 74HC2G66 and 74HCT2G66

GND = 0 V; $t_r = t_f$ = 6.0 ns; C_L = 50 pF; unless otherwise specified. All typical values are measured at T_{amb} = 25 °C.

Symbol	Parameter	Conditions	Min	Typ	Max	Unit
THD	total harmonic distortion	f_i = 1 kHz; R_L = 10 kΩ; see Figure 13				%
		V_{CC} = 4.5 V; V_I = 4.0 V (p-p)	-	0.04	-	%
		V_{CC} = 9.0 V; V_I = 8.0 V (p-p)	-	0.02	-	%
		f_i = 10 kHz; R_L = 10 kΩ; see Figure 13				
		V_{CC} = 4.5 V; V_I = 4.0 V (p-p)	-	0.12	-	%
		V_{CC} = 9.0 V; V_I = 8.0 V (p-p)	-	0.06	-	%

All information provided in this document is subject to legal disclaimers.

© NXP B.V. 2013. All rights reserved.

Table 12. Additional dynamic characteristics for 74HC2G66 and 74HCT2G66 *...continued*

GND = 0 V; $t_r = t_f = 6.0$ ns; $C_L = 50$ pF; unless otherwise specified. All typical values are measured at $T_{amb} = 25$ °C.

Symbol	Parameter	Conditions	Min	Typ	Max	Unit
$f_{(-3dB)}$	–3 dB frequency response	$R_L = 50\ \Omega$; $C_L = 10$ pF; see Figure 14 and 15				
		$V_{CC} = 4.5$ V	-	180	-	MHz
		$V_{CC} = 9.0$ V	-	200	-	MHz
α_{iso}	isolation (OFF-state)	$R_L = 600\ \Omega$; $f_i = 1$ MHz; see Figure 16 and 17				
		$V_{CC} = 4.5$ V	-	–50	-	dB
		$V_{CC} = 9.0$ V	-	–50	-	dB
V_{ct}	crosstalk voltage	between digital input and switch (peak to peak value); $R_L = 600\ \Omega$; $f_i = 1$ MHz; see Figure 18				
		$V_{CC} = 4.5$ V	-	110	-	mV
		$V_{CC} = 9.0$ V	-	220	-	mV
Xtalk	crosstalk	between switches; $R_L = 600\ \Omega$; $f_i = 1$ MHz; see Figure 19				
		$V_{CC} = 4.5$ V	-	–60	-	dB
		$V_{CC} = 9.0$ V	-	–60	-	dB

11.3 Test circuits and graphs

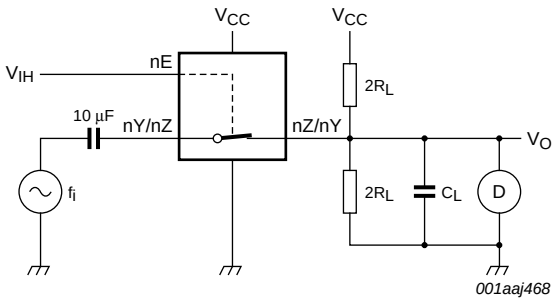

Fig 13. Test circuit for measuring total harmonic distortion

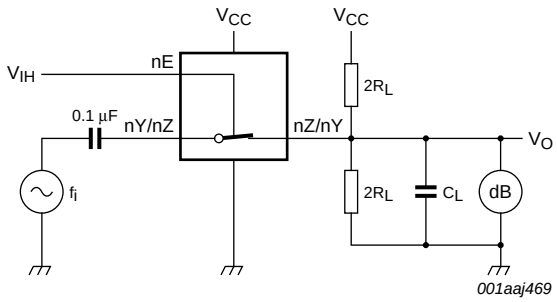

With $f_i = 1$ MHz adjust the switch input voltage for a 0 dBm level at the switch output, (0 dBm = 1 mW into 50 Ω). Then Increase the input frequency until the dB meter reads –3 dB.

Fig 14. Test circuit for measuring the –3 dB frequency response

All information provided in this document is subject to legal disclaimers.

© NXP B.V. 2013. All rights reserved.

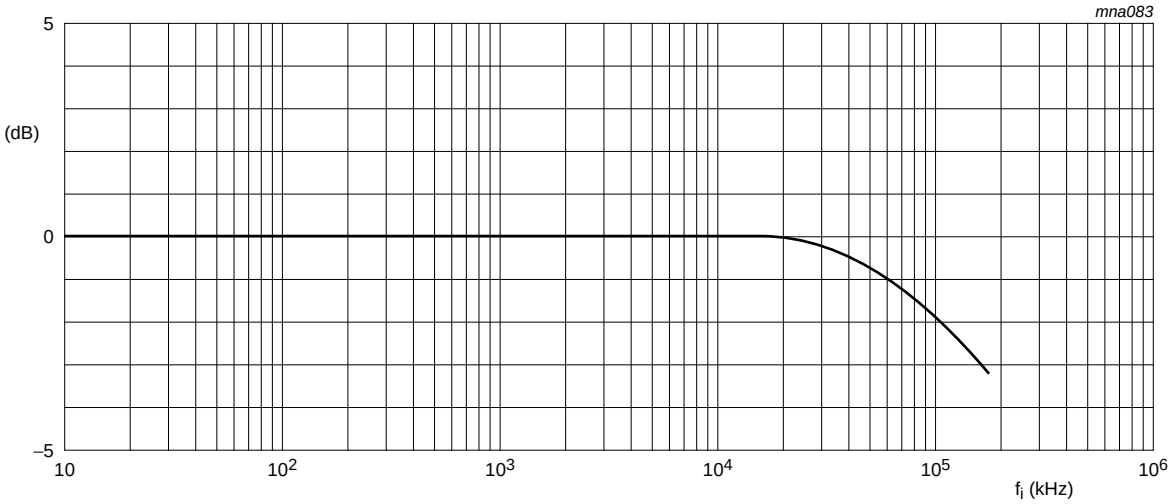

Test conditions: V_{CC} = 4.5 V; GND = 0 V; R_L = 50 Ω; R_{SOURCE} = 1 kΩ.

Fig 15. Typical –3 dB frequency response

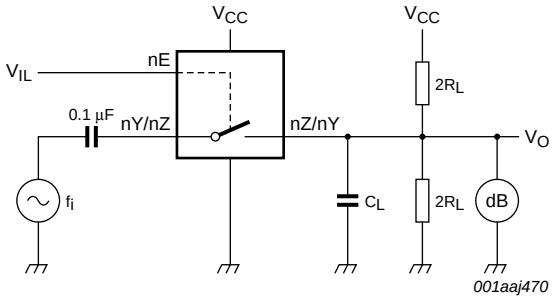

Adjust the switch input voltage for a 0 dBm level (0 dBm = 1 mW into 600 Ω)

Fig 16. Test circuit for measuring isolation (OFF-state)

All information provided in this document is subject to legal disclaimers.

© NXP B.V. 2013. All rights reserved.

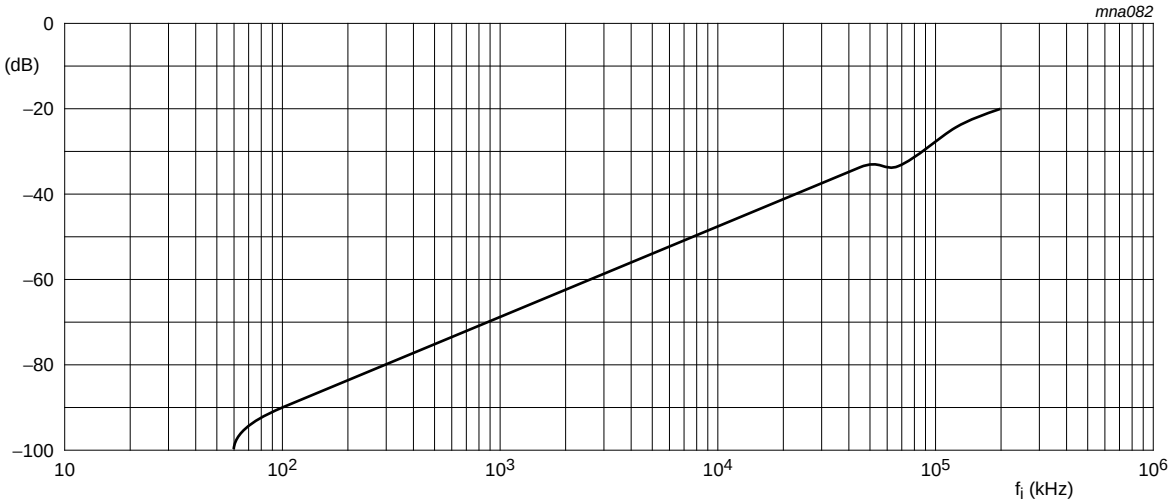

Test conditions: V_{CC} = 4.5 V; GND = 0 V; R_L = 50 Ω; R_{SOURCE} = 1 kΩ.

Fig 17. Typical isolation (OFF-state) as a function of frequency

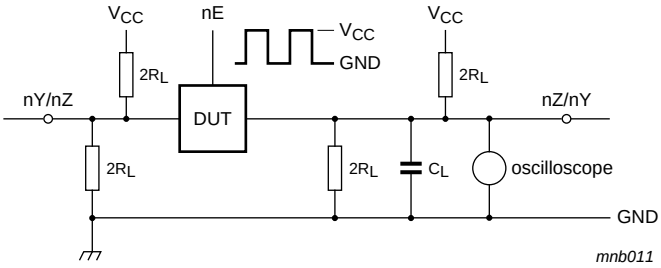

a. Circuit

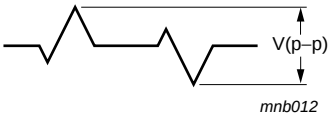

b. Crosstalk voltage

Adjust the switch input voltage for a 0 dBm level (0 dBm = 1 mW into 600 Ω)

Fig 18. Test circuit for measuring crosstalk voltage (between the digital input and the switch)

All information provided in this document is subject to legal disclaimers.

© NXP B.V. 2013. All rights reserved.

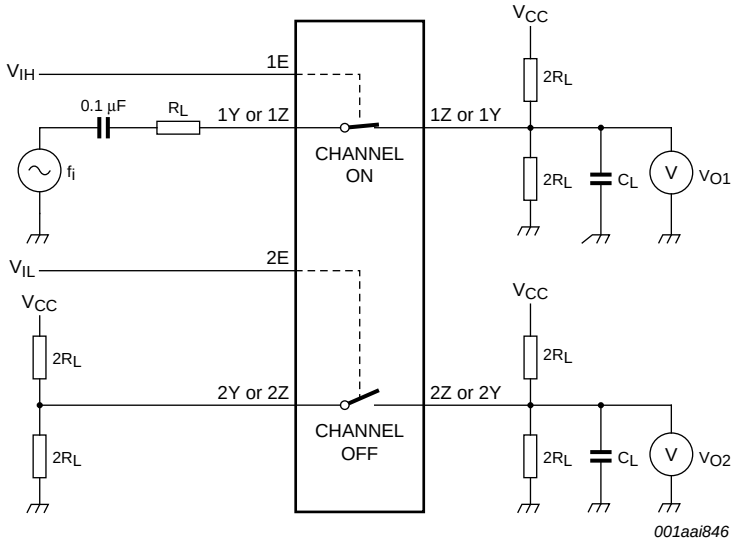

Adjust the switch input voltage for a 0 dBm level (0 dBm = 1 mW into 600 Ω)

Fig 19. Test circuit for measuring crosstalk (between the switches)

All information provided in this document is subject to legal disclaimers.

© NXP B.V. 2013. All rights reserved.

12. Package outline

TSSOP8: plastic thin shrink small outline package; 8 leads; body width 3 mm; lead length 0.5 mm SOT505-2

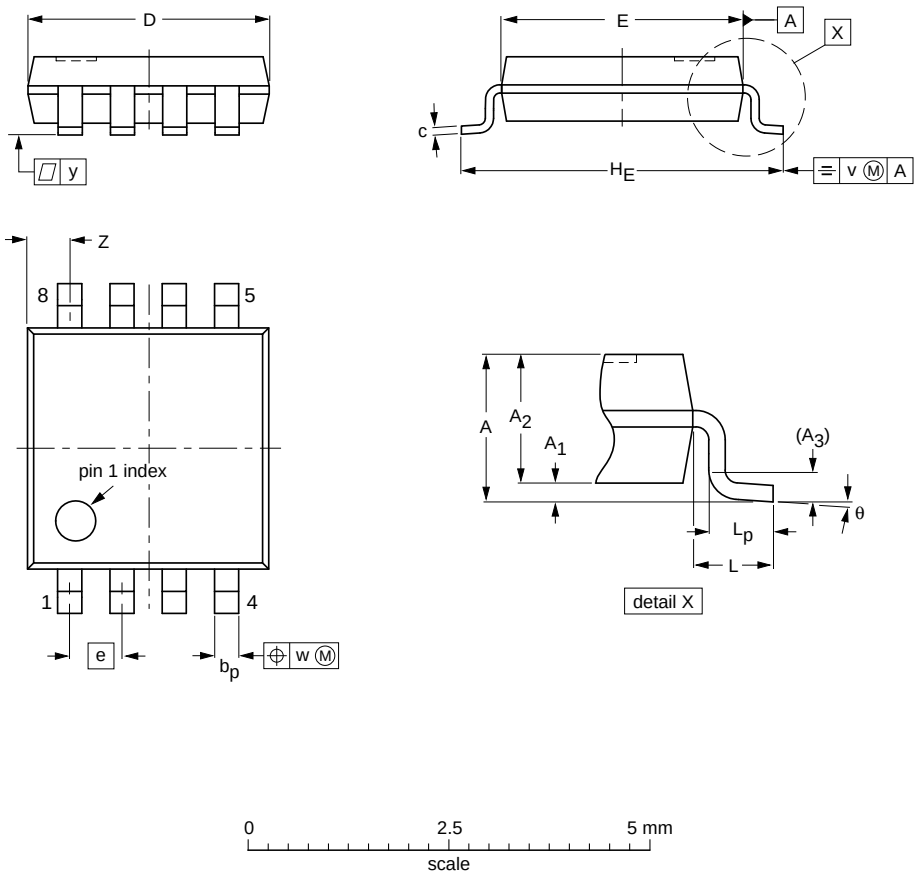

DIMENSIONS (mm are the original dimensions)

UNIT	A max.	A_1	A_2	A_3	b_p	c	$D^{(1)}$	$E^{(1)}$	e	H_E	L	L_p	v	w	y	$Z^{(1)}$	θ
mm	1.1	0.15 0.00	0.95 0.75	0.25	0.38 0.22	0.18 0.08	3.1 2.9	3.1 2.9	0.65	4.1 3.9	0.5	0.47 0.33	0.2	0.13	0.1	0.70 0.35	8° 0°

Note

1. Plastic or metal protrusions of 0.15 mm maximum per side are not included.

OUTLINE VERSION	REFERENCES				EUROPEAN PROJECTION	ISSUE DATE
	IEC	JEDEC	JEITA			
SOT505-2		- - -				02-01-16

Fig 20. Package outline SOT505-2 (TSSOP8)

All information provided in this document is subject to legal disclaimers.

© NXP B.V. 2013. All rights reserved.

VSSOP8: plastic very thin shrink small outline package; 8 leads; body width 2.3 mm **SOT765-1**

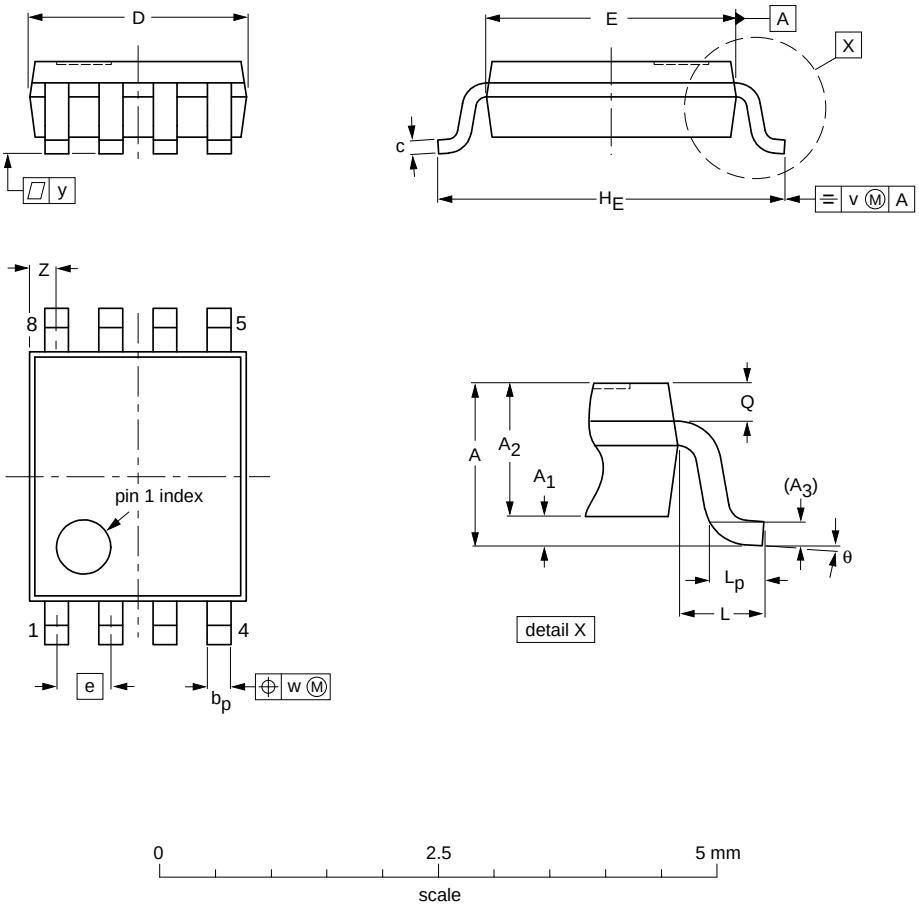

DIMENSIONS (mm are the original dimensions)

UNIT	A max.	A_1	A_2	A_3	b_p	c	D(1)	E(2)	e	H_E	L	L_p	Q	v	w	y	Z(1)	θ
mm	1	0.15 0.00	0.85 0.60	0.12	0.27 0.17	0.23 0.08	2.1 1.9	2.4 2.2	0.5	3.2 3.0	0.4	0.40 0.15	0.21 0.19	0.2	0.13	0.1	0.4 0.1	8° 0°

Notes

1. Plastic or metal protrusions of 0.15 mm maximum per side are not included.
2. Plastic or metal protrusions of 0.25 mm maximum per side are not included.

OUTLINE VERSION	REFERENCES				EUROPEAN PROJECTION	ISSUE DATE
	IEC	JEDEC	JEITA			
SOT765-1		MO-187				02-06-07

Fig 21. Package outline SOT765-1 (VSSOP8)

All information provided in this document is subject to legal disclaimers.

© NXP B.V. 2013. All rights reserved.

XSON8: plastic extremely thin small outline package; no leads; 8 terminals; body 1 x 1.95 x 0.5 mm **SOT833-1**

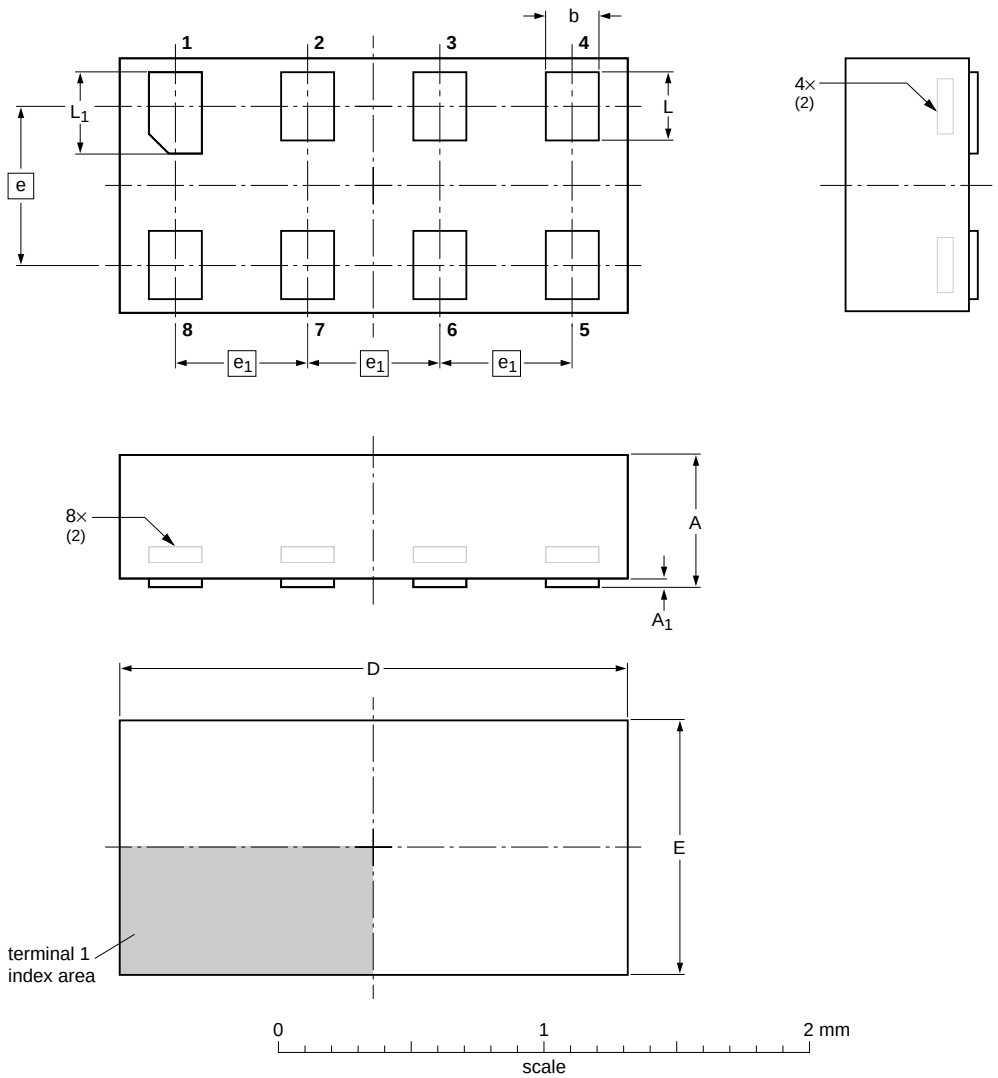

DIMENSIONS (mm are the original dimensions)

UNIT	A(1) max	A_1 max	b	D	E	e	e_1	L	L_1
mm	0.5	0.04	0.25 0.17	2.0 1.9	1.05 0.95	0.6	0.5	0.35 0.27	0.40 0.32

Notes

1. Including plating thickness.
2. Can be visible in some manufacturing processes.

OUTLINE VERSION	REFERENCES				EUROPEAN PROJECTION	ISSUE DATE
	IEC	JEDEC	JEITA			
SOT833-1	- - -	MO-252	- - -			~~07-11-14~~ 07-12-07

Fig 22. Package outline SOT833-1 (XSON8)

All information provided in this document is subject to legal disclaimers.

© NXP B.V. 2013. All rights reserved.

XSON8: plastic extremely thin small outline package; no leads; 8 terminals; body 3 x 2 x 0.5 mm **SOT996-2**

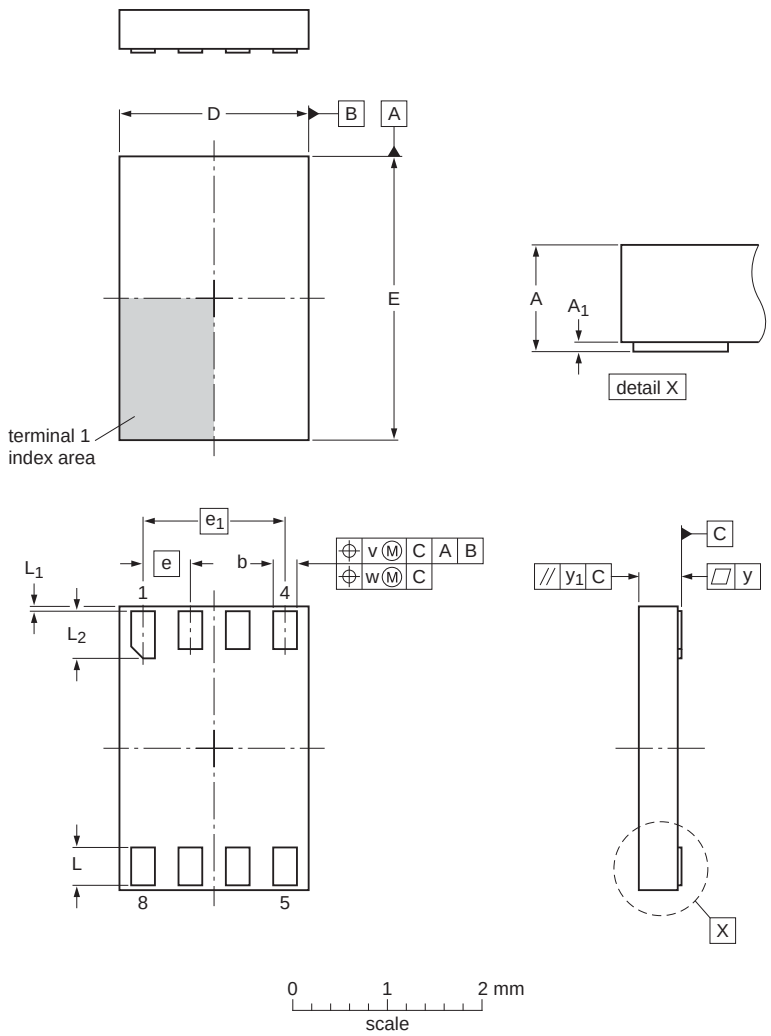

Dimensions (mm are the original dimensions)

Unit(1)		A	A_1	b	D	E	e	e_1	L	L_1	L_2	v	w	y	y_1
mm	max		0.05	0.35	2.1	3.1			0.5	0.15	0.6				
	nom	0.5					0.5	1.5				0.1	0.05	0.05	0.1
	min		0.00	0.15	1.9	2.9			0.3	0.05	0.4				

sot996-2_po

Outline version	References				European projection	Issue date
	IEC	JEDEC	JEITA			
SOT996-2						~~07-12-21~~ 12-11-20

Fig 23. Package outline SOT996-2 (XSON8)

All information provided in this document is subject to legal disclaimers.

© NXP B.V. 2013. All rights reserved.

13. Abbreviations

Table 13. Abbreviations

Acronym	Description
CMOS	Complementary Metal-Oxide Semiconductor
ESD	ElectroStatic Discharge
HBM	Human Body Model
MM	Machine Model
DUT	Device Under Test

14. Revision history

Table 14. Revision history

Document ID	Release date	Data sheet status	Change notice	Supersedes
74HC_HCT2G66 v.10	20131003	Product data sheet	-	74HC_HCT2G66 v.9
Modifications:	• For type numbers 74HC2G66GD and 74HCT2G66GD XSON8U has changed to XSON8.			
74HC_HCT2G66 v.9	20111213	Product data sheet	-	74HC_HCT2G66 v.8
74HC_HCT2G66 v.8	20100923	Product data sheet	-	74HC_HCT2G66 v.7
74HC_HCT2G66 v.7	20100914	Product data sheet	-	74HC_HCT2G66 v.6
74HC_HCT2G66 v.6	20100402	Product data sheet	-	74HC_HCT2G66 v.5
74HC_HCT2G66 v.5	20090126	Product data sheet	-	74HC_HCT2G66 v.4
74HC_HCT2G66 v.4	20040519	Product specification	-	74HC_HCT2G66 v.3
74HC_HCT2G66 v.3	20031126	Product specification	-	74HC_HCT2G66 v.2
74HC_HCT2G66 v.2	20030808	Product specification	-	74HC_HCT2G66 v.1
74HC_HCT2G66 v.1	20030625	Product specification	-	-

All information provided in this document is subject to legal disclaimers.

© NXP B.V. 2013. All rights reserved.

15. Legal information

15.1 Data sheet status

Document status[1][2]	Product status[3]	Definition
Objective [short] data sheet	Development	This document contains data from the objective specification for product development.
Preliminary [short] data sheet	Qualification	This document contains data from the preliminary specification.
Product [short] data sheet	Production	This document contains the product specification.

[1] Please consult the most recently issued document before initiating or completing a design.

[2] The term 'short data sheet' is explained in section "Definitions".

[3] The product status of device(s) described in this document may have changed since this document was published and may differ in case of multiple devices. The latest product status information is available on the Internet at URL http://www.nxp.com.

15.2 Definitions

Draft — The document is a draft version only. The content is still under internal review and subject to formal approval, which may result in modifications or additions. NXP Semiconductors does not give any representations or warranties as to the accuracy or completeness of information included herein and shall have no liability for the consequences of use of such information.

Short data sheet — A short data sheet is an extract from a full data sheet with the same product type number(s) and title. A short data sheet is intended for quick reference only and should not be relied upon to contain detailed and full information. For detailed and full information see the relevant full data sheet, which is available on request via the local NXP Semiconductors sales office. In case of any inconsistency or conflict with the short data sheet, the full data sheet shall prevail.

Product specification — The information and data provided in a Product data sheet shall define the specification of the product as agreed between NXP Semiconductors and its customer, unless NXP Semiconductors and customer have explicitly agreed otherwise in writing. In no event however, shall an agreement be valid in which the NXP Semiconductors product is deemed to offer functions and qualities beyond those described in the Product data sheet.

15.3 Disclaimers

Limited warranty and liability — Information in this document is believed to be accurate and reliable. However, NXP Semiconductors does not give any representations or warranties, expressed or implied, as to the accuracy or completeness of such information and shall have no liability for the consequences of use of such information. NXP Semiconductors takes no responsibility for the content in this document if provided by an information source outside of NXP Semiconductors.

In no event shall NXP Semiconductors be liable for any indirect, incidental, punitive, special or consequential damages (including - without limitation - lost profits, lost savings, business interruption, costs related to the removal or replacement of any products or rework charges) whether or not such damages are based on tort (including negligence), warranty, breach of contract or any other legal theory.

Notwithstanding any damages that customer might incur for any reason whatsoever, NXP Semiconductors' aggregate and cumulative liability towards customer for the products described herein shall be limited in accordance with the *Terms and conditions of commercial sale* of NXP Semiconductors.

Right to make changes — NXP Semiconductors reserves the right to make changes to information published in this document, including without limitation specifications and product descriptions, at any time and without notice. This document supersedes and replaces all information supplied prior to the publication hereof.

Suitability for use — NXP Semiconductors products are not designed, authorized or warranted to be suitable for use in life support, life-critical or safety-critical systems or equipment, nor in applications where failure or malfunction of an NXP Semiconductors product can reasonably be expected to result in personal injury, death or severe property or environmental damage. NXP Semiconductors and its suppliers accept no liability for inclusion and/or use of NXP Semiconductors products in such equipment or applications and therefore such inclusion and/or use is at the customer's own risk.

Applications — Applications that are described herein for any of these products are for illustrative purposes only. NXP Semiconductors makes no representation or warranty that such applications will be suitable for the specified use without further testing or modification.

Customers are responsible for the design and operation of their applications and products using NXP Semiconductors products, and NXP Semiconductors accepts no liability for any assistance with applications or customer product design. It is customer's sole responsibility to determine whether the NXP Semiconductors product is suitable and fit for the customer's applications and products planned, as well as for the planned application and use of customer's third party customer(s). Customers should provide appropriate design and operating safeguards to minimize the risks associated with their applications and products.

NXP Semiconductors does not accept any liability related to any default, damage, costs or problem which is based on any weakness or default in the customer's applications or products, or the application or use by customer's third party customer(s). Customer is responsible for doing all necessary testing for the customer's applications and products using NXP Semiconductors products in order to avoid a default of the applications and the products or of the application or use by customer's third party customer(s). NXP does not accept any liability in this respect.

Limiting values — Stress above one or more limiting values (as defined in the Absolute Maximum Ratings System of IEC 60134) will cause permanent damage to the device. Limiting values are stress ratings only and (proper) operation of the device at these or any other conditions above those given in the Recommended operating conditions section (if present) or the Characteristics sections of this document is not warranted. Constant or repeated exposure to limiting values will permanently and irreversibly affect the quality and reliability of the device.

Terms and conditions of commercial sale — NXP Semiconductors products are sold subject to the general terms and conditions of commercial sale, as published at http://www.nxp.com/profile/terms, unless otherwise agreed in a valid written individual agreement. In case an individual agreement is concluded only the terms and conditions of the respective agreement shall apply. NXP Semiconductors hereby expressly objects to applying the customer's general terms and conditions with regard to the purchase of NXP Semiconductors products by customer.

No offer to sell or license — Nothing in this document may be interpreted or construed as an offer to sell products that is open for acceptance or the grant, conveyance or implication of any license under any copyrights, patents or other industrial or intellectual property rights.

All information provided in this document is subject to legal disclaimers.

© NXP B.V. 2013. All rights reserved.

Export control — This document as well as the item(s) described herein may be subject to export control regulations. Export might require a prior authorization from competent authorities.

Non-automotive qualified products — Unless this data sheet expressly states that this specific NXP Semiconductors product is automotive qualified, the product is not suitable for automotive use. It is neither qualified nor tested in accordance with automotive testing or application requirements. NXP Semiconductors accepts no liability for inclusion and/or use of non-automotive qualified products in automotive equipment or applications.

In the event that customer uses the product for design-in and use in automotive applications to automotive specifications and standards, customer (a) shall use the product without NXP Semiconductors' warranty of the product for such automotive applications, use and specifications, and (b) whenever customer uses the product for automotive applications beyond NXP Semiconductors' specifications such use shall be solely at customer's own risk, and (c) customer fully indemnifies NXP Semiconductors for any liability, damages or failed product claims resulting from customer design and use of the product for automotive applications beyond NXP Semiconductors' standard warranty and NXP Semiconductors' product specifications.

Translations — A non-English (translated) version of a document is for reference only. The English version shall prevail in case of any discrepancy between the translated and English versions.

15.4 Trademarks

Notice: All referenced brands, product names, service names and trademarks are the property of their respective owners.

16. Contact information

For more information, please visit: **http://www.nxp.com**

For sales office addresses, please send an email to: **salesaddresses@nxp.com**

All information provided in this document is subject to legal disclaimers.

© NXP B.V. 2013. All rights reserved.

17. Contents

1 General description 1
2 Features and benefits 1
3 Ordering information 1
4 Marking 2
5 Functional diagram 2
6 Pinning information 3
6.1 Pinning 3
6.2 Pin description 3
7 Functional description 4
8 Limiting values 4
9 Recommended operating conditions 5
10 Static characteristics 5
10.1 Test circuits 6
10.2 ON resistance 7
10.3 ON resistance test circuit and graphs 8
11 Dynamic characteristics 8
11.1 Waveforms and test circuit 9
11.2 Additional dynamic characteristics 11
11.3 Test circuits and graphs 12
12 Package outline 16
13 Abbreviations 20
14 Revision history 20
15 Legal information 21
15.1 Data sheet status 21
15.2 Definitions 21
15.3 Disclaimers 21
15.4 Trademarks 22
16 Contact information 22
17 Contents 23

Please be aware that important notices concerning this document and the product(s) described herein, have been included in section 'Legal information'.

© NXP B.V. 2013. All rights reserved.

For more information, please visit: http://www.nxp.com
For sales office addresses, please send an email to: salesaddresses@nxp.com

Date of release: 3 October 2013
Document identifier: 74HC_HCT2G66