TA7240P

TOSHIBA BIPOLAR LINEAR INTEGRATED CIRCUIT
SILICON MONOLITHIC

5.8W DUAL AUDIO POWER AMPLIFIER.
19W BTL AUDIO POWER AMPLIFIER.

The TA7240P is a dual audio power amplifier for consumer applications. It is designed for high power, low distortion and low noise.
It also contains various kind of protectors.
It is suitable for car-audio power amplifier with high performance.

Unit in mm

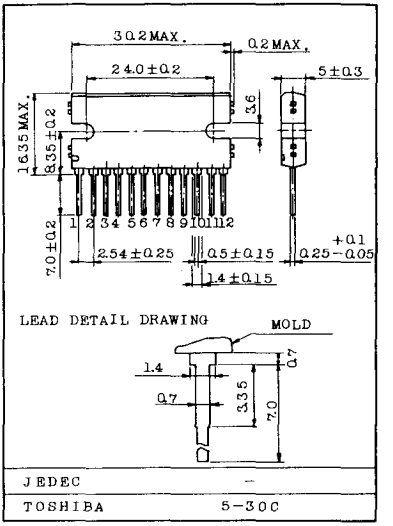

. Operating Supply Voltage Range : $V_{CC(opr)}$=9 ~ 18V

. High Power

V_{CC}=13.2V, f=1kHz, R_L=4Ω

BTL	19W (TYP.)	THD=10%
	15W (TYP.)	THD=1%
DUAL	5.8W (TYP.)	THD=10%

. Low Distortion

V_{CC}=13.2V, f=1kHz, R_L=4Ω

BTL	0.03%	P_{OUT}=4W, G_V=40dB
DUAL	0.07%	P_{OUT}=1W, G_V=52dB

. Low Noise

V_{CC}=13.2V, R_L=4Ω

BTL	0.14mV$_{rms}$	G_V=40dB, R_g=0, DIN NOISE : DIN 45405
DUAL	0.7 mV$_{rms}$	G_V=52dB, R_g=10kΩ, BW=20Hz ~ 20kHz

. Protector : Thermal Shut Down, Over Voltage Protection.
BTL-OCL DC Short Protection.

. Built-in Muting Circuit

MAXIMUM RATINGS (Ta=25°C)

CHARACTERISTIC	SYMBOL	RATING	UNIT
Peak Supply Voltage (0.2 sec)	V_{CC} surge	45	V
DC Supply Voltage	V_{CC} DC	25	V
Operating Supply Voltage	V_{CC} opr	18	V
Output Current (peak)	I_O(peak)	4.5	A
Power Dissipation	P_D	25	W
Operating Temperature	T_{opr}	-30 ~ 75	°C
Storage Temperature	T_{stg}	-55 ~ 150	°C

ELECTRICAL CHARACTERISTICS

(Unless otherwise specified, V_{CC}=13.2V, R_L=4Ω, R_g=600Ω, f=1kHz, Ta=25°C)

	CHARACTERISTIC	SYMBOL	TEST CIR-CUIT	TEST CONDITION	MIN.	TYP.	MAX.	UNIT
Quiescent Current		I_{CCQ}	2	V_{IN}=0	-	80	145	mA
BTL CONNECTION MODE	Output Power	P_{OUT}(1)	1	THD=10%	16	19	-	W
		P_{OUT}(2)	1	THD=1%	12	15	-	W
	Total Harmonic Distortion	THD(1)	1	P_{OUT}=4W, G_V=40dB	-	0.03	0.25	%
	Output Offset Voltage	V_{OFF}	1	V_{IN}=0	-	0	0.35	V
	Voltage Gain	G_V(1)	1	V_{OUT}=0dBm	-	40	-	dB
	Output Noise Voltage	V_{NO}(1)	1	R_g=0 DIN45405 Noise Filter	-	0.14	-	mV_{rms}
	Ripple Rejection Ratio	R.R(1)	1	f_{ripple}=100Hz V_{ripple}=0dBm	-	-52	-40	dB
DUAL MODE	Output Power	P_{OUT}(3)	2	THD=10%	5	5.8	-	W
	Total Harmonic Distortion	THD(2)	2	P_{OUT}=1W	-	0.06	0.30	%
	Voltage Gain	G_V(2)	2	V_{OUT}=0dBm	50	52	54	dB
	Voltage Gain Ratio	ΔG_V	2	V_{OUT}=0dBm	-1	0	1	dB
	Output Noise Voltage	V_{NO}(2)	2	R_g=10kΩ BW=20Hz ~ 20kHz	-	0.7	1.5	mV_{rms}
	Ripple Rejection Ratio	R.R(2)	2	f_{ripple}=100Hz V_{ripple}=0dBm	-	-52	-40	dB
	Cross Talk	C.T	2	V_{OUT}=0dBm	-	-57	-	dB
	Input Resistance	R_{IN}	2	f=1kHz	-	33	-	kΩ

TEST CIRCUIT/APPLICATION CIRCUIT

(1) BTL AMPLIFIER

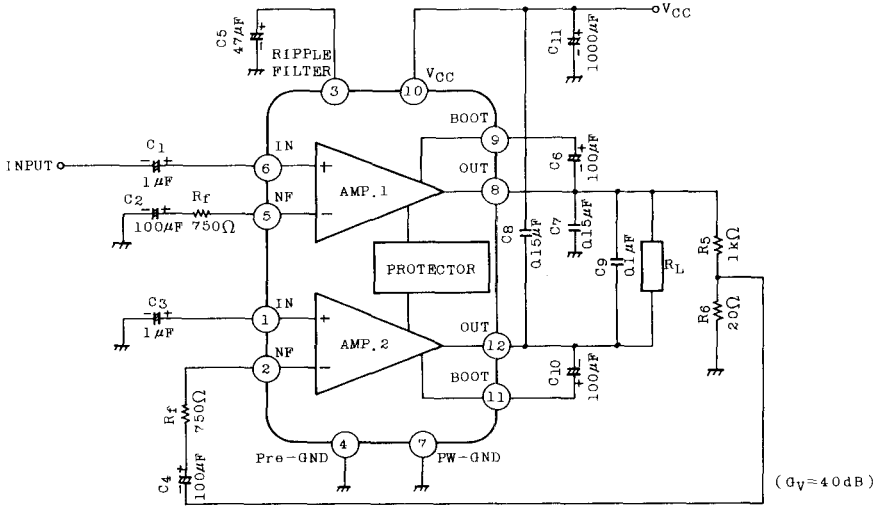

(2) DUAL AMPLIFIER

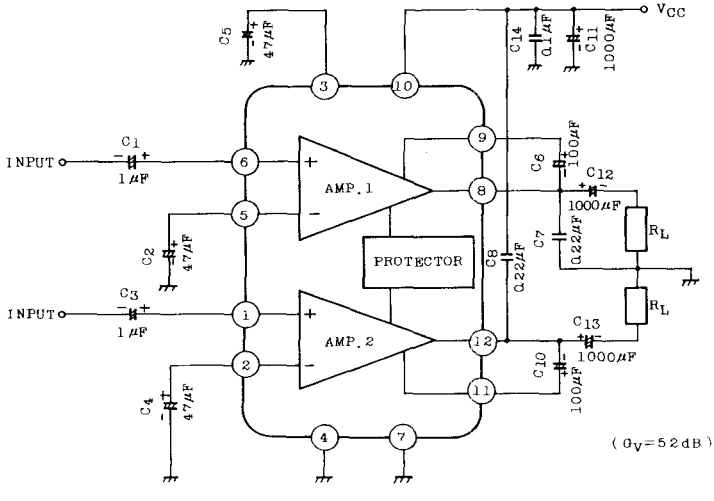

TYPLCAL DC VOLTAGE OF EACH TERMINAL

(V_{CC}=13.2V, Ta=25°C, DUAL MODE TEST CIRCUIT)

TERMINAL No.	1	2	3	4	5	6	7	8	9	10	11	12
DC VOLTAGE (V)	1.5	1.5	4.4	GND	1.5	1.5	GND	6.6	12.7	V_{CC}	12.7	6.6

APPLICATION INFORMATION

1. VOLTAGE GAIN

(1) Dual Mode

The closed loop voltage gain G_V is determined by R_1, R_2, R_3, R_4 and R_f.

$$G_V \doteqdot 20 \log \frac{R_2+R_f+R_1}{R_f+R_1} + 20 \log \frac{R_3+R_4}{R_4} \text{ [dB]}$$

when R_f=0, G_V=52dB(Typ.)

is given.

The recommended voltage gain is more than 40dB.

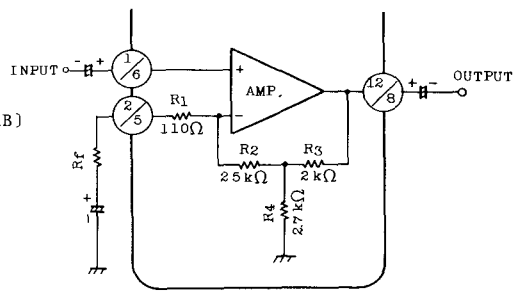

Fig. 1

(2) BTL Mode

The recommended BTL connection amplifier is shown in Figure 2.

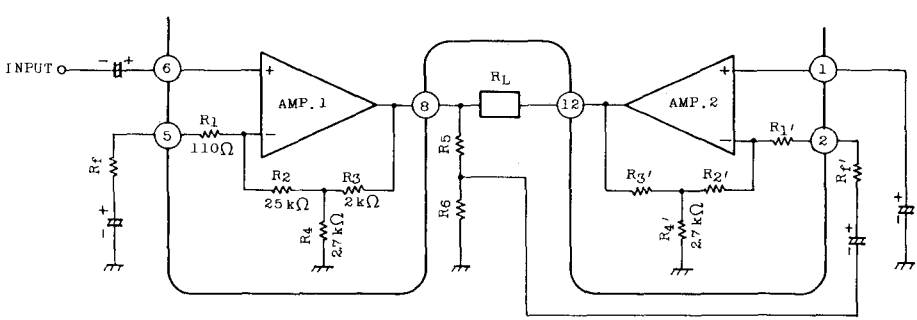

Fig. 2

AMP.1 is noninverting amplifier and AMP.2 is inverting one. The output voltage is divided by resistors R_5 and R_6.
This divided voltage is applied to inverting input of AMP.2. R_5 and R_6 are determined in the following equation.

$$\frac{R_5+R_6}{R_5} = 20\,\ell og\,\frac{R_1'+R_f'+R_2'}{R_1'+R_f'} + 20\,\ell og\,\frac{R_3'+R_4'}{R_4'} \quad \text{..... Gv in Dual Mode}$$

The voltage gain in this circuit is 6dB higher than that in dual mode.

$$G_V = 20\,\ell og\,\frac{R_1+R_f+R_2}{R_1+R_f} + 20\,\ell og\,\frac{R_3+R_4}{R_4} + 6 \qquad [\,dB\,]$$

In case of $R_f=0$

$G_V=52+6=58[\,dB\,]$

In case of $R_f=750\Omega$

$G_V=34+6=40[\,dB\,]$

2. MUTING

Audio muting can be accomplished by connecting pin ③ (ripple filter) to GND as shown in Fig.3.
Then, the bias circuits are cut off.
Amount of muting attenuation is more than 60dB.
Precaution in muting operation is as follows.

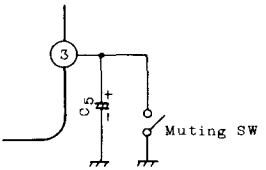

Fig.3

(1) An external voltage should not be applied to Pin ③ That result in destruction.

(2) The recovery time at muting off depends on capacitance C_2, C_4 and C_5 in the test circuit.

(3) The ripple filter C_5 is in dead states at muting on. Therefore, the ripple rejection ratio should be checked at muting on/off in applications.

3. CAPACITOR C_7, C_8

The purpose of capacitor C_7, C_8 is to prevent oscillation.
These capacitors need to be small temperature coefficient. So celamic capacitor is unsuitabel.
A voltage gain less than 40dB results occasionally in a parastic oscillation.
Stability for parastie oscillation is promoted by connecting capacitor of 500∿1000pF between pin ① and pin ② (pin ⑤ and pin ⑥).
The additional capacitors are recommended to be inserted.

4. PRECAUTION AT PRINT BOARD DESIGN

(1) Print Pattern board should be designed in consideration of stability for parastic oscillation.
The following parts-layout is recommended.

1st. Capacitors C_6 and C_{10} are spaced most close to the output pin.

2nd. Capacitor C_7 or C_8 is spaced close to the output pin next to C_6 and C_{10}.

3rd. Capacitor C_9 is spaced close to it next to C_7 and C_8.

4th. Capacitor C_{11} is spaced close to it next to C_9.

(2) Input line (pin ⑥) and PW-GND line (pin ⑦) should not be spaced in parallel. In the paralled layout, output current signal in PW-GND line is bed back to input line by electromagnetic coupling. Then it deteriorates the total harmonic distortion, especially at high audio frequency region.

(3) Undesirable terminating of capacitors deteriorates "pop" noise or THD.
Capacitors C_2, C_4 and C_5 should be terminated to Pre-GND (pin ④).
Capacitors C_7, C_{11}, and C_{14} should be terminated to PW-GND (pin ⑦).

(4) It is recommended to refer the standard print board.

STANDARD P.C.B (BTL AMPLIFIER)

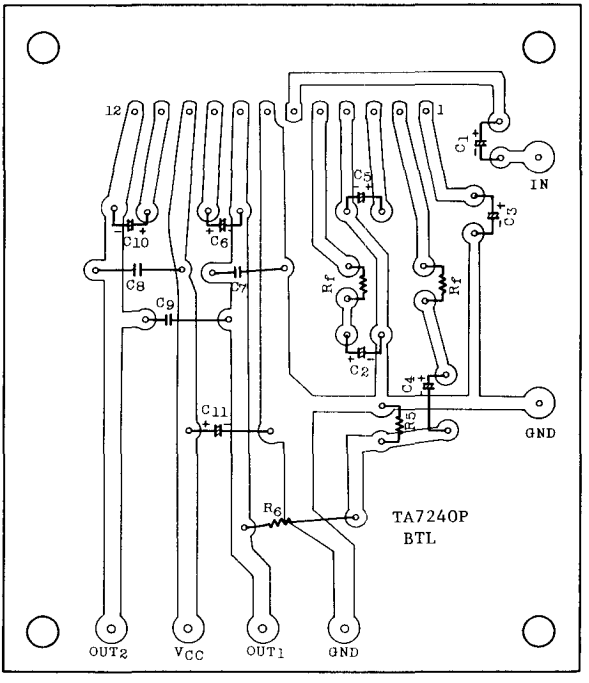

BOTTOM VIEW

STANDARD P.C.B (DUAL AMPLIFIER)

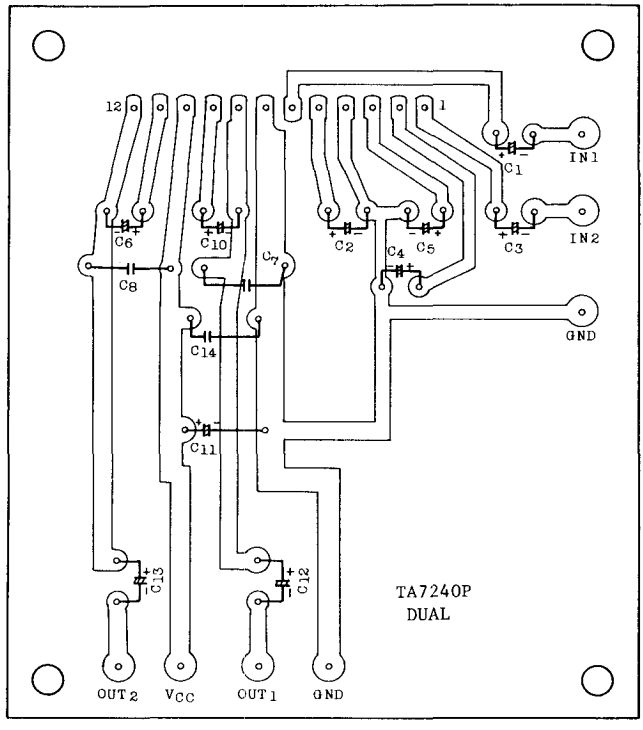

BOTTOM VIEW

THD – P_{OUT}

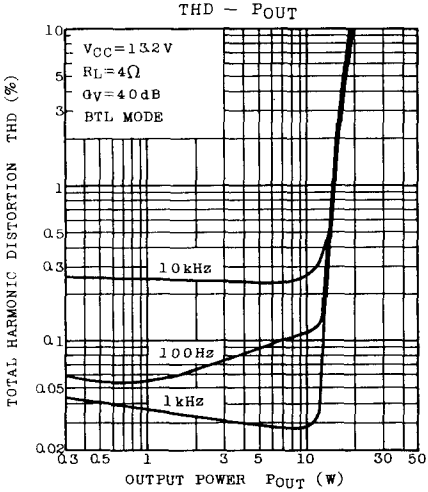

THD – P_{OUT}

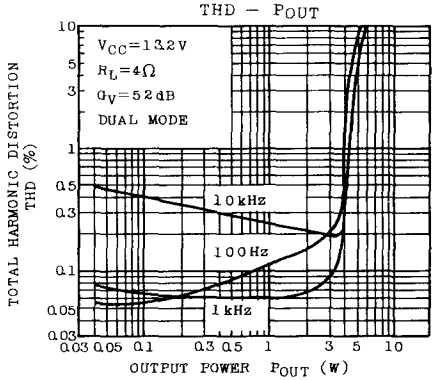

THD – f

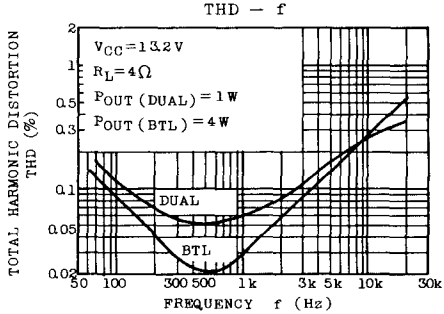

R.R – f

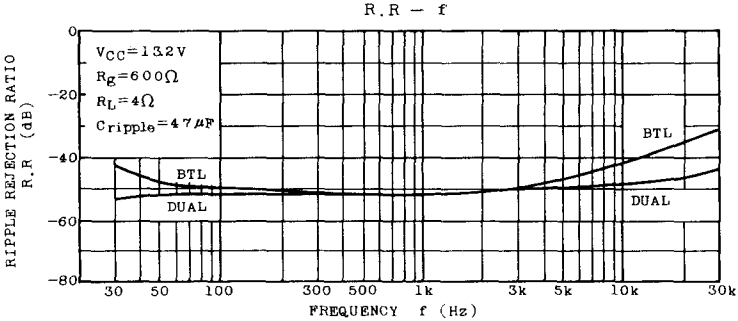

C.T — f

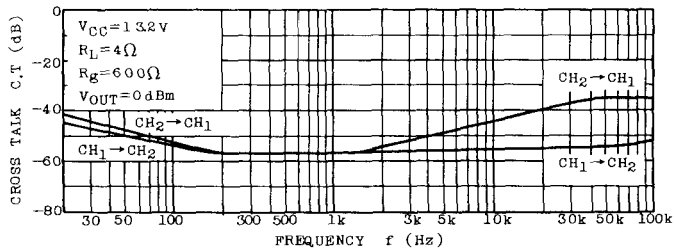

G_V — f

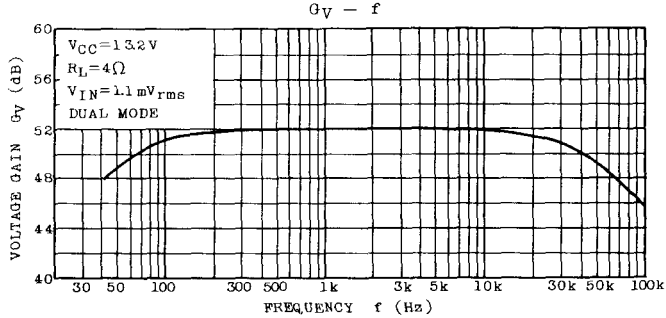

V_{NO} — R_g

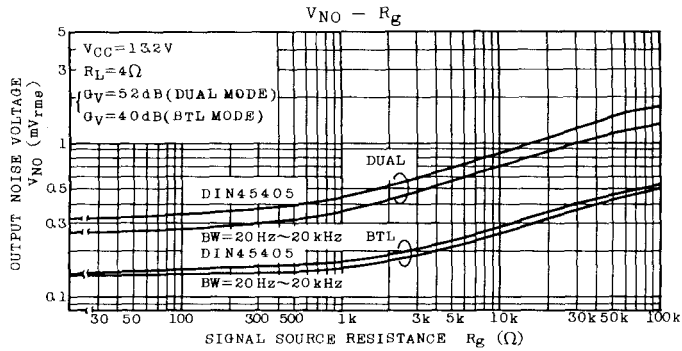

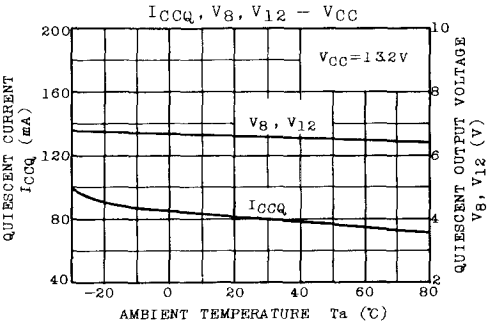
ICCQ, V8, V12 – VCC
VCC=13.2V
V8, V12
ICCQ
QUIESCENT CURRENT ICCQ (mA)
QUIESCENT OUTPUT VOLTAGE V8, V12 (V)
AMBIENT TEMPERATURE Ta (℃)

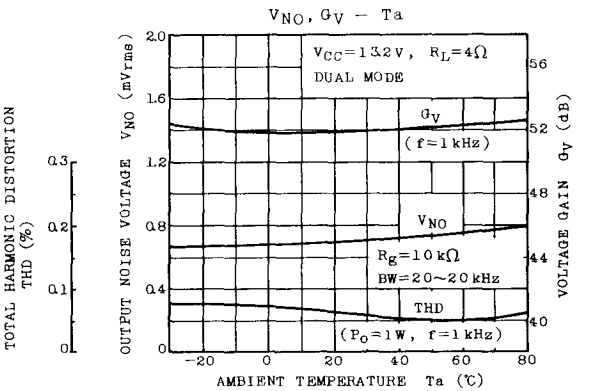
VNO, GV – Ta
VCC=13.2V, RL=4Ω
DUAL MODE
GV
(f=1kHz)
VNO
Rg=10kΩ
BW=20~20kHz
THD
(Po=1W, f=1kHz)
TOTAL HARMONIC DISTORTION THD (%)
OUTPUT NOISE VOLTAGE VNO (mVrms)
VOLTAGE GAIN GV (dB)
AMBIENT TEMPERATURE Ta (℃)

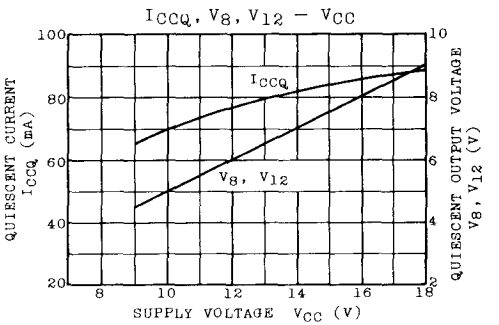
ICCQ, V8, V12 – VCC
ICCQ
V8, V12
QUIESCENT CURRENT ICCQ (mA)
QUIESCENT OUTPUT VOLTAGE V8, V12 (V)
SUPPLY VOLTAGE VCC (V)

P_D MAX – V_{CC}

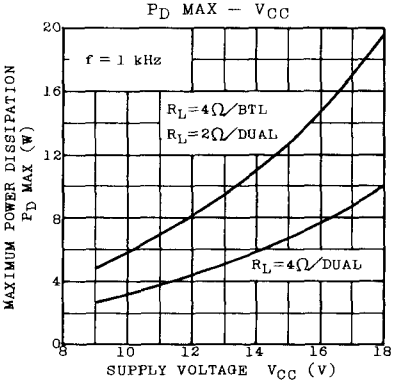

P_D – P_{OUT}

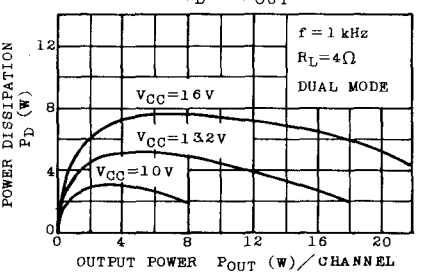

P_D – P_{OUT}

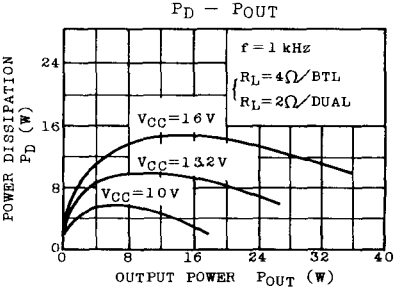

P_D MAX – Ta