# EPS13D2C1HA-110.000M

**EPS13D2 C 1 H A -110.000M**

- **Series** — RoHS Compliant (Pb-free) 3.3V 4 Pad 5mm x 7mm Ceramic SMD LVCMOS Programmable Spread Spectrum Oscillator
- **Frequency Stability** — ±100ppm Maximum over Operating Temperature Range of -20°C to +70°C
- **Duty Cycle** — 50% ±10%
- **Output Control Function** — Tri-State
- **Spread Spectrum** — ±0.25% Center Spread
- **Nominal Frequency** — 110.000MHz

## ELECTRICAL SPECIFICATIONS

| | |
|---|---|
| **Nominal Frequency** | 110.000MHz |
| **Frequency Stability** | ±100ppm Maximum over Operating Temperature Range of -20°C to +70°C (Inclusive of all conditions: Frequency Stability over the Operating Temperature Range, Supply Voltage Change, Output Load Change, First Year Aging at 25°C, Shock, and Vibration.) |
| **Aging at 25°C** | ±5ppm First Year Maximum |
| **Supply Voltage** | 3.3Vdc ±0.3Vdc |
| **Maximum Supply Voltage** | -0.5Vdc to +7.0Vdc |
| **Input Current** | 30mA Maximum (Unloaded; Vdd=3.3Vdc) |
| **Output Voltage Logic High (Voh)** | Vdd-0.4Vdc Minimum (IOH=-8mA) |
| **Output Voltage Logic Low (Vol)** | 0.4Vdc Maximum (IOL=+8mA) |
| **Rise/Fall Time** | 2.7nSec Maximum (Measured at 20% to 80% of Waveform) |
| **Duty Cycle** | 50% ±10% (Measured at 50% of Waveform) |
| **Load Drive Capability** | 15pF Maximum |
| **Output Logic Type** | CMOS |
| **Output Control Function** | Tri-State (High Impedance Internal Pull Down Resistor of 100kOhms Typical on Pad 3, Internal Pull Up Resistor of 100kOhms Typical on Pad 1) |
| **Tri-State Input Voltage (Vih and Vil)** | 70% of Vdd Minimum or No Connection to Enable Output, 30% of Vdd Maximum to Disable Output |
| **Tri-State Output Disable Time** | 350nSec Maximum |
| **Tri-State Output Enable Time** | 350nSec Maximum |
| **Disable Current** | 20mA Maximum (Unloaded; Pad 1=Ground; Vdd=3.3Vdc) |
| **Spread Spectrum** | ±0.25% Center Spread |
| **Modulation Frequency** | 30kHz Minimum, 31.5kHz Typical, 33kHz Maximum |
| **Period Jitter** | 400pSec Maximum (Cycle to Cycle; Spread Spectrum-On; Vdd=3.3Vdc) |
| **Start Up Time** | 10mSec Maximum |
| **Storage Temperature Range** | -55°C to +125°C |

## ENVIRONMENTAL & MECHANICAL SPECIFICATIONS

| | |
|---|---|
| **Fine Leak Test** | MIL-STD-883, Method 1014, Condition A |
| **Gross Leak Test** | MIL-STD-883, Method 1014, Condition C |
| **Mechanical Shock** | MIL-STD-202, Method 213, Condition C |
| **Resistance to Soldering Heat** | MIL-STD-202, Method 210 |
| **Resistance to Solvents** | MIL-STD-202, Method 215 |
| **Solderability** | MIL-STD-883, Method 2003 |
| **Temperature Cycling** | MIL-STD-883, Method 1010 |
| **Vibration** | MIL-STD-883, Method 2007, Condition A |

# EPS13D2C1HA-110.000M

## MECHANICAL DIMENSIONS (all dimensions in millimeters)

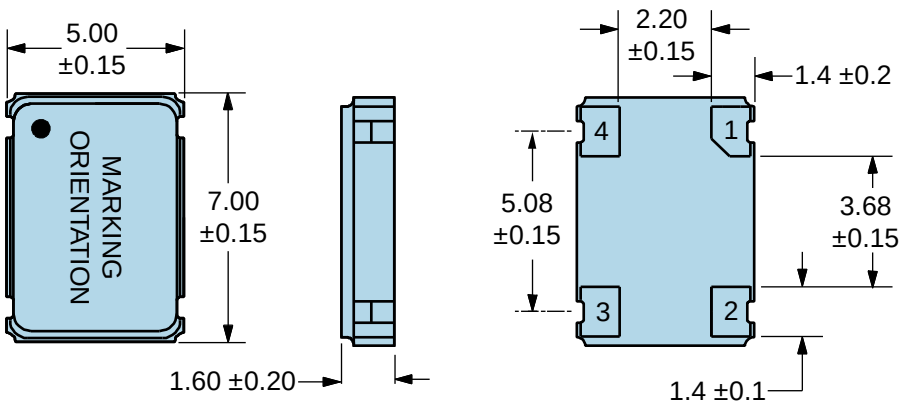


| PIN | CONNECTION |
|---|---|
| 1 | Tri-State |
| 2 | Case/Ground |
| 3 | Output |
| 4 | Supply Voltage |

| LINE | MARKING |
|---|---|
| 1 | **ECLIPTEK** |
| 2 | **110.00M** |
| 3 | **SXXYZZ**<br>*S=Configuration Designator*<br>*XX=Ecliptek Manufacturing Code*<br>*Y=Last Digit of the Year*<br>*ZZ=Week of the Year* |

## Suggested Solder Pad Layout

All Dimensions in Millimeters

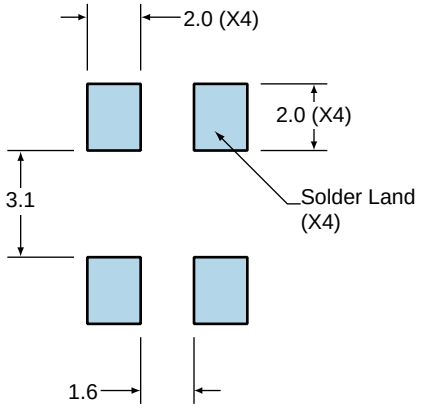


All Tolerances are ±0.1

## OUTPUT WAVEFORM & TIMING DIAGRAM

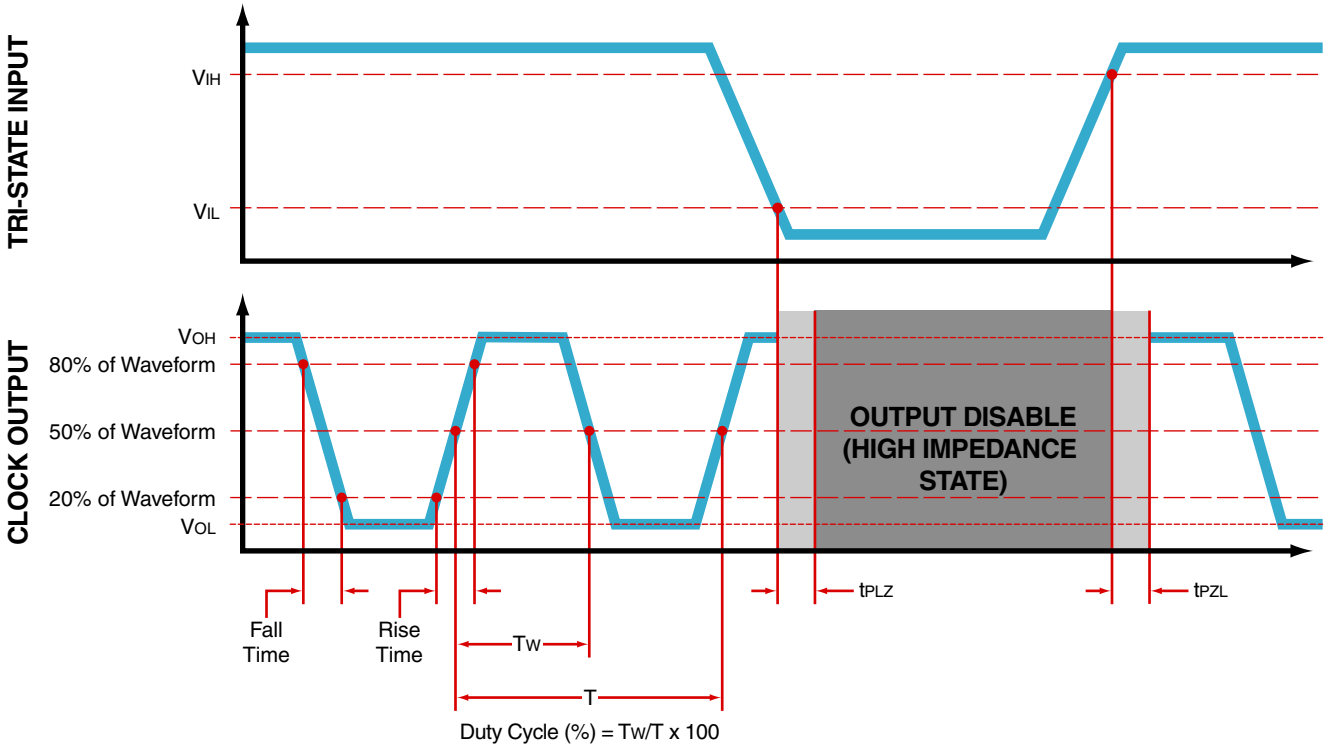


## Test Circuit for CMOS Output

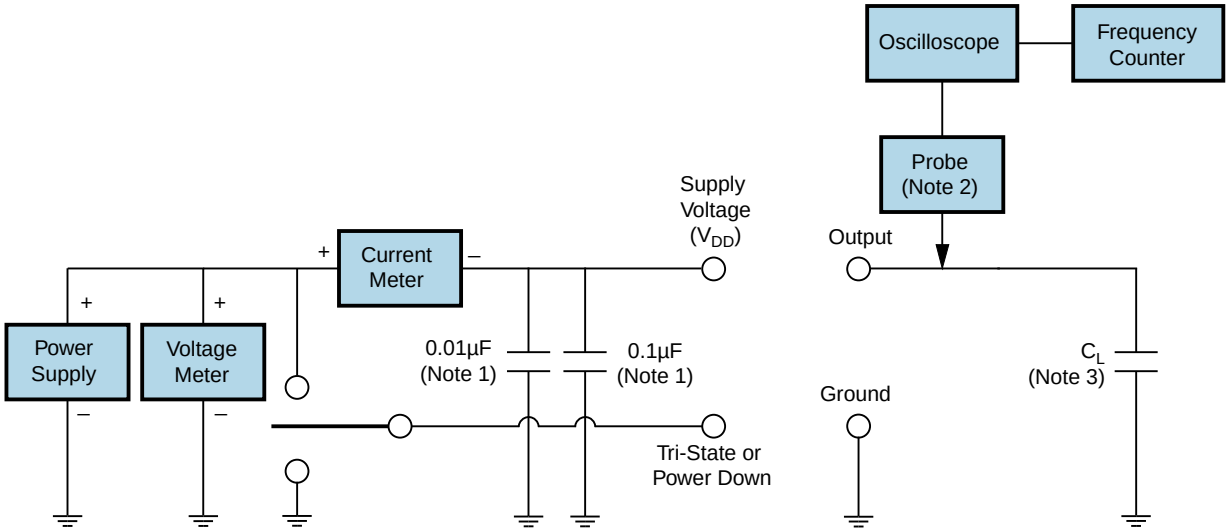


Note 1: An external 0.1µF low frequency tantalum bypass capacitor in parallel with a 0.01µF high frequency ceramic bypass capacitor close to the package ground and $V_{DD}$ pin is required.
Note 2: A low capacitance (<12pF), 10X attenuation factor, high impedance (>10Mohms), and high bandwidth (>300MHz) passive probe is recommended.
Note 3: Capacitance value $C_L$ includes sum of all probe and fixture capacitance.

## Recommended Solder Reflow Methods

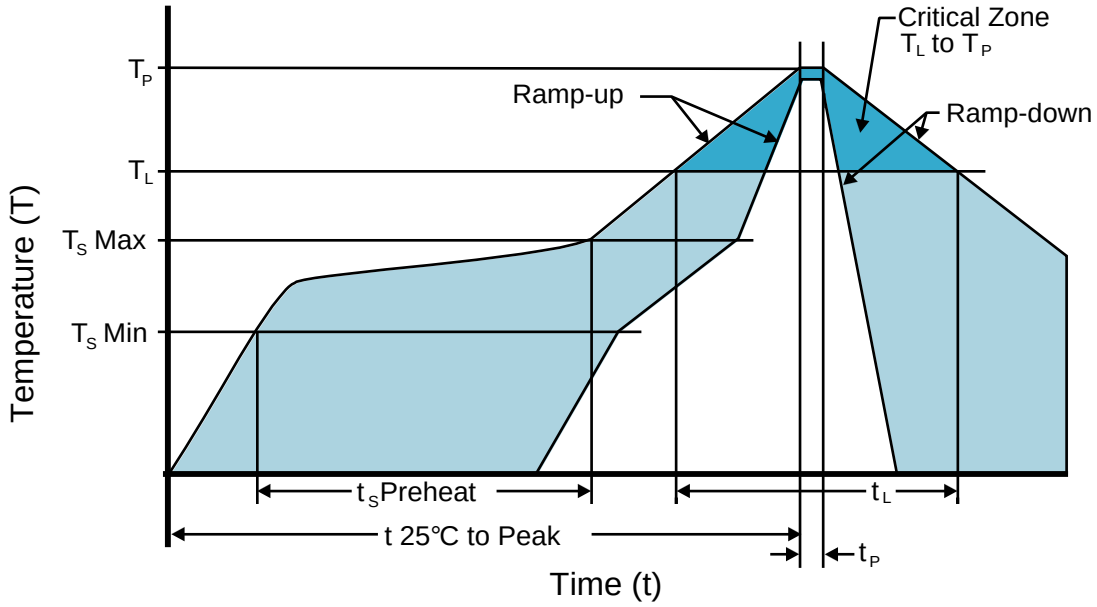


### High Temperature Infrared/Convection

| | |
|---|---|
| **$T_S$ MAX to $T_L$ (Ramp-up Rate)** | 3°C/second Maximum |
| **Preheat** | |
| **- Temperature Minimum ($T_S$ MIN)** | 150°C |
| **- Temperature Typical ($T_S$ TYP)** | 175°C |
| **- Temperature Maximum ($T_S$ MAX)** | 200°C |
| **- Time ($t_S$ MIN)** | 60 - 180 Seconds |
| **Ramp-up Rate ($T_L$ to $T_P$)** | 3°C/second Maximum |
| **Time Maintained Above:** | |
| **- Temperature ($T_L$)** | 217°C |
| **- Time ($t_L$)** | 60 - 150 Seconds |
| **Peak Temperature ($T_P$)** | 260°C Maximum for 10 Seconds Maximum |
| **Target Peak Temperature ($T_P$ Target)** | 250°C +0/-5°C |
| **Time within 5°C of actual peak ($t_p$)** | 20 - 40 seconds |
| **Ramp-down Rate** | 6°C/second Maximum |
| **Time 25°C to Peak Temperature (t)** | 8 minutes Maximum |
| **Moisture Sensitivity Level** | Level 1 |

# Recommended Solder Reflow Methods

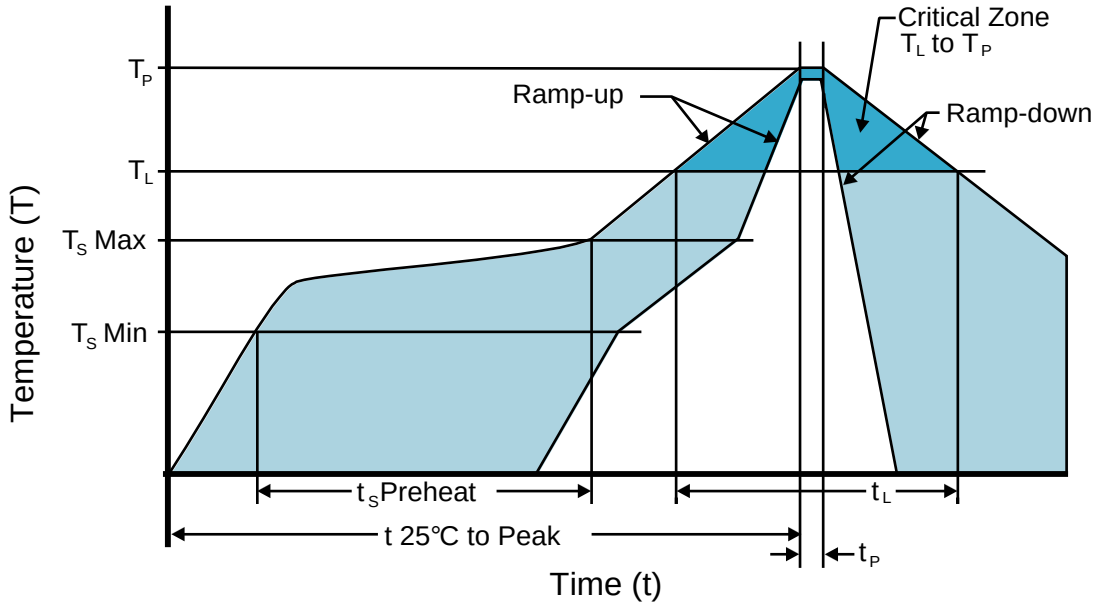


## Low Temperature Infrared/Convection 240°C

| | |
|---|---|
| **$T_S$ MAX to $T_L$ (Ramp-up Rate)** | 5°C/second Maximum |
| **Preheat** | |
| **- Temperature Minimum ($T_S$ MIN)** | N/A |
| **- Temperature Typical ($T_S$ TYP)** | 150°C |
| **- Temperature Maximum ($T_S$ MAX)** | N/A |
| **- Time ($t_S$ MIN)** | 60 - 120 Seconds |
| **Ramp-up Rate ($T_L$ to $T_P$)** | 5°C/second Maximum |
| **Time Maintained Above:** | |
| **- Temperature ($T_L$)** | 150°C |
| **- Time ($t_L$)** | 200 Seconds Maximum |
| **Peak Temperature ($T_P$)** | 240°C Maximum |
| **Target Peak Temperature ($T_P$ Target)** | 240°C Maximum 1 Time / 230°C Maximum 2 Times |
| **Time within 5°C of actual peak ($t_p$)** | 10 seconds Maximum 2 Times / 80 seconds Maximum 1 Time |
| **Ramp-down Rate** | 5°C/second Maximum |
| **Time 25°C to Peak Temperature (t)** | N/A |
| **Moisture Sensitivity Level** | Level 1 |

## Low Temperature Manual Soldering

185°C Maximum for 10 seconds Maximum, 2 times Maximum.

## High Temperature Manual Soldering

260°C Maximum for 5 seconds Maximum, 2 times Maximum.