EPS13D2C1HA-133.333M TR

EPS13D2 C 1 H A -133.333M TR

- **Series** — RoHS Compliant (Pb-free) 3.3V 4 Pad 5mm x 7mm Ceramic SMD LVCMOS Programmable Spread Spectrum Oscillator
- **Frequency Stability** — ±100ppm Maximum over Operating Temperature Range of -20°C to +70°C
- **Duty Cycle** — 50% ±10%
- **Output Control Function** — Tri-State
- **Spread Spectrum** — ±0.25% Center Spread
- **Nominal Frequency** — 133.333MHz
- **Packaging Options** — Tape & Reel

ELECTRICAL SPECIFICATIONS

Nominal Frequency	133.333MHz
Frequency Stability	±100ppm Maximum over Operating Temperature Range of -20°C to +70°C (Inclusive of all conditions: Frequency Stability over the Operating Temperature Range, Supply Voltage Change, Output Load Change, First Year Aging at 25°C, Shock, and Vibration.)
Aging at 25°C	±5ppm First Year Maximum
Supply Voltage	3.3Vdc ±0.3Vdc
Maximum Supply Voltage	-0.5Vdc to +7.0Vdc
Input Current	30mA Maximum (Unloaded; Vdd=3.3Vdc)
Output Voltage Logic High (Voh)	Vdd-0.4Vdc Minimum (IOH=-8mA)
Output Voltage Logic Low (Vol)	0.4Vdc Maximum (IOL=+8mA)
Rise/Fall Time	2.7nSec Maximum (Measured at 20% to 80% of Waveform)
Duty Cycle	50% ±10% (Measured at 50% of Waveform)
Load Drive Capability	15pF Maximum
Output Logic Type	CMOS
Output Control Function	Tri-State (High Impedance Internal Pull Down Resistor of 100kOhms Typical on Pad 3, Internal Pull Up Resistor of 100kOhms Typical on Pad 1)
Tri-State Input Voltage (Vih and Vil)	70% of Vdd Minimum or No Connection to Enable Output, 30% of Vdd Maximum to Disable Output
Tri-State Output Disable Time	350nSec Maximum
Tri-State Output Enable Time	350nSec Maximum
Disable Current	20mA Maximum (Unloaded; Pad 1=Ground; Vdd=3.3Vdc)
Spread Spectrum	±0.25% Center Spread
Modulation Frequency	30kHz Minimum, 31.5kHz Typical, 33kHz Maximum
Period Jitter	300pSec Maximum (Cycle to Cycle; Spread Spectrum-On; Vdd=3.3Vdc)
Start Up Time	10mSec Maximum
Storage Temperature Range	-55°C to +125°C

ENVIRONMENTAL & MECHANICAL SPECIFICATIONS

Fine Leak Test	MIL-STD-883, Method 1014, Condition A
Gross Leak Test	MIL-STD-883, Method 1014, Condition C
Mechanical Shock	MIL-STD-202, Method 213, Condition C
Resistance to Soldering Heat	MIL-STD-202, Method 210
Resistance to Solvents	MIL-STD-202, Method 215
Solderability	MIL-STD-883, Method 2003
Temperature Cycling	MIL-STD-883, Method 1010
Vibration	MIL-STD-883, Method 2007, Condition A

EPS13D2C1HA-133.333M TR

MECHANICAL DIMENSIONS (all dimensions in millimeters)

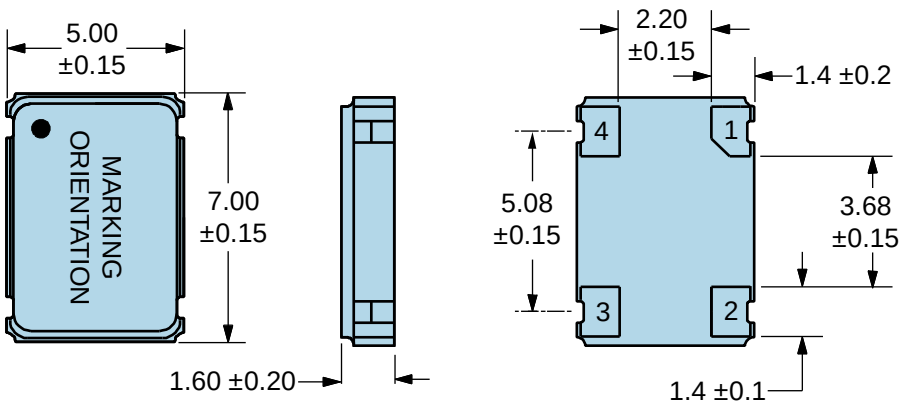

PIN	CONNECTION
1	Tri-State
2	Case/Ground
3	Output
4	Supply Voltage

LINE	MARKING
1	**ECLIPTEK**
2	**133.33M**
3	**SXXYZZ** *S=Configuration Designator* *XX=Ecliptek Manufacturing Code* *Y=Last Digit of the Year* *ZZ=Week of the Year*

Suggested Solder Pad Layout

All Dimensions in Millimeters

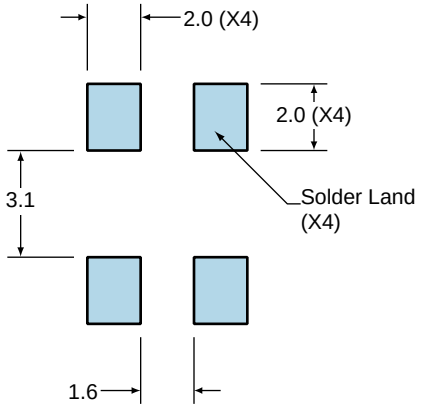

All Tolerances are ±0.1

OUTPUT WAVEFORM & TIMING DIAGRAM

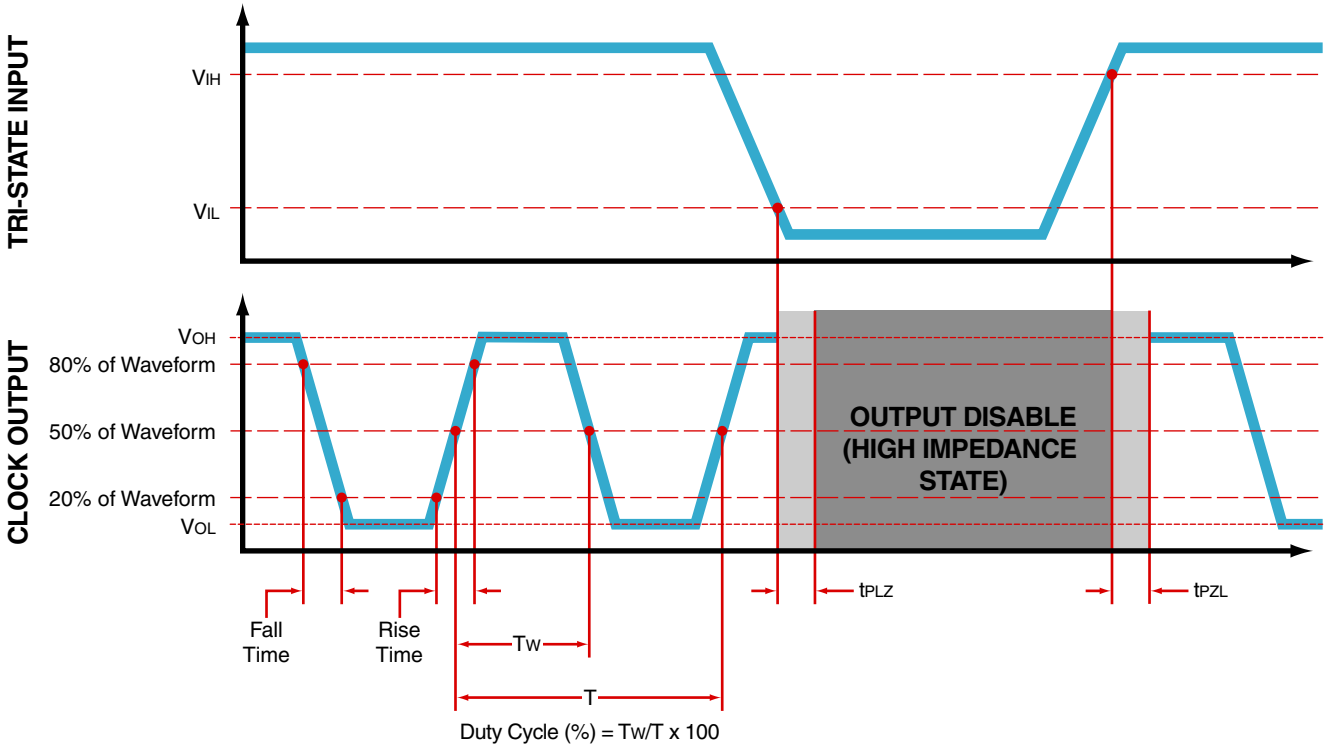

Test Circuit for CMOS Output

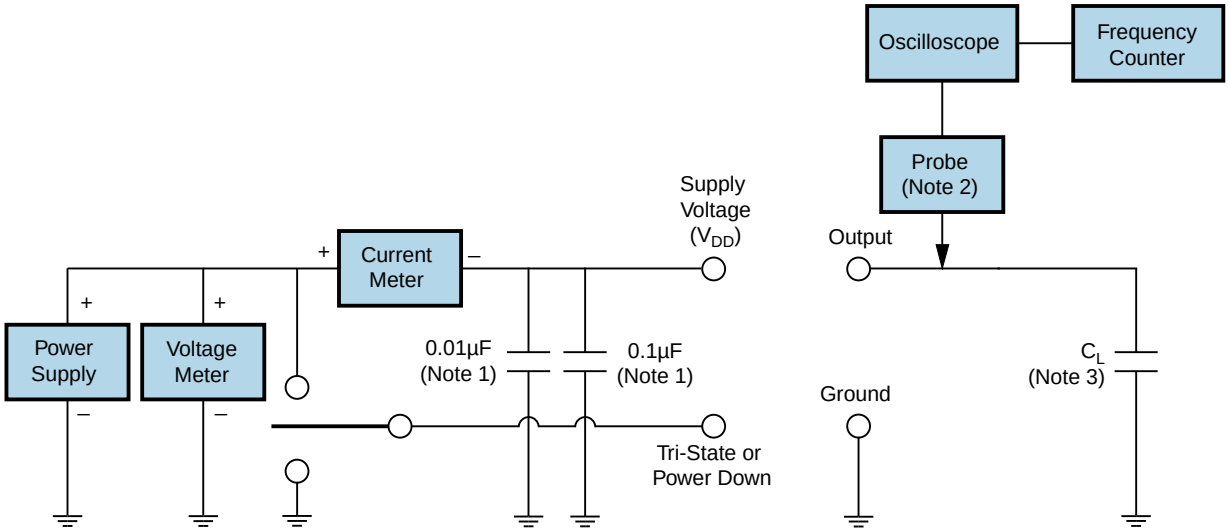

Note 1: An external 0.1µF low frequency tantalum bypass capacitor in parallel with a 0.01µF high frequency ceramic bypass capacitor close to the package ground and V_{DD} pin is required.
Note 2: A low capacitance (<12pF), 10X attenuation factor, high impedance (>10Mohms), and high bandwidth (>300MHz) passive probe is recommended.
Note 3: Capacitance value C_L includes sum of all probe and fixture capacitance.

EPS13D2C1HA-133.333M TR

Tape & Reel Dimensions

Quantity Per Reel: 1,000 units

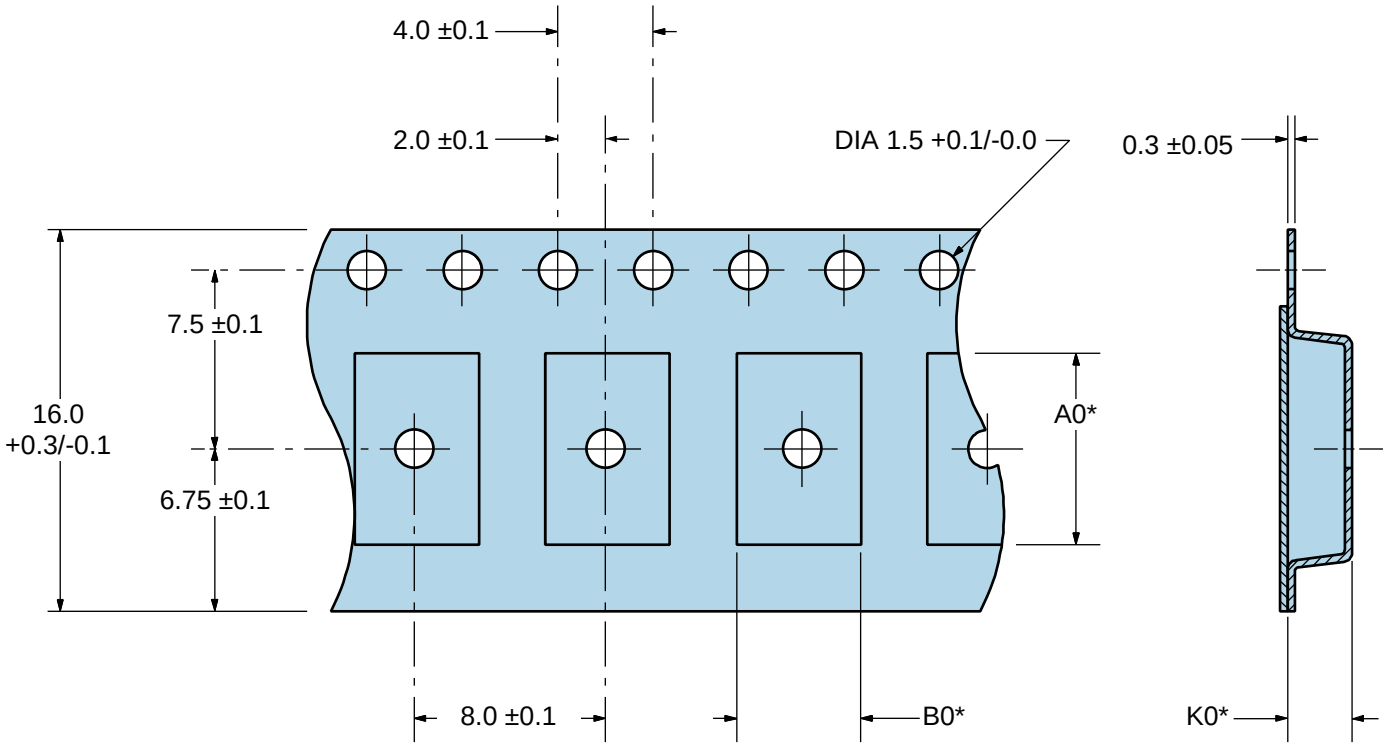

*Compliant to EIA 481A

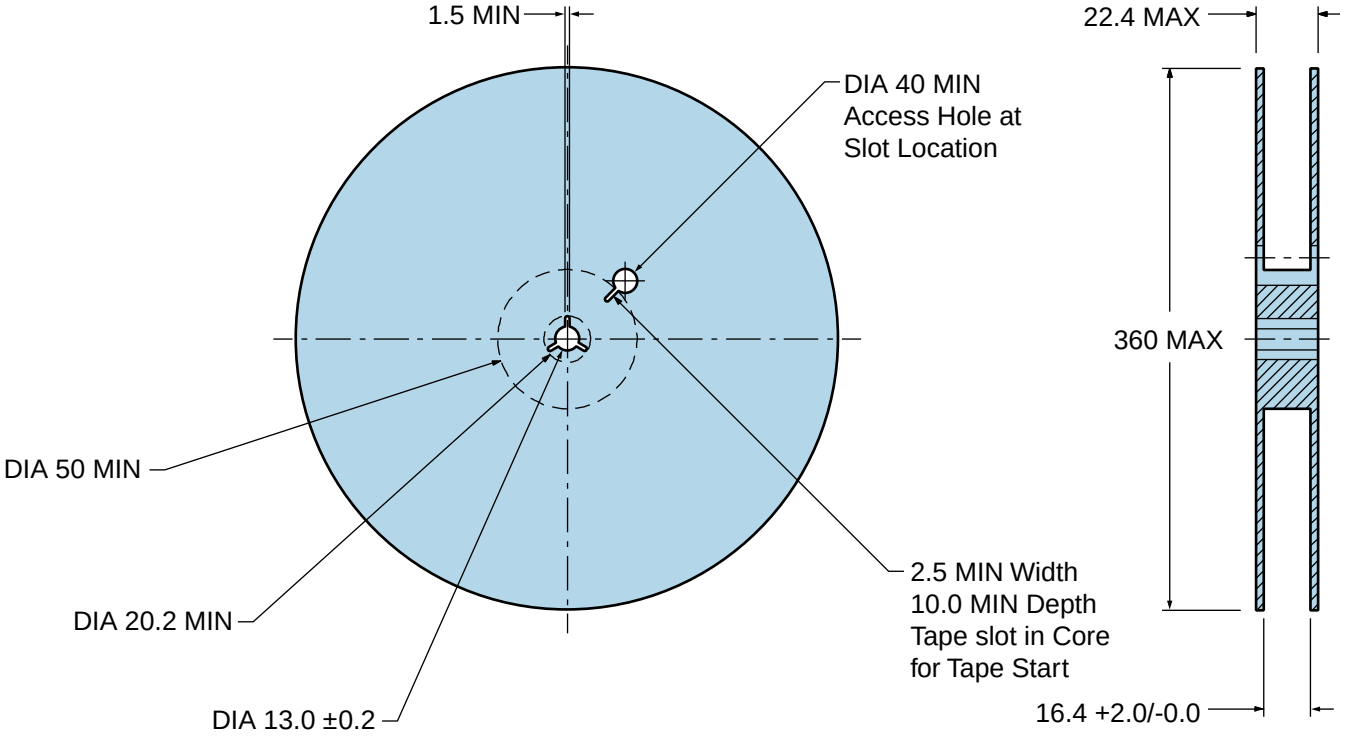

Recommended Solder Reflow Methods

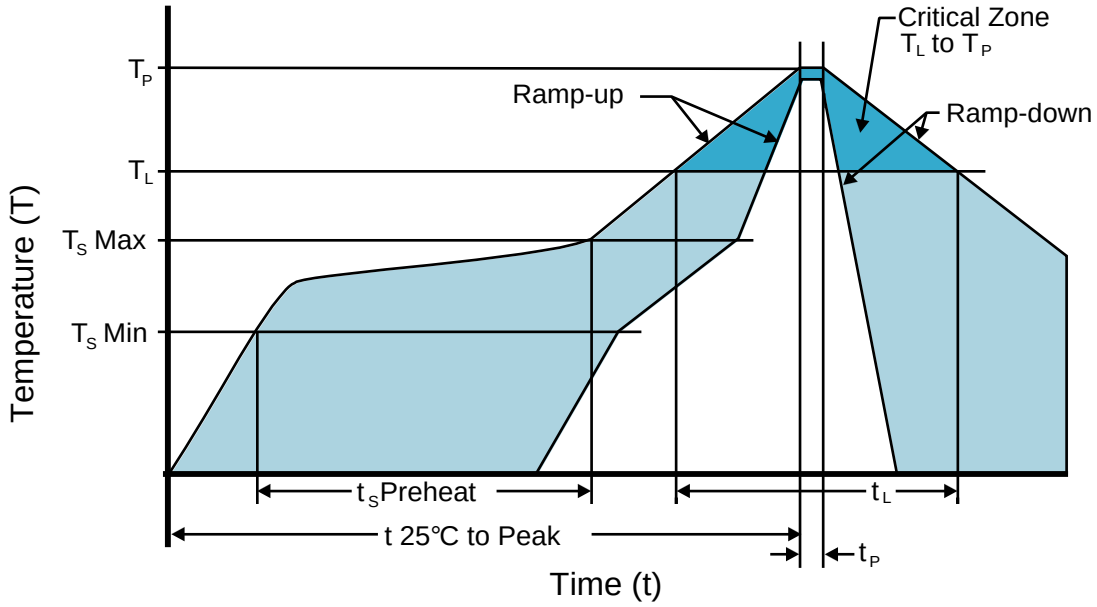

High Temperature Infrared/Convection

T_S MAX to T_L (Ramp-up Rate)	3°C/second Maximum
Preheat	
- Temperature Minimum (T_S MIN)	150°C
- Temperature Typical (T_S TYP)	175°C
- Temperature Maximum (T_S MAX)	200°C
- Time (t_S MIN)	60 - 180 Seconds
Ramp-up Rate (T_L to T_P)	3°C/second Maximum
Time Maintained Above:	
- Temperature (T_L)	217°C
- Time (t_L)	60 - 150 Seconds
Peak Temperature (T_P)	260°C Maximum for 10 Seconds Maximum
Target Peak Temperature (T_P Target)	250°C +0/-5°C
Time within 5°C of actual peak (t_p)	20 - 40 seconds
Ramp-down Rate	6°C/second Maximum
Time 25°C to Peak Temperature (t)	8 minutes Maximum
Moisture Sensitivity Level	Level 1

EPS13D2C1HA-133.333M TR

Recommended Solder Reflow Methods

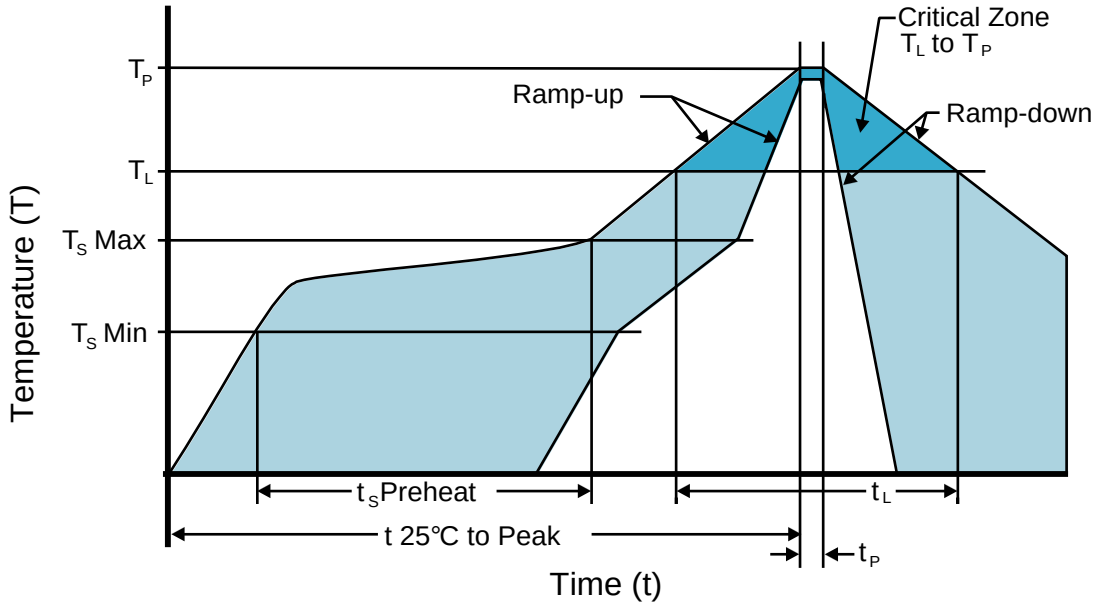

Low Temperature Infrared/Convection 240°C

T_S MAX to T_L (Ramp-up Rate)	5°C/second Maximum
Preheat	
- Temperature Minimum (T_S MIN)	N/A
- Temperature Typical (T_S TYP)	150°C
- Temperature Maximum (T_S MAX)	N/A
- Time (t_S MIN)	60 - 120 Seconds
Ramp-up Rate (T_L to T_P)	5°C/second Maximum
Time Maintained Above:	
- Temperature (T_L)	150°C
- Time (t_L)	200 Seconds Maximum
Peak Temperature (T_P)	240°C Maximum
Target Peak Temperature (T_P Target)	240°C Maximum 1 Time / 230°C Maximum 2 Times
Time within 5°C of actual peak (t_p)	10 seconds Maximum 2 Times / 80 seconds Maximum 1 Time
Ramp-down Rate	5°C/second Maximum
Time 25°C to Peak Temperature (t)	N/A
Moisture Sensitivity Level	Level 1

Low Temperature Manual Soldering

185°C Maximum for 10 seconds Maximum, 2 times Maximum.

High Temperature Manual Soldering

260°C Maximum for 5 seconds Maximum, 2 times Maximum.