ES51C1A10N-10.000M

ES51C1 A 10 N -10.000M

Series
RoHS Compliant (Pb-free) 5mm x 7mm Ceramic SMD
5.0Vdc Clipped Sinewave TC(VC)XO

Operating Temperature Range
0°C to +50°C

Frequency Stability
±1.0ppm Maximum

Control Voltage
None (No Connect on Pin 1)

Nominal Frequency
10.000MHz

ELECTRICAL SPECIFICATIONS

Nominal Frequency	10.000MHz
Frequency Stability vs. Frequency Tolerance	±1.0ppm Maximum (Measured at 25°C ±2°C, Vdd=5.0Vdc, Vc=1.5Vdc)
Frequency Stability	±1.0ppm Maximum
Frequency Stability vs. Input Voltage	±0.2ppm Maximum (Vdd ±5%)
Frequency Stability vs. Aging	±1ppm/Year Maximum (at 25°C)
Frequency Stability vs. Load	±0.2ppm Maximum (±1kOhm//±1pF)
Operating Temperature Range	0°C to +50°C
Supply Voltage	5.0Vdc ±5%
Input Current	1.5mA Maximum
Output Voltage	0.8Vp-p Clipped Sinewave Minimum
Load Drive Capability	10kOhms//10pF
Output Logic Type	Clipped Sinewave
Control Voltage	None (No Connect on Pin 1)
Phase Noise	-80dBc/Hz at 10Hz offset, -115dBc/Hz at 100Hz offset, -135dBc/Hz at 1kHz offset, -145dBc/Hz at 10kHz offset, -145dBc/Hz at 100kHz offset (Typical Values, at 12.800MHz)
Start Up Time	5mSec Maximum
Storage Temperature Range	-55°C to +125°C

ENVIRONMENTAL & MECHANICAL SPECIFICATIONS

Fine Leak Test	MIL-STD-883, Method 1014 Condition A
Gross Leak Test	MIL-STD-883, Method 1014 Condition C
Mechanical Shock	MIL-STD-202, Method 213 Condition C
Resistance to Soldering Heat	MIL-STD-202, Method 210
Resistance to Solvents	MIL-STD-202, Method 215
Solderability	MIL-STD-883, Method 2003
Temperature Cycling	MIL-STD-883, Method 1010
Vibration	MIL-STD-883, Method 2007 Condition A

ES51C1A10N-10.000M

MECHANICAL DIMENSIONS (all dimensions in millimeters)

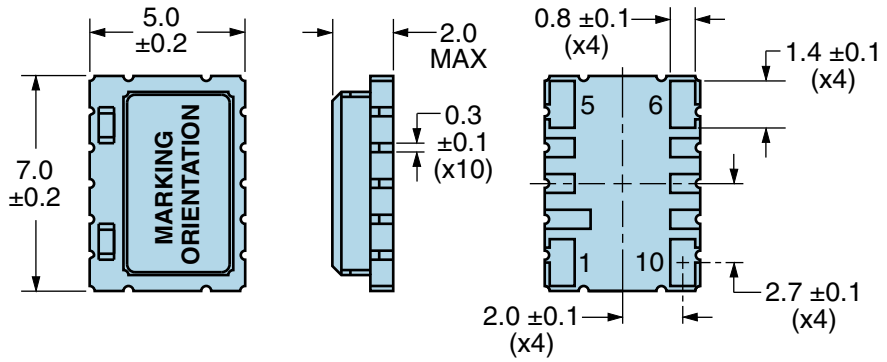

PIN	CONNECTION
1	No Connect
2	Do Not Connect
3	Do Not Connect
4	Do Not Connect
5	Case/Ground
6	Output
7	Do Not Connect
8	Do Not Connect
9	Do Not Connect
10	Supply Voltage

LINE	MARKING
1	**E10.000** *E=Ecliptek*
2	**XXYZZ** *XX=Ecliptek Manufacturing Code* *Y=Last Digit of the Year* *ZZ=Week of the Year*

Suggested Solder Pad Layout

All Dimensions in Millimeters

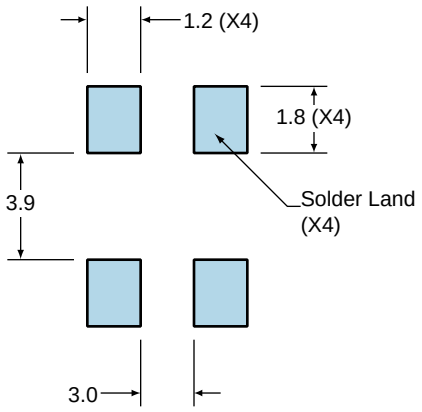

All Tolerances are ±0.1

OUTPUT WAVEFORM

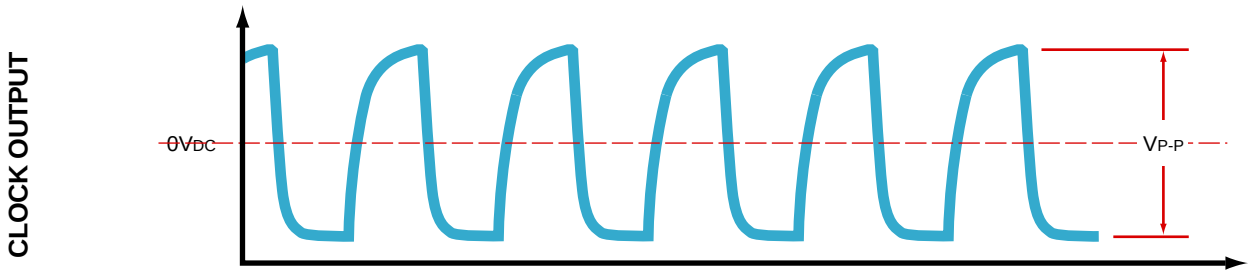

Test Circuit for No Connect Option

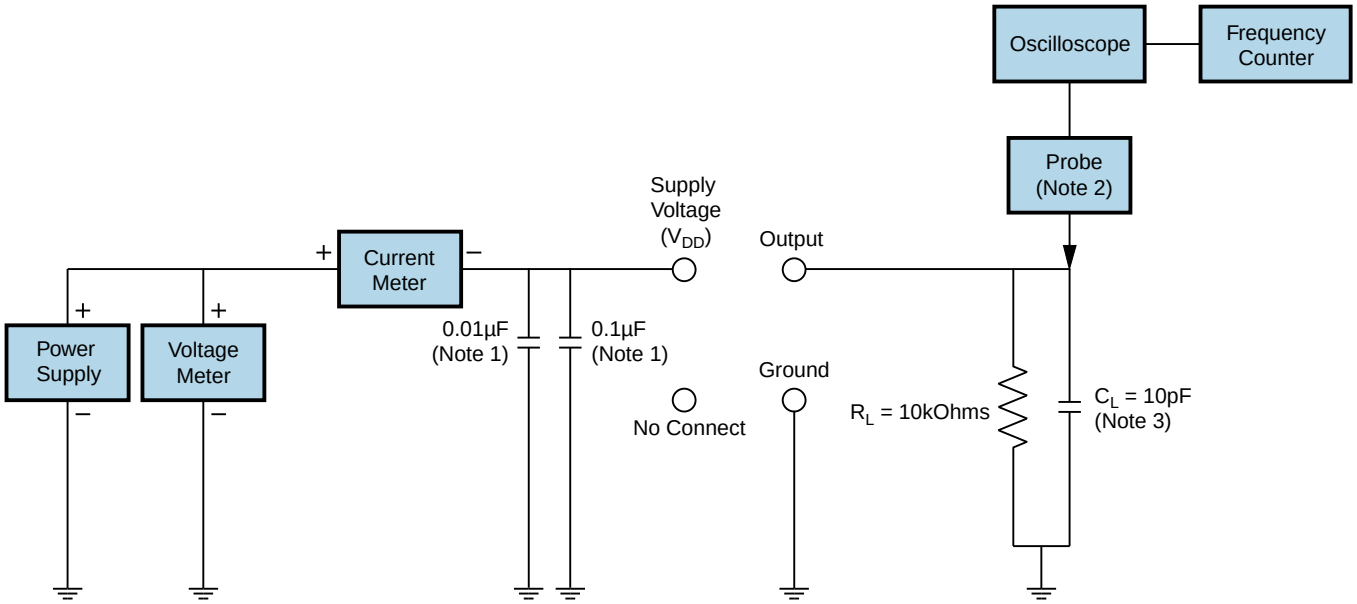

Note 1: An external 0.1µF low frequency tantalum bypass capacitor in parallel with a 0.01µF high frequency ceramic bypass capacitor close to the package ground and V_{DD} pin is required.
Note 2: A low capacitance (<12pF), 10X attenuation factor, high impedance (>10Mohms), and high bandwidth (>300MHz) passive probe is recommended.
Note 3: Capacitance value C_L includes sum of all probe and fixture capacitance.

Recommended Solder Reflow Methods

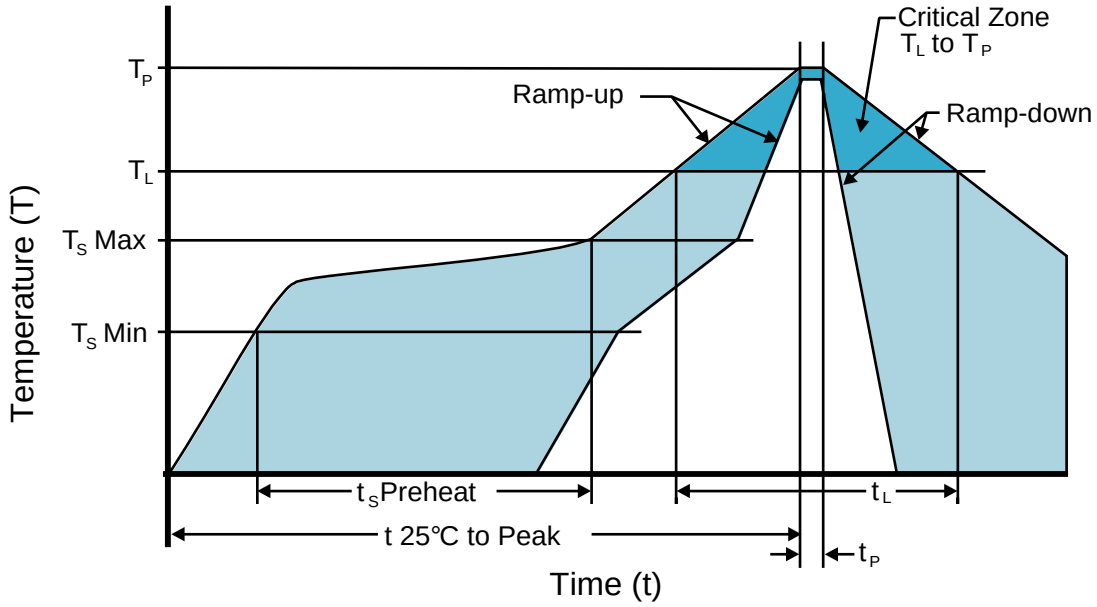

Low Temperature Infrared/Convection 220°C

T_S MAX to T_L (Ramp-up Rate)	5°C/second Maximum
Preheat	
- Temperature Minimum (T_S MIN)	N/A
- Temperature Typical (T_S TYP)	150°C
- Temperature Maximum (T_S MAX)	N/A
- Time (t_S MIN)	60 - 120 Seconds
Ramp-up Rate (T_L to T_P)	5°C/second Maximum
Time Maintained Above:	
- Temperature (T_L)	150°C
- Time (t_L)	200 Seconds Maximum
Peak Temperature (T_P)	220°C Maximum
Target Peak Temperature (T_P Target)	220°C Maximum 1 Time / 215°C Maximum 1 Time
Time within 5°C of actual peak (t_p)	15 seconds Maximum 1 Time / 80 seconds Maximum 1 Time
Ramp-down Rate	5°C/second Maximum
Time 25°C to Peak Temperature (t)	N/A
Moisture Sensitivity Level	Level 1

Low Temperature Manual Soldering

185°C Maximum for 10 seconds Maximum, 2 times Maximum.

High Temperature Manual Soldering

260°C Maximum for 5 seconds Maximum, 2 times Maximum.