NX3L2G66

Dual low-ohmic single-pole single-throw analog switch

Rev. 04 — 28 August 2009 Product data sheet

1. General description

The NX3L2G66 provides two low-ohmic single pole single throw analog switch functions. Each switch has two input/output terminals (nY and nZ) and an active HIGH enable input (nE). When pin nE is LOW, the analog switch is turned off.

Schmitt-trigger action at the enable input (nE) makes the circuit tolerant to slower input rise and fall times across the entire V_{CC} range from 1.4 V to 4.3 V.

The NX3L2G66 allows signals with amplitude up to V_{CC} to be transmitted from nY to nZ; or from nZ to nY. Its low ON resistance (0.5 Ω) and flatness (0.13 Ω) ensures minimal attenuation and distortion of transmitted signals.

2. Features

- Wide supply voltage range from 1.4 V to 4.3 V
- Very low ON resistance (peak):
  - 1.6 Ω (typical) at V_{CC} = 1.4 V
  - 1.0 Ω (typical) at V_{CC} = 1.65 V
  - 0.55 Ω (typical) at V_{CC} = 2.3 V
  - 0.50 Ω (typical) at V_{CC} = 2.7 V
  - 0.50 Ω (typical) at V_{CC} = 4.3 V
- High noise immunity
- ESD protection:
  - HBM JESD22-A114E Class 3A exceeds 7500 V
  - MM JESD22-A115-A exceeds 200 V
  - CDM AEC-Q100-011 revision B exceeds 1000 V
- CMOS low-power consumption
- Latch-up performance exceeds 100 mA per JESD 78 Class II Level A
- Direct interface with TTL levels at 3.0 V
- Control input accepts voltages above supply voltage
- High current handling capability (350 mA continuous current under 3.3 V supply)
- Specified from –40 °C to +85 °C and from –40 °C to +125 °C

3. Applications

- Cell phone
- PDA
- Portable media player

founded by Philips

4. Ordering information

Table 1. Ordering information

Type number	Package			
	Temperature range	Name	Description	Version
NX3L2G66GT	–40 °C to +125 °C	XSON8	plastic extremely thin small outline package; no leads; 8 terminals; body 1 × 1.95 × 0.5 mm	SOT833-1
NX3L2G66GD	–40 °C to +125 °C	XSON8U	plastic extremely thin small outline package; no leads; 8 terminals; UTLP based; body 3 × 2 × 0.5 mm	SOT996-2
NX3L2G66GM	–40 °C to +125 °C	XQFN8U	plastic extremely thin quad flat package; no leads; 8 terminals; UTLP based; body 1.6 × 1.6 × 0.5 mm	SOT902-1

5. Marking

Table 2. Marking codes[1]

Type number	Marking code
NX3L2G66GT	D66
NX3L2G66GD	D66
NX3L2G66GM	D66

[1] The pin 1 indicator is located on the lower left corner of the device, below the marking code.

6. Functional diagram

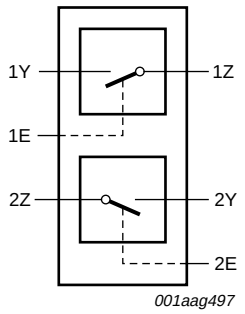

Fig 1. Logic symbol

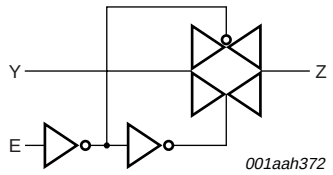

Fig 2. Logic diagram (one switch)

© NXP B.V. 2009. All rights reserved.

7. Pinning information

7.1 Pinning

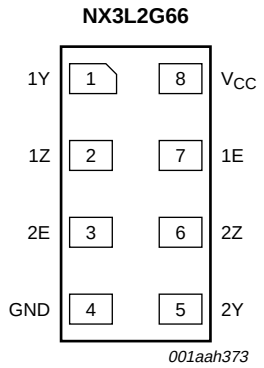

Transparent top view

Fig 3. Pin configuration SOT833-1 (XSON8)

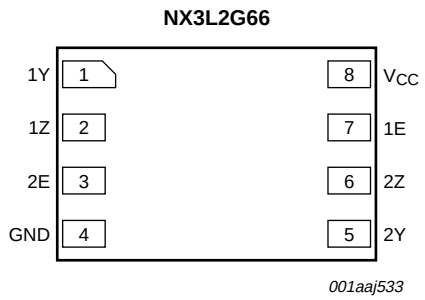

Transparent top view

Fig 4. Pin configuration SOT996-2 (XSON8U)

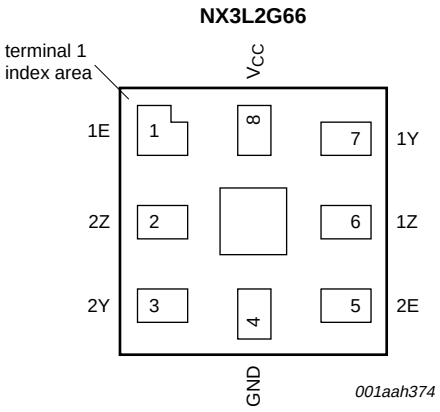

Transparent top view

Fig 5. Pin configuration SOT902-1 (XQFN8U)

© NXP B.V. 2009. All rights reserved.

7.2 Pin description

Table 3. Pin description

Symbol	Pin		Description
	SOT833-1 and SOT996-2	SOT902-1	
1Y, 2Y	1, 5	7, 3	independent input or output
1Z, 2Z	2, 6	6, 2	independent input or output
GND	4	4	ground (0 V)
1E, 2E	7, 3	1, 5	enable input (active HIGH)
V_{CC}	8	8	supply voltage

8. Functional description

Table 4. Function table[1]

Input nE	Switch
L	OFF-state
H	ON-state

[1] H = HIGH voltage level; L = LOW voltage level.

9. Limiting values

Table 5. Limiting values

In accordance with the Absolute Maximum Rating System (IEC 60134). Voltages are referenced to GND (ground = 0 V).

Symbol	Parameter	Conditions		Min	Max	Unit
V_{CC}	supply voltage			–0.5	+4.6	V
V_I	input voltage	enable input nE	[1]	–0.5	+4.6	V
V_{SW}	switch voltage		[2]	–0.5	V_{CC} + 0.5	V
I_{IK}	input clamping current	V_I < –0.5 V		–50	-	mA
I_{SK}	switch clamping current	V_I < –0.5 V or V_I > V_{CC} + 0.5 V		-	±50	mA
I_{SW}	switch current	V_{SW} > –0.5 V or V_{SW} < V_{CC} + 0.5 V; source or sink current		-	±350	mA
		V_{SW} > –0.5 V or V_{SW} < V_{CC} + 0.5 V; pulsed at 1 ms duration, < 10 % duty cycle; peak current		-	±500	mA
T_{stg}	storage temperature			–65	+150	°C
P_{tot}	total power dissipation	T_{amb} = –40 °C to +125 °C	[3]	-	250	mW

[1] The minimum input voltage rating may be exceeded if the input current rating is observed.

[2] The minimum and maximum switch voltage ratings may be exceeded if the switch clamping current rating is observed but may not exceed 4.6 V.

[3] For XSON8, XSON8U and XQFN8U packages: above 118 °C the value of P_{tot} derates linearly with 7.8 mW/K.

© NXP B.V. 2009. All rights reserved.

10. Recommended operating conditions

Table 6. Recommended operating conditions

Symbol	Parameter	Conditions		Min	Typ	Max	Unit
V_{CC}	supply voltage			1.4	-	4.3	V
V_I	input voltage	enable input nE		0	-	4.3	V
V_{SW}	switch voltage		[1]	0	-	V_{CC}	V
T_{amb}	ambient temperature			–40	-	+125	°C
$\Delta t/\Delta V$	input transition rise and fall rate	V_{CC} = 1.4 V to 4.3 V	[2]	-	-	200	ns/V

[1] To avoid sinking GND current from terminal nZ when switch current flows in terminal nY, the voltage drop across the bidirectional switch must not exceed 0.4 V. If the switch current flows into terminal nZ, no GND current will flow from terminal nY. In this case, there is no limit for the voltage drop across the switch.

[2] Applies to control signal levels.

11. Static characteristics

Table 7. Static characteristics

At recommended operating conditions; voltages are referenced to GND (ground 0 V).

Symbol	Parameter	Conditions	25 °C			–40 °C to +125 °C			Unit
			Min	Typ	Max	Min	Max (85 °C)	Max (125 °C)	
V_{IH}	HIGH-level input voltage	V_{CC} = 1.4 V to 1.95 V	0.65V_{CC}	-	-	0.65V_{CC}	-	-	V
		V_{CC} = 2.3 V to 2.7 V	1.7	-	-	1.7	-	-	V
		V_{CC} = 2.7 V to 3.6 V	2.0	-	-	2.0	-	-	V
		V_{CC} = 3.6 V to 4.3 V	0.7V_{CC}	-	-	0.7V_{CC}	-	-	V
V_{IL}	LOW-level input voltage	V_{CC} = 1.4 V to 1.95 V	-	-	0.35V_{CC}	-	0.35V_{CC}	0.35V_{CC}	V
		V_{CC} = 2.3 V to 2.7 V	-	-	0.7	-	0.7	0.7	V
		V_{CC} = 2.7 V to 3.6 V	-	-	0.8	-	0.8	0.8	V
		V_{CC} = 3.6 V to 4.3 V	-	-	0.3V_{CC}	-	0.3V_{CC}	0.3V_{CC}	V
I_I	input leakage current	enable input nE; V_I = GND to 4.3 V; V_{CC} = 1.4 V to 4.3 V	-	-	-	-	±0.5	±1	μA
$I_{S(OFF)}$	OFF-state leakage current	nY port; see Figure 6							
		V_{CC} = 1.4 V to 3.6 V	-	-	±5	-	±50	±500	nA
		V_{CC} = 3.6 V to 4.3 V	-	-	±10	-	±50	±500	nA
$I_{S(ON)}$	ON-state leakage current	nZ port; see Figure 7							
		V_{CC} = 1.4 V to 3.6 V	-	-	±5	-	±50	±500	nA
		V_{CC} = 3.6 V to 4.3 V	-	-	±10	-	±50	±500	nA
I_{CC}	supply current	V_I = V_{CC} or GND; V_{SW} = GND or V_{CC}							
		V_{CC} = 3.6 V	-	-	100	-	690	6000	nA
		V_{CC} = 4.3 V	-	-	150	-	800	7000	nA

© NXP B.V. 2009. All rights reserved.

Table 7. Static characteristics *...continued*

At recommended operating conditions; voltages are referenced to GND (ground 0 V).

Symbol	Parameter	Conditions	25 °C			–40 °C to +125 °C			Unit
			Min	Typ	Max	Min	Max (85 °C)	Max (125 °C)	
C_I	input capacitance		-	1.0	-	-	-	-	pF
$C_{S(OFF)}$	OFF-state capacitance		-	35	-	-	-	-	pF
$C_{S(ON)}$	ON-state capacitance		-	110	-	-	-	-	pF

11.1 Test circuits

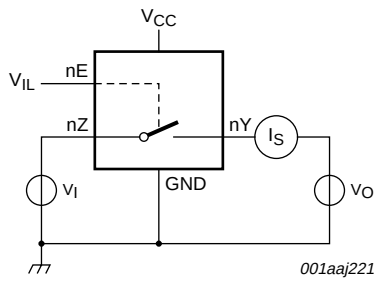

V_I = 0.3 V or V_{CC} – 0.3 V; V_O = V_{CC} – 0.3 V or 0.3 V.

Fig 6. Test circuit for measuring OFF-state leakage current

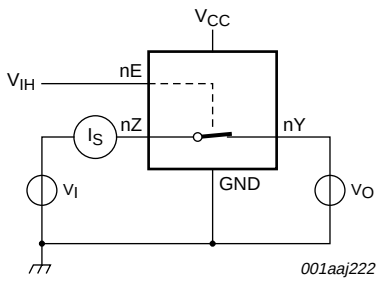

V_I = 0.3 V or V_{CC} – 0.3 V; V_O = open circuit.

Fig 7. Test circuit for measuring ON-state leakage current

11.2 ON resistance

Table 8. ON resistance

At recommended operating conditions; voltages are referenced to GND (ground = 0 V); for graphs see Figure 9 to Figure 15.

Symbol	Parameter	Conditions	–40 °C to +85 °C			–40 °C to +125 °C		Unit
			Min	Typ[1]	Max	Min	Max	
$R_{ON(peak)}$	ON resistance (peak)	V_I = GND to V_{CC}; I_{SW} = 100 mA; see Figure 8						
		V_{CC} = 1.4 V	-	1.6	3.7	-	4.1	Ω
		V_{CC} = 1.65 V	-	1.0	1.6	-	1.7	Ω
		V_{CC} = 2.3 V	-	0.55	0.8	-	0.9	Ω
		V_{CC} = 2.7 V	-	0.5	0.75	-	0.9	Ω
		V_{CC} = 4.3 V	-	0.5	0.75	-	0.9	Ω

© NXP B.V. 2009. All rights reserved.

Table 8. ON resistance *...continued*

At recommended operating conditions; voltages are referenced to GND (ground = 0 V); for graphs see Figure 9 to Figure 15.

Symbol	Parameter	Conditions		–40 °C to +85 °C			–40 °C to +125 °C		Unit
				Min	Typ[1]	Max	Min	Max	
ΔR_{ON}	ON resistance mismatch between channels	V_I = GND to V_{CC}; I_{SW} = 100 mA	[2]						
		V_{CC} = 1.4 V		-	0.04	0.3	-	0.3	Ω
		V_{CC} = 1.65 V		-	0.04	0.2	-	0.3	Ω
		V_{CC} = 2.3 V		-	0.02	0.08	-	0.1	Ω
		V_{CC} = 2.7 V		-	0.02	0.075	-	0.1	Ω
		V_{CC} = 4.3 V		-	0.02	0.075	-	0.1	Ω
$R_{ON(flat)}$	ON resistance (flatness)	V_I = GND to V_{CC}; I_{SW} = 100 mA	[3]						
		V_{CC} = 1.4 V		-	1.0	3.3	-	3.6	Ω
		V_{CC} = 1.65 V		-	0.5	1.2	-	1.3	Ω
		V_{CC} = 2.3 V		-	0.15	0.3	-	0.35	Ω
		V_{CC} = 2.7 V		-	0.13	0.3	-	0.35	Ω
		V_{CC} = 4.3 V		-	0.2	0.4	-	0.45	Ω

[1] Typical values are measured at T_{amb} = 25 °C.

[2] Measured at identical V_{CC}, temperature and input voltage.

[3] Flatness is defined as the difference between the maximum and minimum value of ON resistance measured at identical V_{CC} and temperature.

© NXP B.V. 2009. All rights reserved.

11.3 ON resistance test circuit and graphs

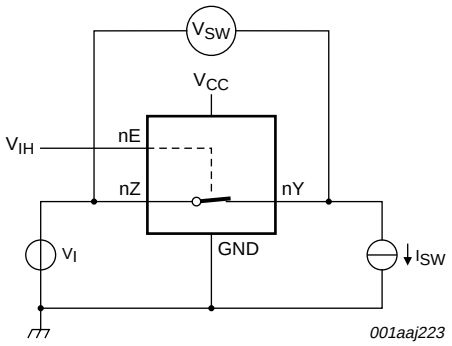

$R_{ON} = V_{SW} / I_{SW}$.

Fig 8. Test circuit for measuring ON resistance

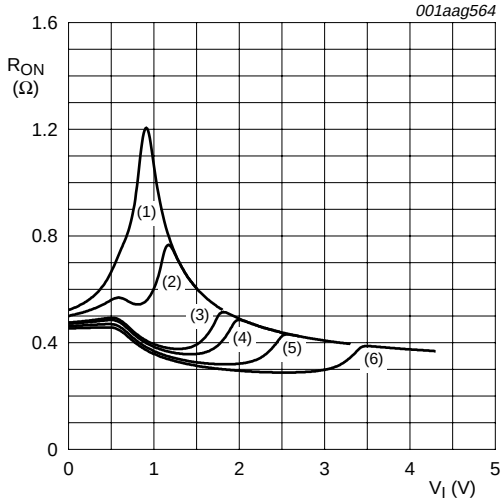

(1) V_{CC} = 1.5 V.
(2) V_{CC} = 1.8 V.
(3) V_{CC} = 2.5 V.
(4) V_{CC} = 2.7 V.
(5) V_{CC} = 3.3 V.
(6) V_{CC} = 4.3 V.
Measured at T_{amb} = 25 °C.

Fig 9. Typical ON resistance as a function of input voltage

© NXP B.V. 2009. All rights reserved.

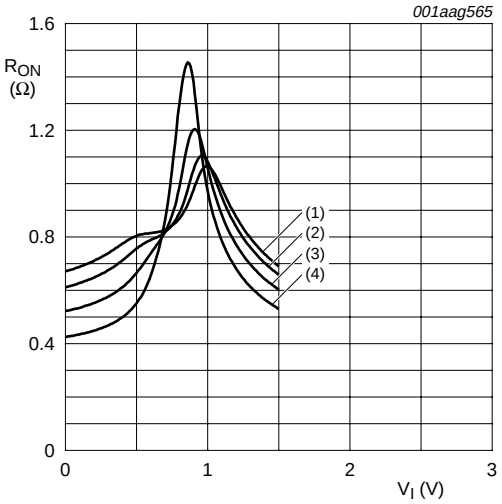

(1) T_{amb} = 125 °C.

(2) T_{amb} = 85 °C.

(3) T_{amb} = 25 °C.

(4) T_{amb} = –40 °C.

Fig 10. ON resistance as a function of input voltage; V_{CC} = 1.5 V

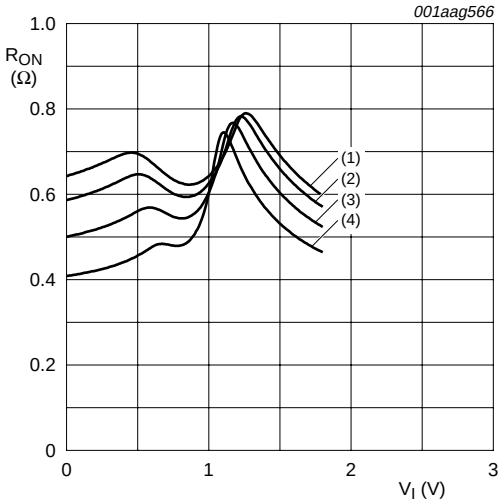

(1) T_{amb} = 125 °C.

(2) T_{amb} = 85 °C.

(3) T_{amb} = 25 °C.

(4) T_{amb} = –40 °C.

Fig 11. ON resistance as a function of input voltage; V_{CC} = 1.8 V

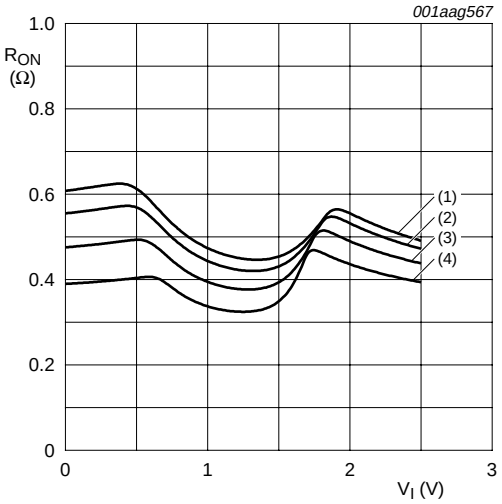

(1) T_{amb} = 125 °C.

(2) T_{amb} = 85 °C.

(3) T_{amb} = 25 °C.

(4) T_{amb} = –40 °C.

Fig 12. ON resistance as a function of input voltage; V_{CC} = 2.5 V

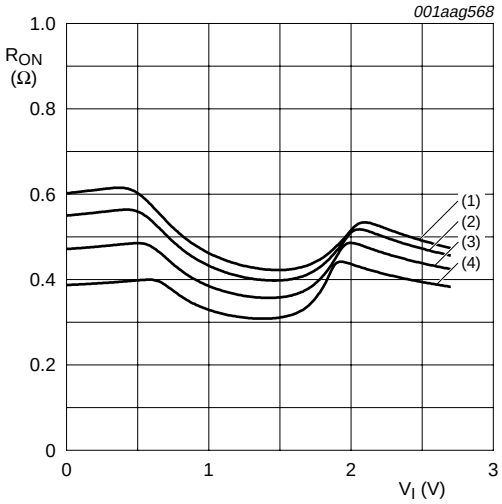

(1) T_{amb} = 125 °C.

(2) T_{amb} = 85 °C.

(3) T_{amb} = 25 °C.

(4) T_{amb} = –40 °C.

Fig 13. ON resistance as a function of input voltage; V_{CC} = 2.7 V

© NXP B.V. 2009. All rights reserved.

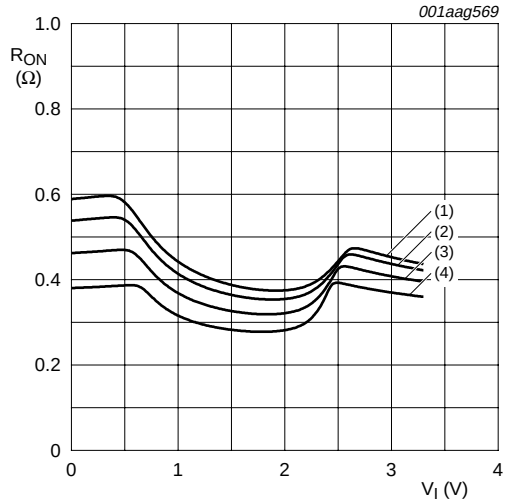

(1) T_{amb} = 125 °C.
(2) T_{amb} = 85 °C.
(3) T_{amb} = 25 °C.
(4) T_{amb} = –40 °C.

Fig 14. ON resistance as a function of input voltage; V_{CC} = 3.3 V

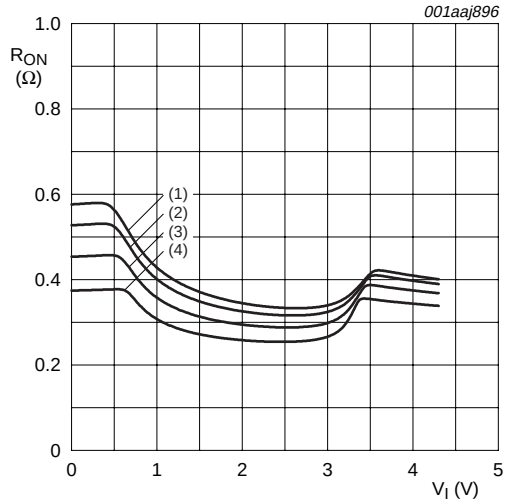

(1) T_{amb} = 125 °C.
(2) T_{amb} = 85 °C.
(3) T_{amb} = 25 °C.
(4) T_{amb} = –40 °C.

Fig 15. ON resistance as a function of input voltage; V_{CC} = 4.3 V

12. Dynamic characteristics

Table 9. Dynamic characteristics

At recommended operating conditions; voltages are referenced to GND (ground = 0 V); for load circuit see Figure 17.

Symbol	Parameter	Conditions	25 °C			–40 °C to +125 °C			Unit
			Min	Typ[1]	Max	Min	Max (85 °C)	Max (125 °C)	
t_{en}	enable time	nE to nZ or nY; see Figure 16							
		V_{CC} = 1.4 V to 1.6 V	-	27	41	-	43	48	ns
		V_{CC} = 1.65 V to 1.95 V	-	22	33	-	34	36	ns
		V_{CC} = 2.3 V to 2.7 V	-	17	26	-	27	30	ns
		V_{CC} = 2.7 V to 3.6 V	-	14	23	-	24	26	ns
		V_{CC} = 3.6 V to 4.3 V	-	14	23	-	24	26	ns
t_{dis}	disable time	nE to nZ or nY; see Figure 16							
		V_{CC} = 1.4 V to 1.6 V	-	9	18	-	19	21	ns
		V_{CC} = 1.65 V to 1.95 V	-	7	13	-	14	15	ns
		V_{CC} = 2.3 V to 2.7 V	-	4	8	-	9	10	ns
		V_{CC} = 2.7 V to 3.6 V	-	4	8	-	8	9	ns
		V_{CC} = 3.6 V to 4.3 V	-	4	8	-	8	9	ns

[1] Typical values are measured at T_{amb} = 25 °C and V_{CC} = 1.5 V, 1.8 V, 2.5 V, 3.3 V and 4.3 V respectively.

© NXP B.V. 2009. All rights reserved.

12.1 Waveform and test circuits

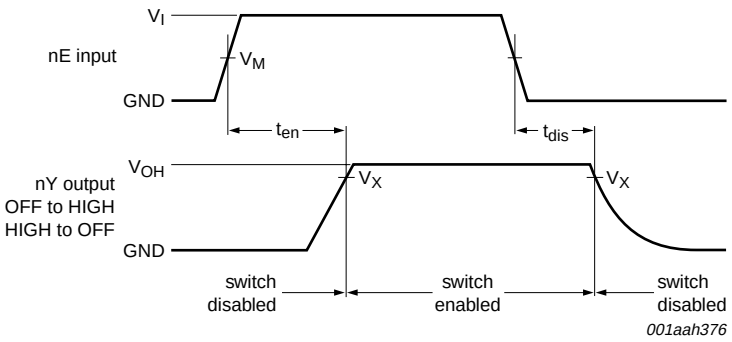

Measurement points are given in Table 10.

Logic level: V_{OH} is the typical output voltage level that occurs with the output load.

Fig 16. Enable and disable times

Table 10. Measurement points

Supply voltage	Input	Output
V_{CC}	V_M	V_X
1.4 V to 4.3 V	$0.5V_{CC}$	$0.9V_{OH}$

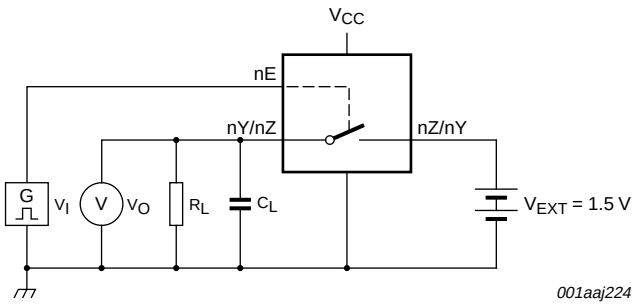

Test data is given in Table 11.

Definitions for test circuit:

R_L = load resistance.

C_L = load capacitance including jig and probe capacitance.

V_{EXT} = external voltage for measuring switching times.

Fig 17. Load circuit for switching times

Table 11. Test data

Supply voltage	Input		Load	
V_{CC}	V_I	t_r, t_f	C_L	R_L
1.4 V to 4.3 V	V_{CC}	≤ 2.5 ns	35 pF	50 Ω

© NXP B.V. 2009. All rights reserved.

12.2 Additional dynamic characteristics

Table 12. Additional dynamic characteristics

At recommended operating conditions; voltages are referenced to GND (ground = 0 V); V_I = GND or V_{CC} (unless otherwise specified); $t_r = t_f \leq 2.5$ ns.

Symbol	Parameter	Conditions		25 °C			Unit
				Min	Typ	Max	
THD	total harmonic distortion	f_i = 20 Hz to 20 kHz; R_L = 32 Ω; see Figure 18	[1]				
		V_{CC} = 1.4 V; V_I = 1 V (p-p)		-	0.15	-	%
		V_{CC} = 1.65 V; V_I = 1.2 V (p-p)		-	0.10	-	%
		V_{CC} = 2.3 V; V_I = 1.5 V (p-p)		-	0.02	-	%
		V_{CC} = 2.7 V; V_I = 2 V (p-p)		-	0.02	-	%
		V_{CC} = 4.3 V; V_I = 2 V (p-p)		-	0.02	-	%
$f_{(-3dB)}$	–3 dB frequency response	R_L = 50 Ω; see Figure 19	[1]				
		V_{CC} = 1.4 V to 4.3 V		-	60	-	MHz
α_{iso}	isolation (OFF-state)	f_i = 100 kHz; R_L = 50 Ω; see Figure 20	[1]				
		V_{CC} = 1.4 V to 4.3 V		-	–90	-	dB
V_{ct}	crosstalk voltage	between digital inputs and switch; f_i = 1 MHz; C_L = 50 pF; R_L = 50 Ω; see Figure 21					
		V_{CC} = 1.4 V to 3.6 V		-	0.2	-	V
		V_{CC} = 3.6 V to 4.3 V		-	0.2	-	V
Xtalk	crosstalk	between switches; f_i = 100 kHz; R_L = 50 Ω; see Figure 22	[1]				
		V_{CC} = 1.4 V to 4.3 V		-	–90	-	dB
Q_{inj}	charge injection	f_i = 1 MHz; C_L = 0.1 nF; R_L = 1 MΩ; V_{gen} = 0 V; R_{gen} = 0 Ω; see Figure 23					
		V_{CC} = 1.5 V		-	3	-	pC
		V_{CC} = 1.8 V		-	3	-	pC
		V_{CC} = 2.5 V		-	3	-	pC
		V_{CC} = 3.3 V		-	3	-	pC
		V_{CC} = 4.3 V		-	6	-	pC

[1] f_i is biased at $0.5V_{CC}$.

12.3 Test circuits

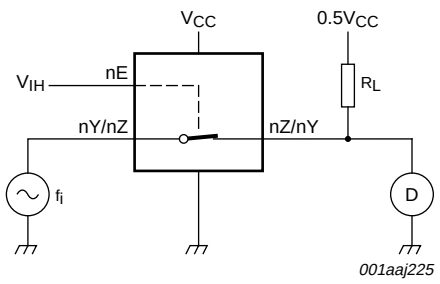

Fig 18. Test circuit for measuring total harmonic distortion

© NXP B.V. 2009. All rights reserved.

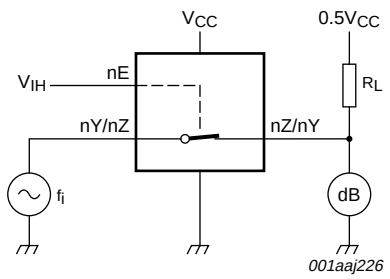

Adjust f_i voltage to obtain 0 dBm level at output. Increase f_i frequency until dB meter reads –3 dB.

Fig 19. Test circuit for measuring the frequency response when channel is in ON-state

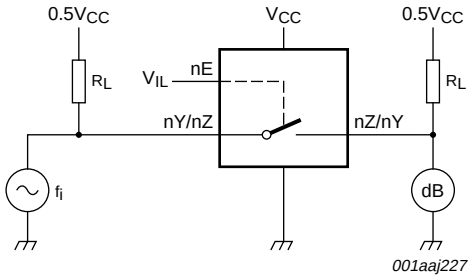

Adjust f_i voltage to obtain 0 dBm level at input.

Fig 20. Test circuit for measuring isolation (OFF-state)

© NXP B.V. 2009. All rights reserved.

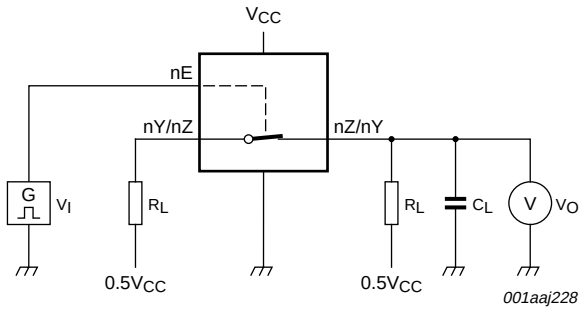

a. Test circuit

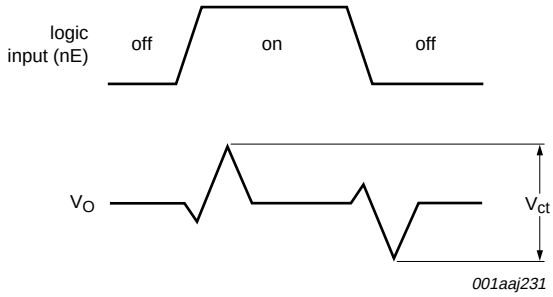

b. Input and output pulse definitions

Fig 21. Test circuit for measuring crosstalk voltage between digital inputs and switch

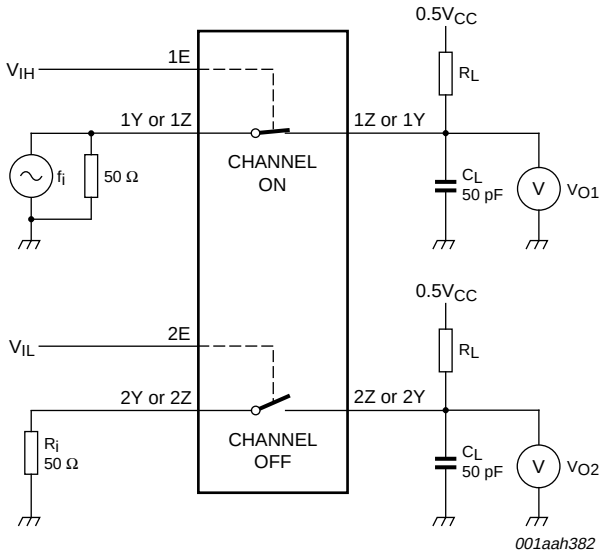

$20 \log_{10} (V_{O2} / V_{O1})$ or $20 \log_{10} (V_{O1} / V_{O2})$.

Fig 22. Test circuit for measuring crosstalk between switches

© NXP B.V. 2009. All rights reserved.

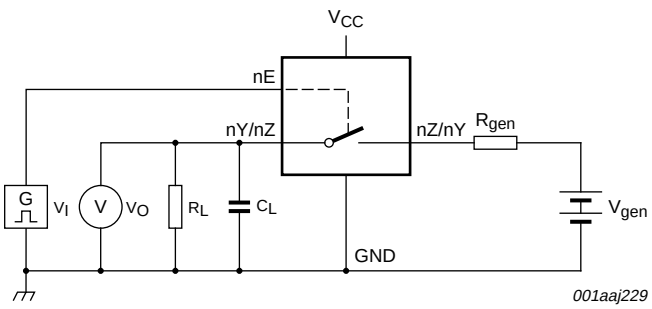

a. Test circuit

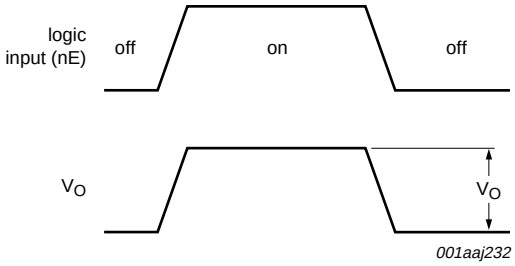

b. Input and output pulse definitions

Definition: $Q_{inj} = \Delta V_O \times C_L$.

ΔV_O = output voltage variation.

R_{gen} = generator resistance.

V_{gen} = generator voltage.

Fig 23. Test circuit for measuring charge injection

© NXP B.V. 2009. All rights reserved.

13. Package outline

XSON8: plastic extremely thin small outline package; no leads; 8 terminals; body 1 x 1.95 x 0.5 mm **SOT833-1**

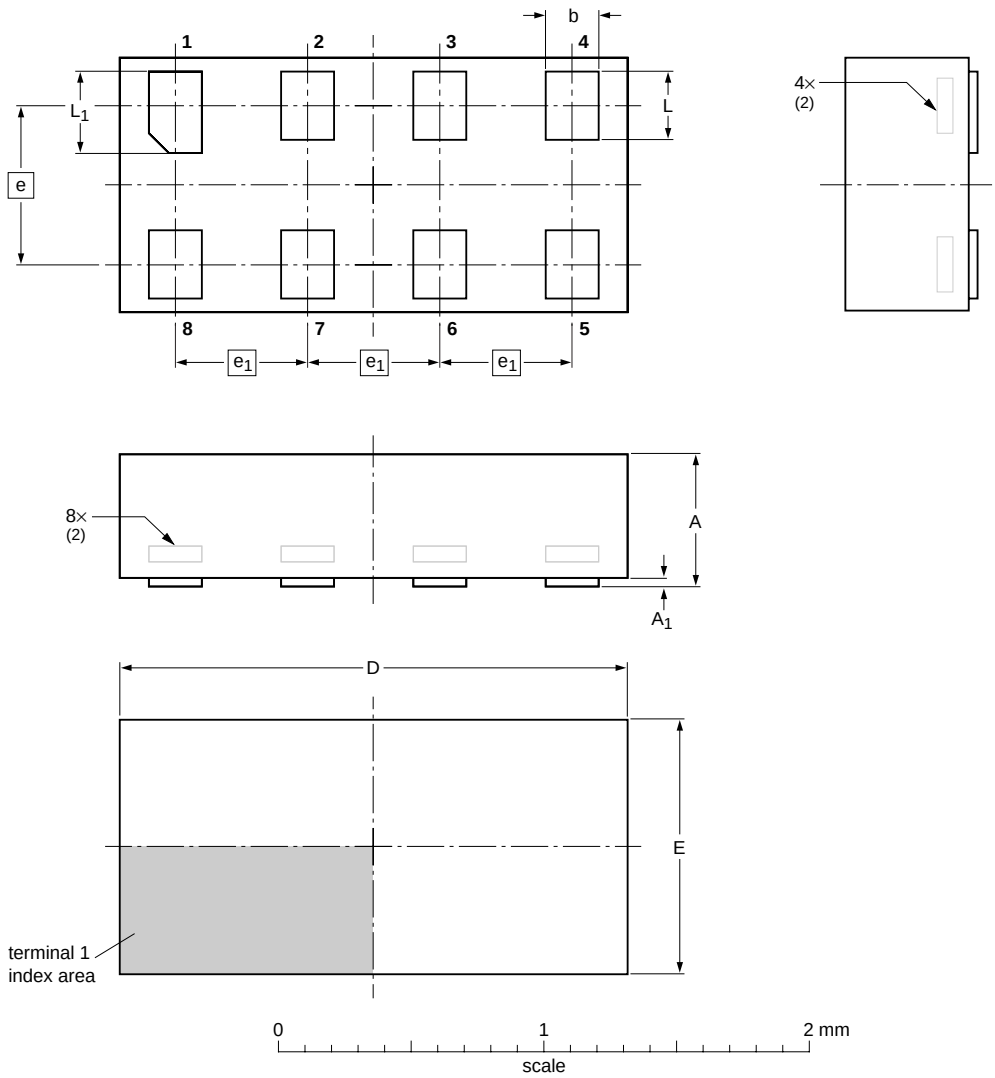

DIMENSIONS (mm are the original dimensions)

UNIT	A(1) max	A_1 max	b	D	E	e	e_1	L	L_1
mm	0.5	0.04	0.25 0.17	2.0 1.9	1.05 0.95	0.6	0.5	0.35 0.27	0.40 0.32

Notes

1. Including plating thickness.
2. Can be visible in some manufacturing processes.

OUTLINE VERSION	REFERENCES				EUROPEAN PROJECTION	ISSUE DATE
	IEC	JEDEC	JEITA			
SOT833-1	- - -	MO-252	- - -			~~07-11-14~~ 07-12-07

Fig 24. Package outline SOT833-1 (XSON8)

© NXP B.V. 2009. All rights reserved.

XSON8U: plastic extremely thin small outline package; no leads; 8 terminals; UTLP based; body 3 x 2 x 0.5 mm **SOT996-2**

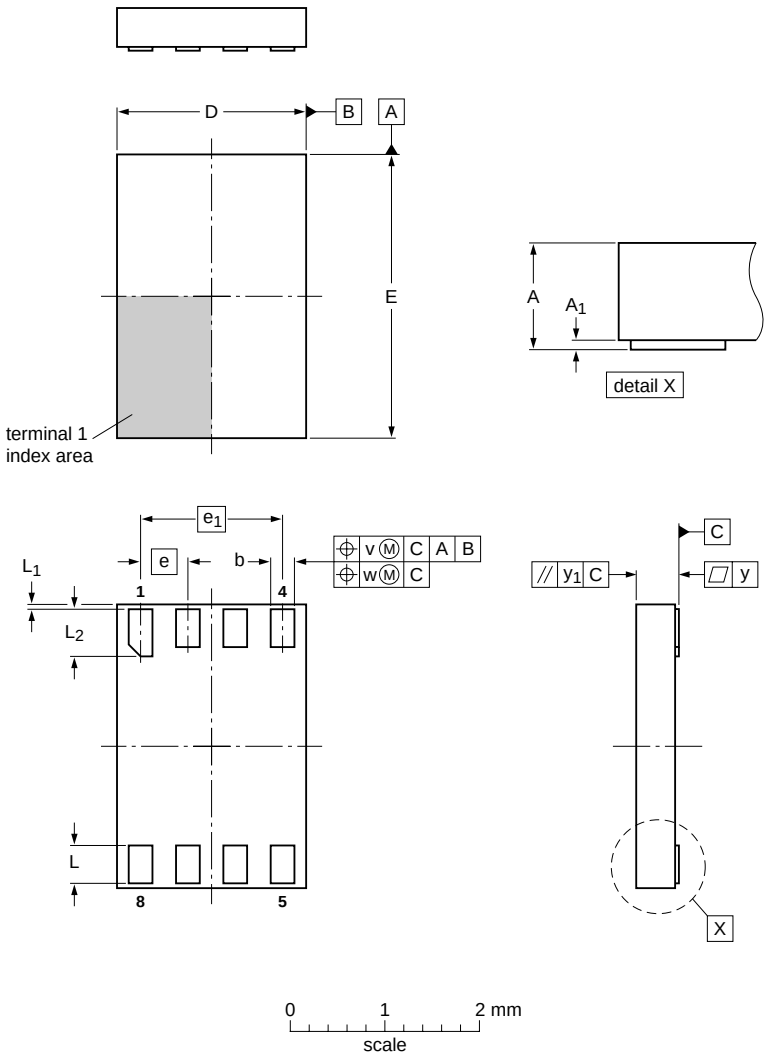

DIMENSIONS (mm are the original dimensions)

UNIT	A max	A_1	b	D	E	e	e_1	L	L_1	L_2	v	w	y	y_1
mm	0.5	0.05 0.00	0.35 0.15	2.1 1.9	3.1 2.9	0.5	1.5	0.5 0.3	0.15 0.05	0.6 0.4	0.1	0.05	0.05	0.1

OUTLINE VERSION	REFERENCES				EUROPEAN PROJECTION	ISSUE DATE
	IEC	JEDEC	JEITA			
SOT996-2	- - -		- - -			~~07-12-18~~ 07-12-21

Fig 25. Package outline SOT996-2 (XSON8U)

© NXP B.V. 2009. All rights reserved.

XQFN8U: plastic extremely thin quad flat package; no leads; 8 terminals; UTLP based; body 1.6 x 1.6 x 0.5 mm **SOT902-1**

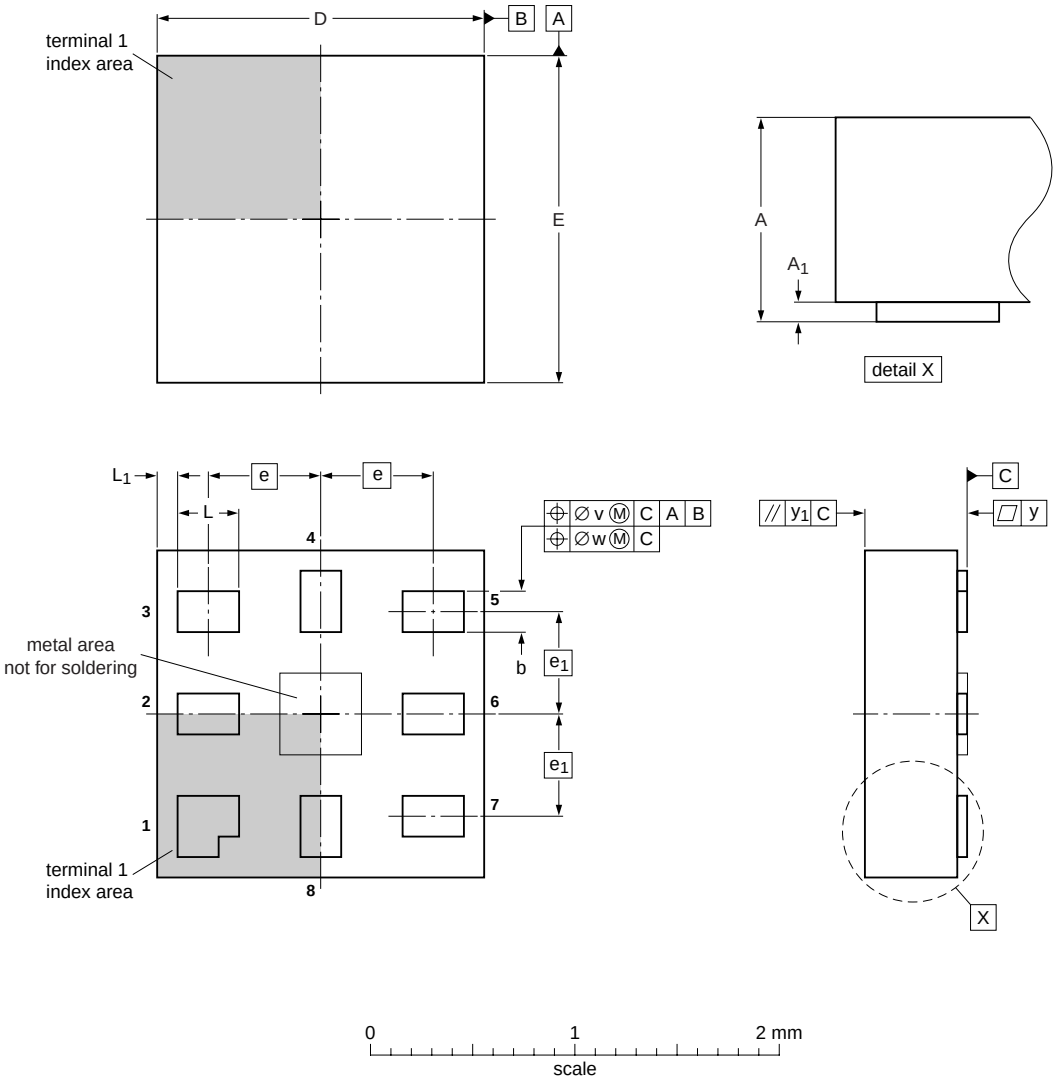

DIMENSIONS (mm are the original dimensions)

UNIT	A max	A_1	b	D	E	e	e_1	L	L_1	v	w	y	y_1
mm	0.5	0.05 0.00	0.25 0.15	1.65 1.55	1.65 1.55	0.55	0.5	0.35 0.25	0.15 0.05	0.1	0.05	0.05	0.05

OUTLINE VERSION	REFERENCES				EUROPEAN PROJECTION	ISSUE DATE
	IEC	JEDEC	JEITA			
SOT902-1	- - -	MO-255	- - -			~~05-11-25~~ 07-11-14

Fig 26. Package outline SOT902-1 (XQFN8U)

© NXP B.V. 2009. All rights reserved.

14. Abbreviations

Table 13. Abbreviations

Acronym	Description
CDM	Charged Device Model
CMOS	Complementary Metal Oxide Semiconductor
ESD	ElectroStatic Discharge
HBM	Human Body Model
MM	Machine Model
TTL	Transistor-Transistor Logic

15. Revision history

Table 14. Revision history

Document ID	Release date	Data sheet status	Change notice	Supersedes
NX3L2G66_4	20090828	Product data sheet	-	NX3L2G66_3
Modifications:	• Figure 7 “Test circuit for measuring ON-state leakage current” updated. • Table 8 “ON resistance”: $R_{ON(flat)}$ values for V_{CC} = 4.3 V updated.			
NX3L2G66_3	20090409	Product data sheet	-	NX3L2G66_2
NX3L2G66_2	20090326	Product data sheet	-	NX3L2G66_1
NX3L2G66_1	20080131	Product data sheet	-	-

© NXP B.V. 2009. All rights reserved.

16. Legal information

16.1 Data sheet status

Document status[1][2]	Product status[3]	Definition
Objective [short] data sheet	Development	This document contains data from the objective specification for product development.
Preliminary [short] data sheet	Qualification	This document contains data from the preliminary specification.
Product [short] data sheet	Production	This document contains the product specification.

[1] Please consult the most recently issued document before initiating or completing a design.

[2] The term 'short data sheet' is explained in section "Definitions".

[3] The product status of device(s) described in this document may have changed since this document was published and may differ in case of multiple devices. The latest product status information is available on the Internet at URL http://www.nxp.com.

16.2 Definitions

Draft — The document is a draft version only. The content is still under internal review and subject to formal approval, which may result in modifications or additions. NXP Semiconductors does not give any representations or warranties as to the accuracy or completeness of information included herein and shall have no liability for the consequences of use of such information.

Short data sheet — A short data sheet is an extract from a full data sheet with the same product type number(s) and title. A short data sheet is intended for quick reference only and should not be relied upon to contain detailed and full information. For detailed and full information see the relevant full data sheet, which is available on request via the local NXP Semiconductors sales office. In case of any inconsistency or conflict with the short data sheet, the full data sheet shall prevail.

16.3 Disclaimers

General — Information in this document is believed to be accurate and reliable. However, NXP Semiconductors does not give any representations or warranties, expressed or implied, as to the accuracy or completeness of such information and shall have no liability for the consequences of use of such information.

Right to make changes — NXP Semiconductors reserves the right to make changes to information published in this document, including without limitation specifications and product descriptions, at any time and without notice. This document supersedes and replaces all information supplied prior to the publication hereof.

Suitability for use — NXP Semiconductors products are not designed, authorized or warranted to be suitable for use in medical, military, aircraft, space or life support equipment, nor in applications where failure or malfunction of an NXP Semiconductors product can reasonably be expected to result in personal injury, death or severe property or environmental damage. NXP Semiconductors accepts no liability for inclusion and/or use of NXP Semiconductors products in such equipment or applications and therefore such inclusion and/or use is at the customer's own risk.

Applications — Applications that are described herein for any of these products are for illustrative purposes only. NXP Semiconductors makes no representation or warranty that such applications will be suitable for the specified use without further testing or modification.

Limiting values — Stress above one or more limiting values (as defined in the Absolute Maximum Ratings System of IEC 60134) may cause permanent damage to the device. Limiting values are stress ratings only and operation of the device at these or any other conditions above those given in the Characteristics sections of this document is not implied. Exposure to limiting values for extended periods may affect device reliability.

Terms and conditions of sale — NXP Semiconductors products are sold subject to the general terms and conditions of commercial sale, as published at http://www.nxp.com/profile/terms, including those pertaining to warranty, intellectual property rights infringement and limitation of liability, unless explicitly otherwise agreed to in writing by NXP Semiconductors. In case of any inconsistency or conflict between information in this document and such terms and conditions, the latter will prevail.

No offer to sell or license — Nothing in this document may be interpreted or construed as an offer to sell products that is open for acceptance or the grant, conveyance or implication of any license under any copyrights, patents or other industrial or intellectual property rights.

Export control — This document as well as the item(s) described herein may be subject to export control regulations. Export might require a prior authorization from national authorities.

16.4 Trademarks

Notice: All referenced brands, product names, service names and trademarks are the property of their respective owners.

17. Contact information

For more information, please visit: **http://www.nxp.com**

For sales office addresses, please send an email to: **salesaddresses@nxp.com**

© NXP B.V. 2009. All rights reserved.

18. Contents

1 General description 1
2 Features 1
3 Applications 1
4 Ordering information 2
5 Marking 2
6 Functional diagram 2
7 Pinning information 3
7.1 Pinning 3
7.2 Pin description 4
8 Functional description 4
9 Limiting values 4
10 Recommended operating conditions 5
11 Static characteristics 5
11.1 Test circuits 6
11.2 ON resistance 6
11.3 ON resistance test circuit and graphs 8
12 Dynamic characteristics 10
12.1 Waveform and test circuits 11
12.2 Additional dynamic characteristics 12
12.3 Test circuits 12
13 Package outline 16
14 Abbreviations 19
15 Revision history 19
16 Legal information 20
16.1 Data sheet status 20
16.2 Definitions 20
16.3 Disclaimers 20
16.4 Trademarks 20
17 Contact information 20
18 Contents 21

Please be aware that important notices concerning this document and the product(s) described herein, have been included in section 'Legal information'.

founded by PHILIPS

© NXP B.V. 2009. All rights reserved.

For more information, please visit: http://www.nxp.com
For sales office addresses, please send an email to: salesaddresses@nxp.com

Date of release: 28 August 2009
Document identifier: NX3L2G66_4