2348/2301/2506

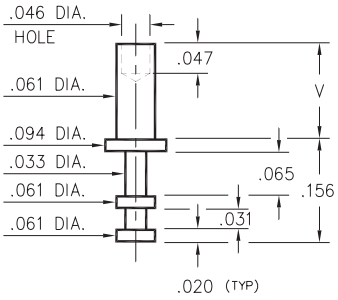

2348-X-00-XX-00-00-07-0
Swage mount in .064 hole

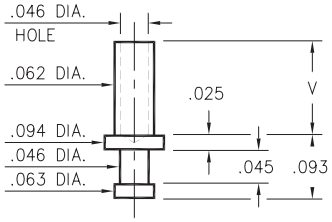

2301-X-00-XX-00-00-07-0
Swage mount in .067 hole

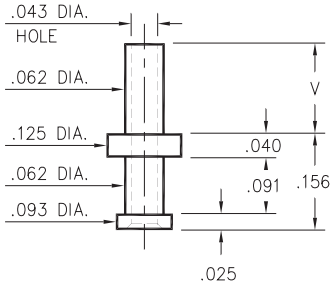

2506-X-00-XX-00-00-07-0
Swage mount in .067 hole

- X -	Board Thick-ness	Length V
1	.031	.053
2	.062	.084
3	.094	.115
4	.125	.147

2310

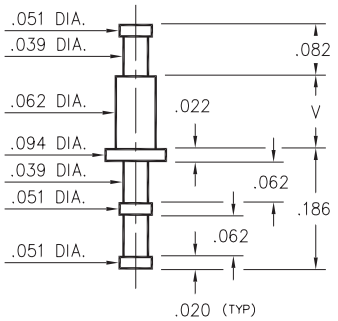

2310-X-00-XX-00-00-07-0
Swage mount in .067 hole

- X -	Board Thick-ness	Length V
1	.031	.053
2	.062	.082
3	.094	.113
4	.125	.145

2505

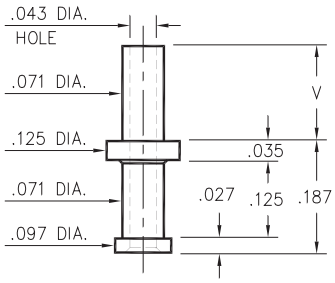

2505-X-00-XX-00-00-07-0
Swage mount in .076 hole

- X -	Board Thick-ness	Length V
1	.031	.062
2	.062	.093
3	.094	.125
4	.125	.156

2325/2355/2365

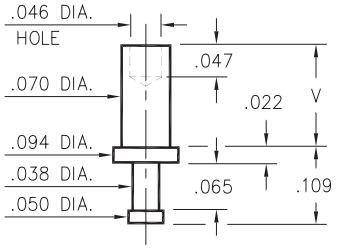

2325-X-00-XX-00-00-07-0
Swage mount in .073 hole

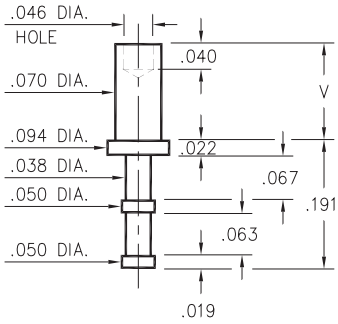

2355-X-00-XX-00-00-07-0
Swage mount in .073 hole

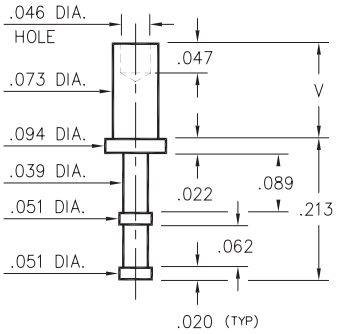

2365-X-00-XX-00-00-07-0
Swage mount in .076 hole

- X -	Board Thick-ness	Length V
1	.031	.053
2	.062	.084
3	.094	.115
4	.125	.147

SPECIFICATIONS

PIN MATERIAL:
Brass Alloy 360, 1/2 Hard
Swage pins are annealed

DIMENSION IN INCHES
TOLERANCES ON:
LENGTHS: ±.005
DIAMETERS: ±.002
ANGLES: ± 2°

ORDER CODE: 2XXX - X - 00 - XX - 00 - 00 - 07 - 0

BASIC PART #

SPECIFY PIN FINISH:
01 200μ" TIN/LEAD OVER NICKEL
80 200μ" TIN OVER NICKEL ◇
44 300μ" SILVER OVER COPPER ◇
50 300μ" ELECTRO-SOLDER (60/40 SnPb)

RoHS 2002/95/EC