DRAWING MADE IN THIRD ANGLE PROJECTION

THIS DRAWING IS UNPUBLISHED. RELEASED FOR PUBLICATION ,1988 .
© COPYRIGHT 1988 BY AMP INCORPORATED. ALL INTERNATIONAL RIGHTS RESERVED.

5327 LOC DF DIST F0

P	F	ZONE	LTR	DESCRIPTION	DATE	APPD
			C	REV PER 0600-0297-93 TA	12-22-93	DG
			D	REV PER 0600-3448-95 TA	1-17-96	DG
			E	REV PER 0600-5123-96 TA	4-11-96	DG

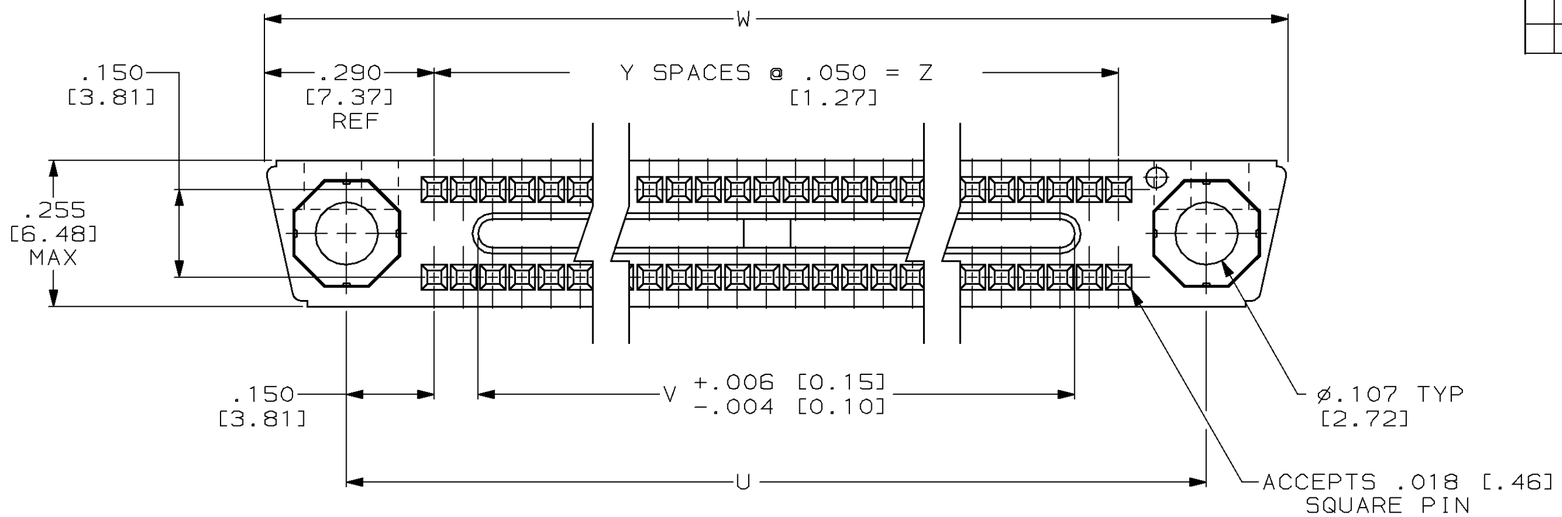

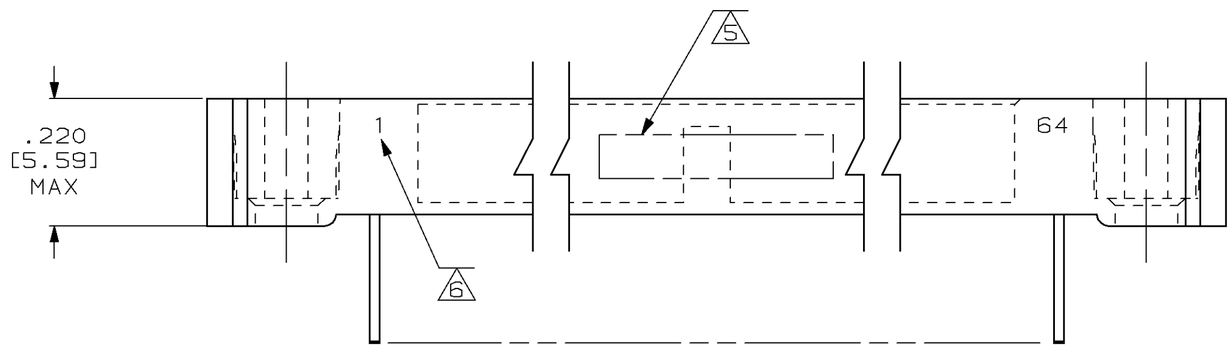

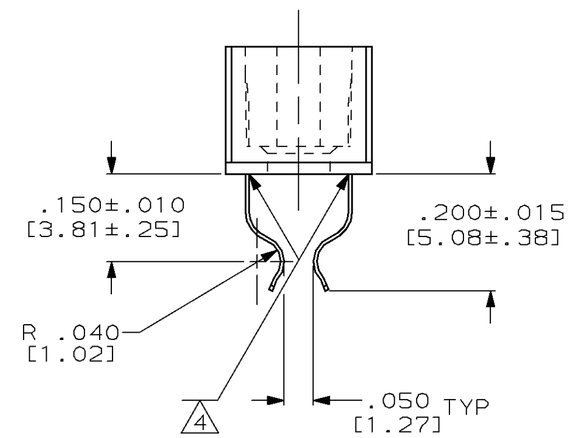

534171

CONTACT IDENT NUMBERS	Z	Y	W	V	U	NUMBER OF CONTACTS	PART NUMBER
1 - 10	.450 [11.43]	9	1.040 [26.42]	.300 [7.62]	.750 [19.05]	20	1-534171-1
1 - 15	.700 [17.78]	14	1.290 [32.77]	.550 [13.97]	1.000 [25.40]	30	1-534171-0
1 - 20	.950 [24.13]	19	1.540 [39.12]	.800 [20.32]	1.250 [31.75]	40	534171-9
1 - 25	1.200 [30.48]	24	1.790 [45.47]	1.050 [26.67]	1.500 [38.10]	50	534171-8
1 - 30	1.450 [36.83]	29	2.040 [51.82]	1.300 [33.02]	1.750 [44.45]	60	534171-7
1 - 35	1.700 [43.18]	34	2.290 [58.17]	1.550 [39.37]	2.000 [50.80]	70	534171-6
1 - 40	1.950 [49.53]	39	2.540 [64.52]	1.800 [45.72]	2.250 [57.15]	80	534171-5
1 - 45	2.200 [55.88]	44	2.790 [70.87]	2.050 [52.07]	2.500 [63.50]	90	534171-4
1 - 50	2.450 [62.23]	49	3.040 [77.22]	2.300 [58.42]	2.750 [69.85]	100	534171-3
1 - 55	2.700 [68.58]	54	3.290 [83.57]	2.550 [64.77]	3.000 [76.20]	110	534171-2
1 - 64	3.150 [80.01]	63	3.740 [95.00]	3.000 [76.20]	3.450 [87.63]	128	534171-1

1. HOUSING MATERIAL: LIQUID CRYSTAL POLYMER PER MIL-M-24519, GLCP-30F; COLOR: GRAY.
2. CONTACT MATERIAL: BERYLLIUM COPPER.
3. CONTACT FINISH: .000050 GOLD IN CONTACT AREA, GOLD FLASH OVER REMAINDER OF CONTACT. BOTH OVER NICKEL.
4. THIN BEAD OF EPOXY ADDED FOR CONTACT RETENTION.
5. AMP,PART NO. & DATE CODE MARKED THIS APPROXIMATE AREA.
6. NUMBERS OF END POSITIONS MARKED ONE SIDE ONLY (SEE TABLE).
7. MECHANICAL FIXTURING REQUIRED TO SECURE ASSEMBLY TO P.C. BOARD.

DO NOT SCALE PRINT.
UNLESS SPECIFIED
DIMENSIONS IN INCHES
TOLERANCES ON :
2 PLC DEC ± ——
3 PLC DEC ± .005 [.13]
ANGLES ± ——

MATERIAL 1 2

FINISH 3

DR 11-21-91 T. ALEXANDER
CHK 1-3-92 D. GUTTER
APPD 1-3-92 D. GUTTER
APPD 1-7-92 T. ALEXANDER
PRODUCT SPEC –
APPLICATION SPEC –
WEIGHT –

AMP INCORPORATED
Harrisburg, Pa. 17105

NAME
RECEPTACLE ASSEMBLY,MINI-BOX, STD. COMMERCIAL PART, LOW FORCE CONTACTS, CARD EXTENDER

SIZE C | FSCM NO 00779 | DRAWING NO 534171
SCALE 5:1 | SHEET 1 OF 1

CUSTOMER DRAWING

AMP 1471-6 REV 3-87

11-APR-96 17:01:10 amp34874 /home/amp34874/edmmod