THIS DRAWING IS UNPUBLISHED. RELEASED FOR PUBLICATION 2004.
© COPYRIGHT 2004 BY TYCO ELECTRONICS CORPORATION. ALL RIGHTS RESERVED.

LOC	DIST
J	

REVISIONS

P	LTR	DESCRIPTION	DATE	DWN	APVD
	B	REVISED (ECR-05-010056)	31AUG05	L.Z	S.Y

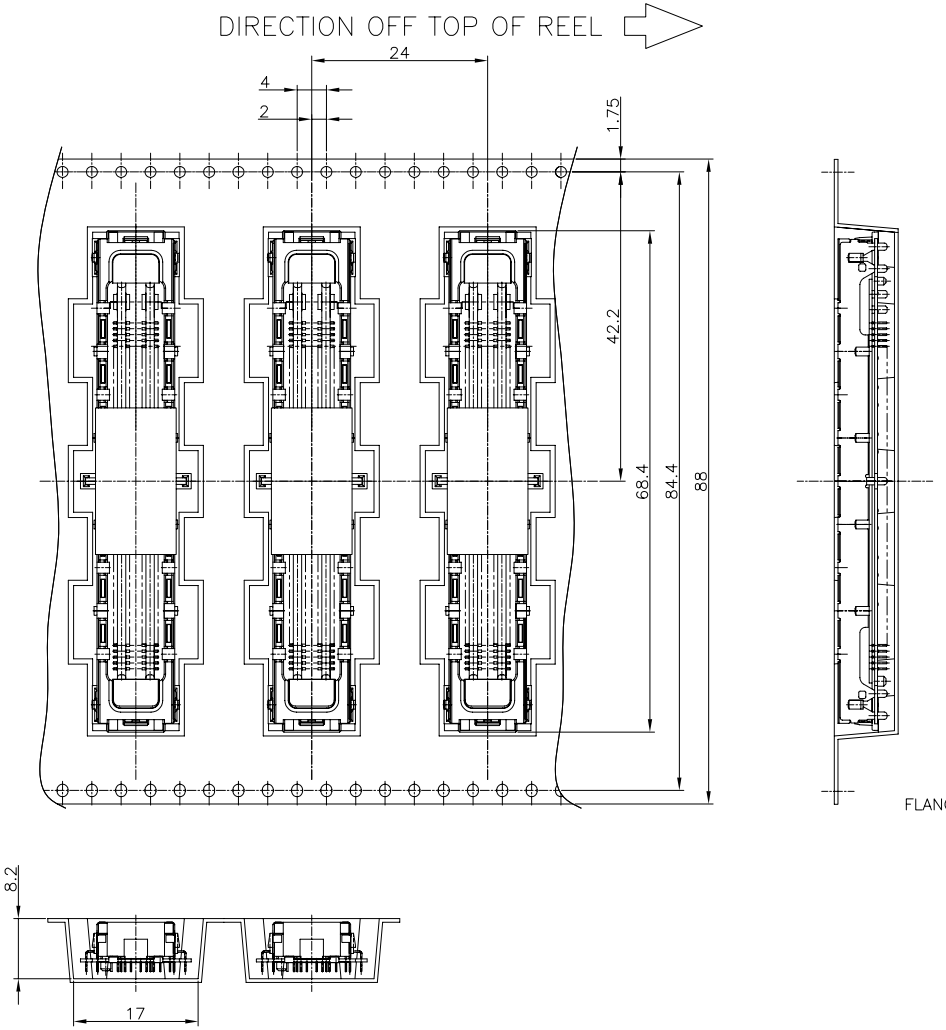

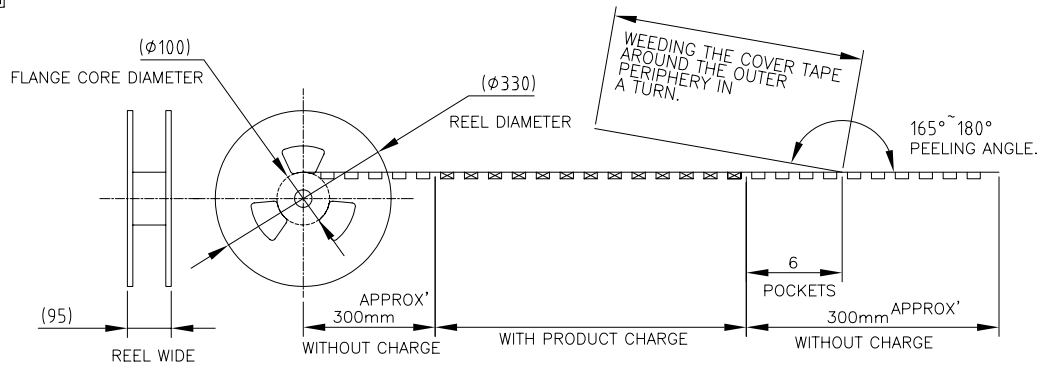

200EA/REEL	1827258-1
QTY	P/N

THIS DRAWING IS A CONTROLLED DOCUMENT.

DIMENSIONS: MM

TOLERANCES UNLESS OTHERWISE SPECIFIED:
0 PLC ± 0~10 : ±0.2
1 PLC ± 30~10 : ±0.25
2 PLC ± 100~30 : ±0.3
3 PLC ±
4 PLC
ANGLES ± 3

MATERIAL 1

FINISH 2

DWN	T.KAWAMAE	22NOV04
CHK	I.ENOMOTO	22NOV04
APVD	I.ENOMOTO	22NOV04
PRODUCT SPEC	108-5742	
APPLICATION SPEC		
WEIGHT		

tyco Electronics — Tyco Electronics AMP K.K. Kawasaki,Japan

NAME: EMBOSS ASSEMBLY 0.8 DOCKING CONNECTOR PLUG (240P + POWER 2P)

SIZE	CAGE CODE	DRAWING NO	RESTRICTED TO
A2	00779	C-1827258	—

CUSTOMER DRAWING | SCALE NTS | SHEET 1 OF 3 | REV B

1827258

AMP 1471-9 REV 31MAR2000

fj028532

THIS DRAWING IS UNPUBLISHED. RELEASED FOR PUBLICATION 2004.
© COPYRIGHT 2004 BY TYCO ELECTRONICS CORPORATION. ALL RIGHTS RESERVED.

LOC	DIST
J	

REVISIONS

P	LTR	DESCRIPTION	DATE	DWN	APVD
	–	SEE SHEET 1	–	–	–

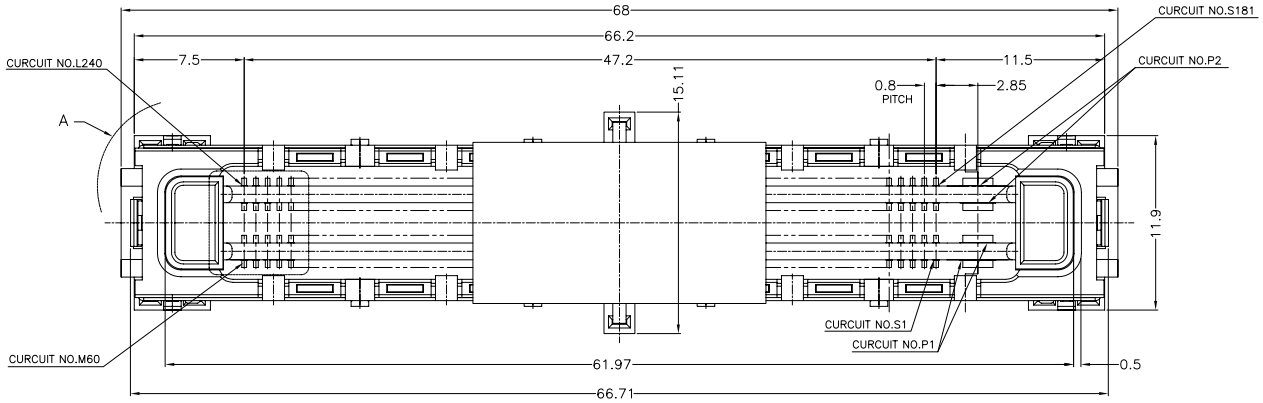

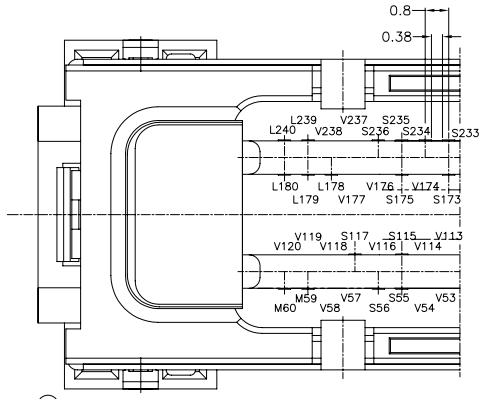

DETAIL A (SCALE 8:1)
(CONTACT POS. NO. ASSIGN, H12 IS EQUAL TO H5.5)

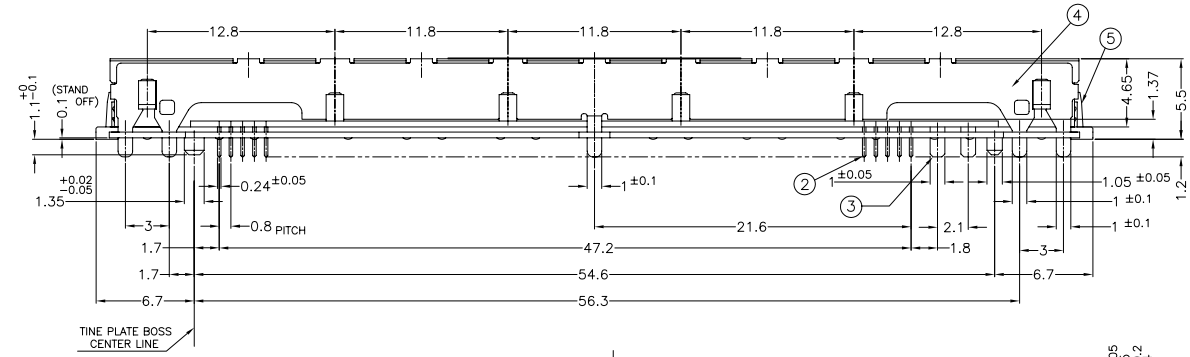

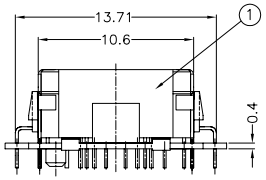

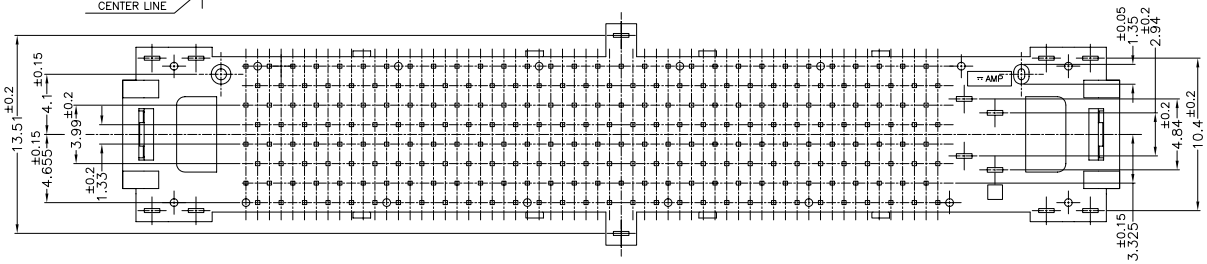

H12		
1	TINE PLATE, TYPE−1 (FOR H5.5)	5
1	G−PLATE LEFT, TYPE−1 (FOR H5.5)	4
4	POWER CONTACT (FOR H5.5)	3
225	SIGNAL CONTACT	2
1	HSG B (FOR H5.5)	1
	NAME	ITEM NO.

SIGNAL 218P
MODEM 2P
LAN 5P
VOID 15P
POWER 2P

THIS DRAWING IS A CONTROLLED DOCUMENT.

DIMENSIONS: MM

TOLERANCES UNLESS OTHERWISE SPECIFIED:
0 PLC ± 0~10 : ±0.2
1 PLC ± 30~10 : ±0.25
2 PLC ± 100~30 : ±0.3
3 PLC
4 PLC
ANGLES ± 3

MATERIAL 1
FINISH 2

DWN –
CHK –
APVD –
PRODUCT SPEC 108−5742
APPLICATION SPEC
WEIGHT 5.1 g

tyco Electronics
Tyco Electronics AMP K.K.
Kawasaki,Japan

NAME
0.8 DOCKING CONNECTOR
PLUG (240P + POWER 2P)

SIZE	CAGE CODE	DRAWING NO	RESTRICTED TO
A2	00779	C−1827258	

CUSTOMER DRAWING | SCALE 4:1 | SHEET 2 OF 3 | REV B

1827258

AMP 1471−9 REV 31MAR2000

– – fj028532

THIS DRAWING IS UNPUBLISHED. RELEASED FOR PUBLICATION 2000.
© COPYRIGHT 2000 BY TYCO ELECTRONICS CORPORATION. ALL RIGHTS RESERVED.

LOC	DIST
J	

REVISIONS

P	LTR	DESCRIPTION	DATE	DWN	APVD
	–	SEE SHEET 1	–	–	–

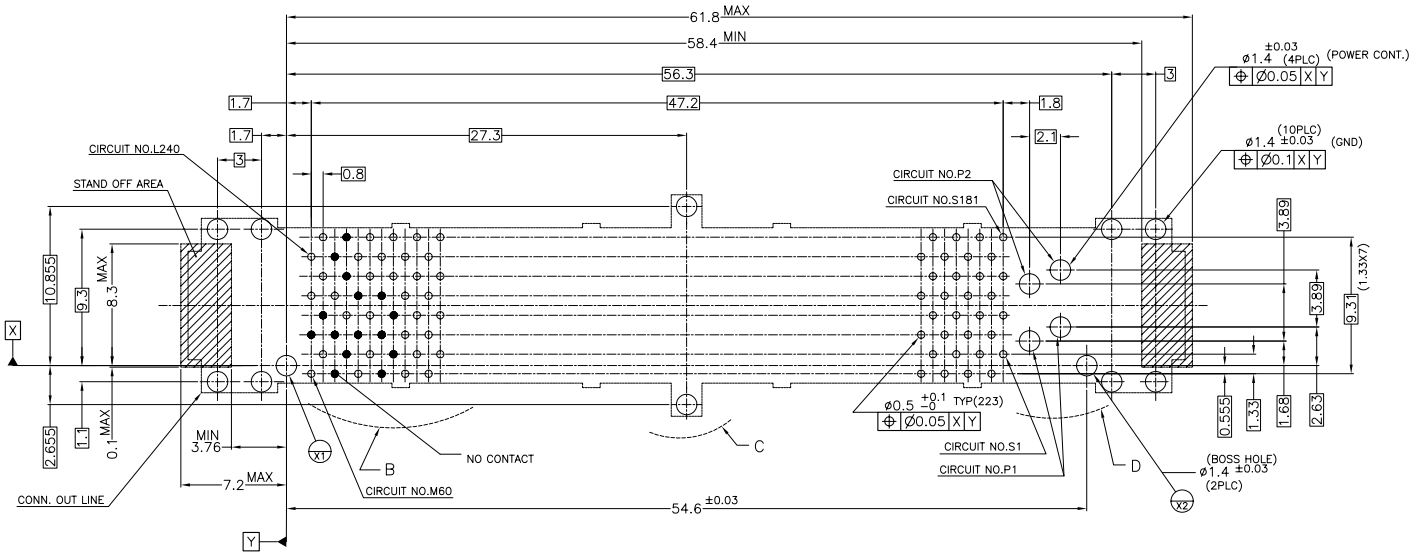

P.C.BOARD LAYOUT

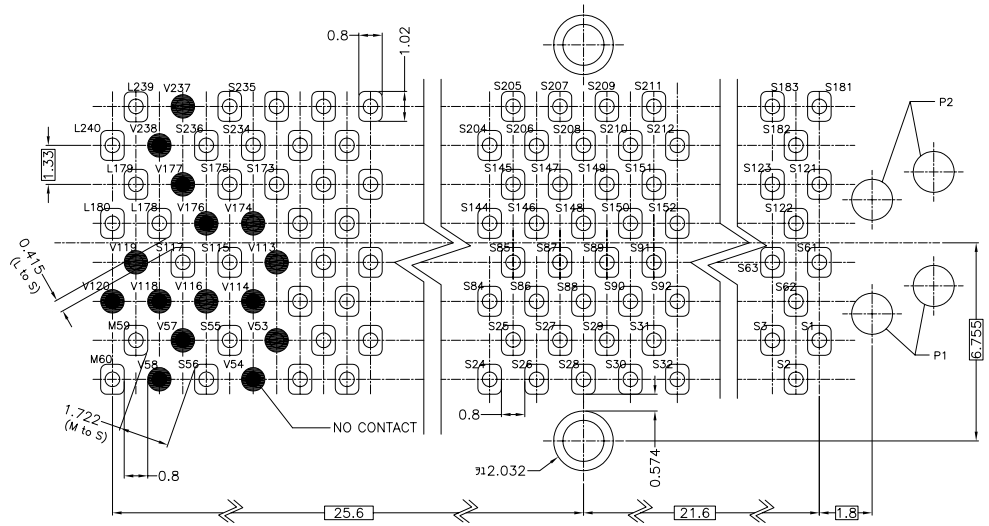

DETAIL B (SCALE 8:1)

DETAIL C (SCALE 8:1)

DETAIL D (SCALE 8:1)

NOTE

1. MATERIAL
   HOUSING : THERMOPLASTIC, UL94V−0, BLACK
   TINE PLATE : THERMOPLASTIC, UL94V−0, BLACK
   SIGNAL CONTACT: COPPER ALLOY
   POWER CONTACT : COPPER ALLOY
   GROUND PLATE : COPPER ALLOY
   ~~NUT : STAINLESS STEEL~~
2. FINISH
   SIGNAL CONTACT & POWER CONTACT
   Au Pl. ON CONTACT AREA
   Sn−Pb Pl. ON SOLDER AREA
   Ni UNDER Pl. ALL OVER
   GROUND PLATE
   Tin Pl. ALL OVER (REFLOW)
   Cu UNDER Pl. ALL OVER
3. ~~APPLICABLE THICKNESS OF P.C.BOARD :~~
4. CONNECTOR TO BE MATED :1674037−1, −2
5. ~~RECOMMENDED TIGHTENING TORQUE :FROM 0.15N・m(1.5kgf・cm) TO 0.2N・m(2kgf・cm)~~

1827258

THIS DRAWING IS A CONTROLLED DOCUMENT.

DIMENSIONS: MM

TOLERANCES UNLESS OTHERWISE SPECIFIED:
0 PLC ±
1 PLC ±
2 PLC ±
3 PLC ±
4 PLC ±
ANGLES ±

MATERIAL

FINISH

DWN –
CHK –
APVD –
PRODUCT SPEC
APPLICATION SPEC
WEIGHT

tyco Electronics
Tyco Electronics AMP K.K.
Kawasaki,Japan

NAME
0.8 DOCKING CONNECTOR
PLUG (240P + POWER 2P)

SIZE	CAGE CODE	DRAWING NO	RESTRICTED TO
A2	00779	C-1827258	

CUSTOMER DRAWING

SCALE 4:1 SHEET 3 OF 3 REV B