THIS DRAWING IS UNPUBLISHED. RELEASED FOR PUBLICATION , .
© COPYRIGHT BY TYCO ELECTRONICS CORPORATION. ALL RIGHTS RESERVED.

LOC	DIST
J	

REVISIONS
変更

P	LTR	DESCRIPTION	DATE	DWN	APVD
	K	REVISED FJB0-0267-03	09MAY03	T.T	H.M
	K1	REV PER ECO-10-000443	16JAN10	KK	AEG

注記
NOTE

1 嵌合相手製品型番及び、嵌合時寸法は
MATING COUNTER PART NUMBER AND DIMENSIONS
表-1 参照のこと。
AFTER MATING: SEE TABLE 1.

2 基板位置決め用ボス切断跡。
CUT MARK OF POSITIONER BOSS.

3 仕上げ：錫めっき(材料めっき)リフロー
FINISH ; PLI-TIN REFROW

4 仕上げ：ニッケル下地錫めっき(後めっき)
FINISH ; TIN PL.
Ni UNDER PL. ALL OVER

5 OBSOLETE PARTS: OBSOLETE CIS STREAMLINING
PER D.RENAUD/D.SINISI

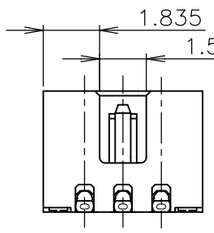

6極 6 Pos.
(SCALE 5:1)

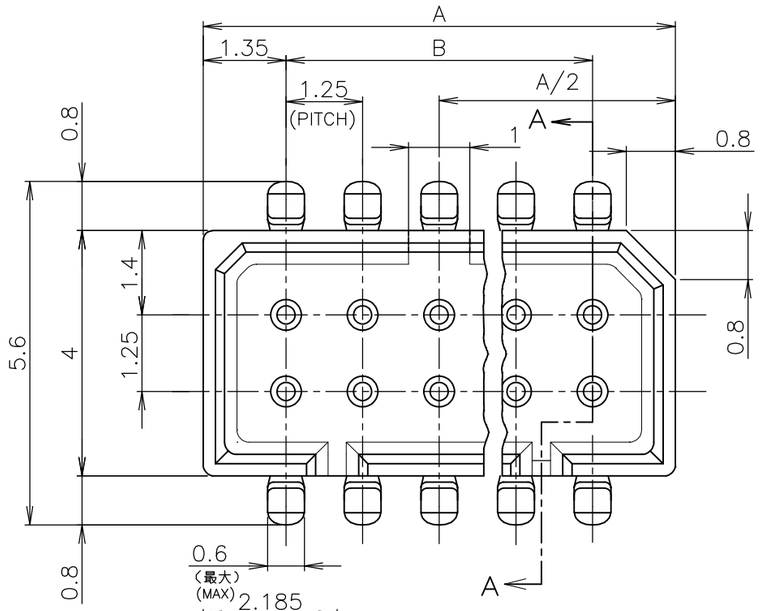

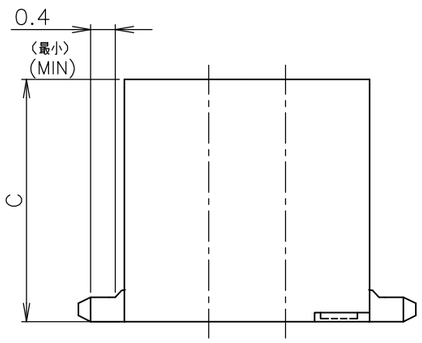

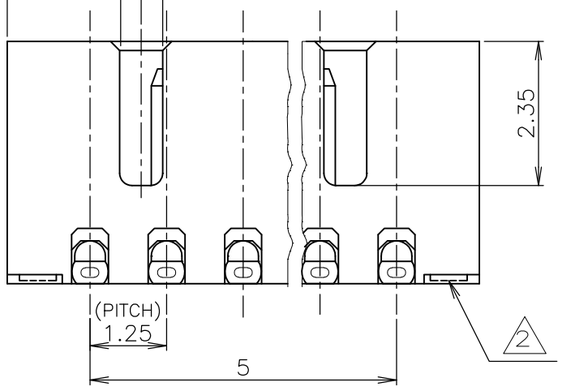

10極以上
10Pos. AND MORE

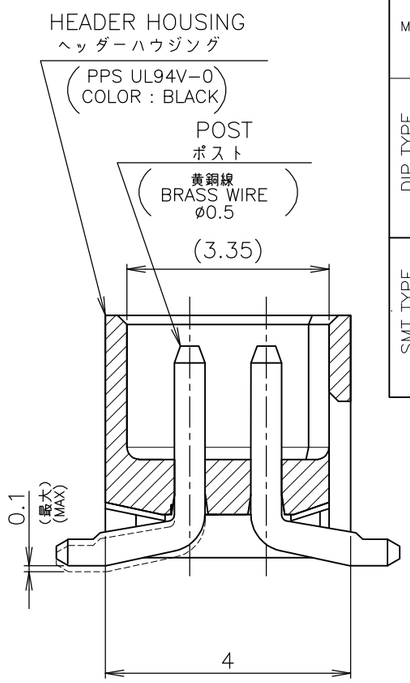

SECT A-A

嵌合時寸法:巾(mm)x高さ(mm)
DIMENSIONS AFTER MATING : WIDTH(mm) x HEIGHT(mm)

嵌合相手側 MATING COUNTER / コネクタ CONN / RECE HDR ASSY \ POST HDR ASSY		SMT TYPE X-174645-X ボス無 WITHOUT BOSS — ハウジング 高さ C寸法 HOUSING HEIGHT C DIMENSIONS 3.95	5.45	5.95
DIP TYPE	V TYPE X-174635-X X-176870-X	5.6(巾W)x 5.0(高H)	5.6(巾W)x 6.5(高H)	5.6(巾W)x 7.0(高H)
DIP TYPE	H TYPE X-174636-X X-176892-X	5.6(巾W)x 5.8(高H)	5.6(巾W)x 7.3(高H)	5.6(巾W)x 7.8(高H)
SMT TYPE	V TYPE ボス無 WITHOUT BOSS X-174904-X X-176768-X ボス付 WITH BOSS X-174639-X X-176311-X	5.6(巾W)x 5.0(高H)	5.6(巾W)x 6.5(高H)	5.6(巾W)x 7.0(高H)
SMT TYPE	H TYPE ボス無 WITHOUT BOSS X-174905-X X-176893-X ボス付 WITH BOSS X-174640-X X-176490-X	5.6(巾W)x 6.9(高H)	5.6(巾W)x 7.9(高H)	5.6(巾W)x 8.9(高H)

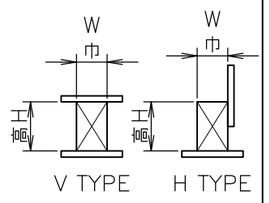

TABLE 1
表-1

SMT TYPEは、巾及び高さ寸法に
SMT TYPE INCLUDE DIMENSIONS
半田付タイン部寸法を含みます。
OF SOLDER DIP TINE.

5 OBSOLETE	4	'B'		8.75	11.45	16	~~7-~~	~~-6~~
	4		5.95	6.25	8.95	12	7-	-2
5 OBSOLETE	4			13.75	16.45	24	~~5-~~	~~-4~~
	4			12.50	15.20	22	5-	-2
5 OBSOLETE	4			11.25	13.95	20	~~5-~~	~~-0~~
	4			10.00	12.70	18	~~4-~~	~~-8~~
	4			8.75	11.45	16	~~4-~~	~~-6~~
	4	'A'		7.50	10.20	14	4-	-4
5 OBSOLETE	4			6.25	8.95	12	~~4-~~	~~-2~~
	4			5.00	7.70	10	4-	-0
5 OBSOLETE	4	'B'	3.95	2.50	5.20	6	~~3-~~	~~-6~~
	4	'A'		11.25	13.95	20	2-	-0
	4	'B'		8.75	11.45	16	1-	-6
	4	'A'	5.45	7.50	10.20	14	1-174645-4	
仕上げ FINISH	ボス形状 BOSS TYPE		C	B	A	極数 Pos.	型番 P/N	

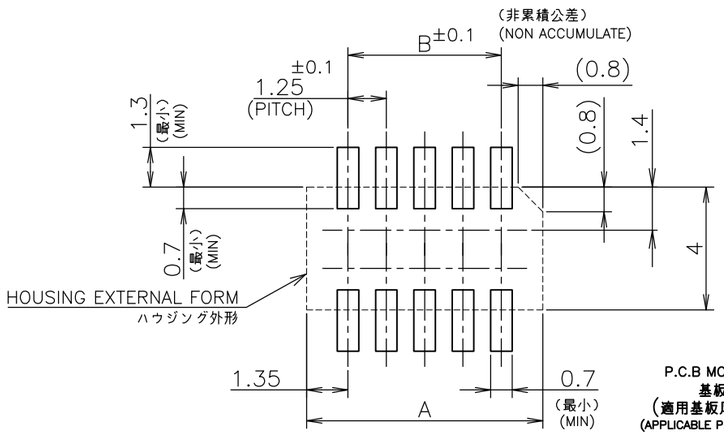

P.C.B MOUNTING LAYUOUT
基板加工寸法
(適用基板厚 :0.6mm 最小)
(APPLICABLE P.C.B THK : 0.6mm MIN)

THIS DRAWING IS A CONTROLLED DOCUMENT.

DIMENSIONS: 単位: 粍 MM

TOLERANCES UNLESS OTHERWISE SPECIFIED: 一般公差
~~0 PLC~~ ±
~~1 PLC~~ ±
~~2 PLC~~ ±
~~3 PLC~~ ±
~~4 PLC~~ ±
~~ANGLES~~ ±
10以下 : ±0.2
10を超え 30以下 : ±0.25
30を超え100以下 : ±0.3
角度 : ±3°

MATERIAL 材料 4

FINISH 仕上 3

DWN	J.TANIGAWA	03JUL89
CHK	S.KUKUCHI	03JUL87
APVD	N.ONOUE	03JUL87
PRODUCT SPEC 製品規格	108-5246	
APPLICATION SPEC 取付適用規格		
WEIGHT		

tyco Electronics
Tyco Electronics AMP K.K.
Kawasaki,Japan

NAME 名称
1.25 F-P CONNECTOR (B-TO-B)
DOUBLE ROW POST HDR ASSY SMT TYPE
WITHOUT BOSS

SIZE	CAGE CODE	DRAWING NO 番号	RESTRICTED TO
A3	00779	C-174645	—

CUSTOMER DRAWING

SCALE 尺度 10:1 | SHEET 1 OF 1 | REV K1