REV	REASON	CHAMP* PRINTED CIRCUIT BOARD MOUNTED CONNECTORS	ENGINEERING RELEASE DATE 12-14-88 APPROVAL ROGER FLAHERTY

1. INTRODUCTION

This specification covers the requirements for application of AMP* CHAMP printed circuit (PC) board mounted connectors. The connectors are available in shielded and unshielded versions and are designed for right-angle-, vertical-, and edge-mount applications.

The following are product features and terms that will be used throughout this specification. The illustrations represent the available mounting options and show unshielded connectors for simplicity (plug and receptacle, shielded and unshielded are essentially the same).

NOTE *All dimensions in this specification are given in inches and have a decimal tolerance of ±.005 and an angle tolerance of ±2° unless otherwise specified. Metric equivalents (mm) can be obtained by multiplying the given dimension by 25.4.*

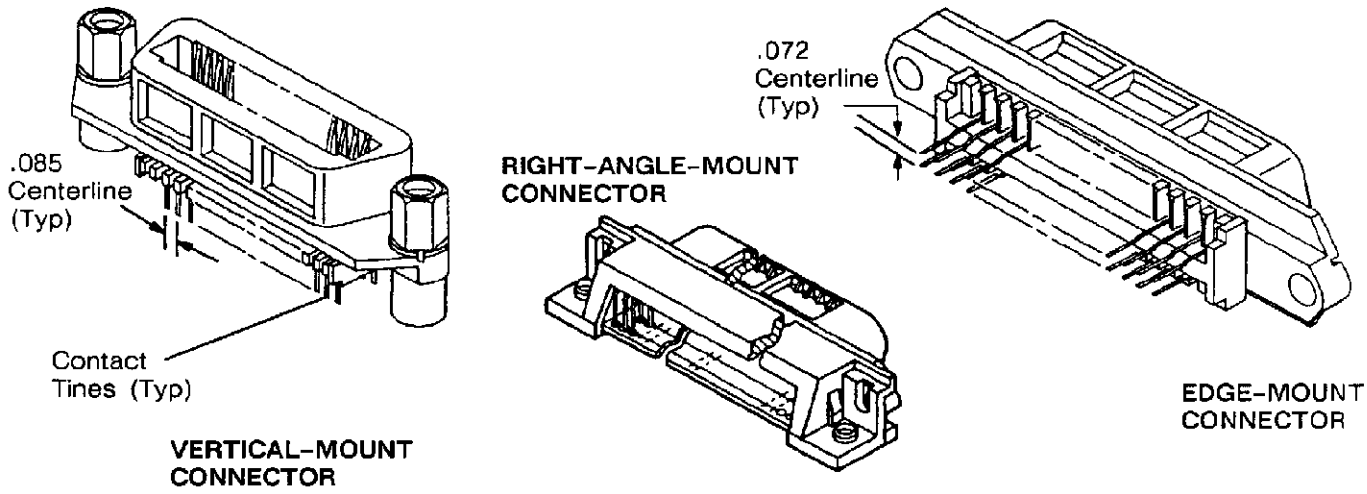

Fig. 1. Product Features

2. REFERENCE MATERIAL

2.1. Product Specification

AMP Product Specification 108-6078 provides applicable performance requirements.

2.2. Guideline Documentation

AMP Corporate Bulletin No. 52 outlines recommended soldering techinques.

2.3. Instructional Material

AMP Instruction Sheet IS 7672 provides right-angle- and vertical-mount connector installation procedures. IS 3201 provides edge-mount connector installation procedures. IS 3160 provides attachment hardware information. IS 7564 provides mating cable connector information.

*Trademark of AMP Incorporated

2.4. Customer Drawings

Customer Drawings for specific products are available from the responsible AMP Engineering department. The information on Customer Drawings takes priority if there is a conflict with this specification or with any other technical documentation supplied by AMP Incorporated.

3.5. Product Number and Product Code

Product Part Number 552725 and Product Code 1252 are assigned to the AMP CHAMP PC board connector product line. Use of these numbers will identify the product line and expedite your inquiries through an AMP service network established to help you obtain product and tooling information. Such information can be obtained through a local AMP Representative (Field Sales Engineer, Field Application Engineer, etc.) or, after purchase, by calling the CUSTOMER HOTLINE at the top of Page 1.

3. REQUIREMENTS

3.1. Printed Circuit Board

A. Material

The board should be composed of glass/epoxy material, use of less dimensionally stable material may present problems when inserting the components.

B. Thickness

The connectors may be installed on .062- to .125-in.-thick PC Boards for vertical- and right-angle-mount connectors and on .062-in.-thick PC Boards for edge-mount connectors. Board thickness may vary depending upon application, however, terminal length becomes important for wave solder operations. A recommended minimum of .040 terminal should protrude through the PC Board. PC Boards are divided into three categories, Class A, Class B, and Class C, depending on hole location tolerances (see Figure 2).

HOLE LOCATION TOLERANCES			
RELATED BOARD SIZE	CLASS A	CLASS B	CLASS C
Greatest dimension is less than 12.00 inches.	±.006	±.004	±.002
Greatest dimension is greater than 12.00 inches.	±.008	±.006	±.004

Fig. 2. PC Board Requirements

C. Board Layout

Board layout shall be as shown in Figure 3.

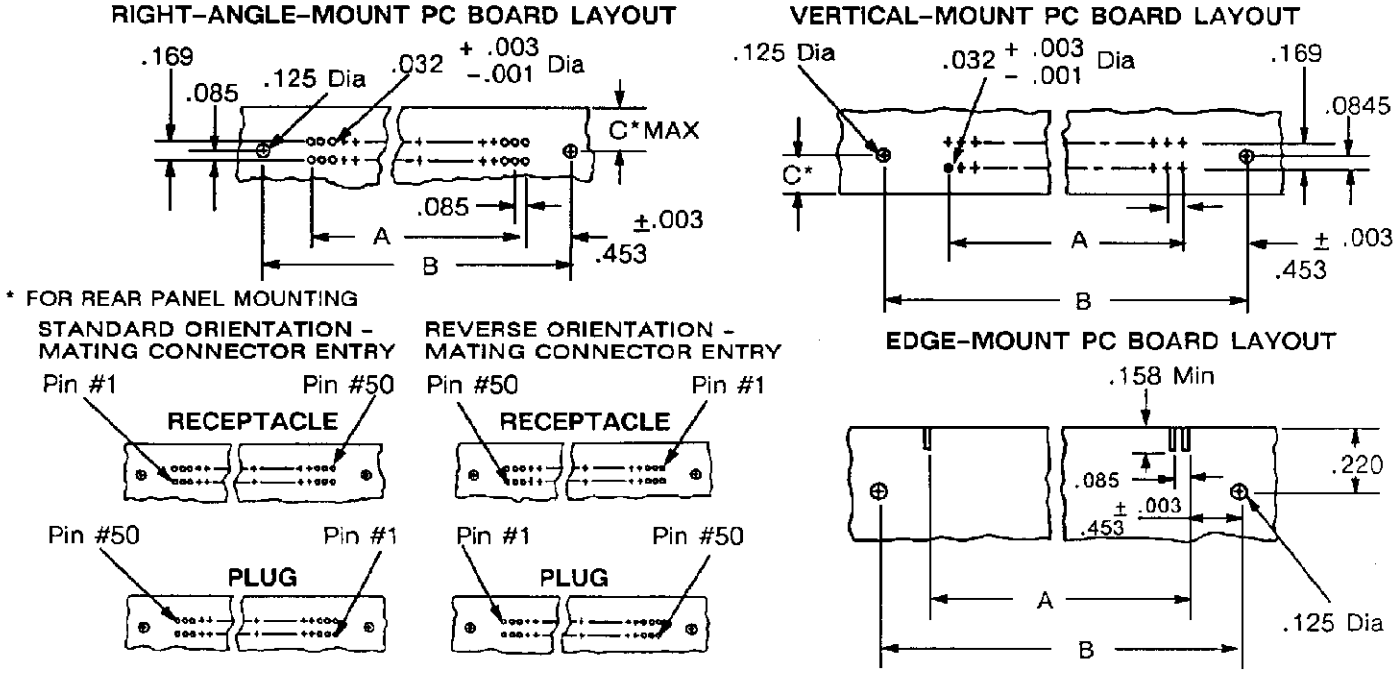

A = .085 x (Total Number of Contacts In One Row, Minus One).
B = .906 + A
C = .447 for unshielded connectors,
.450 for shielded flush-mount connectors, or
.490 for shielded, standard boss connector

Fig. 3. PC Board Layout

3.2. Mating Dimensions

The dimension in Figure 4 is required to assure full mating of connectors. This dimension must be considered when determining the method of mounting and the thickness of a panel when the connector is to be panel mounted.

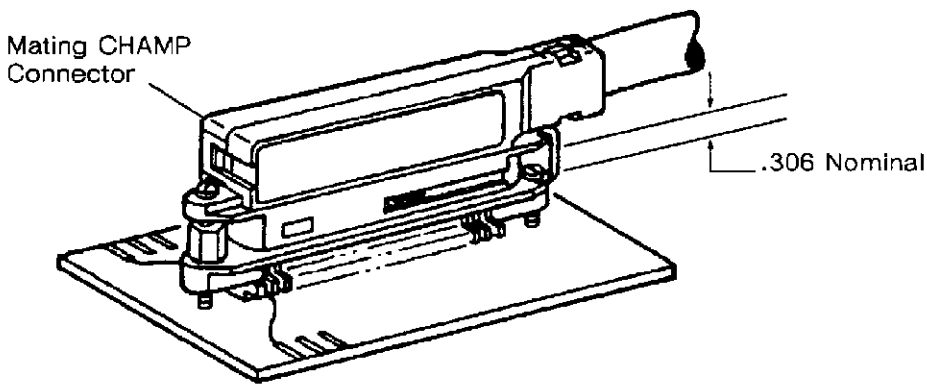

Fig. 4. Mating Dimensions

3.3. Panel Mounting (Figure 5)

The following layout provides the dimensions required for rear panel mounting the shielded and unshielded connectors.

SCREW LOCK

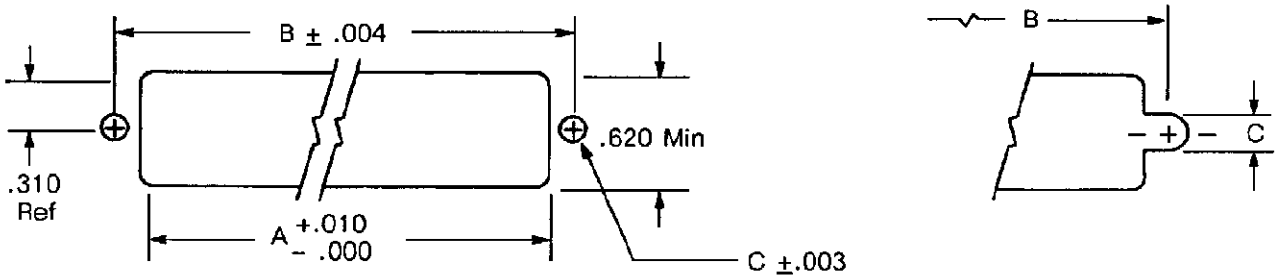

STANDARD

IEEE-488 LAYOUT

NUMBER OF POSITIONS		DIMENSIONS			
				C	
SHIELDED	UNSHIELDED	A	B	SHIELDED	UNSHIELDED
—	14	1.152	1.416	—	.126
24	24	1.575	1.842	•	.126
36	36	2.085	2.352	.149	.126
50	50	2.700	2.946	.149	.126
—	64	3.275	3.542	—	.126

PANEL THICKNESS RANGE: .062 FOR REAR PANEL MOUNT APPLICATIONS. FOR 24 POSITION IEEE-488 METRIC VERSION .062-.093 MAY BE USED.

• .152 FOR STANDARD HARDWARE; .192 FOR METRIC HARDWARE.

BAIL LOCK

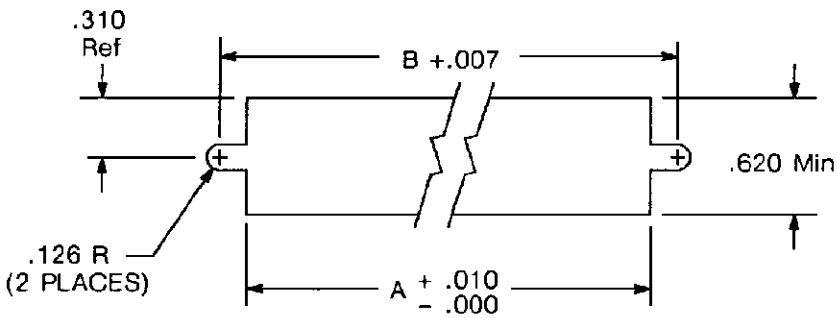

NUMBER OF POSITIONS		DIMENSIONS	
SHIELDED	UNSHIELDED	A	B
—	14	1.380	1.416
24	24	1.806	1.842
36	36	2.316	2.352
50	50	2.910	2.946
—	64	3.506	3.542

Fig. 5 Panel Mounting

3.4. Polarizing

By its very design, the connector is polarized. The keystone configuration of the mating face prohibits the accidental inversion of a mating connector.

3.5. Methods of Attaching Connector to PC Board

The connector should be secured to the PC Board prior to soldering. This can be done by using any of the following methods:

A. Commercially Available Hardware

Most connectors are to be attached to the PC Board with commercially available screws, washers, and nuts, rivets, or similar devices. The hardware should be attached prior to soldering and soldered in place when the solder posts are soldered.

B. Boardlocks

Some connectors include boardlock features that contain two gripping shoulders which lock into position as the solder posts are inserted into the PC Board.

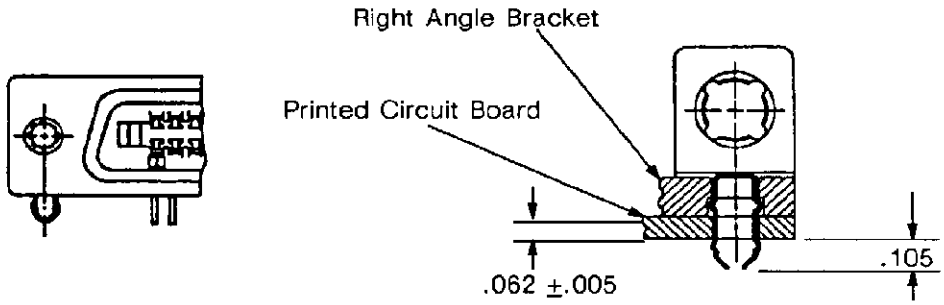

Fig. 6. Boardlock Mounting

3.6. Fastening Hardware

Hardware such as screwlock kits, bail lock kits, and CHAMP-LOK* kits are available to secure mated unshielded connectors. Shielded connectors are available in kit form and will accept standard fastening hardware or the connectors are available in preassembled form with fastening hardware also preassembled.

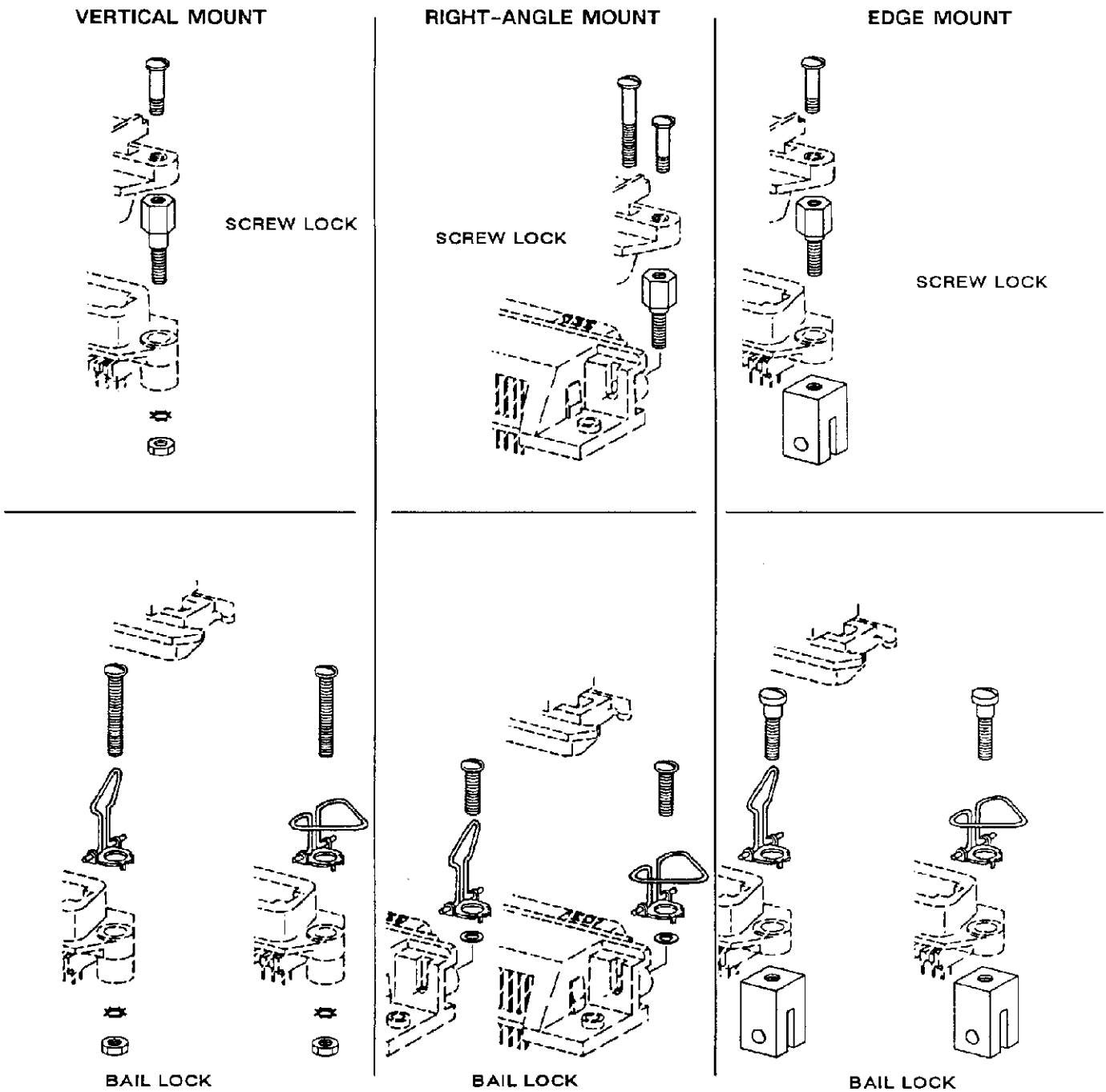

Fig. 7. Fastening Hardware

3.7. Ancillary Items

Dust covers are available to protect the mating face of connectors that are NOT mated.

3.8. Soldering

A. Flux Selection

The connector solder tails and attaching hardware (if applicable) must be fluxed prior to soldering with a medium active rosin base flux or a medium to highly active organic flux. Selection of the proper flux will depend on the type of PC Board and other components, if any, mounted on the board. Additionally, the choice of flux will have to be compatible with the flow solder line, manufacturing, and safety requirements.

B. Cleaning

Removal of fluxes, residues, and activators is mandatory. Cleaning procedures are dependent upon the type of flux used on the solder line.

C. Drying

When drying cleaned assemblies and PC Boards make certain that temperature limitations of -55° to 105° C are not exceeded. Excessive temperatures may cause housing degradation.

D. Soldering Guidelines

AMP Corporate Bulletin 52 is available upon request and can be used as a guide in soldering. This bulletin provides information on various flux types and characteristics along with the commercial designation and flux removal procedures. A checklist is attached to the bulletin which is intended to serve as a guide for obtaining information on soldering problems.

3.9. Special Filter Connector

This receptacle connector filters out unwanted frequencies by capacitive parallel circuits to ground.

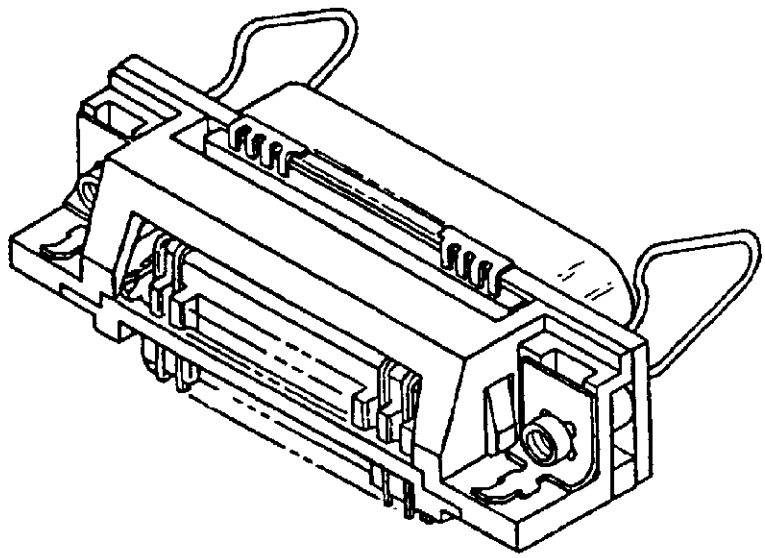

Fig. 8. Filter Connector

4. VISUAL AID

Figure 9 depicts typical CHAMP edge-mount connector after it has been installed and soldered onto a pc board. The illustration shows visual conditions which assure a proper installation.

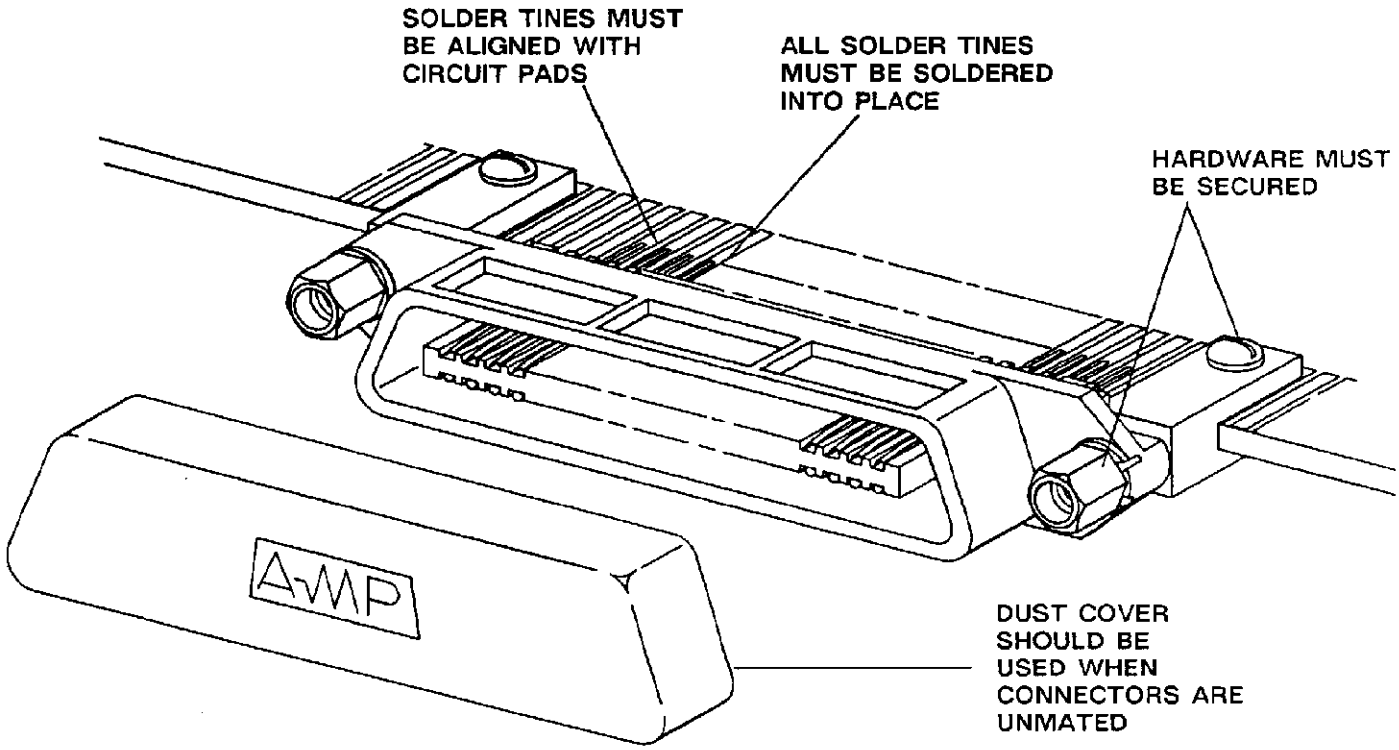

Fig. 9. VISUAL AID