AMP INCORPORATED
Harrisburg, Pa. 17105

AMP* ECONOMATE* ZIF T-BAR INSERTION TOOLS 266267

Instruction Sheet
IS 2999
RELEASED 7-22-82

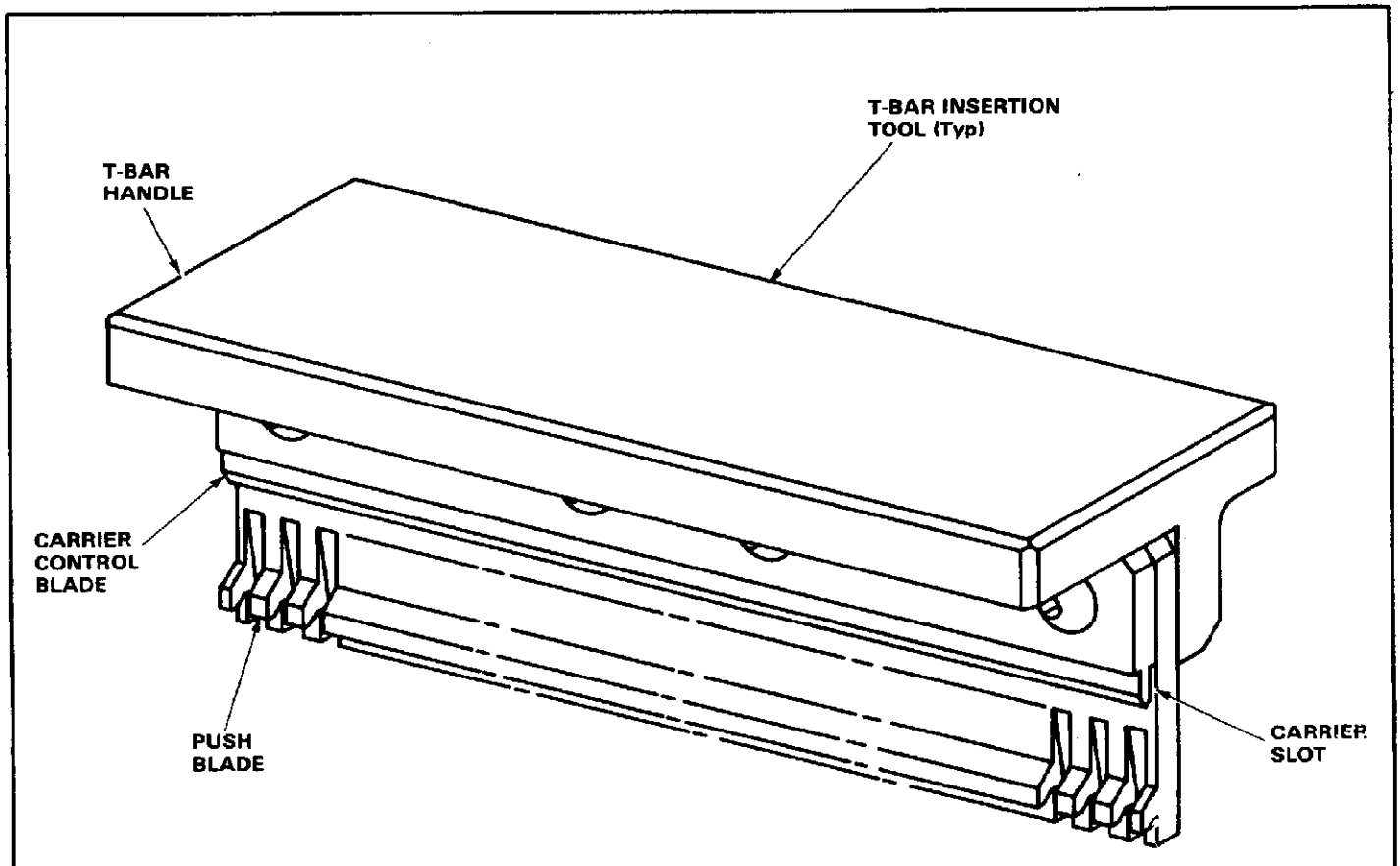

TOOL NUMBER	NUMBER OF POSITIONS	CONTACTS (Reel Number)
266267-1	20	119196*
-2	30	
-3	40	
-4	50	
-5	60	

* THIS NUMBER REPRESENTS A FULL REEL OF STRIP CONTACTS THAT CAN BE CUT TO LENGTH AS REQUIRED. SPECIFIC LENGTHS ARE AVAILABLE PRE-CUT PER REQUEST THROUGH AMP ENGINEERING.

Fig. 1

1. INTRODUCTION

This instruction sheet (IS) covers the use of AMP ECONOMATE Zero Insertion Force (ZIF) T-Bar Insertion Tools with the base part number of 266267. See Figure 1.

Read this material thoroughly before starting.

2. DESCRIPTION (Figure 1)

The T-bar tools are designed to insert strip-form contacts with .025-in.-square posts on .100-in.-centerline spacing into pc boards. Various tools (differing in length) are available to accommodate contact strips of varying lengths.

Each tool consists of a carrier control blade, a push blade, and a T-bar handle. These components are supplied assembled and held together with rivets.

3. INSTALLING CONTACTS (Figures 2, 3, and 4)

NOTE *These tools are designed to be used in an arbor frame assembly capable of 50 pounds of insertion force for each contact.*

1. Determine the number of contacts to be installed, then select the length of contact strip and applicable tooling. See Figure 1.

2. Obtain an insertion fixture capable of receiving the full length of the contact post without deforming the post. See Figure 2.

*Trademark of AMP Incorporated

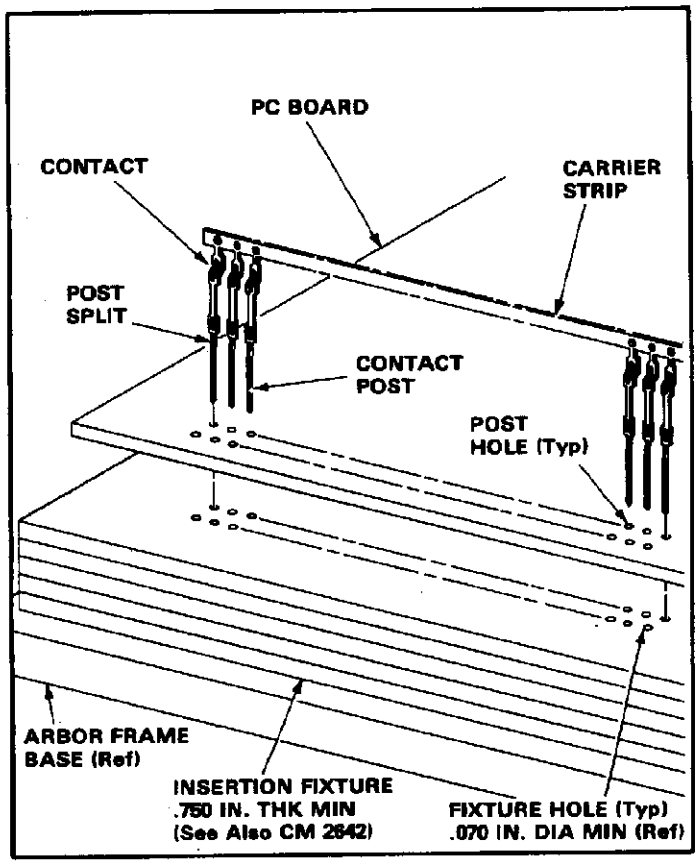

Fig. 2

3. Place the fixture on the base of the arbor frame. Position the pc board on the fixture with pc board post holes aligned with fixture holes.

4. With the printed circuit pad surface of the contact turned outward, hold the tool at a slight angle to the strip of contacts and insert the carrier into the carrier slot. Make sure the contacts are aligned with the contact slots in the push blade, then rotate the tool until the contacts are seated in the contact slots. See Figure 3.

5. Insert the contact posts into the pc board until the post splits start into the holes.

NOTE *An alternate method of starting the contact posts would be to insert them into the board first, then position the tool on the carrier strip. (This is a reversal of Steps 4 and 5.)*

6. Position components on the arbor frame base so that the T-bar handle is centered under the arbor ram.

7. Keep the tool straight and lower the arbor ram until it touches the T-bar handle.

8. Check to be sure all components are aligned, then lower the arbor ram until the push blade tips touch the pc board.

9. Raise the arbor ram, remove the T-bar tool, and check to be sure all contacts are seated to the same depth.

This completes installation of the contacts into the pc board.

NOTE *For information concerning carrier strip removed and connector housing assembly, refer to Customer Manual CM 2642.*

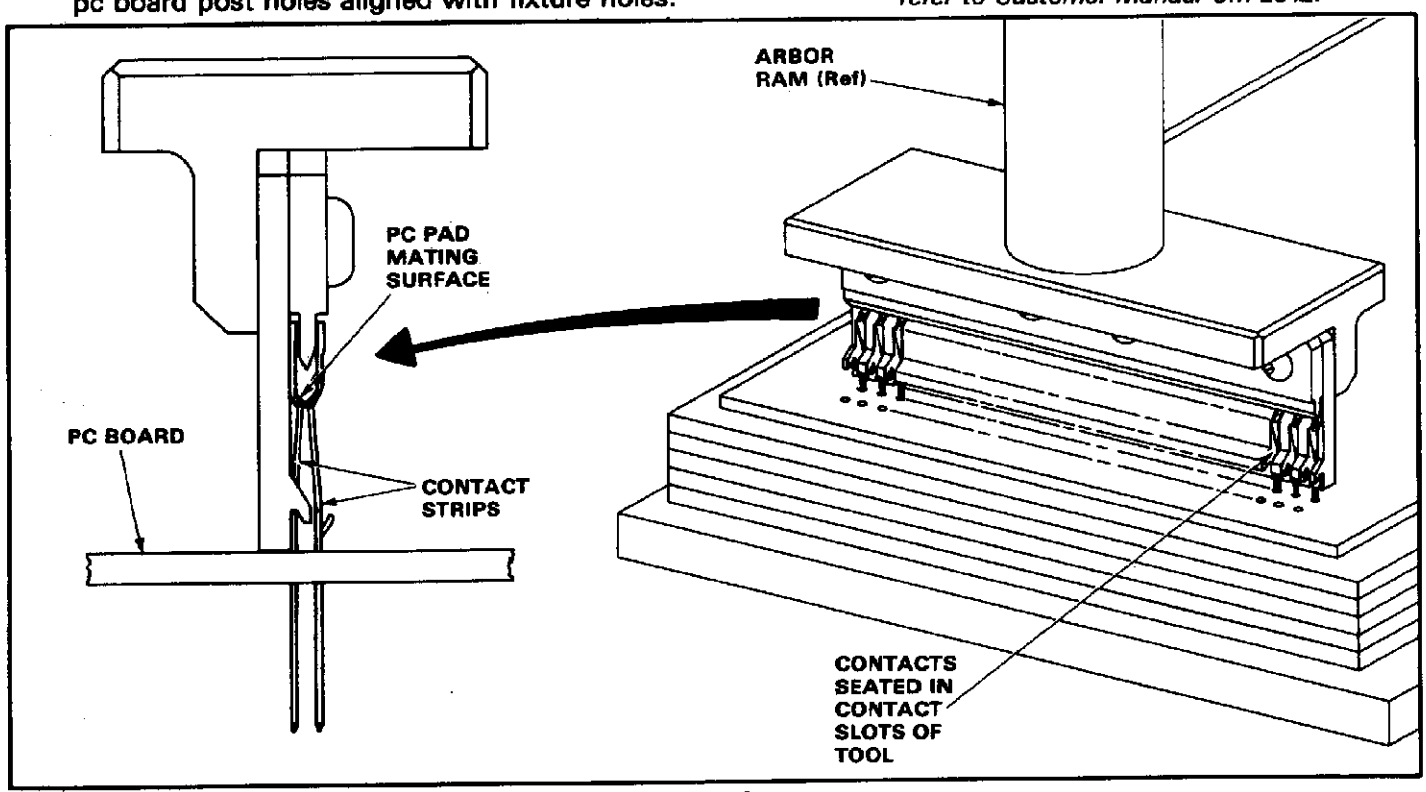

Fig. 3

4. TOOL CERTIFICATION

This tooling should be certified with the information provided in Figure 4. We recommend that each tool be inspected immediately upon arrival at your facility and at regularly scheduled intervals, to assure it has not been damaged during handling.

Parts must be replaced by qualified AMP personnel to assure certification of the tool. When repair is necessary, contact your local AMP Field Engineer, or return the tooling with a written description of the problem to:

AMP Incorporated
Customer Repair
1523 North 4th Street
Harrisburg, Pennsylvania 17102

or a wholly owned subsidiary of AMP Incorporated.

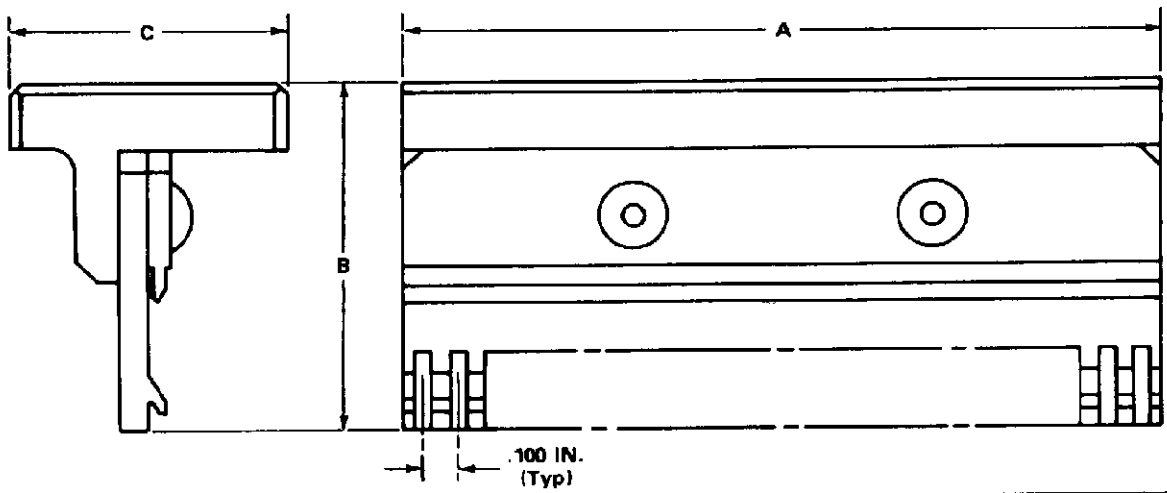

SPECIFICATIONS					CUSTOMER REPLACEABLE PARTS
TOOL NO.	DIM. (In.)			WEIGHT (Oz.) (Approx)	
	A	B	C		
266267-1	2.00	1.18	1.56	10	See Paragraph 4
-2	3.00			15	
-3	4.00			20	
-4	5.00			25	
-5	6.00			30	
ENGINEERING APPROVAL				DATE	
John L. Stepp				7/22/82	

Fig. 4