DO NOT SCALE	METRIC	3rd ANGLE PROJECTION
DIMENSIONS IN mm		

ITEM No	PART NUMBER	DESCRIPTION	QTY PER UNIT	NOTES

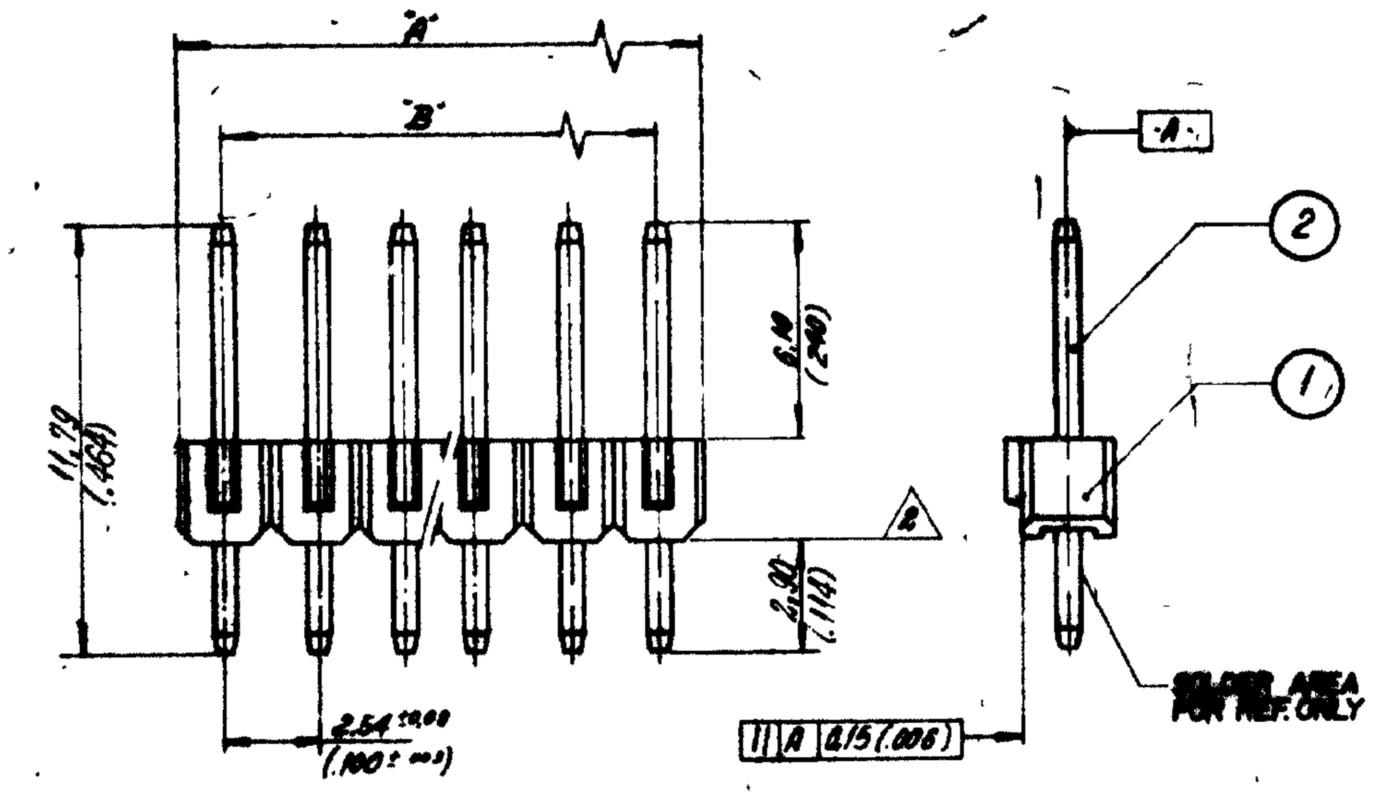

TYPE 1

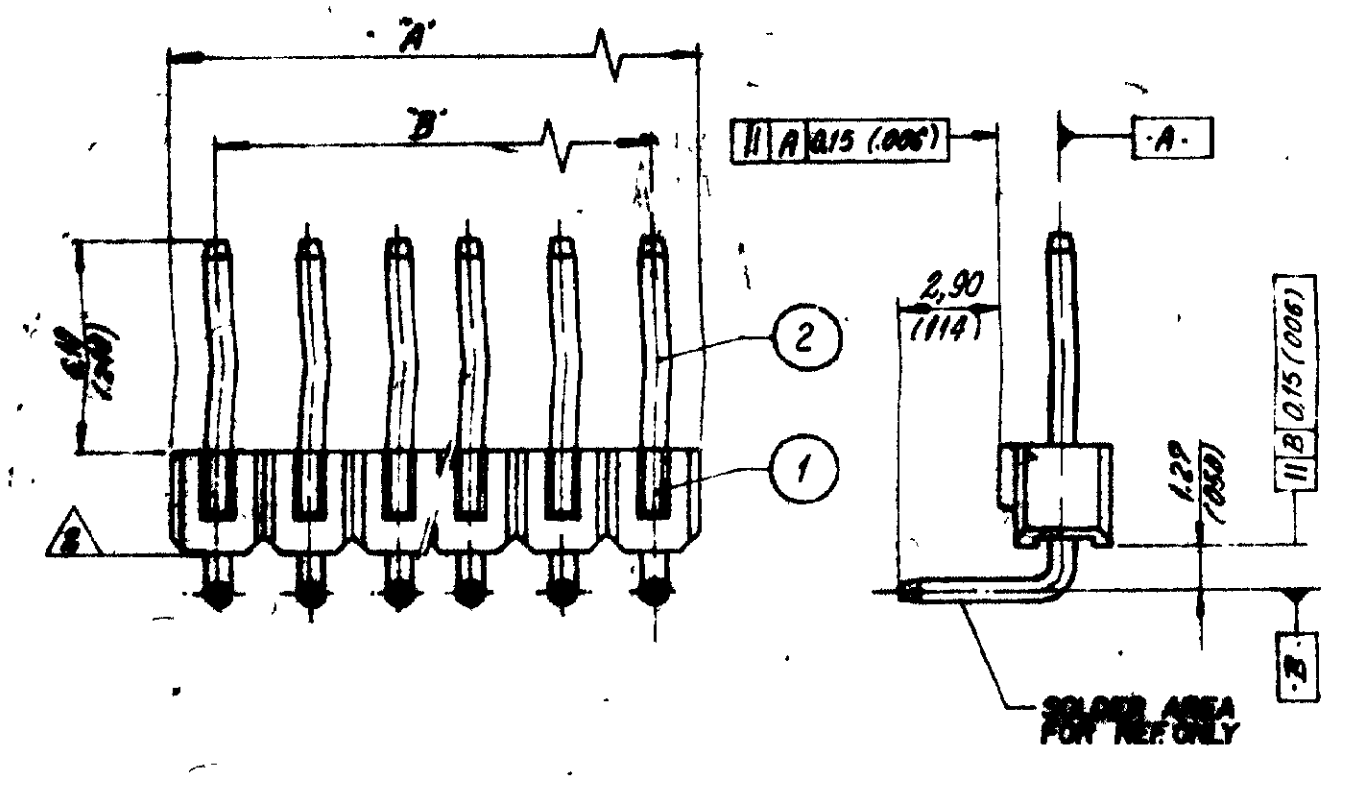

TYPE 2

COMPONENTS								
HEADER MODU ①			880170-1	880170-1	880170-1	880170-1	880170-1	880170-1
BANDOLEER CONTACT ② PIN			3-881343-2	3-881343-3	3-881343-4	4-881343-2	4-881343-3	4-881343-4
			TYPE 1	TYPE 1	TYPE 1	TYPE 2	TYPE 2	TYPE 2
No	A ±0,20 (.008)	B ±0,10 (.004)	PART NUMBER ASSY	PART NUMBER ASSY	PART NUMBER ASSY	PART NUMBER ASSY	PART NUMBER ASSY	PART NUMBER ASSY
1	2,54 (.100)	—	880154-1	880155-1	880156-1	880157-1	880158-1	880159-1
2	5,08 (.200)	2,54 (.100)	880154-2	880155-2	880156-2	880157-2	△4 ~~880158-2~~	880159-2
3	7,62 (.300)	5,08 (.200)	△3 ~~-3~~	△4 ~~-3~~	△4 ~~-3~~	-3	△4 ~~-3~~	△4 ~~-3~~
4	10,16 (.400)	7,62 (.300)	△3 ~~-4~~	△4 ~~-4~~	△4 ~~-4~~	-4	△4 ~~-4~~	-4
5	12,70 (.500)	10,16 (.400)	△3 ~~-5~~	△4 ~~-5~~	△4 ~~-5~~	-5	△4 ~~-5~~	-5
6	15,24 (.600)	12,70 (.500)	△3 ~~-6~~	△4 ~~-6~~	△4 ~~-6~~	-6	△4 ~~-6~~	-6
7	17,78 (.700)	15,24 (.600)	△3 ~~-7~~	△4 ~~-7~~	△4 ~~-7~~	-7	△4 ~~-7~~	△4 ~~-7~~
8	20,32 (.800)	17,78 (.700)	-8	-8	-8	-8	△4 ~~-8~~	-8
9	22,86 (.900)	20,32 (.800)	△4 ~~-9~~	△4 ~~-9~~	△4 ~~-9~~	-9	△4 ~~-9~~	△4 ~~-9~~
10	25,40 (1.000)	22,86 (.900)	1 0	1 -0	1 -0	1 -0	1 -0	1 0
11	27,94 (1.100)	25,40 (1.000)	1 1	1 -1	1 -1	1 -1	1 -1	1 -1
12	30,48 (1.200)	27,94 (1.100)	1 2	1 -2	1 -2	1 -2	1 -2	1 -2
13	33,02 (1.300)	30,48 (1.200)	1 -3	1 -3	1 -3	1 -3	1 -3	1 -3
14	35,56 (1.400)	33,02 (1.300)	1 4	~~1 -4~~ △4	1 -4	1 -4	1 -4	1 -4
15	38,10 (1.500)	35,56 (1.400)	1 -5	1 -5	1 -5	1 -5	1 -5	1 -5
16	40,64 (1.600)	38,10 (1.500)	1 -6	1 -6	1 -6	1 -6	1 -6	1 -6
17	43,18 (1.700)	40,64 (1.600)	1 -7	1 -7	1 7	1 -7	1 -7	1 -7
18	45,72 (1.800)	43,18 (1.700)	1 -8	1 -8	1 -8	1 -8	1 -8	1 -8
19	48,26 (1.900)	45,72 (1.800)	1 9	1 -9	1 -9	1 -9	1 -9	1 -9
20	50,80 (2.000)	48,26 (1.900)	2 -0	2 -0	2 -0	2 -0	2 -0	2 -0
21	53,34 (2.100)	50,80 (2.000)	2 -1	2 -1	2 -1	2 -1	2 -1	2 -1
22	55,88 (2.200)	53,34 (2.100)	2 -2	2 -2	2 -2	2 -2	2 -2	2 -2
23	58,42 (2.300)	55,88 (2.200)	2 -3	2 -3	2 -3	2 -3	2 -3	2 -3
24	60,96 (2.400)	58,42 (2.300)	2 -4	2 -4	2 -4	2 -4	2 -4	2 -4
25	63,50 (2.500)	60,96 (2.400)	2 5	2 -5	2 -5	2 -5	2 -5	2 -5
26	66,04 (2.600)	63,50 (2.500)	2 -6	2 -6	2 -6	2 -6	2 -6	2 -6
27	68,58 (2.700)	66,04 (2.600)	2 -7	2 -7	2 -7	2 -7	2 -7	2 -7
28	71,12 (2.800)	68,58 (2.700)	2 -8	2 -8	2 -8	2 -8	2 -8	2 -8
29	73,66 (2.900)	71,12 (2.800)	2 -9	2 -9	2 -9	2 -9	2 -9	2 -9
30	76,20 (3.000)	73,66 (2.900)	3 -0	3 -0	3 -0	3 -0	3 -0	3 -0
31	78,74 (3.100)	76,20 (3.000)	3 -1	3 -1	3 -1	3 -1	3 -1	3 -1
32	81,28 (3.200)	78,74 (3.100)	3 -2	3 -2	3 -2	3 -2	3 -2	3 -2
33	83,82 (3.300)	81,28 (3.200)	3 -3	3 -3	3 -3	3 -3	3 -3	3 -3
34	86,36 (3.400)	83,82 (3.300)	3 -4	3 -4	3 -4	3 -4	3 -4	3 -4
35	88,90 (3.500)	86,36 (3.400)	3 -5	3 -5	3 -5	3 -5	3 -5	3 -5
36	91,44 (3.600)	88,90 (3.500)	3 6	3 -6	3 -6	3 -6	3 -6	3 -6
37	93,98 (3.700)	91,44 (3.600)	3 -7	3 -7	3 -7	3 -7	3 -7	3 -7
38	96,52 (3.800)	93,98 (3.700)	3 -8	3 -8	3 -8	3 -8	3 -8	3 -8
39	99,06 (3.900)	96,52 (3.800)	3 -9	3 -9	3 -9	3 -9	3 -9	3 -9
40	101,60 (4.000)	99,06 (3.900)	4 -0	4 -0	4 -0	4 -0	4 -0	4 0
41	104,14 (4.100)	101,60 (4.000)	4 -1	4 -1	4 -1	4 -1	4 -1	4 -1
42	106,68 (4.200)	104,14 (4.100)	4 -2	4 -2	4 2	4 -2	4 -2	4 -2
43	109,22 (4.300)	106,68 (4.200)	4 -3	4 -3	4 -3	4 -3	4 3	4 -3
44	111,76 (4.400)	109,22 (4.300)	4 -4	4 -4	4 -4	4 -4	4 -4	4 -4
45	114,30 (4.500)	111,76 (4.400)	4 5	4 -5	4 -5	4 -5	4 -5	4 -5
46	116,84 (4.600)	114,30 (4.500)	4 6	4 -6	4 6	4 -6	4 -6	4 6
47	119,38 (4.700)	116,84 (4.600)	4 -7	4 -7	4 7	4 -7	4 -7	4 -7
48	121,92 (4.800)	119,38 (4.700)	4 -8	4 -8	4 -8	4 -8	4 8	4 -8
49	124,46 (4.900)	121,92 (4.800)	4 -9	4 -9	4 9	4 -9	4 -9	4 -9
50	127,00 (5.000)	124,46 (4.900)	5-880154-0	5-880155-0	5-880156 0	5-880157-0	5-880158-0	5-880159-0

MADE FROM 5-880154-0
MADE FROM 5-880155-0
MADE FROM 5-880156-0
MADE FROM 5-880157-0
MADE FROM 5-880158-0
MADE FROM 5-880159-0

NOTE:
1- POST RETENTION FORCE MUST NOT BE LESS THAN 1,5 Kg.
△A HEADER BOW MUST BE ACCORDING TO AMP SPECIFICATION 108-85044
△3 OBSOLETE PARTS: OBSOLETE CIS STREAMLINING PER D.RENAUD/D.SINISI
△4 OBSOLETE PARTS

USED ON

OTHER TREATMENT	FINISH	MATERIAL	PART NUMBER

UNLESS OTHERWISE SPECIFIED: REMOVE BURRS, BREAK SHARP EDGES 0,40 RAD MAX
1 DEC PLACE ± 0,3
2 DEC PLACE ± 0,13 ANGLE ± 2° 0'-30
TOTAL SURFACE AREA
SCALE 5:1

LTR	REVISION RECORD	ECN	DR / CHK	DATE
F1	REVISED PER ECO-09-026444		KK / HMR	28JAN10
F	Revised by ECN	[illegible]	[illegible]	14JAN03
E	REVISED BY ECN	[illegible]	[illegible]	[illegible]
D	REVISED BY ECN	[illegible]	[illegible]	[illegible]
C	REVISED BY ECN	1049	[illegible]	13-MAR-[illegible]
B	REVISED BY ECN	1132	[illegible]	25 JUL [illegible]
A	REVISED BY ECN	823	[illegible]	5/10/83
0	[illegible]		[illegible]	23-4-83

DIE / MOULD / STRIP NO
FIRST USED
DR [illegible] JULY/2[illegible]
CHK TLAA 25-8-83
APP [illegible]

AMP do BRASIL LTDA
São Paulo, Brasil

DESCRIPTION AMP MODU II PIN HEADER SINGLE ROW (ROUND POST)

LOC AP | A2 | DWG NO 880154 TO 880159 | SHEET 1 of 1

DWG No 880154 TO 880159