THIS DRAWING IS UNPUBLISHED. RELEASED FOR PUBLICATION -,- .
© COPYRIGHT - BY TYCO ELECTRONICS CORPORATION. ALL RIGHTS RESERVED.

LOC	DIST
DF	ZO

REVISIONS

P	LTR	DESCRIPTION	DATE	DWN	APVD
	L	REV PER ECO 07-012840	6-21-07	CT	NT

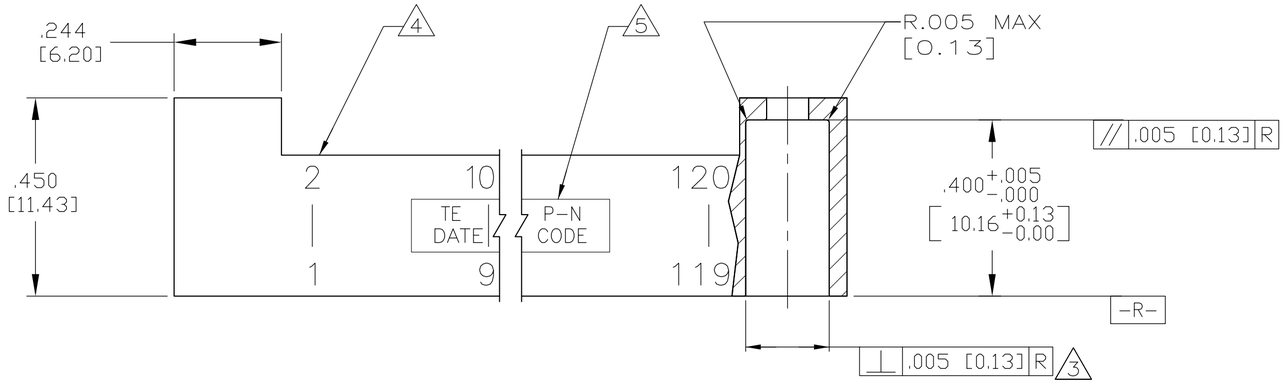

1. THESE DIMENSIONS APPLY TO CAVITY CENTERLINES ONLY, NOT TO CONTACT LOCATIONS.
2. TOLERANCE NON-CUMULATIVE.
3. MEASURED AT BOTTOM OF HOLE WITH 5 MAX DRAFT ANGLE.
4. CAVITY IDENT. MARKED FIRST, LAST AND EVERY FIFTH CAVITY OF EACH ROW, AS SHOWN, WITH .062±.015 [1.57±0.38] HIGH CHARACTERS.
5. TE LOGO, TE PART NO. AND DATE CODE MARKED .062±.015 [1.57±0.38] HIGH CHARACTERS IN APPROXIMATE AREA SHOWN.
6. HOUSING MATERIAL: POLYPHENYLENE SULFIDE, 40% GLASS. CONTACTS: PHOSPHORUS BRONZE
7. MARK "CSA" LOGO ON PART.
8. GROUP A & B SAMPLE TESTING PER MIL-C-55302.
9. CONTACTS FINISH: GOLD FLASH OVER .000050 [0.00127] NICKEL ENTIRE RECEPTACLE, .000050 [0.00127] GOLD IN CONTACT AREA ONLY.

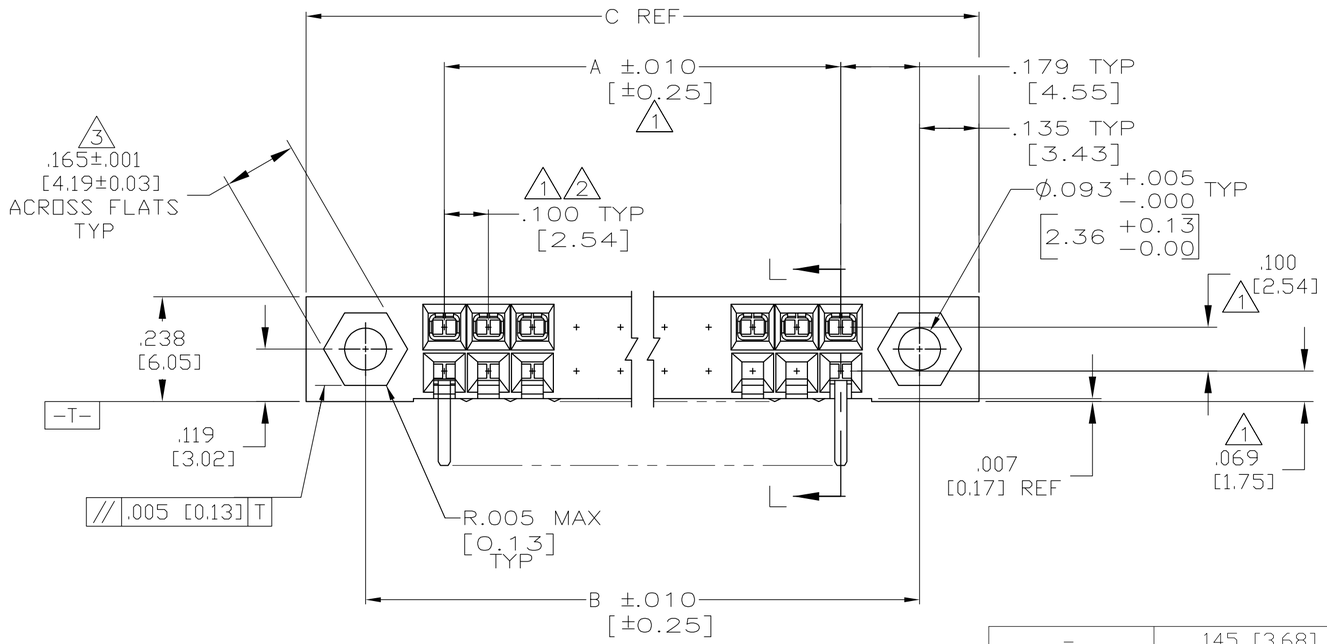

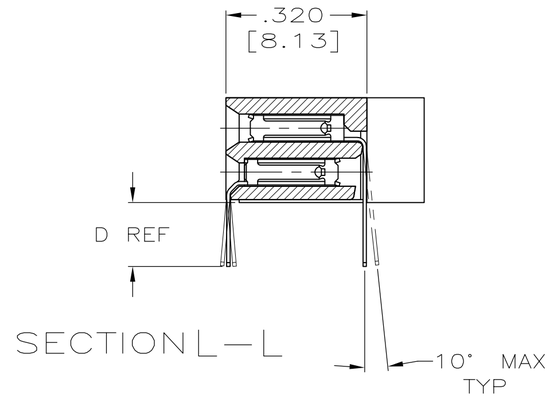

SECTION L-L

REMARKS	DIM D	DIM C	DIM B	DIM A	NO OF POSN	PART NUMBER
-	.145 [3.68]	7.528 [191.21]	7.258 [184.35]	6.900 [175.26]	140	102953-7
-	.115 [2.92]	3.528 [89.61]	3.258 [82.75]	2.900 [73.66]	60	102953-6
-	.115 [2.92]	9.028 [229.31]	8.758 [222.45]	8.400 [213.36]	170	102953-5
-	.115 [2.92]	7.528 [191.21]	7.258 [184.35]	6.900 [175.26]	140	102953-4
OBSOLETE	-	-	-	-	-	102953-3
-	.115 [2.92]	5.628 [142.95]	5.358 [136.09]	5.000 [127.00]	102	102953-2
-	.115 [2.92]	6.528 [165.81]	6.258 [158.95]	5.900 [149.86]	120	102953-1

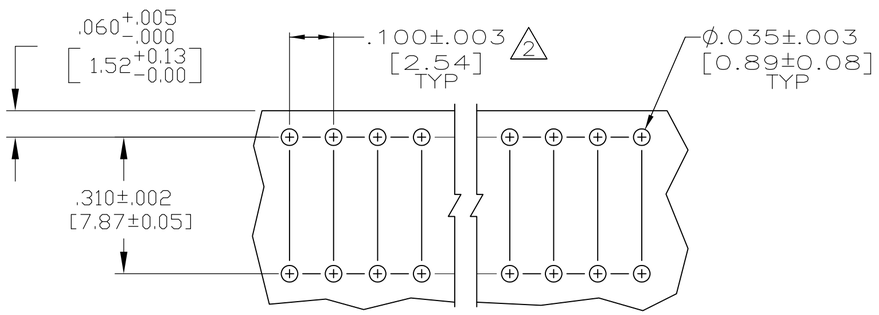

RECOMMENDED HOLE LAYOUT

THIS DRAWING IS A CONTROLLED DOCUMENT.

DIMENSIONS: INCHES

TOLERANCES UNLESS OTHERWISE SPECIFIED:
0 PLC ± -
1 PLC ± -
2 PLC ± -
3 PLC ± .005 [0.13]
4 PLC ± -
ANGLES ± -

MATERIAL 6

FINISH 9

DWN	C.C.THOMAS	10-15-97
CHK	G. ALTEMOSE	10-15-97
APVD	G. ALTEMOSE	10-15-97
PRODUCT SPEC	—	
APPLICATION SPEC	—	
WEIGHT	—	

Tyco Electronics

Tyco Electronics Corporation
Harrisburg, PA 17105-3608

NAME: ASSEMBLY, RECEPTACLE, MOD II, .100 X .100

SIZE	CAGE CODE	DRAWING NO	RESTRICTED TO
A2	00779	C-102953	—

CUSTOMER DRAWING | SCALE 4:1 | SHEET 1 OF 1 | REV L

102953

AMP 1471-9 REV 31MAR2000

21JUN2007 11:08am us016412 H:\docmod\102953_1_c.dwg