THIS DRAWING IS UNPUBLISHED. RELEASED FOR PUBLICATION -,- .
© COPYRIGHT - BY TYCO ELECTRONICS CORPORATION. ALL INTERNATIONAL RIGHTS RESERVED.

LOC	DIST
H	—

REVISIONS

P	LTR	DESCRIPTION	DATE	DWN	APVD
	B	ECR-07-013012	01-06-07	DC	TDB
	C	ECR-07-030325	17-12-07	DC	TDB
	C1	ECR-09-010637	13-08-09	AEG	KMA

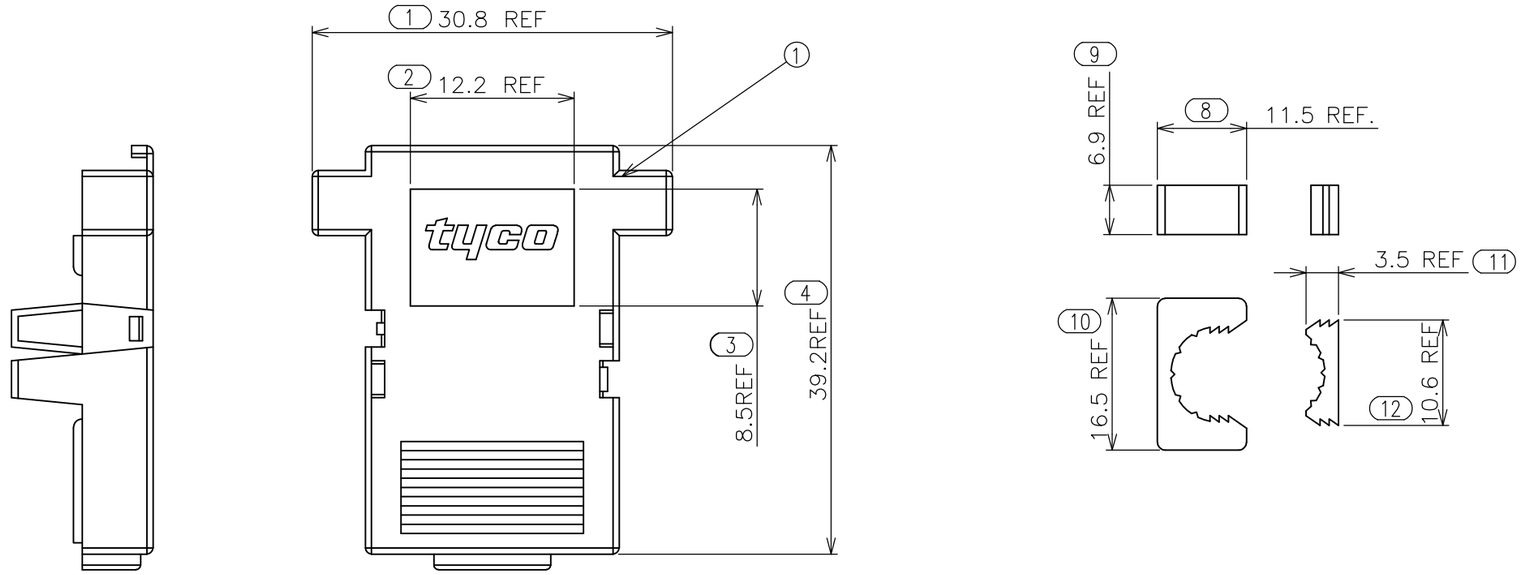

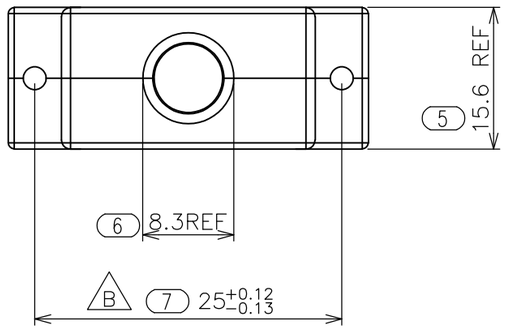

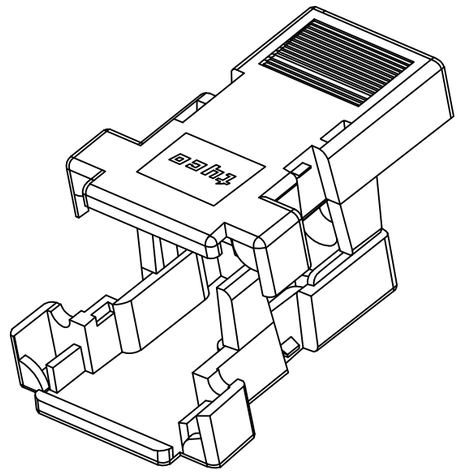

THIS DRAWING IS A CONTROLLED DOCUMENT.

DIMENSIONS: mm

TOLERANCES UNLESS OTHERWISE SPECIFIED:

0 PLC	± –
1 PLC	± 0,3
2 PLC	± 0,2
3 PLC	± –
4 PLC	± –
ANGLES	± 3°

MATERIAL: –

FINISH: –

DWN J.V.D.HEIJDEN 15DEC2006
CHK D.CAMPSCHROER 15DEC2006
APVD T.DE BOER 15DEC2006
PRODUCT SPEC —
APPLICATION SPEC —
WEIGHT —

CUSTOMER DRAWING

Tyco Electronics

Tyco Electronics Corporation
's-Hertogenbosch, Nederland

NAME: SUB-D COVER SINGLE EXIT 9 POSITION

SIZE	CAGE CODE	DRAWING NO	RESTRICTED TO
A3	00779	C-1982208	—

SCALE	SHEET	REV
NTS	1 OF 3	C1

THIS DRAWING IS UNPUBLISHED. RELEASED FOR PUBLICATION -,- .
© COPYRIGHT - BY TYCO ELECTRONICS CORPORATION. ALL INTERNATIONAL RIGHTS RESERVED.

LOC	DIST
H	—

REVISIONS

P	LTR	DESCRIPTION	DATE	DWN	APVD
	-	SEE SHEET 1	-	—	—

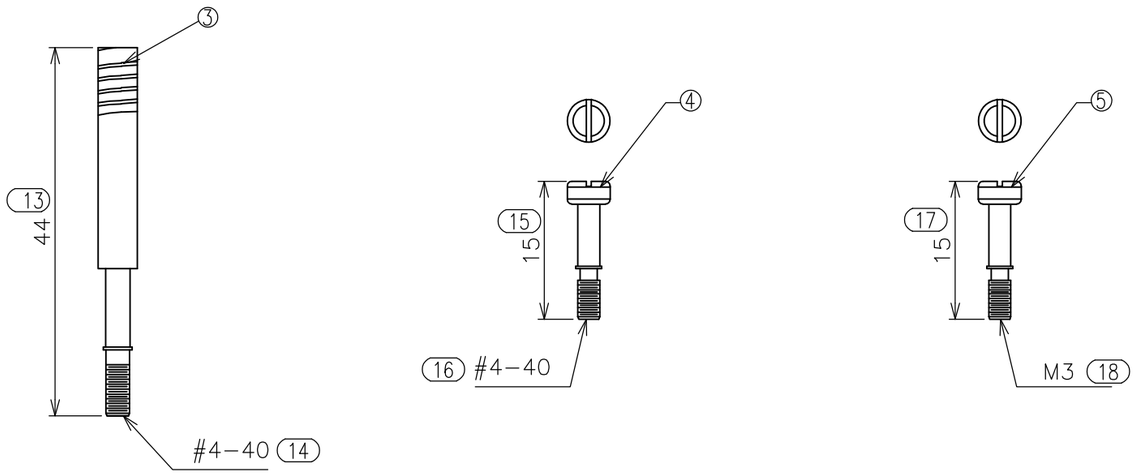

NOTES:
ROHS 2002/95/EC COMPLIANT
1. MATERIAL: SEE TABLE A
2. FINISH: SEE TABLE A
3. NET WEIGHT : SEE TABLE B

TABLE A :

TE PN	9POS	OBSOLETE 1982208-1	1982208-2	1982208-3	OBSOLETE 1982208-4		
ITEM	DESCRIPTION	Q'TY	Q'TY	Q'TY	Q'TY	MATERIAL	FINSH
1	BODY	2	2	2	2	ABS (MAX 0% REGRIND)	30u"MIN NICKELPLATED, 30u"MIN CU UNDERPLATED ALL OVER
2	CLIP	1	1	1	1	ABS (MAX 0% REGRIND)	
3	#4-40 UNC LONG SCREW	0	2	0	0	STEEL	30u"MIN NICKELPLATED, 30u"MIN CU UNDERPLATED ALL OVER
4	#4-40 UNC SHORT SCREW	0	0	2	0	STEEL	30u"MIN NICKELPLATED, 30u"MIN CU UNDERPLATED ALL OVER
5	M3 SHORT SCREW	0	0	0	2	STEEL	30u"MIN NICKELPLATED, 30u"MIN CU UNDERPLATED ALL OVER

THIS DRAWING IS A CONTROLLED DOCUMENT.

DIMENSIONS: mm

TOLERANCES UNLESS OTHERWISE SPECIFIED:
0 PLC ± -
1 PLC ± 0,3
2 PLC ± 0,2
3 PLC ± -
4 PLC ± -
ANGLES ± 3°

MATERIAL -
FINISH -

DWN J.V.D.HEIJDEN 15DEC06
CHK D.CAMPSCHROER 15DEC06
APVD T.DE BOER 15DEC06
PRODUCT SPEC —
APPLICATION SPEC —
WEIGHT —

Tyco Electronics
Tyco Electronics Corporation
's-Hertogenbosch, Nederland

NAME
SUB-D COVER SINGLE EXIT
9 POSITION

SIZE	CAGE CODE	DRAWING NO	RESTRICTED TO
A3	00779	C-1982208	—

CUSTOMER DRAWING
SCALE NTS
SHEET 2 OF 3
REV C1

THIS DRAWING IS UNPUBLISHED. RELEASED FOR PUBLICATION -,- .
© COPYRIGHT - BY TYCO ELECTRONICS CORPORATION. ALL INTERNATIONAL RIGHTS RESERVED.

LOC	DIST
H	—

REVISIONS

P	LTR	DESCRIPTION	DATE	DWN	APVD
	-	SEE SHEET 1	-	—	—

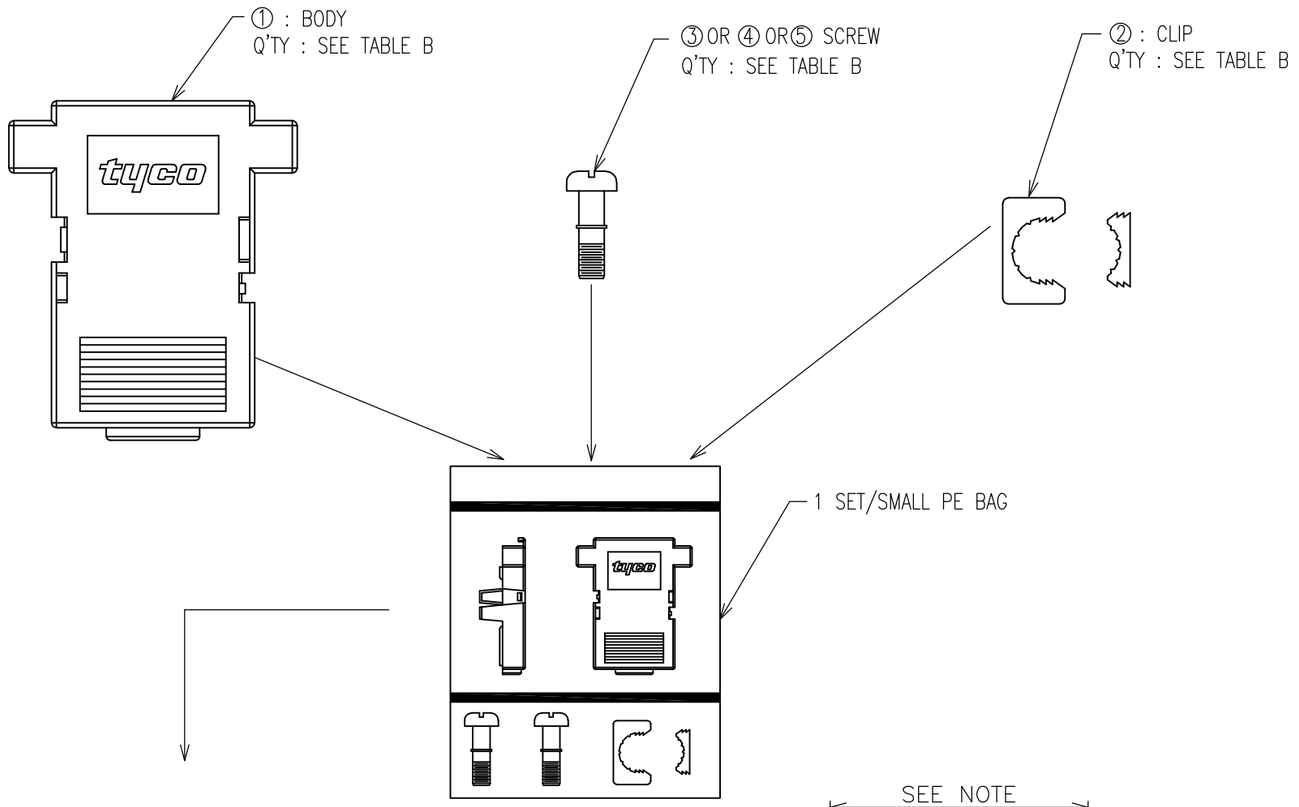

NOTES :

1. DIMENSION:
   CARTON: 9POS 458X351X358mm
2. QUANTITY: SEE TABLE B
3. WEIGHT: SEE TABLE B
4. PACKAGE SPEC REFERENCE TO 107-115

Container No:
Part Number:
Quantity:
Net weight:
Gross weight:
Purchase Order Number:
Country of Origin: Taiwan
Date Code:
REV:
QC PASSED 1

VIEW: A

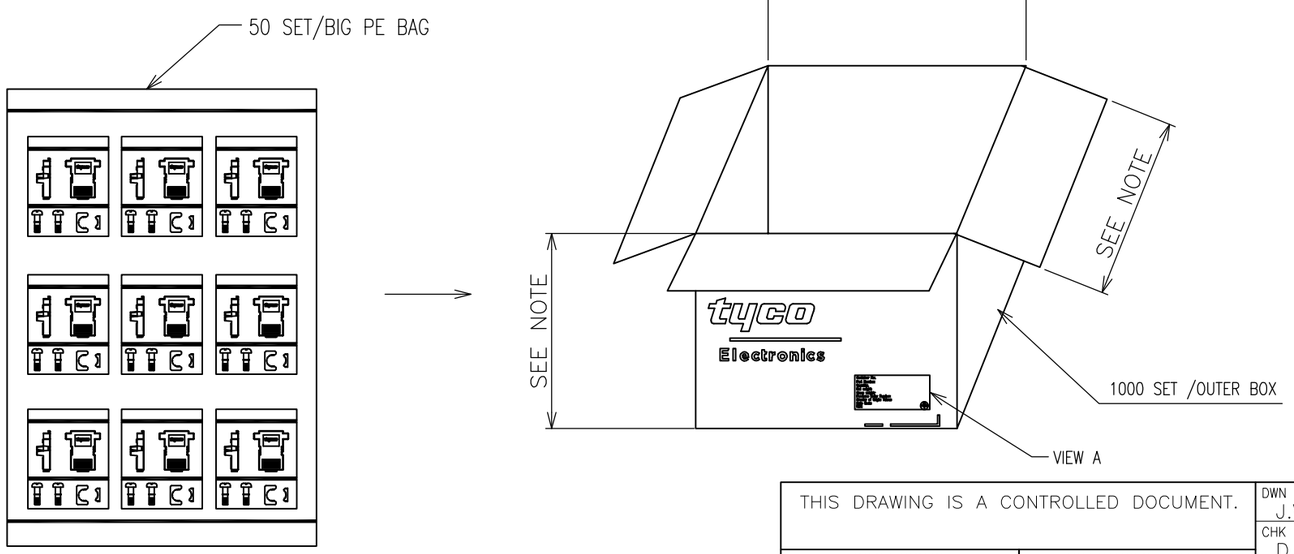

TABLE B:

	TE PN	SET/BAG	PACKAGING QUANTITY/BOX	NW(Kg)	GW(Kg)
OBSOLETE	1982208-1	50	1000 SET/BOX	5	6
	1982208-2	50	1000 SET/BOX	13	14
	1982208-3	50	1000 SET/BOX	7	8
OBSOLETE	1982208-4	50	1000 SET/BOX	7	8

THIS DRAWING IS A CONTROLLED DOCUMENT.

DIMENSIONS: mm

TOLERANCES UNLESS OTHERWISE SPECIFIED:

0 PLC	± -
1 PLC	± 0,3
2 PLC	± 0,2
3 PLC	± -
4 PLC	± -
ANGLES	± 3°

MATERIAL: -

FINISH: -

DWN J.V.D.HEIJDEN 15DEC06
CHK D.CAMPSCHROER 15DEC06
APVD T.DE BOER 15DEC06
PRODUCT SPEC —
APPLICATION SPEC —
WEIGHT —

Tyco Electronics

Tyco Electronics Corporation
's-Hertogenbosch, Nederland

NAME: SUB-D COVER SINGLE EXIT 9 POSITION

SIZE	CAGE CODE	DRAWING NO	RESTRICTED TO
A3	00779	C-1982208	—

CUSTOMER DRAWING

SCALE NTS | SHEET 3 OF 3 | REV C1